DATE	SYM	REVISION RECORD	DR	CK

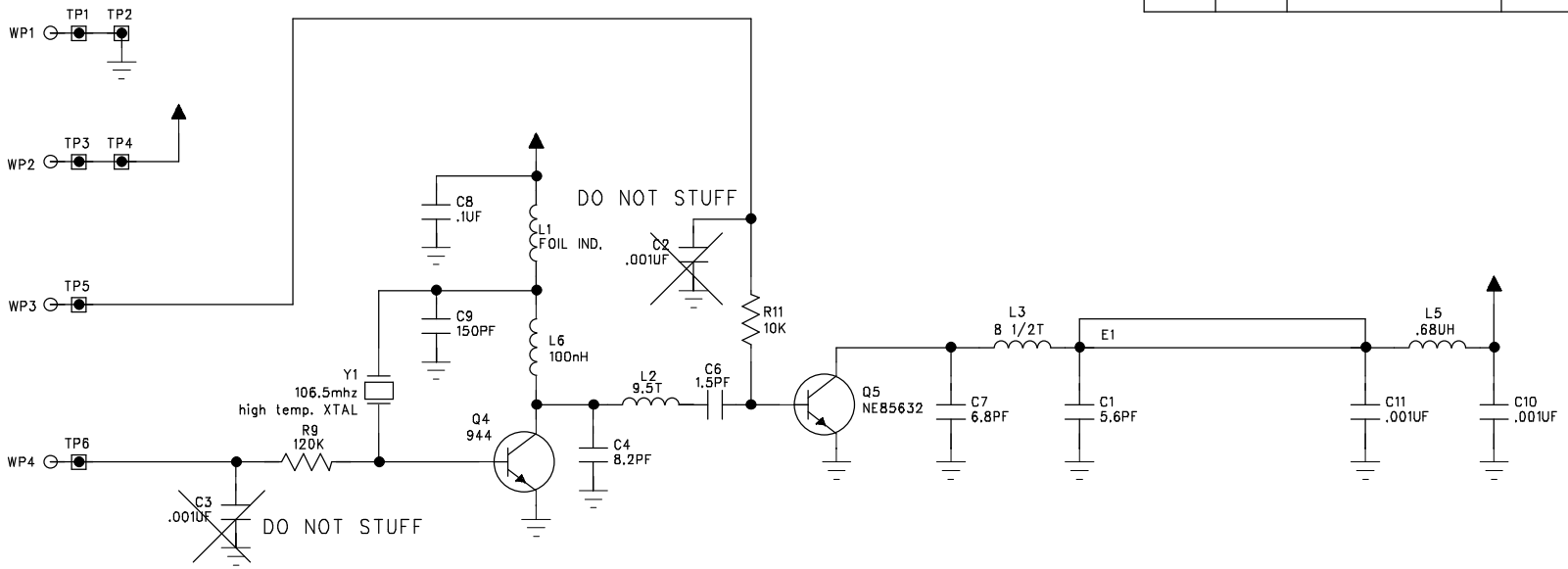

CONFIDENTIAL

✳		✳	DRAWN
			CHECKED
			APPROVED

INTERACTIVE TECHNOLOGIES INC.
2266 NORTH 2ND ST. NORTH ST. PAUL, MN. 55109

DECIMAL TOL.	FINAL ASSEMBLY NUMBER	SCALE	DRAWN BY
	60–	N/A	R
FRACT. TOL.	TITLE		
	560 SERIES 319.5 XTAL SMOKE		
ANGULAR TOL.	DATE	SIZE	PART NUMBER	REV.
	2/22/00		52–773–95	A

REV.	ECO#	DATE	CHANGED BY

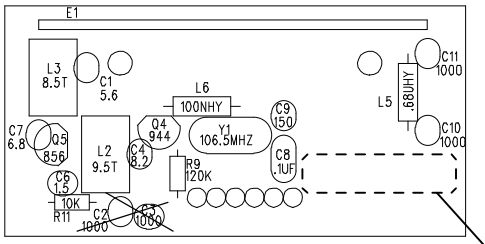

DO NOT STUFF C2, C3.

DATE STAMP LOCATION

NOTES:

1) MAX. FINISHED LEAD LENGTH OF .062".
2) DO NOT CRIMP OR BEND Y1 LEADS.
3) COMPONENTS TO BE MOUNTED AS FLUSH AS POSSIBLE TO BOARD.
4) 56-773 CONTAINS EVERYTHING SHOWN.
4) ALL CAP. VALUES ARE IN PICO FARADS UNLESS OTHERWISE NOTED.

CONFIDENTIAL

DRAWN BY		
CHECKED BY		
APPROVED BY		

ITI INTERACTIVE TECHNOLOGIES INC.

DEC. TOL.	TOP LEVEL ASSY. #	SCALE	DRAWN BY
N/A	60-	2:1	R

FRAC. TOL.	TITLE
N/A	560 SERIES XTAL SMOKE TOP SIDE PPD

ANG. TOL.	DATE	SIZE	PART NUMBER	REV.
N/A	2/18/00	B	57- 773 -95	A