BECKER
AVIONIC SYSTEMS

Transponder

ATC 3401

from Serial No. 2001 upwards

INSTALLATION AND OPERATION

Becker Flugfunkwerk GmbH

Baden Airpark Postfach 34 76549 Hügelsheim

Tel. 07229 / 3050 Fax 07229 / 305217

34-50-07 July 15/97

DV 63803.03
© 1997 by Becker Flugfunkwerk GmbH
All rights reserved

LIST OF EFFECTIVE PAGES

SUBJECT	PAGE	DATE	SUBJECT	PAGE	DATE
Title Page	1	July 15/97			
List of Effective Page	1	July 15/97			
Table of Contents	1	July 15/97			
Introduction	1	July 15/97			
General Description	I-I	July 15/97			
	1-1	July 15/97			
	1-2	July 15/97			
	1-3	July 15/97			
	1-4	July 15/97			
	1-5	July 15/97			
	1-6	July 15/97			
Installation	II-I	July 15/97			
	2-1	July 15/97			
	2-2	July 15/97			
	2-3	July 15/97			
	2-4	July 15/97			
	2-5	July 15/97			
	2-6	July 15/97			
	2-7	July 15/97			
	2-8	July 15/97			
	2-9	July 15/97			
	2-10	July 15/97			
	2-11	July 15/97			
	2-12	July 15/97			
	2-13	July 15/97			
	2-14	July 15/97			
Operation	III-I	July 15/97			
	3-1	July 15/97			
	3-2	July 15/97			
	3-3	July 15/97			
	3-4	July 15/97			
	3-5	July 15/97			
	3-6	July 15/97			
	3-7	July 15/97			
	3-8	Blank			

TABLE OF CONTENTS

	Page
INTRODUCTION	1
GENERAL DESCRIPTION	1-1
INSTALLATION	2-1
OPERATION	3-1

INTRODUCTION

1. General

This component maintenance manual describes the BECKER transponder ATC 3401 from serial No. 2001 upwards.

2. Manufacturing

The transponder ATC 3401 is manufactured and product supported by :

Becker Flugfunkwerk GmbH
Baden Airpark
P.O. Box 34
76549 Hügelsheim

Germany

Telephone: 0 72 29 - 305 - 0
Telex: 78 12 71
Telefax: 0 72 29 - 305 - 217

3. Layout of manual

The manual is divided into three sections. Section 1 contains the general description of the transponder and gives the technical data. Section 2 describes the installation instructions and Section 3 the operation of the unit.

BECKER
AVIONIC SYSTEMS

INSTALLATION AND OPERATION

ATC 3401

Table of contents

GENERAL DESCRIPTION		Page
1.	Application	1-1
2.	General description	1-1
3.	Technical data	1-2
4.	System approvals	1-6
5.	Available models	1-6
6.	Accessories (not contained in the scope of delivery)	1-6

GENERAL DESCRIPTION

1. Application

The ATC 3401 transponder is the airborne component of the ATCRBS (Air Traffic Control Radar Beacon System). It operates on the secondary radar principle and enables the particular ground stations to locate, identify and track aircraft for the purposes of air traffic control. The transponder can also be used to transmit special information to the air traffic controllers (ATC) at the same time.

2. General description

A. The ATC 3401 transponder is constructed as a single module unit designed for installation in the instrument panel or control panel of an aircraft. The dimensions correspond to the ARINC standard for control panels and it is secured in place by means of four DZUS fasteners.

B. All controls are located on the front panel of the unit. The unit connector for connecting the aircraft wiring and the antenna socket are fitted on the back of the transponder.

C. The control panel contains the electrical modules, processor board and display board.

D. The electronic equipment of the transceiver consists of the encoder/power supply module, the receiver/decoder module and the transmitter tube.
The receiver/decoder module can be swung out for servicing, thus making all the components of the transponder readily accessible. The transmitter tube is bolted to the side of the unit frame.

E. The transponder is ready to operate within 30 seconds of switch on. During this period the display test is performed and the transmitter tube is warmed up and stabilized.

F. The following modes are possible with the transponder :

(1) Standby mode (SBY)

(2) ON mode (mode A) where a code set on the transponder is transmitted back in response to interrogation from a ground station.

(3) ALT mode (mode C) where in addition to the facility in mode A the encoded aircraft altitude is also transmitted, provided a coding altimeter is connected to the transponder.

(4) Indication of flight level (altitude/100) if a coding altimeter is connected to the transponder.

(5) Additional identification information whereby the ident button of the transponder is pressed on instructions from the air traffic controller. The identification pulse (SPI pulse) transmitted in this case enables immediate identification of the aircraft on the controller's radar screen, by means of an additional marking on the object display.

(6) Test function by pressing the TEST push-button in which all digits flash in the displays and the reply lamp comes on.

3. Technical data

A. General data

Supply voltage	10.0 V - 32.2 V DC
Current consumption (without panel lighting)	1.5 A at 14 V 0.8 A at 28 V
- in standby mode	0.5 A at 14 V 0.3 A at 28 V
Panel lighting	typ. 480 mA at 14 V typ. 240 mA at 28 V typ. 1.5 A at 5 V
Warm-up time	approx. 30 s
Fuse protection	2 A medium-blow
Operating temperature range	- 20° C bis + 55° C (short-time + 70° C)
Altitude max.	35 000 ft. EUROCAE/RTCA ED-14C/ DO-160C Cat. A1 C1 (no altitude limitation in pressurized aircrafts)
Vibration	EUROCAE/RTCA ED-14C/ DO-160C Cat. M+N (rigid mounted in all aircrafts without limitations)
Environmental conditions	EUROCAE/RTCA ED-14C/DO-160C Env. Cat. [A1C1]-BA(MN)XXXXXX ZBABATAXXX
Weight	1.2 kg
Mechanical dimensions	
Front panel	47.5 x 146 mm (H x W)
Case depth	217 mm above antenna socket
Test and assembly standards	JTSO-C74c Class 1A RTCA DO-150 Cat. B. (cat. A conversion possible)

B. Receiver data

Modes	mode A mode A+C
Receive frequency	1030 MHz ± 0.2 MHz
Sensitivity	- 72 dBm (on 90 % reply rate)
Selectivity	± 15 MHz > 40 dB ± 25 MHz > 60 dB
Dynamic range	≥ 50 dB
Bandwidth	± 3 MHz < 3 dB
Side lobe suppression	3-pulse method

C. Transmitter data

Transmit frequency	1090 MHz ± 3 MHz
Power output	250 W min. at the antenna socket
Reply limitation	effective as from 1200 replies/s
Output impedance	50 Ω
Reply code (mode A)	ICAO coding system with 4096 reply capacity
Altitude code (mode C)	ICAO coding system in 100 ft steps of -1000 to 62700 ft
Transmit pulse shape	pulse width 0.45 µs ± 0.1 µs rise time 0.05 - 0.1 µs fall time 0.05 - 0.2 µs

D. Transponder antenna DMNI 70-1

Frequency range	950 MHz - 1220 MHz
Standing wave ratio (VSWR)	< 1.5 : 1
Impedance	50 Ω
Type	corresponds to λ / 4 rod
Polarization	vertical
Type of radiation	omnidirectional
Peak power output	max. 2 KW
Weight	approx. 113 g

Connection	C socket
DC resistance	Idle (∞)

E. Transponder antenna ANT 2000

Frequency range	1030 MHz - 1090 MHz
Standing wave ratio (VSWR)	< 1.25 : 1
Impedance	50 Ω
Type	corresponds to λ / 4 rod
Polarization	vertical
Radiation	omnidirectional
Connection	BNC socket
Insulation resistance	min. 1000 MΩ
Peak power output	max. 2 KW
Weight	approx. 20 g

F. Transponder antenna CI 100-2

Frequency range	960 MHz - 1220 MHz
Standing wave ratio (VSWR) at 1030 to 1090 MHz	< 1.4 : 1
Standing wave ratio (VSWR) at 960 MHz to 1220 MHz	< 1.6 : 1
Impedance	50 Ω
Type	corresponds to λ / 4-rod
Polarization	vertical
Type of radiation	omnidirectional
Nominally designed for	2.5 mach
Height	66 mm
Weight	approx. 136 g
Connection	TNC connector
Approvals	TSO C66a, C74c, Class A, DO-138
Environmental condition	Env. Cat. AASXXXXXXXXX

G. Environmental conditions

The following performance standards under environmental test conditions were verified in accordance with EUROCAE/RTCA ED-14C/DO-160C.

Environmental condition	ED - 14C DO - 160C	Category	Performance
Temp. and altitude	4.0	A1C1	
Low operating temp.	4.5.1		- 20° C
Low storage temp.			- 55° C
High short-time temp.	4.5.2		+ 70° C
High operating temp.	4.5.3		+ 55° C
High storage temp.			+ 85° C
Altitude	4.6.1		35 000 ft.
Decompression	4.6.2		
Pressure above atmospheric	4.6.3		
Temp. change	5.0	B	
Humidity	6.0	A	48 hrs at 50° C and ≥ 95% air humidity
Shock under:	7.0		
Operating conditions	7.2		6 G/11 ms for the three axes
Crash landing conditions	7.3		Shock : 15 G/11 ms for the three axes Acceleration : 12 G
Vibration	8.0	MN	
Magnetic influence	15.0	Z	Deflection of a compass by 1° at a distance of ≥ 30 cm
Changed supply voltage	16.0	B	
Voltage pulses on the supply voltage	17.0	A	
Low frequency interference voltages	18.0	B	
Induced magnetic and electrical fields	19.0	A	

Environmental condition	ED - 14C DO - 160C	Category	Performance
High frequency interference voltages and interference field	20.0	T	
Unwanted radiation	21.0	A	

4. System approvals

JTS0-2C74c No. 10.930/49JTSO

BZT approval A107416D LB

5. Available models

Transponder ATC 3401 from serial Serial No. 2001 upwards :

ATC 3401-110, black panel, illumination 14/28V P/N.: 511.129-915
ATC 3401-010, black panel, illumination 5V P/N.: 511.137-915
ATC 3401-111, grey panel, illumination 14/28V P/N.: 511.145-915
ATC 3401-011, grey panel, illumination 5V P/N.: 511.153-915

6. Accessories (not contained in the scope of delivery)

Cable socket 25 pol. (crimp version) P/N.: 501.786-954
Cable socket 25 pol. (soldering version) P/N.: 501.824-954
BNC connector for RG 58 C/U P/N.: 725.706-277
BNC connector for RG 213/U P/N.: 709.425-277
Transponder Antenna ANT 2000 (BNC) P/N.: 707.007-952
Transponder Antenna DMNI 70-1 (C) P/N.: 706.991-952
Transponder Antenna CI 100-2 (TNC) P/N.: 501.816-952
BNC antenna connector for RG 58 C/U P/N.: 725.706-277
BNC antenna connector for RG 213/U P/N.: 709.425-277
C antenna connector for RG 58 C/U P/N.: 710.830-277
C antenna connector for RG 213/U P/N.: 710.849-277
TNC antenna connector for RG 58 C/U P/N.: 725.900-277
TNC antenna connector for RG 213/U P/N.: 344.370-277

Table of contents

INSTALLATON		Page
1.	General	2-1
2.	Inspection before installation	2-1
3.	Mechanical configuration	2-3
4.	Aircraft wiring	2-3
5.	Installing the transponder antenna	2-6
6.	Checking after installation	2-6

Fig. 2-1	Test setup	2-8
Fig. 2-2	Dimensions ATC 3401	2-9
Fig. 2-3	Installation of fastener strips	2-10
Fig. 2-4	Dimensions DMNI 70-1	2-11
Fig. 2-5	Dimensions ANT 2000	2-12
Fig. 2-6	Dimensions CI 100-2	2-13
Fig. 2-7	Installation wiring ATC 3401	2-14

INSTALLATION

1. General

Installation of the transponder ATC 3401 depends on the aircraft type and its equipment. Therefore, only general information can be provided in this Section.

2. Inspection before installation

Before the transponder is installed in an aircraft, a visual inspection for possible transport damages shall be performed.

A. Visual inspection

Please look out for the following defects:

(1) Dirt, dents, scratches, corrosion, broken fastening elements on housing and housing parts.

(2) Dirt and scratches on nameplate, front plate and inscriptions.

(3) Dirt, bent or broken pins, cracked insert of unit connector and antenna socket.

(4) Dirt, stiffness and mechanical damage to the pushbuttons, rotary switches and LC displays.

(5) Missing screws.

B. Checking procedure

Connect the transponder to the test setup as shown in Fig. 2-1 and carry out the following tests in the given sequence. Instead of the transponder test set SQUAWK/NAUT I an equivalent test set or a ramp test set can be used.

(1) Checking receiver sensitivity

(a) Set SQUAWK/NAUT I to mode A on and 400 interrogations per second. Note that the amplitude of pulse P 2 is ≤ - 9 dB of pulse P 1.

(b) Note that pulses P 1 and P 3 have equal amplitudes. Set the RF input level to - 72 dB and observe that the transponder replies to at least 90 % of the interrogations.

(c) Set SQUAWK/NAUT I to mode C and repeat test.

(2) Checking side lobe suppression (SLS)

(a) Set SQUAWK/NAUT I to mode A on and 400 interrogations per second.

(b) Set pulses P 1 and P 2 to same amplitude.

(c) Alter the HF input level from - 69 dBm to - 24 dBm, whereby the transponder must reply to not more than 1 % of the interrogation pulses.

(3) Checking reply pulses

(a) Set SQUAWK/NAUT I to mode A at and 400 interrogations per second. Set pulses P 1 and P 3 to - 60 dBm.

(b) Transmit frequency must be 1090 MHz ± 3 MHz.

(c) The output power shall be ≥ 250 W of the antenna terminal.

CAUTION : If RG 58 C/U is used as indicated in the test setup Fig. 2-1, the cable attenuation of app. 1 dB will reduce the output power by app. 50 W.

(d) Pulse spacing between the frame pulses F 1 and F 2 must be 20.3 µs ± 0.1 µs.

(e) The width of a reply pulse must be 0.45 µs ± 0.1 µs.

(f) The necessary spacing between the reply pulses is 1.45 µs ± 0.1 µs.

(4) Checking reply limiting (AOC)

Set SQUAWK/NAUT I to max. interrogation rate at which the transponder must respond with min. 1200 replies/s.

(5) Checking the SPI hold time

(a) Briefly press the IDENT button on the transponder.

(b) For approx. 15 - 30 seconds, the SPI pulse must appear after the last frame pulse F 2 at a spacing of 4.35 µs.

(6) Checking mode A coding

(a) Set code 0000 on the transponder, resulting in only the frame pulses F 1 and F 2 being visible on the oscilloscope.

(b) Set code 7777, this must produce all 12 reply pulses including the frame pulses on the oscilloscope.

(7) Checking mode C coding

If a coding altimeter is connected to the transponder, check with the aid of the MoA Gilham code whether the coded pulse sequence agrees with the measured altitude. If the coding altimeter is not connected to the transponder it transmits in mode C operation the frame pulses only.

3. Mechanical configuration

A. The transponder ATC 3401 is designed for installation aircraft instrument panel or control panel. The dimensions for installation of the transponder are shown in Fig. 2-2.

B. Fitting the fastener strips e.g. on the instrument panel is shown in Fig. 2-3. The transponder is mounted after fitting the fastener strips with the aid of four DZUS fasteners.

4. Aircraft wiring

A. The aircraft wiring of the transponder together with the connection to the encoding altimeter is shown in Fig. 2-7.

CAUTION : The transponder supply lines must not be loomed together with other equipment looms. In addition care must be taken to avoid running all transponder wiring in the close vicinity of ADF or other pulse equipment looms.

B. Pin connections of the unit connector

Connector : P 8

Pin :

1	Ident button	external
2	TX-B (RS 422)	
3	Illumination + 14 V (5 V)	
4	Illumination + 28 V (5 V)	
5	TX-A (RS422)	
6	Switched output +10 . . . 32 V (encoding altimeter)	
7	RX-B (RS 422)	
8	TX-A (RS 422)	
9	FUNCTION ON	external
10	DME/transponder suppression	
11	Supply voltage GND	
12	Supply voltage GND	
13	Supply voltage +10 . . . 32 V DC	
14	Altitude pulse A 4	
15	Altitude pulse A 2	
16	Altitude pulse A 1	
17	Altitude pulse B 1	
18	Altitude pulse B 4	

Pin :

19 Altitude pulse B 2

20 Altitude pulse C 4

21 Altitude pulse C 2

22 Altitude pulse C 1

23 Altitude pulse D 4

24 Altitude encoding GND

25 Supply voltage +10 . . . 32 V DC

C. External IDENT push-button

If this input (Pin 1 of unit connector P8) is briefly connected to GND (e.g. by an external push-button, the IDENT function is started in the same way as with the IDENT push-button on the front panel.

D. DME suppression

If required, connnect the suppression in/out of transponder (pin 10 of unit connector P8) with the corresponding pin of the DME unit with type RG 178 B/U cable.

5. Installing the transponder antenna

A. The transponder antenna is fitted to the underside of the aircraft fuselage at a horizontal, flat location in the longitudinal direction. This location should not be in the "shadow" of aircraft structure items. The highest range is achievied when the antenna is located at the low point on the aircraft fuselage.

B. The installation dimensions of the transponder antennas are shown in Fig. 2-4 to Fig. 2-6.

CAUTION :

- Tranponder antenna DMNI 70-1 is provided with a cork gasket which must be interposed between the skin of the aircraft and the antenna. To mount the antenna use only stainless screws in conjunction with lock washers.
- The transponder antenna ANT 2000 is provided with a silicone rubber gasket which must also be interposed between the skin of the aircraft and the antenna.
- In aircraft having a wooden or plastic airframe an electric counterweight plate or panel must be located within the fuselage at the antenna location with minimum dimension 40 x 40 cm.

(1) Antenna cable

Use type RG 58 C/U coaxial cable when a length of 3 m or less is required. Use type RG 213/U when the length exceeds 3 m.

CAUTION : Keep the antenna cable as short as possible so that as little power is dissipated in the cable as possible.

6. Checking after installation

A. General

After the installation, check the transponder to ensure satisfactory operation of the unit. The transmit frequency is to be checked and to be adjusted if necessary.

B. Checking procedure

Carry out post installation check following the description of section 2./B. utilizing a ramp test set.

C. Test and adjustment of transmit frequency

Set code 0000 on the transponder and mode A interrogation on the ramp test set. Check transmit frequency by means of the ramp test set. Transmit frequency must be 1090 ± 3 MHz. If necessary use special wrench (1/4") loosen trimmnut through the hole in the top cover and adjust transmit frequency by means of the tuning screw.

CAUTION : After adjustment carefully tighten the trimmnut.

D. Pre-flight check using self test

(1) Activate the self test by pressing the TEST push-button (K). All digits in the displays flash and the reply lamp (J) comes on.

(2) The EEPROM will be automatic tested with every write access. A failure is indicated by "EE" in the left display and by "FAIL" in the right display.

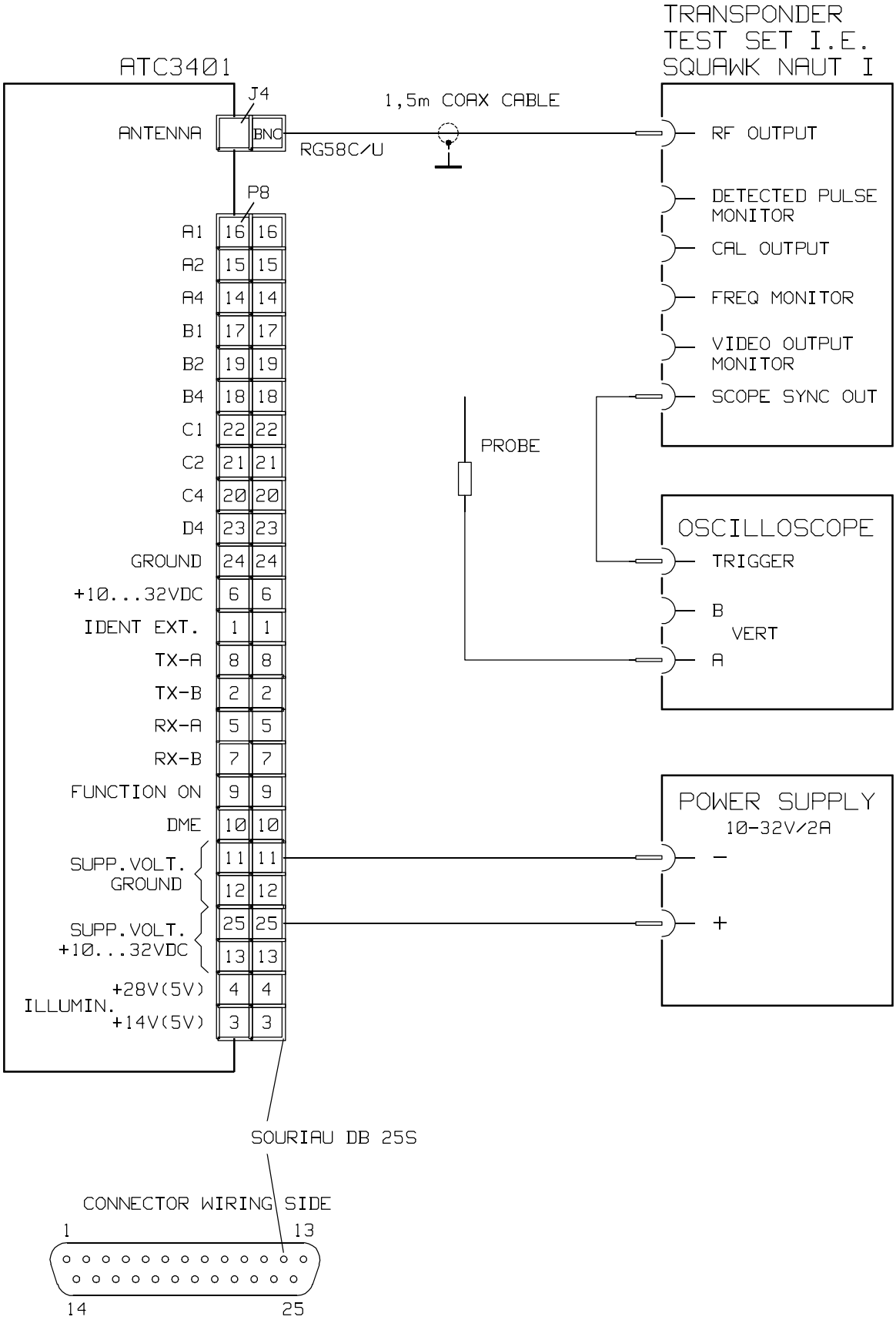

Fig. 2-1 Test setup

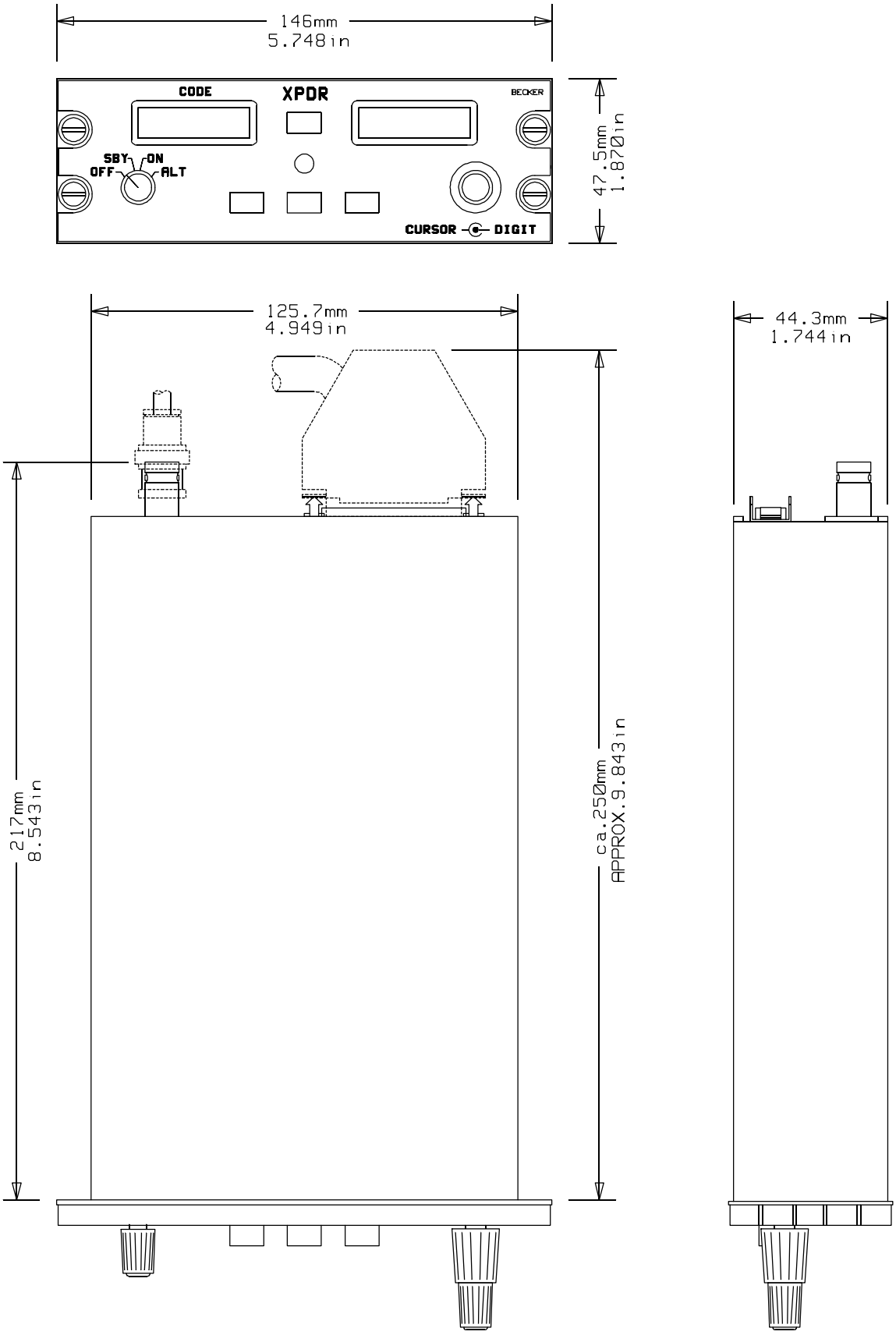

Fig. 2-2 Dimensions ATC 3401

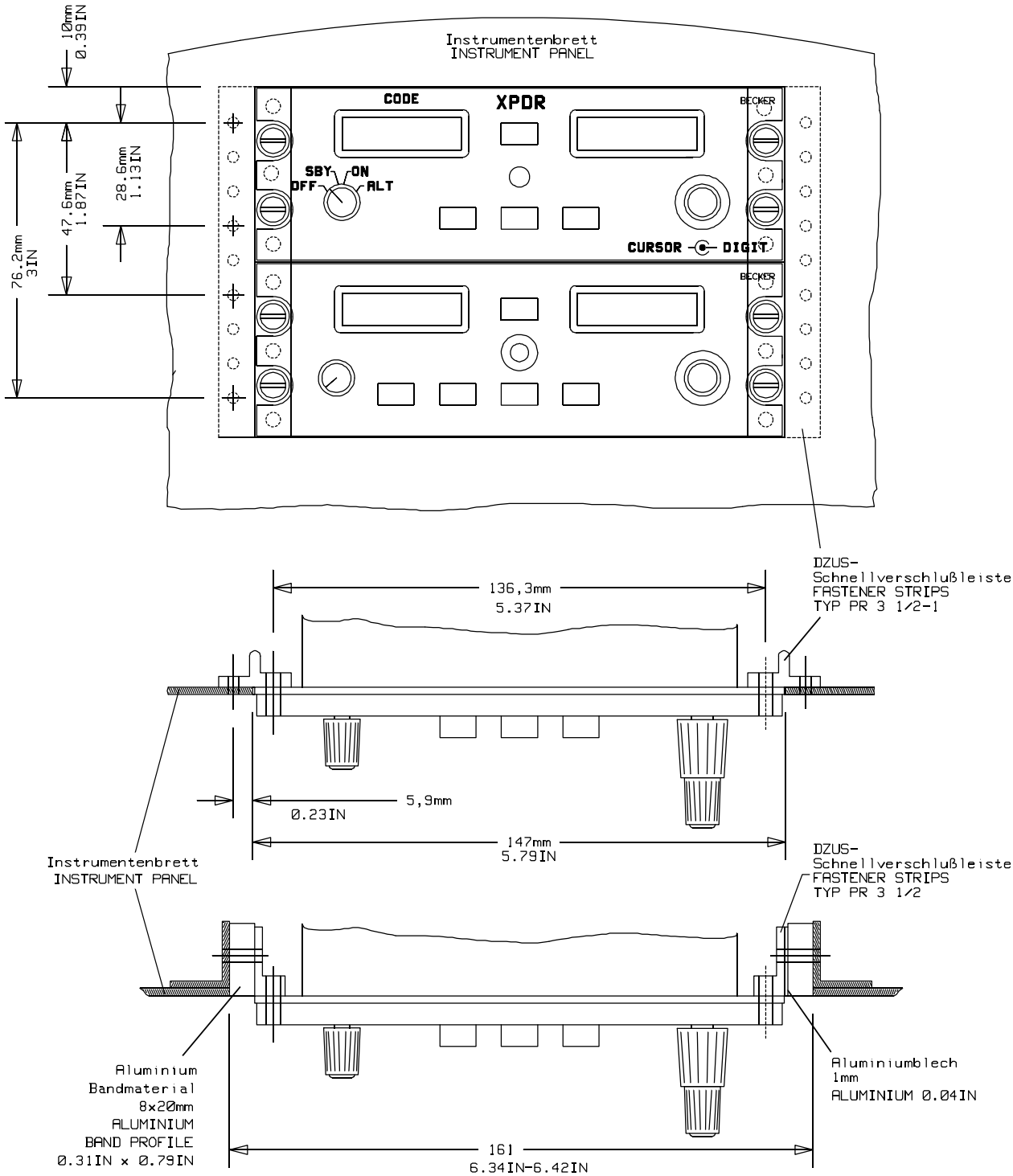

Fig. 2-3 Installation of fastener strips

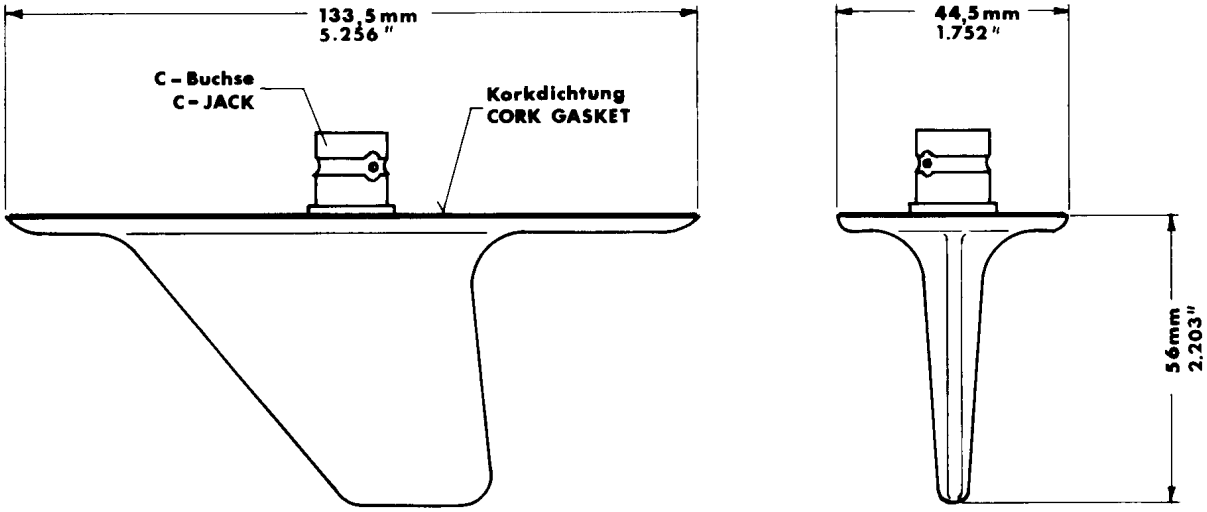

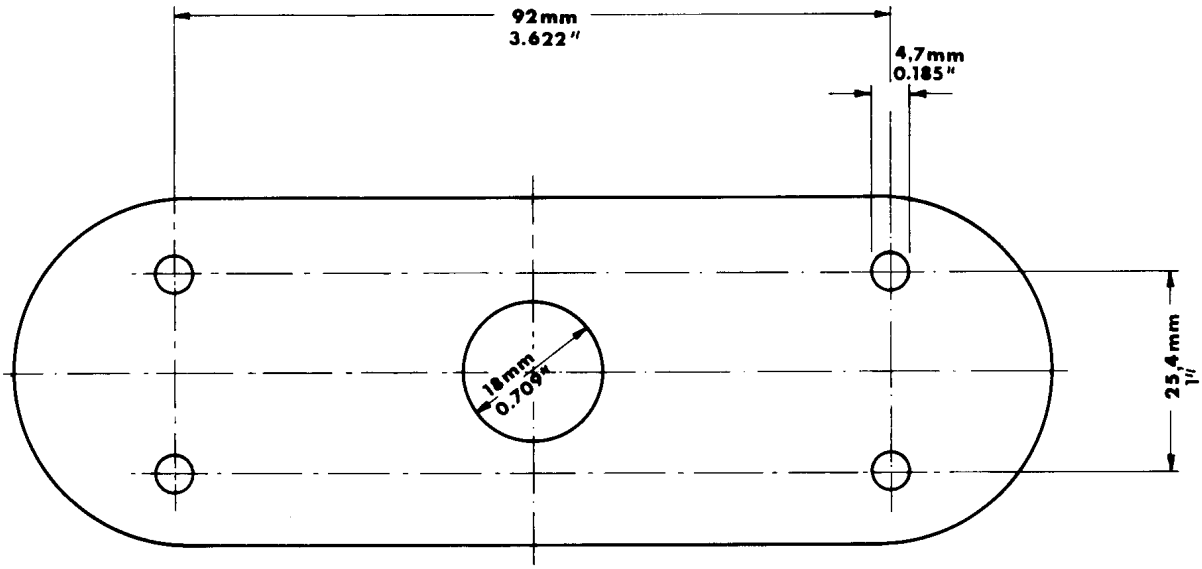

Fig. 2-4 Dimensions DMNI 70-1

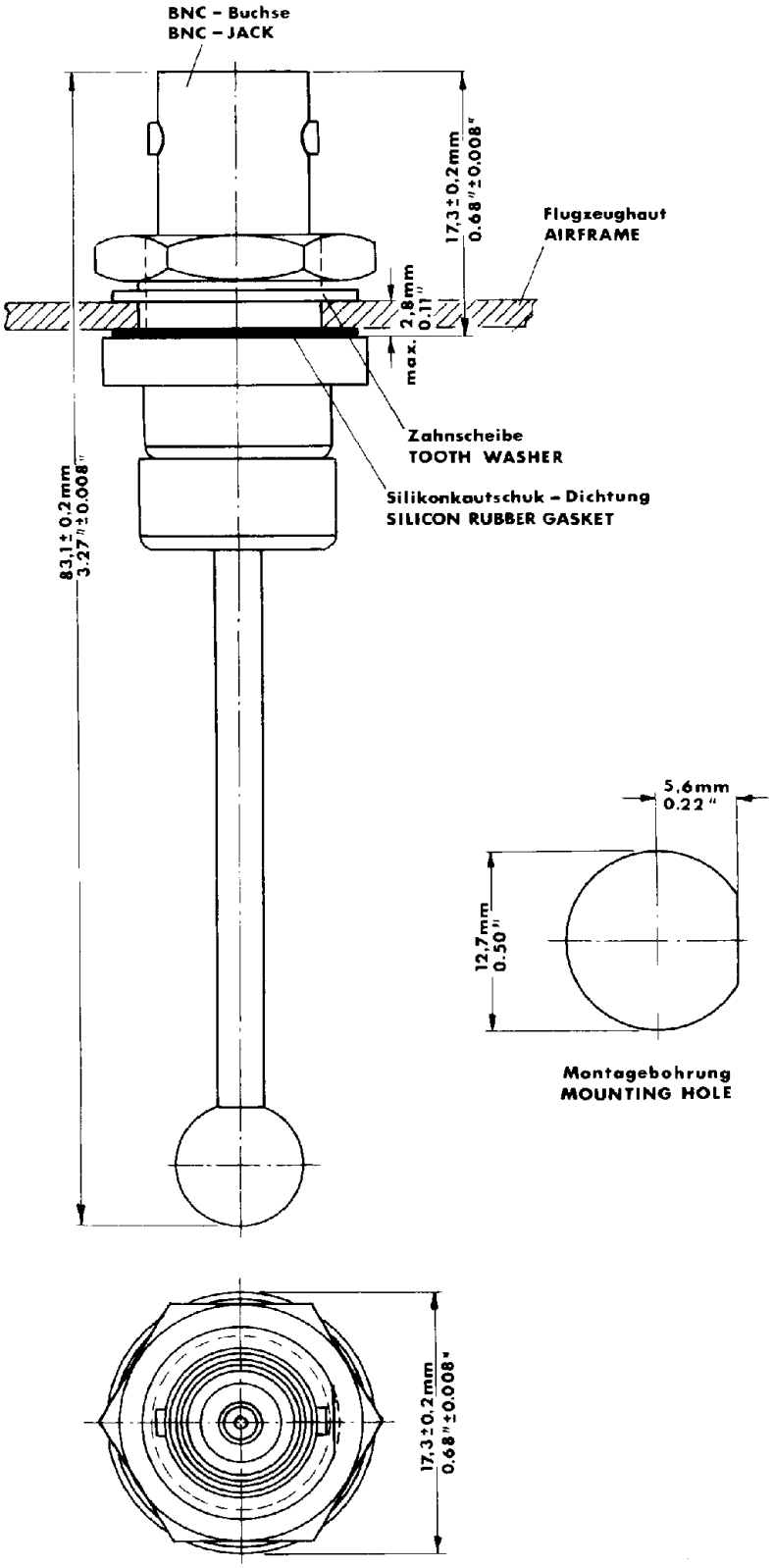

Fig. 2-5 Dimensions ANT 2000

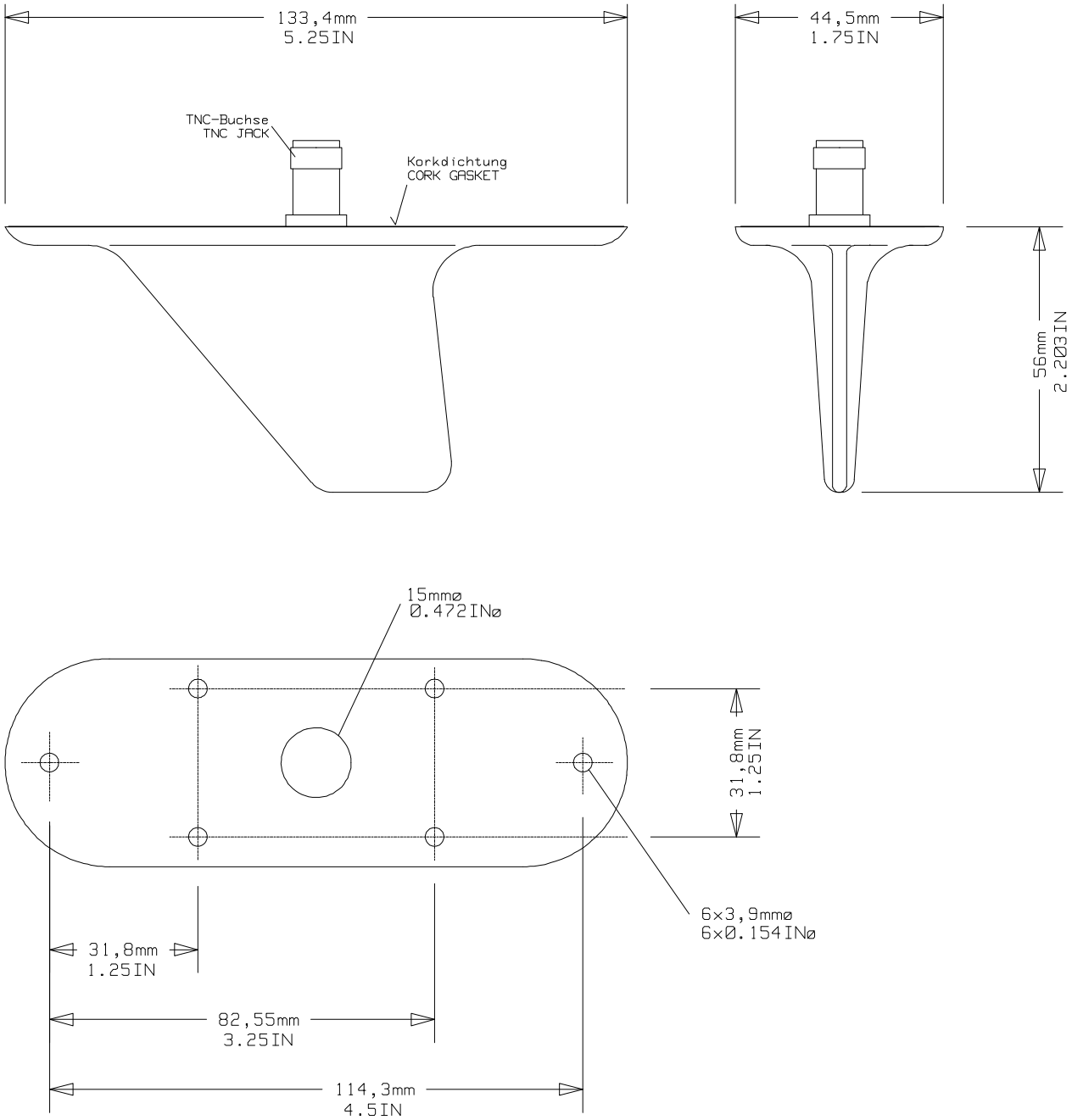

Fig. 2-6 Dimensions CI-100-2

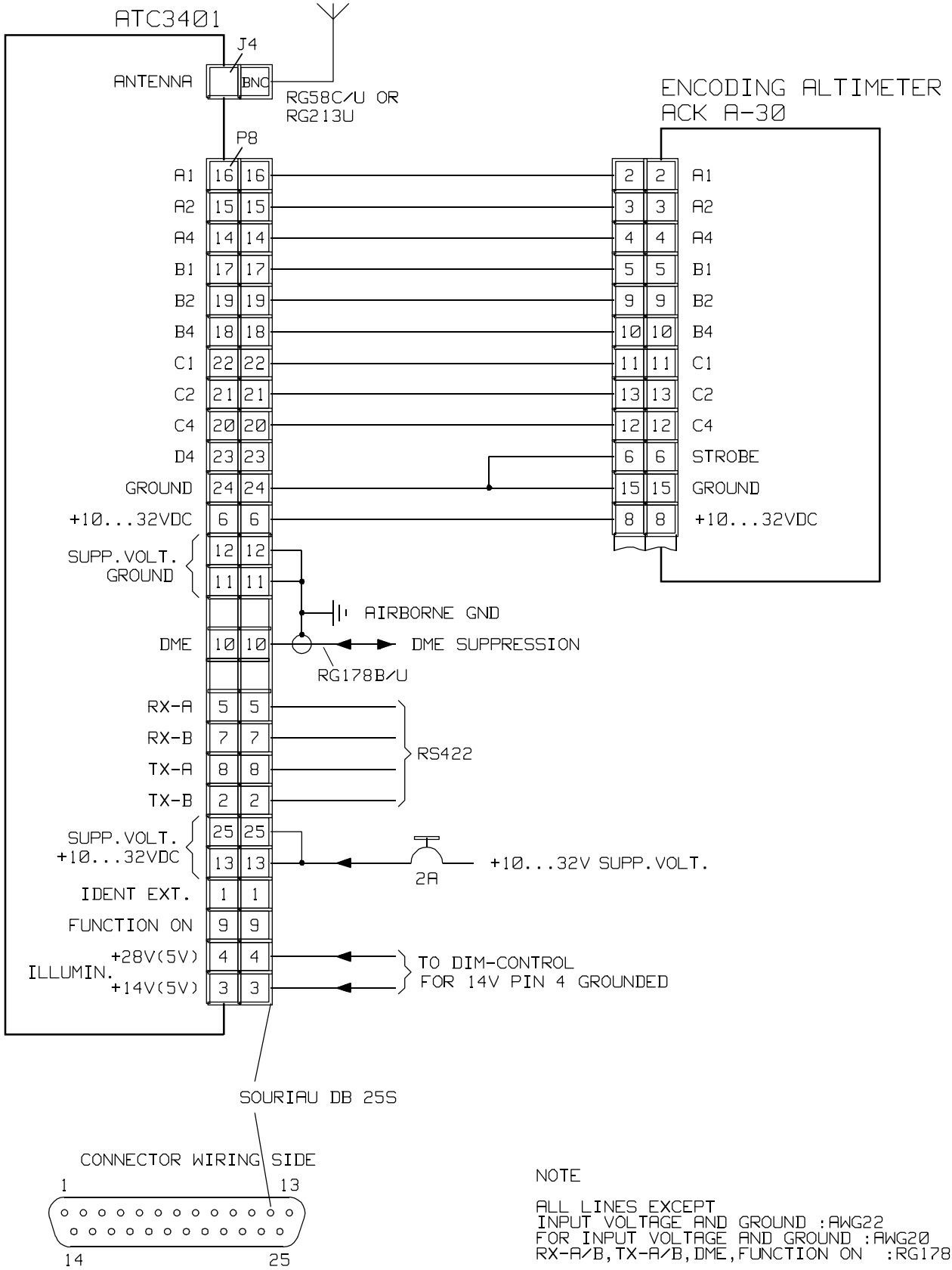

Fig. 2-7 Installation wiring ATC 3401

BECKER
AVIONIC SYSTEMS

INSTALLATION AND OPERATION

ATC 3401

TABLE OF CONTENTS

OPERATION		Page
1.	Controls and indicators	3-1
2.	Funtion of controls and indicators	3-1
3.	Transponder operating instructions	3-2
Fig. 3-1	Front panel of ATC 3401	3-1

OPERATION

1. Controls and indicators

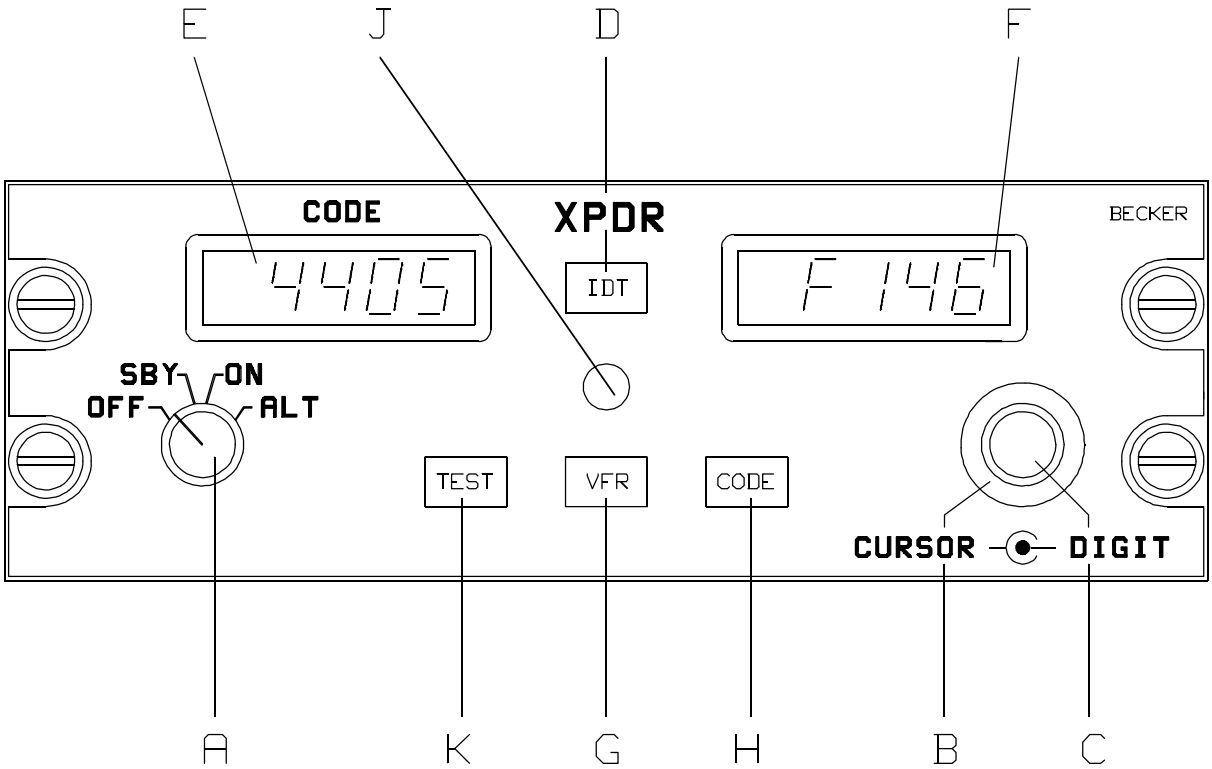

Fig. 3-1 Front panel of ATC 3401

2. Function of controls and indicators

A.	OFF/SBY/ON/ALT rotary mode switch with 4 lock positions	OFF position : Transponder is switched off (exept panel ligthing). SBY position : Standby is switched on. ON position : ON mode (Mode A) is switched on. ALT position : ALT mode (Modes A+C) is switched on.
B.	Rotary coding switch with 8 lock positions, continuously rotable	Control of the cursor in one of the 4 code digits or from the display field.
C.	Rotary coding switch with 8 lock positions, continuously rotable	Setting the code digits from 0 to 7.
D.	Identification push-button IDT	In the ON and ALT modes this triggers the transmission of an identification impulse additional to the Mode A reply code for approximately 25 seconds.

E.	Left LC display	Code indication : Codes from 0000 to 7777 are possible.
F.	Right LC display	Mode indication and flight level indication : SBY mode : "SBY" is displayed. This display flashes during the warm up phase, i.e. for 30 seconds after power on. ON mode : "On" appears in the display. ALT mode : If a valid altitude code is present, the flight level (height in steps of 100 ft) preceded by F (e.g. "F241" = 24100 ft) appears. If no valid altitude code is present, "F " is displayed. "Idt" is displayed for the duration of the identification function.
G.	Code push-button VFR	Activates a user-specific VFR code.
H.	Code push-button CODE	Activates a user-specific transponder reply code.
J.	Reply lamp REPLY	The green LED signals a transponder reply and/or activation of the identification function.
K.	Test push-button TEST	Activates the test function.

3. Transponder operating instructions

A. Switch on the unit (preflight check)

(1) Check that the circuit breaker is set and switch on the aircraft power supply.

WARNING : Do not switch on the transponder if the motors or engines are being started or shut down.

(2) Using the mode switch (A), switch the transponder from OFF to SBY. A display test then follows for 3 seconds.

(3) The transponder is in the warm up phase for 30 seconds after power on. After the display test (3 seconds) has elapsed, "SBY" flashes for 27 seconds in the mode display. The transponder cannot transmit during this time.

(4) After the warm up phase has elapsed, the transponder switches to the mode set on the mode switch (A).

B. Flight operation in the ON mode (transponder reply code only)

(1) The transponder remains switched in the standby mode until requested from the ground station (ATC) to send a code, e.g. "squawk alpha 6426".

(2) Check the code display. Do not set a code with 75XX/76XX/77XX. These codes are reserved for emergencies.

(3) Using the double rotary switch (B,C), set the 4-digit code requested by ATC as follows.

(a) Using switch (B) move the cursor to the particular digit. Digits 0 to 7 can then be set using switch (C).

NOTE : If switch (B) is turned clockwise or counterclockwise, the cursor is moved one position to the left or the right. The cursor appears only in the code display and is indicated by the flashing digit. If no cursor is visible, the first digit flashes after a clockwise rotation and the last digit after a counterclockwise rotation. When the code is being changed in the ON or ALT position, the transponder replies not of incoming interrogations.

The active time of the cursor and the rate of flashing can be changed in the configuration mode.

(b) If the cursor is not moved again within 3 seconds (can be changed in the configuration mode) or if the cursor is moved so far that it can no longer be seen in the display field or if the ident push-button (D) is pressed (in the ON or ALT modes only), the code currently set is switched active.

NOTE : Whilst settings are taking place, the transmission branch of the transponder is inhibited to prevent unintentional transmission.

If only two digits were named by ATC, e.g. "squawk alpha 64", then a zero is to be used for positions three and four, i.e. "6400".

(4) Set mode switch (A) from SBY to ON. The transponder immediately replies with the set code. The green LED signals the transponder replies.

(5) After a "squawk ident" request from ATC, press ident push-button (D) briefly. This transmits an additional, special impulse (SPI) for approximately 25 seconds, which enables the aircraft to be clearly identified on the radar screen of the controller. Idt appears in the right LC display (F) during this time.

(6) The last used code is stored in each case and is also activated when the transponder is switched on.

(7) During the approach, ATC normally gives the instruction "squawk standby". The transponder must then be immediately switched to SBY using mode switch (A), because the high transmission power of the unit can cause disturbance on the radar screen. The transponder remains in the standby mode until a new instruction to transmit is received.

C. Flight operation in the ALT mode (reply code and altitude code)

(1) If ATC requests the transmission "alpha/charlie" or "charlie", switch the transponder to ALT using mode switch (A).

NOTE : This only makes sense if the transponder is connected to a coding altimeter. If not, tell ATC that you do not have a mode C ("mode charlie not available").

(2) The transponder replies using the code set under Section B and in response to mode C requests it transmits the flight level of the aircraft to ATC. The green LED (J) signals the transponder replies.

(3) After "squawk ident" request from ATC, press the ident push-button (D) briefly. This transmits an additional special impulse (SPI) for approximately 25 seconds which enables the aircraft to be clearly identified on the radar screen of ATC. Idt appears in the right LC display (F) during this time.

(4) During the approach, ATC normally gives the instruction "squawk standby". The transponder must then be switched to SBY using mode switch (A), because the high transmission power of the unit can cause disturbance on the radar screen. The Transponder remains in the standby mode until a new request to send is received.

D. Special codings

(1) Two user-specific transponder codes can be stored on the transponder and activated :

Push-button (G) : User-defined VFR code.
Push-button (H) : User-defined transponder code.

(2) Storing a new code.

(a) Set the code to be stored in accordance with Section B.

(b) Press VFR button (G) or CODE button (H) and hold for at least three seconds. The old stored code first appears in the left display (E) and this is followed after three seconds by the new code, which is stored at the same time.

(3) Activation of a stored code

(a) Press the VFR button (G) or CODE button (H). The selected code is then displayed. After 3 seconds, the displayed code becomes active and overwrites the previously-set reply code.

(b) Pressing button (G) or (H) again within 3 seconds reactivates the previously-set reply code (changeable in the configuration mode).

NOTE : When the unit is delivered, the store keys are not assigned a code. This means that if these keys are pressed for 0.5 seconds, "----" is shown in the code display and the transponder then switches back to the previously-active code.

E. Test

(1) The test is activated by pressing the TEST button (K). All digits in the displays flash and the reply lamp (J) comes on.

(2) The EEPROM will be automatic tested with every write access. A failure is indicated by "EE" in the left display and by "FAIL" in the right display.

F. Special codes for air emergencies

(1) Special codes, which depend on the type of emergency, are laid down for certain air emergencies:

- 7500 Hijacking of the aircraft
- 7600 Failure of the radio communications
- 7700 Emergency on the aircraft which poses an immediate danger to the aircraft.

(2) The code evaluation equipment of the radar systems automatically alerts the controller through the radar screen as soon as one of these special codes is received.

(3) An unintentional transmission of an emergency code is prevented in that the transponder responses are inhibited whilst the code is being set.This applies particularly where the new code is being set in the ON or ALT mode. Also if a special code is called up, no transponder reply takes place during the period in which the previous code can be reactivated (approx. 3 seconds).

G. Configuration mode

(1) The configuration mode is used set the unit on the ground by qualified personnel and must not be called up in flight.

(2) The configuration mode is activated as follows.

(a) Press and hold the CODE button (H) and the same time switch mode (A) from OFF to SBY. Await the display test (all digits flashing).

(b) The parameter number can be set in the left display using rotary switch (B) and the parameter value in the right display using rotary switch (C).

(c) The following settings are possible :

P number	Description	Parameter (value)	Procedure
P 01	Reset to factory setting	1 2	No change All parameters to standard (memory blank = "----")
P 02	Delay time for activation of code	2 (standard) 1 (min.) 4 (max.)	
P 03	Cursor active time	3 s (standard) 1 s (min.) 5 s (max.)	
P 04	Delay time for return to previous code	3 s (standard) 0 s (min.) 5 s (max.)	

(3) The reset to the factoring setting (parameter 2) is only active if changed not further parameters (P02 - P04) before storing.

(4) Press TEST button (K) to leave the configuration mode and store the set values. This stores the new parameters and the transponder changes to the mode set by mode switch (A).

(5) To leave the configuration mode without storing, set mode switch (A) to OFF. This switches off the transponder and changes in the configuration mode are not stored.

Example of a unit configuration :

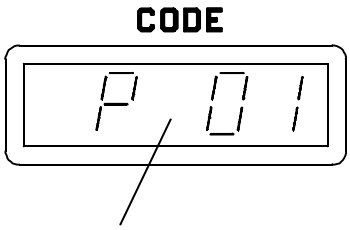

P-NO.(I.E.P 01)

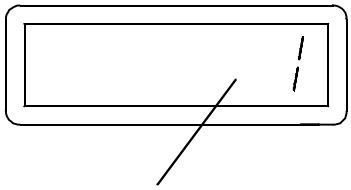

PARAMETER (I.E. 1,NO CHANGE)

H. Safety

- Do not connect the control unit to an a.c. voltage source of more than 32.2 V.d.c.
- Do not connect the control unit to a power source with the polarities incorrect.
- Avoid installing and using the control unit in environmental temperatures below -20°C and over +55°C.
- Switch off the unit when starting or shutting down motors or engines.
- The control unit should be protected from the aircraft system by its own 1 A circuit breaker.
- Do not set a code with 75XX / 76XX / 77XX. These special codes are reserved for emergencies.
- In the ON and ALT modes, the identifcation impulse is transmitted in addition to the reply code for approximately 25 seconds only in response to Mode A requests.

Blank