REVISION RECORD			
LTR	ECO NO:	APPROVED:	DATE:
PD	PRELIMINARY	DDN	6/22/01
A	RELEASED	T.Y.	7/26/01

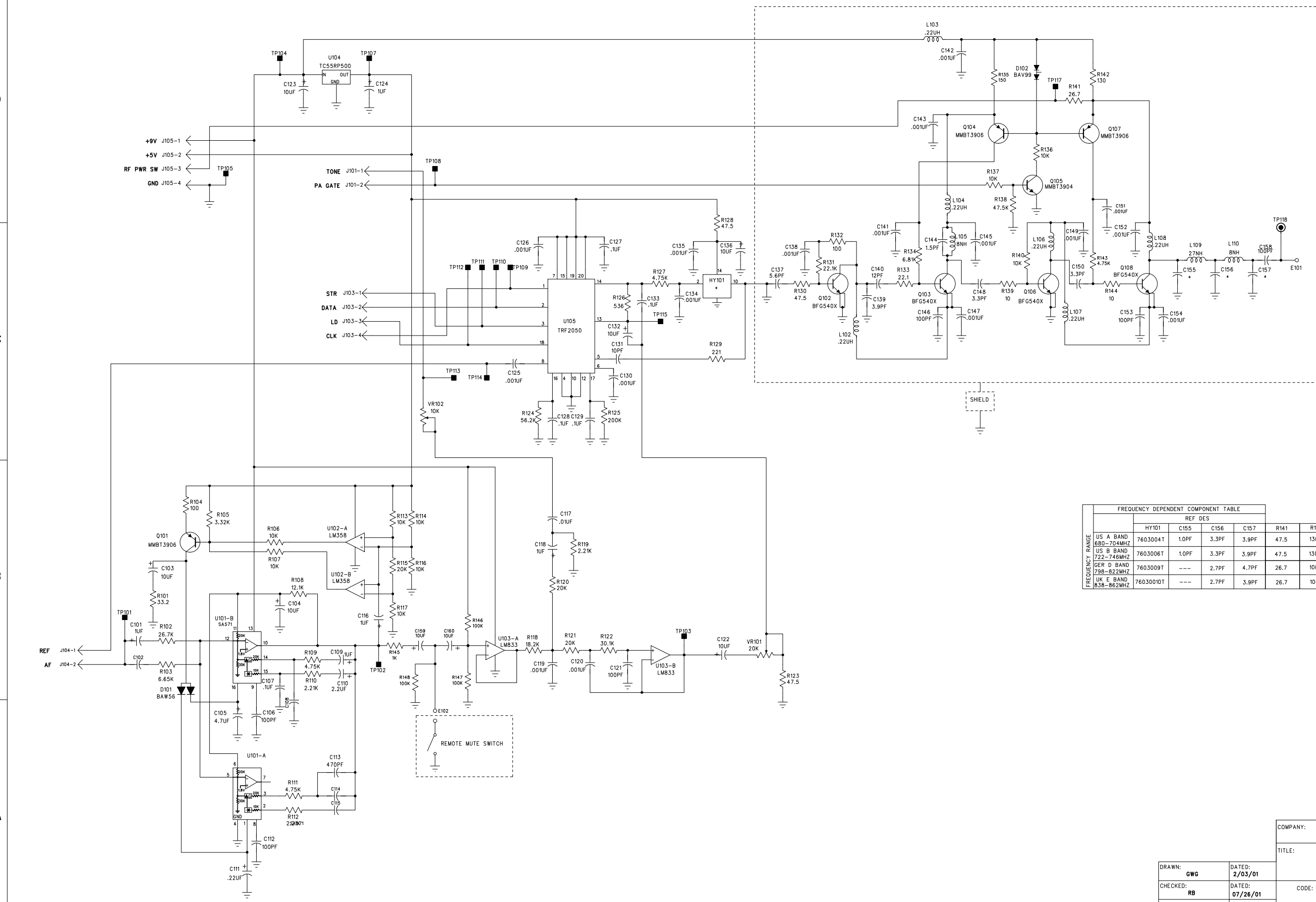

FREQUENCY DEPENDENT COMPONENT TABLE						
	REF DES					
FREQUENCY RANGE	HY101	C155	C156	C157	R141	R142
US A BAND 680–704MHZ	7603004T	1.0PF	3.3PF	3.9PF	47.5	130
US B BAND 722–746MHZ	7603006T	1.0PF	3.3PF	3.9PF	47.5	130
GER D BAND 798–822MHZ	7603009T	---	2.7PF	4.7PF	26.7	100
UK E BAND 838–862MHZ	76030010T	---	2.7PF	3.9PF	26.7	100

COMPANY: TELEX COMMUNICATIONS			
TITLE: SCHEMATIC, ROSE 2 BELT-PACK RF BOARD			
DRAWN: GWG	DATED: 2/03/01	CODE:	SIZE: C
CHECKED: RB	DATED: 07/26/01	DRAWING NO: 770663	REV:
QUALITY CONTROL:	DATED:		
RELEASED:	DATED:	SCALE:	SHEET: OF

REVISION RECORD			
LTR	ECO NO:	APPROVED:	DATE:
PE	PRELIMINARY	DDN	6/25/01
A	RELEASED	TJY	7/27/01

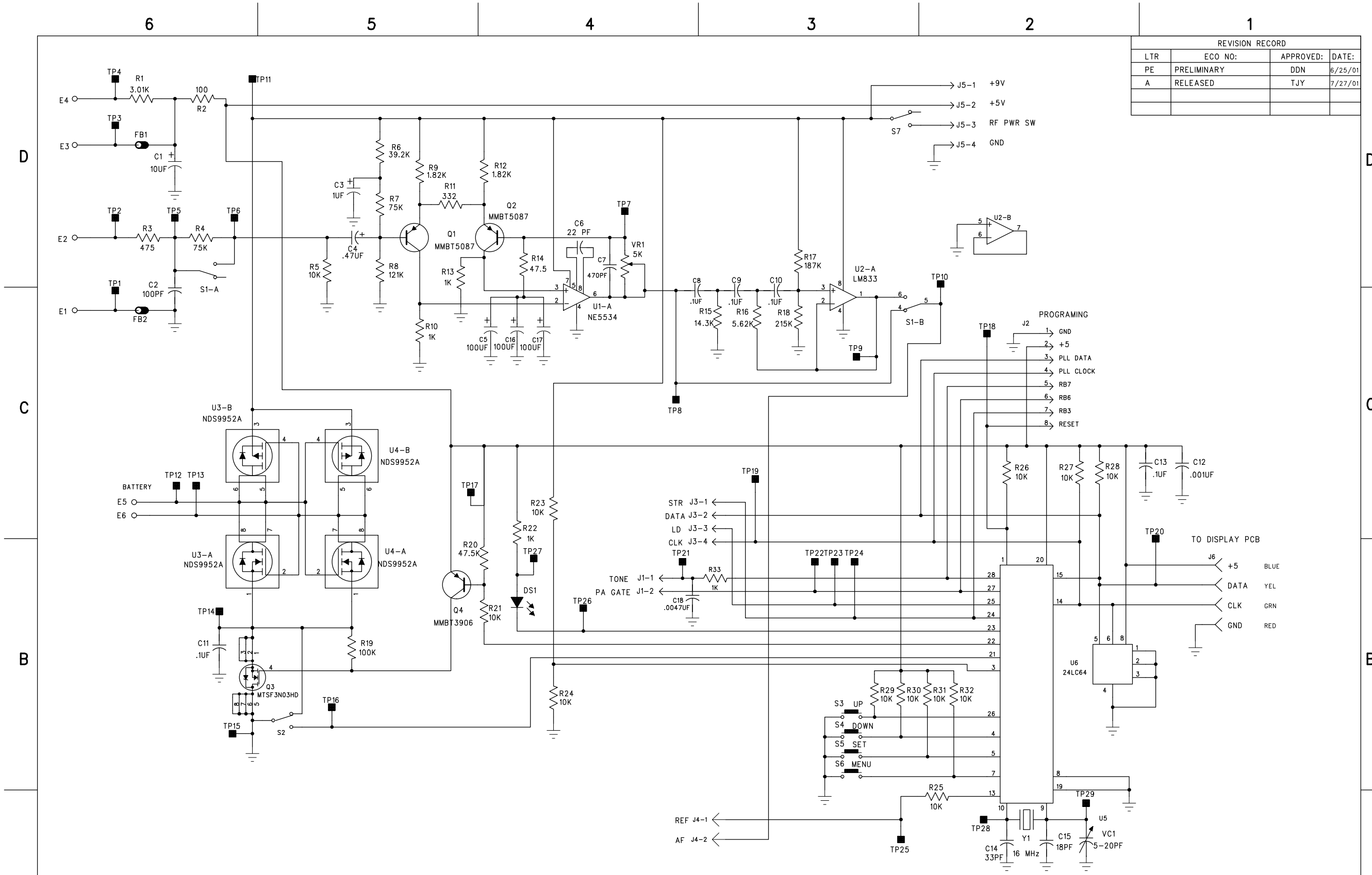

COMPANY:		⊕M1 ⊕M2 ⊕M3 ⊕M4	
TITLE:	SCHEMATIC, ROSE 2 BELT-PACK AUDIO/SWITCH BOARD		
DRAWN: DDN	DATED: 01/28/01	CODE:	SIZE:
CHECKED: TY	DATED: 07/27/01	DRAWING NO: 770664	REV:
QUALITY CONTROL:	DATED:		
RELEASED: RB	DATED: 7/27/01	SCALE:	SHEET: 1 OF 1

770679

REVISION RECORD

ECO NO:	LTR	DESCRIPTION:	DATE:	APPR:
	PA	PRELIMINARY	4/11/01	DDN
07-74-01	A	RELEASED	07/26/01	TJY

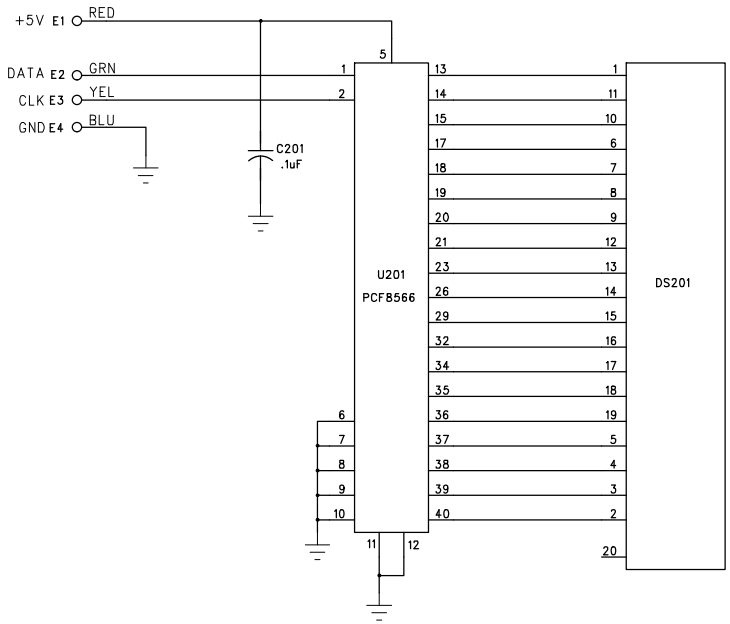

UNSPECIFIED LIMITS OF TOLERANCE
DECIMAL:
.X = +/-.050 IN
.XX = +/-.030 IN
.XXX = +/-.010 IN
ANGLES +/-1°; BENDS +/- 2°
STRAIGHTNESS AND/OR FLATNESS .005 IN/1 IN.
CONCENTRICITY .010 TIR
UNMARKED ANGLES, BENDS AND INTERSECTIONS 90°
THREADS- EXT. CLASS 2A
INT. CLASS 2B
FRACTION:
MACHINED FINISHED- 64

DATED:	07/26/01
DRAWN:	DDN
CHECKED:	TY 07/26/01
APPD:	RB 07/26/01
PROD:	
MATERIAL:	

NEXT ASSY: USED ON:

APPLICATIONS:

TELEX
TELEX COMMUNICATIONS INC.
LINCOLN NEBRASKA U.S.A.

TITLE: Tx BELT PACK DISPLAY

SIZE:	CODE:	DRAWING NO:
B	57010	770679

SCALE: SHEET: 1 OF 1

U202
U201

770679a.sch-1 - Thu Jul 26 14:08:17 2001