3559535770

Chainlift

2020

CHAIN DRIVEN OPENER

TABLE OF CONTENTS

Warranty Information 2
Your Documentation Package 3
Safety Information 4
Safety Features 4
Important Installation Instuctions 4
Pre-Installation Checklist 5-8
Adjustments 9-10
Programming the Remote Control 11
Installing lightbulb and lens. 12
Scheduled Maintenance 13
Troubleshooting Guide 15-16
Wiring Diagram. 17
Parts Lists and Exploded Views. 18-19
Accessories 20

COMPLETE WITH INTELLICODE® REMOTE CONTROL AND SERIES II ELECTRONICS

For 7' 6" Doors. Extension Kit is available for 8' Doors

Included Wall Control MUST be installed prior to Operation of this Garage Door Operator.

Safe-T-Beam® Safety Reverse System Must be Installed and the Force Controls MUST be Properly Set to close door.

This Equipment meets or exceeds all Federal, State and UL 325 Safety Requirements.

Having Difficulty? Need Help?

Please call us: 1-800-35-GENIE (354-3643)
www.geniecompany.com

Please have Model information ready when calling.

SAVE THIS MANUAL FOR FUTURE REFERENCE

The Genie Company Limited Warranty

What is covered?

Any defect in material and product workmanship from personal, normal household use in accordance with the Owner's Manual.

For how long?

MODEL 2020L . . . 10 years on motor, 2 years all other parts.
MODEL 2020C . . . 10 years on motor, 2 years all other parts.

Who gets the warranty?

This warranty is limited to the consumer who originally purchased the product.

Geographic scope:

This warranty applies only to units installed and operated within the country where they were purchased.

Limitations:

IMPLIED WARRANTIES, INCLUDING THOSE OF FITNESS FOR A PARTICULAR PURPOSE AND MERCHANTABILITY (AN UNWRITTEN WARRANTY THAT THE PRODUCT IS FIT FOR ORDINARY USE), ARE LIMITED TO ONE YEAR FROM THE DATE OF PURCHASE. GENIE WILL NOT PAY FOR: LOSS OF TIME; INCONVENIENCE; LOSS OF USE OF YOUR GENIE PRODUCT OR PROPERTY DAMAGE CAUSED BY YOUR GENIE PRODUCT OR ITS FAILURE TO WORK; ANY SPECIAL, INCIDENTAL OR CONSEQUENTIAL DAMAGES; OR ANY DAMAGES RESULTING FROM MISUSE OR MODIFICATION OF YOUR GENIE PRODUCT.

Some states and provinces do not allow limitations on how long an implied warranty lasts or the exclusion of incidental or consequential damages, so the above limitations or exclusions may not apply to you.

This warranty is the only one we will give on your Genie product, and it sets forth all our responsibilities regarding your Genie product. There are no other express warranties.

State and province rights: This warranty gives you specific legal rights, and you may also have other rights which vary from state to state and province to province.

How to get warranty service:

To obtain warranty service for your Genie product, you must provide proof of the date and place of purchase of the product.

1.Do-It-Yourself-Service.

Call the Genie Consumer Connection toll free at 1.800.354.3643 to speak in person to a trained Genie representative for assistance in diagnosing the problem and arranging to supply you with the required parts for do-it-yourself repairs. Trained service representatives are available Monday-Friday, 8:00 a.m. - 11:00 p.m., Eastern Time, and on Saturday, 10:00 a.m. to 7:00 p.m., Eastern Time (subject to holidays) You may also get the information you need at *www.geniecompany.com*.

2.Service From Authorized Dealers.

You also may obtain warranty service from Genie authorized dealers by calling the Genie Consumer Connection at 1.800.654.3643 or by visiting *www.geniecompany.com* before scheduling warranty service. If warranty service is provided by an authorized dealer, Genie will provide all required parts under warranty at no charge to you, but the dealers are independent business people and may render a bench or service call charge for their services. Genie will not reimburse you or otherwise be responsible for those charges.

We suggest that you retain your original packing material in the event we choose to repair or replaqce your Genie Product and request that you ship it to us. Be sure to include your name, address, telephone number, proof of date and place of purchase and a description of the operating problem. After repairing or replacing, your Genie product, we will ship it to your home at no cost to you for parts and labor, but you will have to pay a minimum of $8.00 for shipping and handling charges.

Your choice of either one of the above-described service options is your exclusive remedy under this warranty.

What this warranty does not cover:

This warranty does not cover batteries (which are considered replaceable parts), installation, commercial use, defects resulting from accidents, damage while in transit to our service location or damage resulting from alterations, misuse or abuse, lack of proper maintenance, unauthorized repair or modification of the product, affixing of any attachment not provided with the product, programming of the Remote Control Devices, Safe-T-Beam® adjustment/cleaning, staples through wiring, pinched or broken wires, Carriage disengaged, Force Control adjustments, door out of balance, broken springs or cables, power outages, use of extension cords, missing or damaged parts on discounted, clearanced, final sale or taped cartons, phantom operations (labor is not covered if Opener is functioning properly while technician is in garage),fire, flood, or acts of God, or other failure to follow the Owner's Manual.

FOR ANSWERS: CALL 1.800.354.3643

Please note the following information,so it is available if you need to call us.

Date Purchased _____/_____/_____
Serial Number _____
Operator Model _____
Remote Control Model _____
Dealer Name _____
Dealer Address _____
City _____
State _____
Zip _____

NOTE

Please keep original or photocopy of your sales receipt with this manual for future reference should service ever be required.

Visit Our Website at: *www.geniecompany.com*

SAVE THESE INSTRUCTIONS

Your Genie Garage Door Opener Documentation Package

The documentation provided with your opener has been carefully designed and organized to make the assembly, operation, and continued maintenance of your product as easy and safe as possible. This material consists of two main items.

Operation and Maintenance Manual

While it is recommended that all documents be retained for future reference, this manual should contain most of the information that you will need over the lifetime of your product. The manual is designed in a "flip-flop" configuration with the english version in one half of the book and the spanish / french version in the other half. The basic contents of this manual are:

- Warranty Information
- Pre Installation Checklist to be reviewed prior to any assembly or installation
- Necessary Adjustments
- Programming Remote Devices
- Maintenance and Troubleshooting
- Parts Explosions
- Accessory Order Form
- Door Opener Association Safety and Maintenance Brochure (DASMA)
- Entrapment Warning Label - To be Adhered in close proximity to wall control

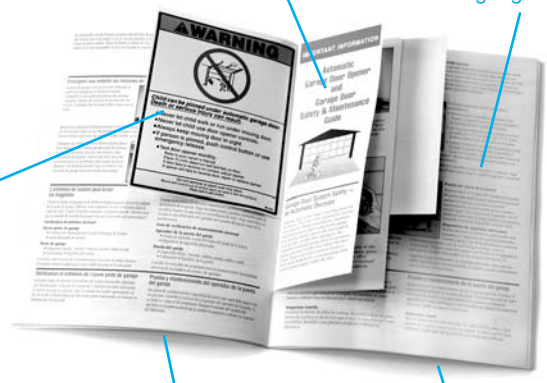

Assembly and Installation Poster

This poster is intended to give a convenient lay flat media to be used at the site of assembly and installation. Color coding is used to make steps and other information as clear as possible. This poster is Tri-Lingual with english instructions highlighted with a blue background. The basic contents of this Poster are:

- Quick Reference Poster
- Pictorial and step by step opener assembly instructions
- Pictorial and step by step opener installation instructions

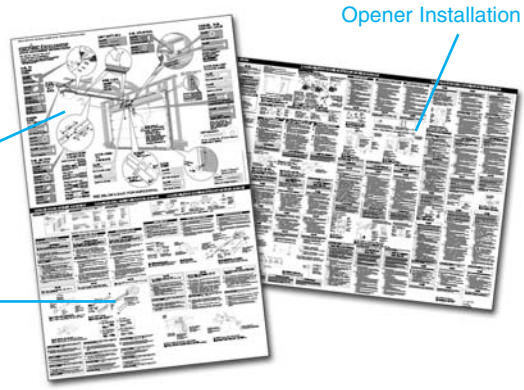

IT IS CRITICAL THAT ALL SAFETY WARNINGS THAT ARE MARKED CLEARLY IN BOTH THE MANUAL AND POSTER ARE READ, UNDERSTOOD AND FOLLOWED.

The GENIE Company is constantly striving to improve our products and the documentation that comes with them. If you have any suggestions or ideas for improving this product and it's documentation, please forward them to:

The Genie Company
22790 Lake Park Blvd.
Alliance, Ohio 44601-3498

SAFETY INFORMATION

OVERVIEW OF POTENTIAL HAZARDS

Overhead doors are large, heavy objects that move with the help of springs under high tension and electric motors. Since moving objects, springs under tension, and electric motors can cause injuries, your safety and the safety of others depend on you reading the information in this manual. If you have questions or do not understand the information presented, call your nearest service representative.

In this section, and those that follow, the words **Danger**, **Warning** and **Caution** are used to emphasize important safety information. The word:

⚠ **DANGER:** indicates an imminently hazardous situation which, if not avoided, will result in death or serious injury.

⚠ **WARNING:** indicates a potentially hazardous situation which, if not avoided, could result in death or serious injury.

⚠ **CAUTION:** indicates a potentially hazardous situation which, if not avoided, may result in injury and property damage.

The word **NOTE** is used to indicate important steps to be followed or important considerations.

POTENTIAL HAZARD	EFFECT	PREVENTION
MOVING DOOR	**WARNING:** Could result in death or serious injury.	• Keep people clear of opening while Door is moving. • **Do Not** allow children to play with the Door Operator. • **Do Not** operate a Door that jams or one that has a broken spring.
ELECTRICAL SHOCK	**WARNING:** Could result in death or serious injury.	• Turn off power before removing operator cover. • When replacing cover, make sure wires are not pinched or near moving parts. • Operator must be properly grounded.
HIGH SPRING TENSION	**WARNING:** Could result in death or serious injury.	• **Do Not** try to remove, repair or adjust springs or anything to which Door spring parts are fastened, such as, wood blocks, steel brackets, cables or other like items. • Repairs and adjustments must be made by a trained door system technician using proper tools and instructions.

Important Installation Instructions

⚠ WARNING:

To reduce the risk of severe injury or death:

1. READ AND FOLLOW ALL SAFETY, INSTALLATION AND OPERATION INSTRUCTIONS. If you have any questions or do not understand an instruction, call your authorized Genie installation professional.
2. **Do Not** install operator on an improperly balanced door. An improperly balanced door could cause severe injury. Repairs and adjustments to cables, spring assembly, and other hardware must be made by a trained service person using proper tools and instructions.
3. Remove all ropes, and disable all locks connected to the door before installing operator.
4. Install door operator 7 feet or more above the floor. Mount the emergency release knob 6 feet above the floor.
5. **Do Not** connect the operator to the source of power until instructed to do so.
6. Locate the control button:
   - Within sight of door.
   - At a minimum height of 5 feet, so small children cannot reach it.
   - Away from all moving parts of the door.
7. Install the entrapment WARNING label next to the wall button or console. Install the emergency release tag on, or next to, the emergency release
8. The operator must reverse when the door contacts a 1-1/2 inch high object on the floor at the center of the doorway. This is about the size of a 2" x 4" board laid flat.

Safety Features

Safe-T-Beam® (STB) Non-Contact Reversing System
Places an invisible beam across door opening, that reverses the door during down travel to the fully open position if anything passes through beam.

Safe-T-Reverse® Contact Reversing System
Automatically stops and reverses a closing door within 2 seconds of contact with an object.

Safe-T-Stop® Timed Reversed System
Automatically opens a closing door, if door does not close within 30 seconds.

ForceGuard® Control
Used to set the force required for opening and closing door. For maximum safety, set the minimum force required to fully open and close door.

Automatic Lighting System
Light bulb up to 100 Watts max., used for safer entries and exits. The light turns on when door is activated and automatically turns off 4.5 minutes later.

Manual Emergency Release
Allows the garage door to be opened or closed manually for emergencies or maintenance.

Pre-Installation Checklist

This Opener includes parts and supplies needed to install in **most** garages and connect to **most** garage doors. There are many variations of garages and garage doors. A few additional parts and supplies may be needed to install Opener into **your** garage and connect to **your** garage door. While checking items listed below, note any additional items you will need.

Tools used in this section:

- 12'+ Tape Measure
- Pencil
- Ladder
- Level

⚠ WARNING:

If your door sticks, binds, or is out of balance, have it adjusted by a Genie Factory Authorized Dealer. Door springs, cables, pulleys, brackets and associated hardware are under extreme tension and can cause serious injury or death.

Check following items before assembling Opener:

Check Step 1: Check Door Condition and Thickness

Check condition of vertical stile in center of door, and its connection to door's top and bottom beams.

A If door frame is nailed together and not a solid connection, door frame must be braced or reinforced before installing Opener.

B If door is "lightweight" (made with frame and skin - not solid), door (including door frame) must be braced or reinforced before installing Opener.

C A door opener reinforcement bracket may also be needed to connect garage door to Opener's Door Bracket. This Opener is designed for installation on a **properly braced** sectional door or **solidly braced** one-piece door.

D Contact your Genie Factory Authorized Dealer or dealer of your garage door for any necessary bracing and a door opener reinforcement bracket (if needed) before proceeding.

E If you have a wooden door, measure door's thickness. (1/4" x 2") Lag Screws are included for installing Door Bracket onto door. If your door is less than 2" thick, brace door or use shorter Door Bracket Lag Screws (1/4" x 1-1/4" – not included)

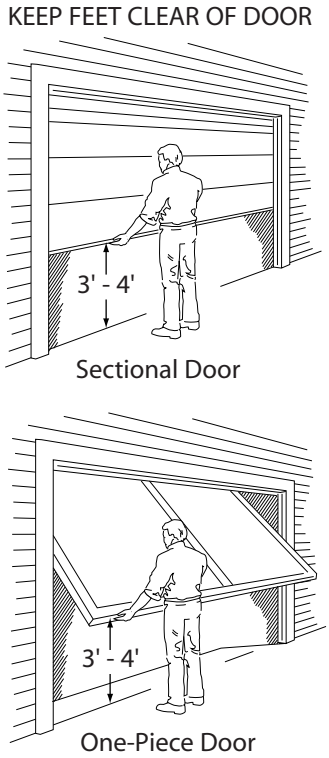

Figure 1 Checking door balance

Check Step 2: Check Garage Door Alignment, Operation, and Balance

A Raise door, check alignment and see if it moves freely (**Figure 1**). If door appears out of alignment, binds, or does not move smoothly, contact a Genie Factory Authorized Dealer or dealer of your garage door for repairs and adjustments to door mechanism.

B Raise door to 3' – 4' above ground and carefully let go. Door should stay stationary. Slight movement is acceptable. More than slight movement means door is out of balance. Contact a Genie Factory Authorized Dealer or dealer of your garage door for repairs and adjustments to door mechanism.

C Check door type. Make a note of whether it is a sectional or a one-piece door (**Figure 2**).

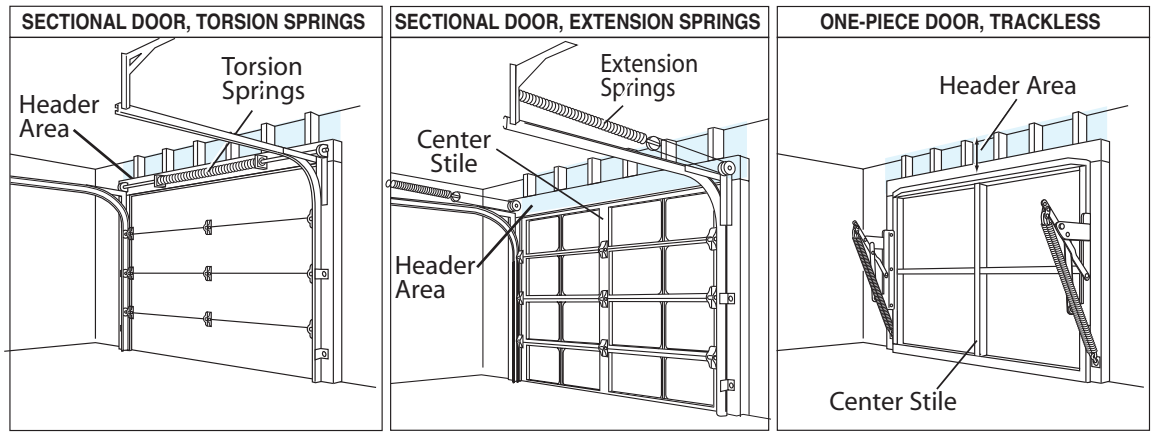

Figure 2 Note Door Type

Check Step 3: Measure Garage Door Height

Measure garage door height (7'-6", 8'-0") with tape measure.

A Make sure your rail is the proper length to open the garage door. If there is any question contact your Customer Service Representative at **1-800-35-GENIE**.

- An Extension Kit is available for 8' doors (**Figure 3**).

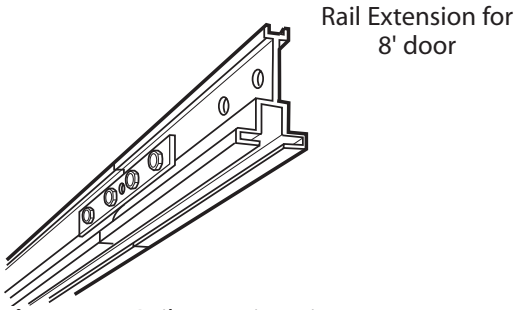

Figure 3 Rail Extension Kit

Check Step 4: Check Door Header Area

NOTE

The header is a heavily reinforced section of the wall just above the top of the garage door opening.

A Find vertical center line of door and header:

- Close door.
- Measure door width at top.
- Mark a point at center of door and on header directly above door. Draw a center line to connect points.

B Find Header Bracket mounting height (Figure 4): (Do not attach Header Bracket).

- Raise door, watching top edge of door and stop door when its edge reaches its highest point.
- Measure distance ("H") from top edge of door to floor.
  - For sectional doors, add 2-1/2" to "H". Mark a point on center line. Bottom of Header Bracket will be installed here.
  - For one-piece doors, add 6" to "H". Mark this point on center line. Bottom of Header Bracket will be installed here.

NOTE

- For both types of doors:
  - If the ceiling in your garage is so low that there is not at least a 3" space above the Header Bracket mounting point, contact a Genie Factory Authorized Dealer.
- If a door spring is in the way, place the Header Bracket avove the spring. **Do Not** move the door spring.

C Check wall for a stud or a solid header at your mark: (If checking a finished wall, a stud finder may be helpful).

- If location is above Header, a 2" x 6" board must be screwed to studs beside your mark with at least two Lag Screws and Flat Washers (not provided).
- Transfer your mark to new mounting board.

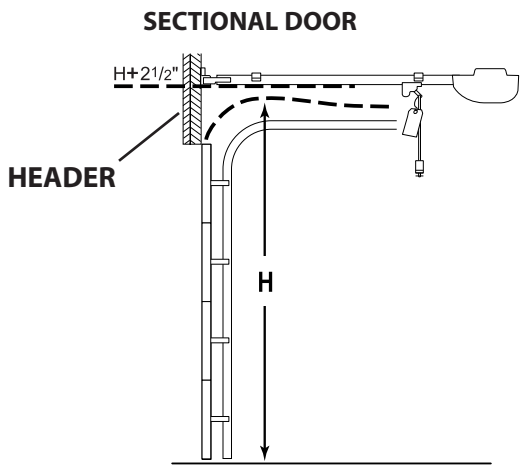

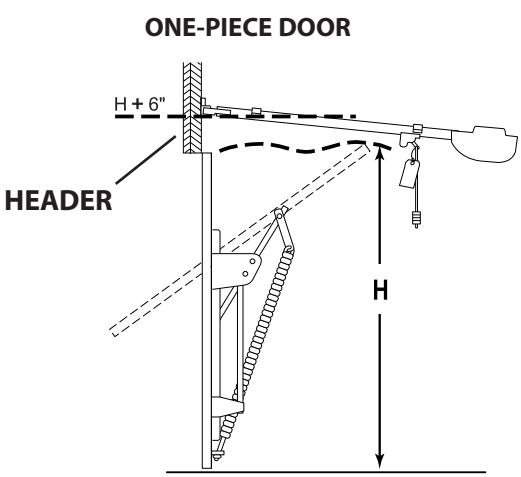

Figure 4 Find Highest Point of Travel

Check Step 5: Check Power Head Mounting Area

Check ceiling or space above where Opener Power Head will be mounted (**Figure 5**):

A Measure from garage door center line mark toward rear of garage:

- Approximately 10' back if garage has a 7' 6" door.
- Approximately 11' back if garage has an 8' 0" door.

B Find location of ceiling joist or truss above where Opener Power Head will be and estimate type and quantity of materials needed for your installation (**Figure 6**).

MOUNTING EXAMPLES

Perforated Angle Iron | Conduit | Wood

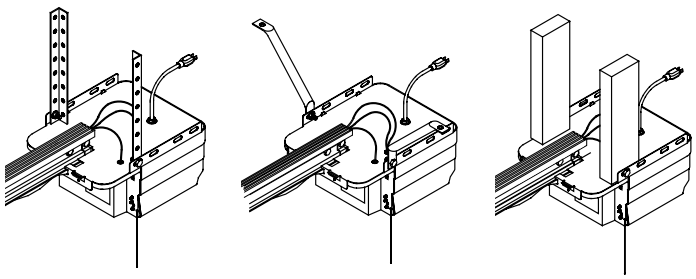

Figure 6 Mounting methods for open beam or finished ceilings

Check Step 6: Check Ceiling for Grounded Power Source

A Check that there is a 15 Amp 120 Volt grounded electrical outlet or grounded permanent wiring box (per building code) within 3' of Opener Power Head:

- If not, an outlet or wiring box must be installed. Contact a licensed electrician for installation.
- If building codes require permanent wiring, Power Head must be partially disassembled to install appropriate wiring in place of Power Cord. See page 19

NOTE

Permanent wiring must be installed by a Licensed Electrician. Not all Genie Factory Authorized Dealers are Licensed Electrician's. Contact someone who is a Licensed Electrician.

CHECK FOR 15 AMP, 120 VOLT GROUNDED OUTLET OR WIRING BOX WITHIN 3 FEET OF THE POWER HEAD.

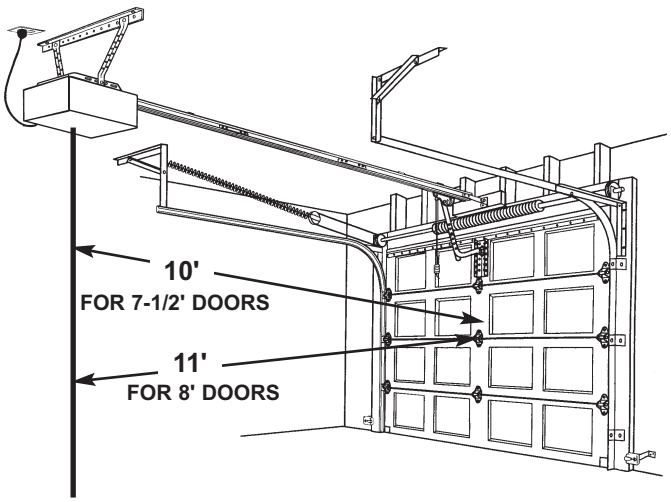

Figure 5 Check Power Head location

Perforated Straps

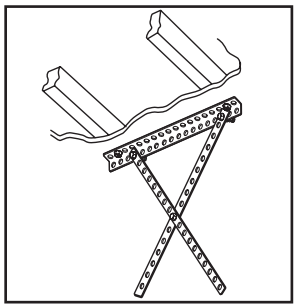

FINISHED CEILINGS
Locate ceiling joists or trusses using a stud finder or similar device.

Attach angle iron (not included) to joists or trusses through finish material using Lag Screws.

OPEN CEILINGS
Straps and angle iron may attach directly to joists or trusses.

Check Step 7: Check Safe-T-Beam® Mounting Bracket Location

Check for wood garage frame, jamb, or masonry at mounting location (6" above floor) with attachment tabs facing away from garage door (**Figure 7**).

A If you cannot mount Safe-T-Beam® Mounting Bracket to wood frame:

- Concrete screws and concrete anchors (not included) must be used to mount Brackets on masonry with attachment tabs facing away from garage door.
- Safe-T-Beam® Mounting Bracket Extensions may be used (not included - available from a Genie Factory Authorized Dealer or through Accessories Order Form on page 20).

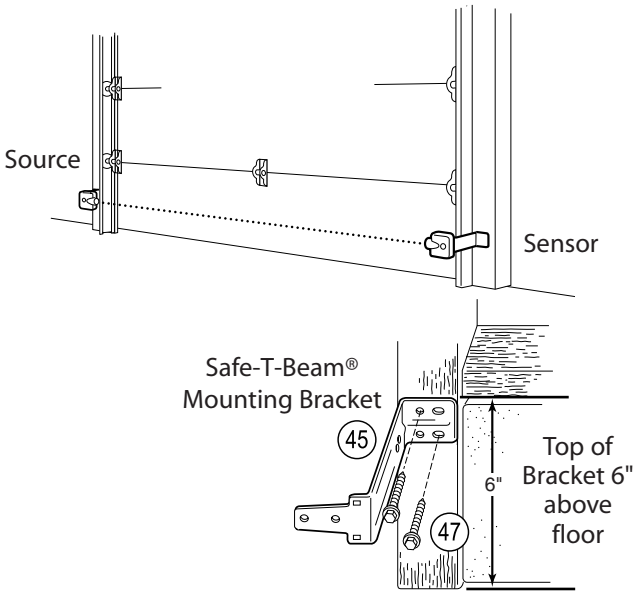

Figure 7 Mounting Safe-T-Beam® Components

Check Step 8: Recommended Tools

A Tools (**Figure 8**):

B Additional tools to make installation easier:

- Slotted and phillips screw-driver bits
- Stud finder
- Sheet-metal cutting snips

Check Step 9: Remove Existing Garage Door Locks

Check that the garage door locks, rope, and T-Handles are removed from the garage door before starting the installation.

A If your garage does not have a separate entry door, it is highly recommended to install a Genie Emergency Release Kit (**GER-2**). Emergency Release Kit lets you open garage door from outside if there is a power failure. (Please see Accessories Order Form on page 20.)

Before going further, get any items and tools needed for your installation

- ❒ Safe-T-Beam® Sensor Mounting Bracket Extensions (dealer)
- ❒ Garage door opener reinforcement bracket (dealer)
- ❒ Garage door frame reinforcement brackets, screws, bracing or reinforcement kits (dealer)
- ❒ Lag Screws (1-1/4") for a wood door less than 2" thick (store)
- ❒ Electrical outlet and/or wiring (supplied by a licensed electrician)
- ❒ Sufficient angle iron or strapping for hanging Power Head (store)
- ❒ 100 Watt light bulb (Rough service bulbs recommended)(store)
- ❒ GER-2 Emergency Release Kit for entry during power failure (store)
- ❒ Wood for header, ceiling, and/or door bracing reinforcement (if needed)
- ❒ Masonry fasteners for Safe-T-Beam® Bracket installation, (if needed)
- ❒ Masonry drill bit (if needed)
- ❒ Extension Kit (for 8' Garage Doors)

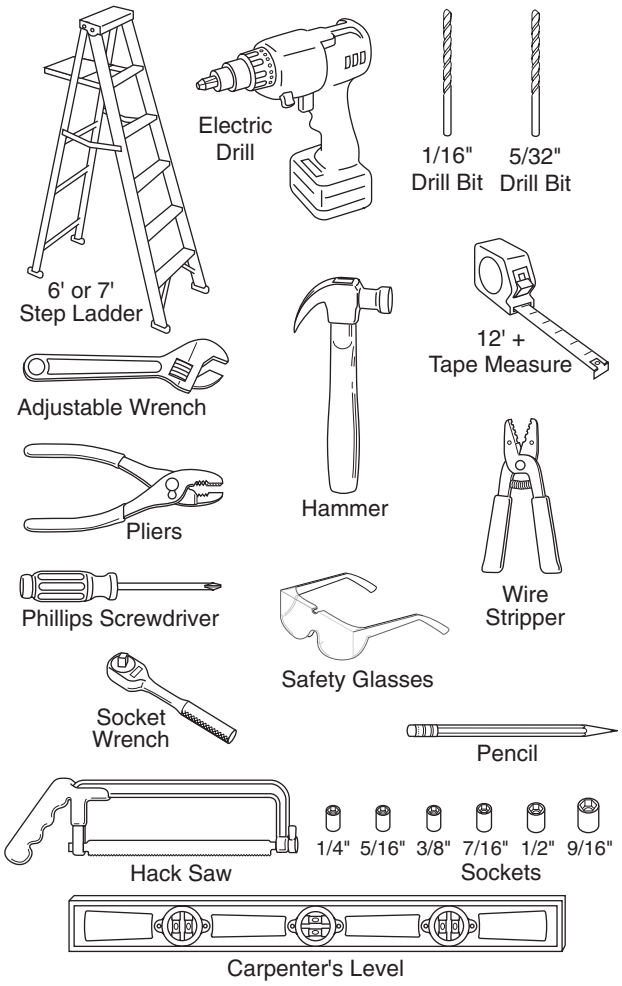

Figure 8 Recommended Tools

Adjustments

Adjustment 1: Set Limit Switches and Force Controls

Coarse Setting of Limit Switches

A Setting Close Limit Switch (**Figure 9**):

- Check that Magnetic Carriage Assembly is disengaged.
- With garage door fully closed, slide Close Limit Switch until it is aligned with Carriage Assembly Magnet.
- Tighten Set Screw. **Do Not** over-tighten.

B Setting Open Limit Switch:

- Manually open garage door to full open position.
- Slide Open Limit Switch until it is aligned with Carriage Assembly Magnet.
- Tighten Set Screw. **Do not** over-tighten.
- Re-engage Magnetic Carriage Assembly.

Setting Force Controls and Final Adjustment of Limit Switches

WARNING

- The garage door opens rapidly, and can cause serious injury or death.
- Keep the path clear.
- Position the ladder to the side of the Power Head so it is clear of all moving parts of the Opener and the door.
- Set the door Opener to use the minimum force needed to open the door.

A CLOSE ADJUSTMENT

- On front panel of Power Head find adjusting screw marked "CLOSE" (**Figure 9**).
- Gently turn screw counterclockwise until it stops.
  - Very little force is required to turn adjusting screw.
- Press Wall Console to close garage door.
  - Observe if door stops at "CLOSE" limit switch. If door is fully closed—adjustment is finished. Go to "OPEN" Adjustment.
  - If door stops but is not fully closed,
    a. Measure distance between bottom of door and floor.
    b. Move "CLOSE" Limit Switch that same distance toward door.
  - If door stops and/or reverses before reaching the "CLOSE" Limit Switch
    a. Slightly increase CLOSE Force setting (clockwise).
  - If door reverses after contacting floor, move Limit Switch toward Power Head.
  - If door fails to move, check Safe-T-Beam® System. See Troubleshooting Section, pages 15 and 16.

Open adjustment next page.

NOTE

- Little effort is required to turn the Force Adjusting Knobs.
- If the door stops moving while opening or closing, adjust the Open Force or Close Force Controls **slightly** clockwise (to **slightly** increase the force) and retry the step.
- The Open Force and Close Force Controls are to be set to the **minimum** force necessary to ensure the door smoothly opens and closes completely.
- Ensure the Carriage Assembly is engaged and is between the two Limit Switches before operating the Opener.

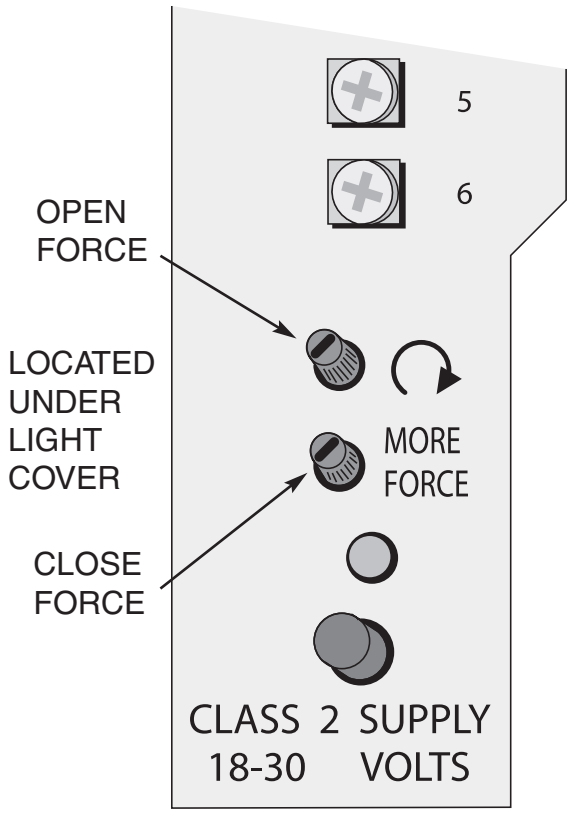

Figure 9 Making Force Adjustments (Located Lower Right Corner).

Setting Force Controls and Final Adjustment of Limit Switches (continued)

WARNING

- The garage door opens rapidly, and can cause serious injury or death.
- Keep the path clear.
- Position the ladder to the side of the Power Head so it is clear of all moving parts of the Opener and the door.
- Set the door Opener to use the minimum force needed to open the door.

B OPEN ADJUSTMENT

- On front panel of Power Head find adjusting screw marked "OPEN" (**Figure 9**).
- Gently turn screw counterclockwise until it stops.
  - Very little force is required to turn adjusting screw.
- Press Wall Console to open garage door.
  - Observe if door stops at "OPEN" limit switch. If door is fully open—adjustment is finished.
  - If door stops but is not fully open,
    a. Measure distance between bottom of door and top of door opening.
    b. Move "OPEN" Limit Switch that same distance toward Power Head.
  - If door stops before reaching the "OPEN" Limit Switch
    a. Slightly increase OPEN Force setting (clockwise).
  - If door fails to move, see Troubleshooting Section, pages 15 & 16.

C Run Door Opener

- Cycle opener a few times to double check settings. Repeat adjustment steps as necessary.

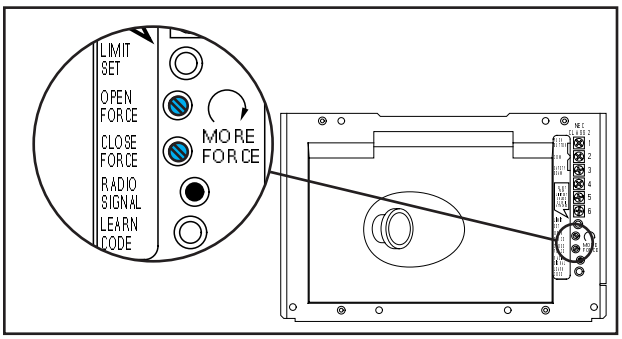

Figure 9 Locate controls

NOTE

The door must contact the 2" x 4" board before the Carriage activates the Close Limit Switch. If not, readjust the Close Limit Switch.

ADJUSTMENT 2: SETTING CONTACT REVERSE FUNCTION

NOTE

Limit Switch and Force Adjustments must be completed before checking the contact reverse function (**Figure 10**).

A Open garage door using Wall Console.

B Lay a 2" x 4" board flat in center of doorway.

C Close door using Wall Console.

D Check that door stops and reverses within 2 seconds after it contacts board:

- If door does not reverse, decrease Close Force until door reverses.
- If door still does not reverse, move Limit Switch toward door.

E Check Safe-T-Beam® System operation:

- If beam is blocked, door will not close.

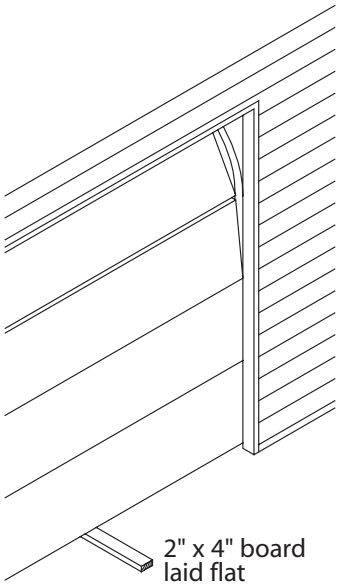

Figure 10 Checking Contact Reverse

Accessories

Programming 1: Programming the Remote Control

A To program one Button of a Remote Control (**Figure 11 and 12**):

- Locate Learn Button and Learn Indicator Light near Terminal Block on Power Head (**Figure 13**).
- Press and release Learn Button. Red Learn Indicator Light will blink 2 times per second.
- Press Remote Control Button once within 30 seconds. Red Learn Indicator Light will stay lit.
- Press Remote Control Button again. Red Learn Indicator Light will go out, indicating that memory is stored.
- Press again to Activate Unit.

B Program each additional Remote using step **A** above.

To Erase All Remotes from Power Head Memory

A Press and hold Learn Button on Power Head for 10 seconds or until Learn Indicator Light goes out. Memory is erased:

- Program Remotes again as needed.

To Replace Remote Control Battery

A Push in on Battery Cover Latch at base of Remote Control.

- Use coin, pen, screwdriver or any similar device.
  – Cover snaps open.
- Replace old Battery with new compatable coin type battery.

B Snap Battery Cover closed.

WARNING

A moving garage door may cause serious injury or death.

- Keep people clear of opening while door is moving.
- **Do not** allow children to play with the Remote Controls.

If the Safety Reverse does not work properly:

- Close the door and disconnect the Opener using the Emergency Release Cord.
- **Do not** use the door Opener, Remote Controls, or Wireless Keypad.
- Refer to the door and door Opener Owner's Manuals before attempting any repairs.

Remote Control Operation

A Press Button on Remote Control. Garage door will move.

B Press Button again. Garage door will stop:

- The door automatically stops at the end of the open or close cycle.

C Press Button again. Garage door will reverse.

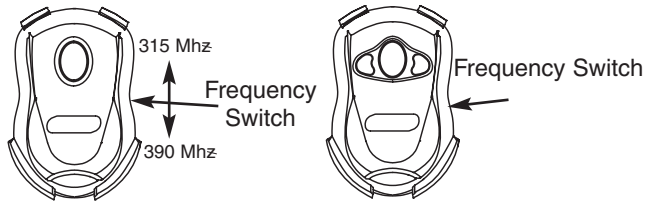

1 Button Compact Remote w/Docking Station

3 Button Compact Remote w/Docking Station

Figure 11 Genie Remote Controls

Remote Control Operation Continued

D Some Remote Controls are equipped with a flashlight. The Genie logo is the button which operates the light. There is a backlight under the button. When it does not light, it indicates the battery needs replaced.

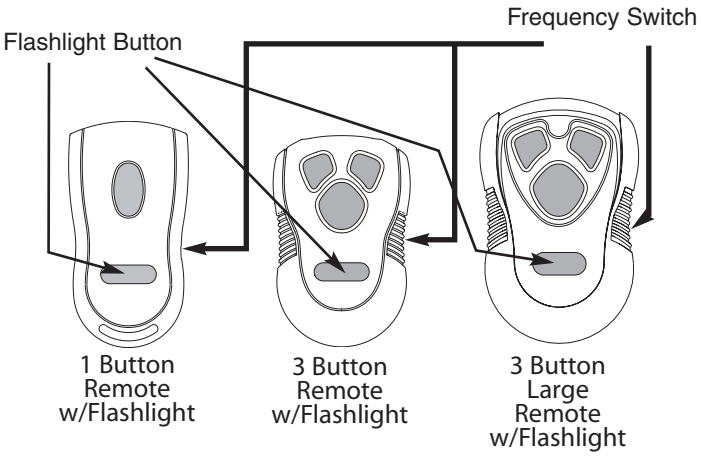

Figure 12 Genie Remote Controls

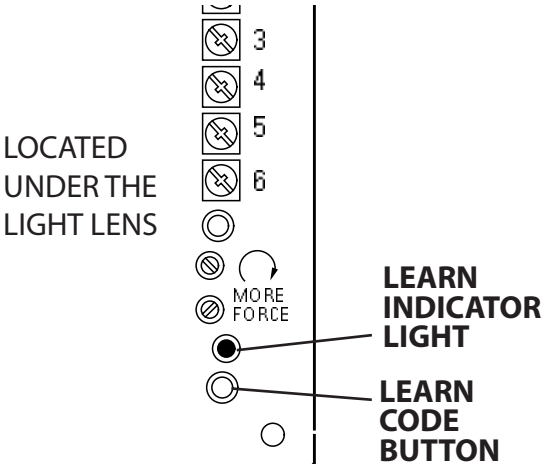

Figure 13 Learn Code Button and Indicator Light. (Located Lower Right Corner).

ABOUT DUAL FREQUENCY REMOTE TRANSMITTERS

Your garage door opener (GDO) features a unique dual frequency remote control system for reliable service in today's crowded airwaves. Overcrowded airwaves may intermittently interfere with GDO's remote control system. The dual frequency feature greatly reduces the possibility of unwanted interference.

The receiver in the GDO's powerhead can receive signals at 315 AND 390 MHz. The remote is factory set at 315 MHz. See Figure below for frequency selector switch.

Switch your remote control frequency when:

- Remote does not have adequate range.
- Remote works inconsistently with fresh battery installed - LED feedback lights up when pressing button.
- Programming your car's HomeLink® system.

To program a HomeLink® device:
(This GDO is HomeLink® compatible.)

- Use a small flat screwdriver to switch the frequency selector to 390 MHz.
- Follow the HomeLink® instructions in your car owner's manual.
- Reset the remote control frequency to 315 MHz for everyday use.

NOTE

- Each Remote Control must be programmed separately.
- The Remote Controls will not close the garage with malfunctioning Safe-T-Beam® System.
- Program Remote Controls, while at least 24" from Antenna Wire.
- If the red Learn Indicator Light blinks rapidly, programming stopped. Restart programming.
- Each Button on a multi-button Remote Control is for a different Opener. Cannot use more than one Button for same Opener.
- A maximum of seven Remote Controls or Wireless Keypads can be stored into the Receiver at one time. If a Remote Control becomes lost, or if you want to delete a Remote Control or Wireless Keypad, see "To Erase All Receiver Memory."

Installation of Lens and Bulb

A Install a 100 Watt light bulb (not included) into Light Socket (**Figure 14**):

- Rough service, 130 Volt bulbs are recommended.

B Install Lens into slots in Motor Cover.

- Insert Bottom hinges into slots provided in metal front cover of Power Head.
- Flip Lens up and fasten with molded latches on lens.

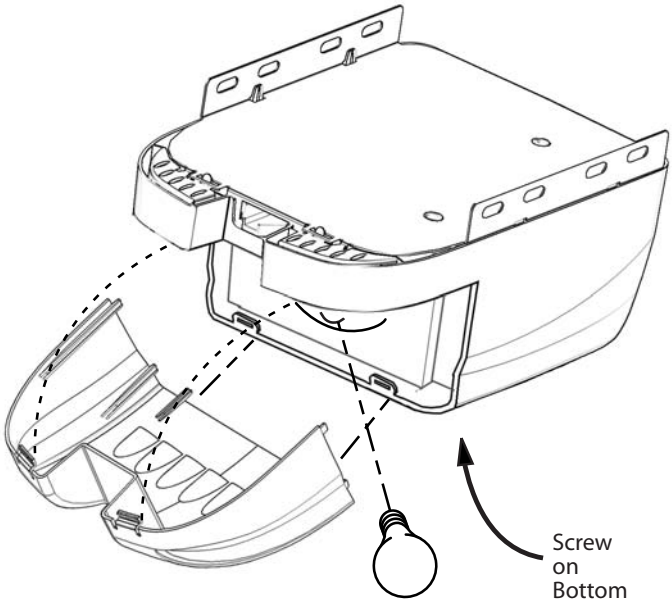

Figure 14 Install Lens and Light bulb

Transmitter Compliance Statement

Transmitters comply with all United States and Canadian legal requirements as of the date of manufacture. No warranty is made that they comply with all legal requirements of any other jurisdiction. If transmitters are to be used in another country, the importer must determine compliance with any local laws and regulations which may differ from United States and Canadian requirements prior to use.

Los transmisores cumplen con todas las reglamentaciones legales de los Estados Unidos y del Canadá, en la fecha de fabricación. Ninguna garantía se da que cumplan con todas as reglamentaciones legales de ninguna otra jurisdicción. Si los transmisores se van a utilizar en otro país, el importador debe determinar si cumplen con las reglamentaciones y leyes locales que puedan ser diferentes a las reglamentaciones de los Estados Unidos y del Canadá, antes de usar los mismos.

Les émetteurs sont conformes à la réglementation américaine et canadienne à compter de leur date de fabrication. Aucune garantie n'est stipulée indiquant qu'ils sont conformes à toutes les prescriptions juridiques d'autres autorités. Si les émetteurs sont utilisés dans d'autres pays, il incombe à l'importateur d'en déterminer leur conformité aux lois et règles locales pouvant différer de celles des États-Unis et du Canada avant toute utilisation desdits émetteurs.

Sendegeräte entsprechen allen gesetzlichen Bestimmungen in den USA und Kanada zum Zeitpunkt der Herstellung. Wir übernehmen keine Gewährleistung für die Einhaltung aller gesetzlichen Bestimmungen in anderen Ländern. Sollen Sendegeräte in anderen Ländern eingesetzt werden, so muss der Importeur vor dem Gebrauch sicherstellen, dass die Sendegeräte auch solchen lokalen Bestimmungen entsprechen, welche von den Bestimmungen der USA und Kanadas abweichen.

截止于制造日期，传动装置符合美国和加拿大的所有法律要求。不提供传动装置符合任何其他司法地区所有法律要求之担保。如果传动装 置需在任何其他国家使用，进口商必须在使用之前确定装置符合与美国和加拿大要求不同之所有地方法规条例。

トランスミッターは、製造日付けのアメリカ合衆国及びカナダの法的条件に準拠します。しかしながら、トランスミッターがアメリカ合衆国及びカナダ以外の国の法的条件に準拠するか否かは一切保証できません。トランスミッターがアメリカ合衆国及びカナダ以外の国で使用される場合、同製品の使用に先立つ法規制がこれらの国々と異なることがあるため、輸入者は同製品が輸入国の法規制に準拠することを確認しなければなりません。

트랜스미터들은 미국과 캐나다 전역에서 제조 날짜를 명기해야 하는 요구사항에 따라야 합니다. 기타 다른 관할권의 모든 법적인 요구 사항에 따라야 하는 책임은 없습니다. 만일 트랜스미터들이 기타 다른 지역에서 사용될 경우 수입업자는 사용하기에 앞서 미국과 캐나다와의 요구사항과는 다를지도 모르는 그 지역의 법과 조례에 따라야 할지의 여부를 결정해야 합니다.

Important Safety Instructions

⚠ WARNING

TO REDUCE THE RISK OF SEVERE INJURY OR DEATH

1. READ AND FOLLOW ALL INSTRUCTIONS.
2. Never let children operate or play with the Door Controls. Keep the Remote Control away from children.
3. Always keep the moving door in sight and away from people and objects until the door is completely closed. **NO ONE SHOULD CROSS THE PATH OF THE MOVING DOOR**.
4. **NEVER GO UNDER A STOPPED, PARTIALLY OPEN DOOR**.
5. Test Opener monthly. The door **MUST** reverse on contact with a 1-1/2" high object (or a 2" x 4" board laid flat) at the center of the doorway on the floor. After adjusting either the Force or the Limit of travel, retest the Door Opener. Failure to adjust the Opener properly may cause severe injury or death.
6. When possible use the Emergency Release only when the door is closed. Use caution when using this Release with the door open. Weak or broken springs are capable of increasing the rate of door closure and increasing the risk of severe injury or death.
7. **KEEP GARAGE DOORS PROPERLY BALANCED**. See Owner's Manual. An improperly balanced door increases the risk of severe injury or death. Have a Genie Factory Authorized Dealer make repairs to cables, spring assemblies, and other hardware.
8. **SAVE THESE INSTRUCTIONS.**

⚠ WARNING

Use the Wall Console included with Opener. Any other wall console can cause the Opener to operate unexpectedly and the light to stop working.

Scheduled Maintenance

A Monthly:

- Door springs and door hardware:
  - Oil door roller, bearings, and hinges using silicone lubricant or light oil.

⚠ WARNING

Do not operate door automatically or manually if springs are broken. Contact a Genie Factory Authorized Dealer for service or call Customer Service at **1-800-35-GENIE**.

- Balance Door.
  - Close door.
  - Release Carriage Assembly from Rail Assembly by pulling down on Emergency Release Knob.
  - Raise door manually 3'- 4' and verify that door stays at that position. See Check Step 2 on page 5.

NOTE

When the door is 3' - 4' above the ground, the door should stay open. Slight movement is acceptable. If the door moves too much, contact a Genie Factory Authorized Dealer for service or call Customer Service at **1-800-35-GENIE.**

  - Reattach Carriage Assembly to Rail Assembly:
    a. Pull the Emergency Release Knob toward Power Head.
    b. Close door.
- Contact Reverse Test.
  - Perform Adjustment Step 2 on page 10.

⚠ WARNING

If the door fails to reverse on contact with the board, adjust the Close Force Control as specified in Set Limit Switches and Force Controls on page 9. If the Opener still fails, contact a Genie Factory Authorized Dealer for service or call Customer Service at **1-800-35-GENIE**.

FCC AND IC CERTIFIED

All devices comply with Part 15 of the FCC Rules. Operation is subject to the following two conditions: (1) this device may not cause harmful interference, and (2) this device must accept any interference received, including interference that may cause undesired operation.

B As Needed:

- Replace Light Bulb

Notes

Troubleshooting Guide

Safe-T-Beam® System Self-Diagnostic Troubleshooting

Source (Red LED)	Sensor (Green LED)	Possible Problem	Solution
ON	ON	Normal operation	None required
OFF	OFF	• Power Head not powered • Wiring from Power Head bad	• Check breakers, fuses, plugs • Check wiring for obvious shorts
OFF	ON	• Wiring to Source missing or bad • Power has been interrupted	• Check wiring • Remove power and reapply
2 BLINKS, Pause (Repeat)	ON	• Beam not aligned • Beam obstructed • Sensor defective	• Check Source, Sensor alignment • Check for obstruction • Contact Customer Service
2 BLINKS, Pause (Repeat)	OFF	• Wire to Sensor missing or bad • Sensor defective	• Check wiring • Contact Customer Service
3 BLINKS, Pause (Repeat)	ON	• Sensor receiving interference	• Determine source of interference • Check for sunlight or another opener on nearby door • Contact Customer Service
4 BLINKS, Pause (Repeat)	ON	• Source not sending pulses • Source defective	• Contact Customer Service • Contact Customer Service

General Troubleshooting

Problem	What To Do
Opener does not run from Wall Control	**1.** Check Lock switch on Wall Control Installation Poster. **2.** Check Power Source: • For Grounded Plug Connection. – Plug a lamp into the electrical outlet used for the door opener. a. If lamp lights, power source is good. b. If lamp does not light, check fuse or circuit breaker. • For Permanent Wiring Connection. – Check fuse or circuit breaker. **3.** Check connections (see Wall Console Installation on Installation Poster): • At Power Head Terminals and Wall Control.
Door Opener starts for no apparent reason	**1.** Check Wires to ensure that they are not cut (Staples can cut insulation and short Wires) Replace any shorting Staples and shorted Wires. **2.** Was Remote Control lost or stolen? If so, erase all Remote Control codes from Receiver's memory and reprogram for remaining remote controls. (See Erase All Receiver Memory on page 11). **3.** Ensure that no Buttons are stuck "pushed-in" on Wall Console or any Remote Controls.
Door starts down, then stops before it is completely closed	**1.** Check Close Limit Switch setting (page 9 and poster). Adjust as needed. **2.** Check Force Setting (pages 9 and 10). Adjust as needed. **3.** Check for shorted wires.
Door starts down, then stops and goes back up	**1.** If a new installation, check Door Arm position. **2.** Check operation of Contact Reverse function. **3.** Check Safe-T-Beam® System for beam obstruction or misalignment of Lenses. **4.** Check Safe-T-Beam® System diagnostic code. **5.** Check Close Force adjustment (see Set Limit Switches and Force Controls on pages 9 and 10). Adjust as needed. **6.** Check garage door for binding.
Door will only run closed	**1.** Check Open Limit Switch for a short circuit and for proper wiring. **2.** Check Open Force adjustment (see Set Limit Switches and Force Controls on pages 9 and 10). Adjust as needed. **3.** Check condition of garage door and door spring(s). **4.** WARNING: **If you suspect a problem with the garage door hardware or springs, contact a Genie Factory Authorized Dealer for service, or contact Customer Service at 1-800-35-GENIE**. **5.** Check Position of Lock Switch on Console.
Door will only run open	**1.** Check Safe-T-Beam® System as detailed in the Safe-T-Beam® System Self-diagnostic Troubleshooting Chart (page 15). **2.** Check Close Limit Switch for a short circuit and for proper wiring. **3.** Check Close Force adjustment (see Set Limit Switches and Force Controls on pages 9 and 10). Adjust as needed.
Lights will not turn off	**1.** Disconnect Wires connecting Pushbutton to Power Head (see Pushbutton Installation on poster). Check their condition and either replace or reconnect. **2.** Until a replacement Wall Console can be obtained, disconnect Wall Console and use only Remote Controls or Wireless Keypad to operate Opener. **3.** Check for non-compatible wall control.
Door starts up, but stops before it is completely open	**1.** Check (ensure) that garage door and Opener are in good repair, properly lubricated, and properly balanced as detailed in Maintenance Section. **2.** WARNING: **If you suspect a problem with the garage door hardware or springs, contact a Genie Factory Authorized Dealer for service, or contact Customer Service at 1-800-35-GENIE**. **3.** Check Open Limit Switch for a short circuit and for proper wiring. **4.** Check Open Force adjustment (see Set Limit Switches and Force Controls on pages 9 and 10). Adjust as needed.
Operator runs, but door does not move	**1.** Ensure Carriage Assembly is engaged to Carriage Slide (see Install Carriage Assembly onto Rails on Installation Poster). **2.** Check Force adjustment (see Set Limit Switches and Force Controls on pages 9 and 10). Adjust as needed.
Wall Console Vacation Lock function does not work	**1.** Ensure Carriage Assembly is in contact with Close Limit Switch. **2.** Check when door is fully closed, that Carriage activates Close Limit Switch. If not, adjust position of Close Limit Switch (See pages 9 and 10).
Noisy Operation	**1.** Be sure all fasteners are tight. **2.** Check (ensure) that garage door and Opener are in good repair, properly lubricated, and properly balanced as described in Maintenance Section (page 13).

Wiring Diagram

⚠ WARNING	Shut off power before opening the Cover. Components inside Cover May Cause Electric Shock

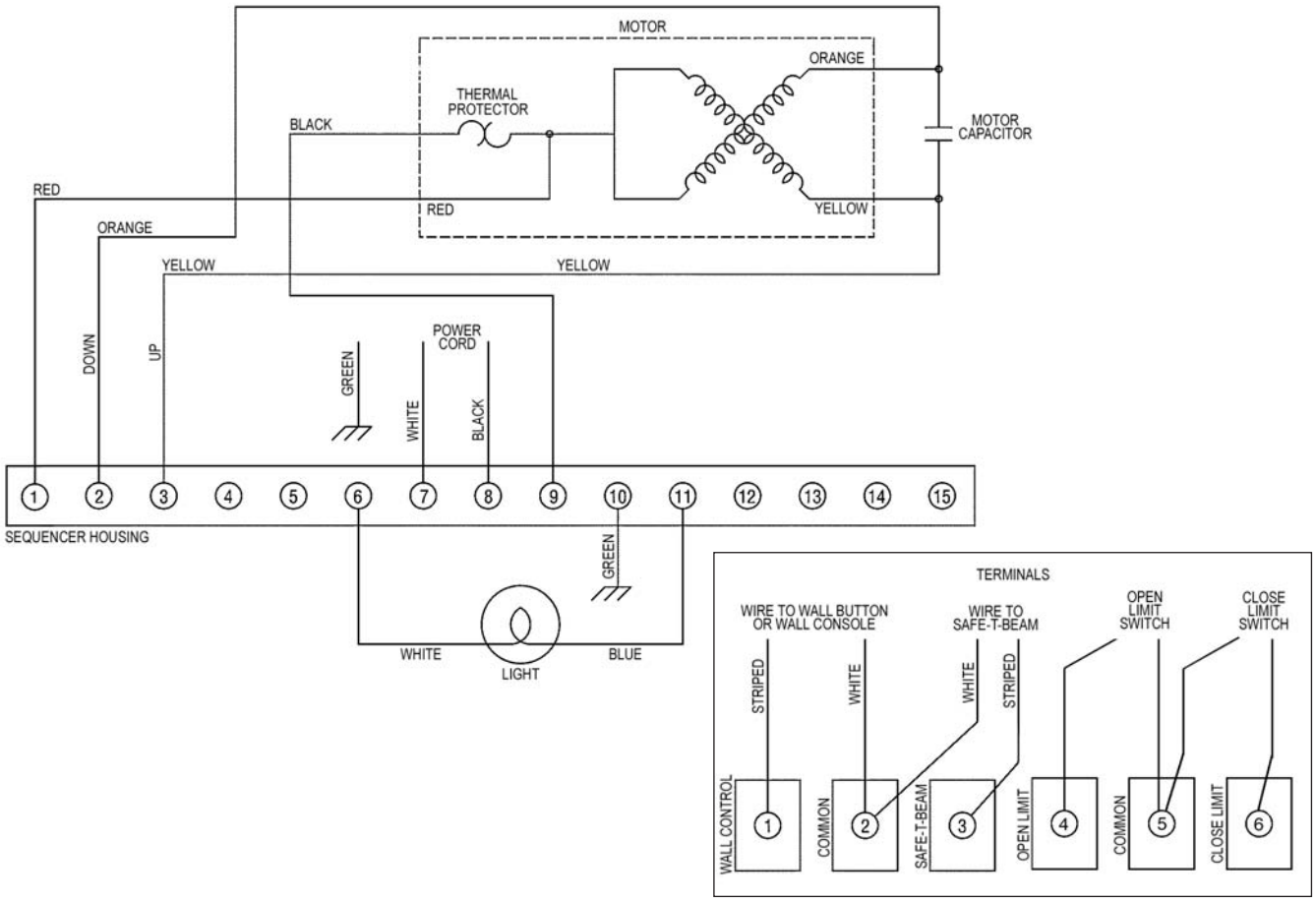

Power Head

[1] Power Head Assembly

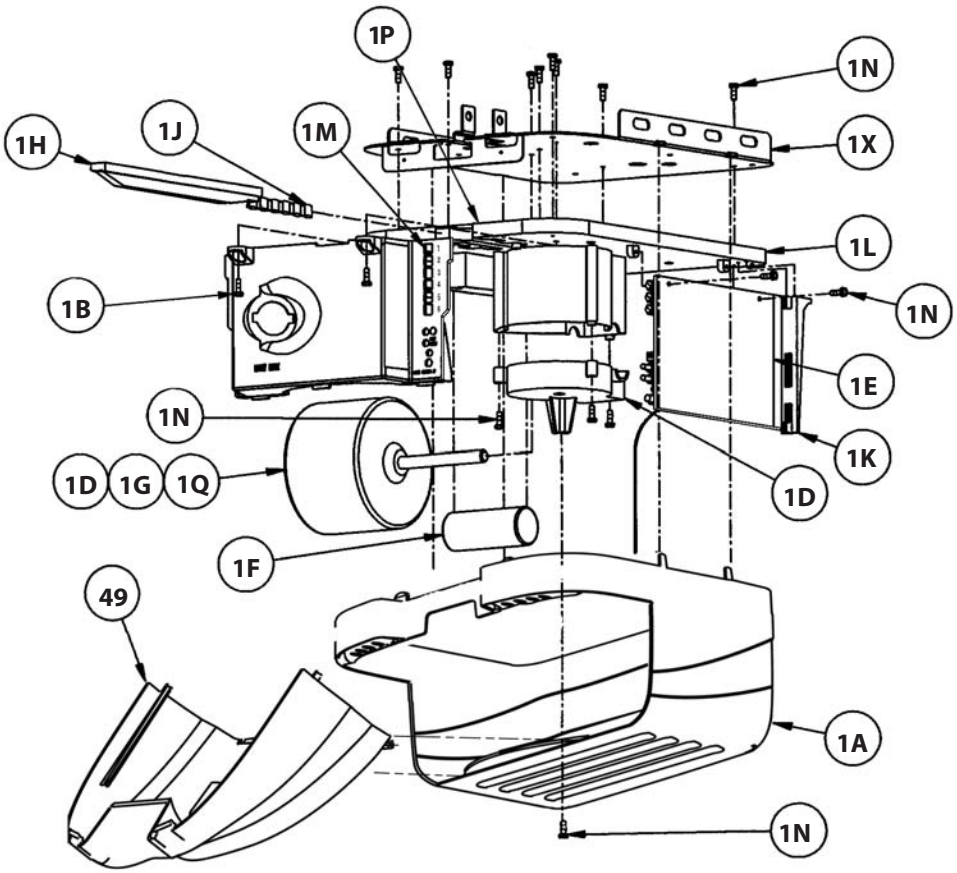

Power Head Parts List

Item	Part Name	Number Included
* 1	Power Head Assembly	1
* 1A	Cover (by Series Model)	1
* 1B	Front Panel Assembly	1
* 1D	Motor Parts	1
* 1E	Circuit Board Assembly	1
* 1F	Capacitor (By Series/Model)	1
* 1G	Opto Wheel (not shown)	1
* 1H	Carriage Slide	1
* 1J	Chain	1
* 1K	Circuit Board Bracket	1
* 1L	Drive Module	1
* 1M	Terminal Strip	1
* 1N	No. 8-32 x 3/4" Hex Head Screw w/int. Lockwasher	1
* 1P	Shock Absorbtion Stop	1
* 1Q	Motor Mount Bracket (not shown)	1
* 1X	Chassis	1
4	1/4-20 Shoulder Bolt	1
5	1/4" Flange Nut	1
39	Coupler	1
41	No. 8-32 x 3/8" Phillips Hex Head Screw	1
42	No. 8-32 x 3/8" Phillips Pan Head Screw	1
48	Mounting Straps	2
49	Light Lens	1

* Pre-assembled

(continued next page)

Rail & Attachments

[2] Power Head Assembly

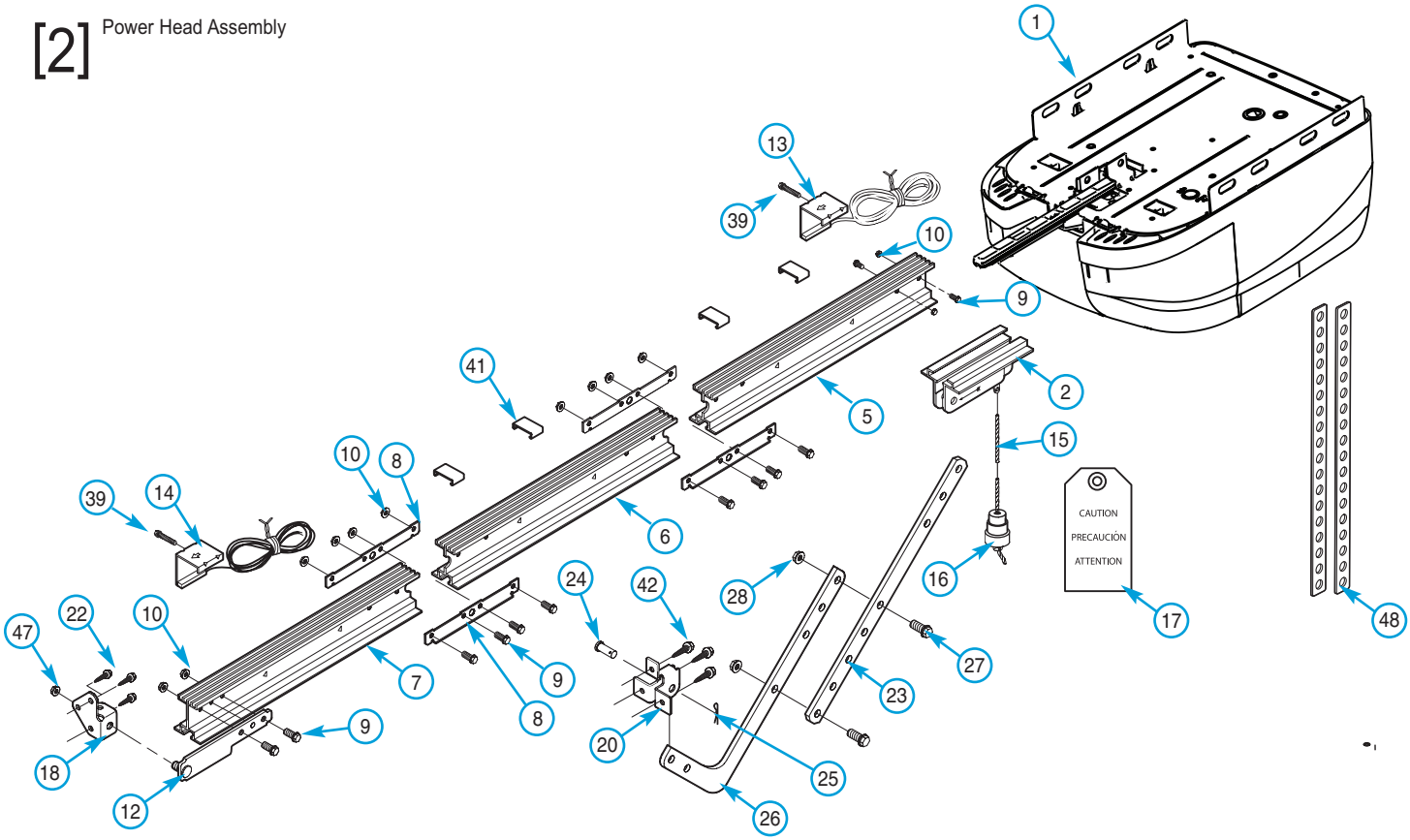

Parts List

Item	Part Name	Number Included
1	Power Head Assembly (main box)	1
2	Rail Assembly (1-piece)	
4	Rail Assembly (3-piece)(main box)	1
5	First Rail Section (separate box)	1
6	Middle Rail Section (separate box)	1
7	End Rail section (separate box)	1
8	Rail Clamps (blue bag)	4
9	1/4"-20 x 5/8" Hex Head Bolt (blue bag)	12
10	1/4"-20" Hex Flange Nut (blue bag)	12
11	Carriage Assembly (main box)	1
12	Rail Strap (blue bag)	1
13	Limit Switch (white wire)(blue box)	1
14	Limit Switch (brown wire)(blue box)	1
15	Release Cord (green bag)	1
16	Release Knob (green bag)	1
17	Emergency Release Tag (green bag)	1
18	Header Bracket orange bag)	1
20	Door Bracket (orange bag)	1
22	1/4" x 2" Lag Screw (orange bag)	8
23	Straighth Door Arm (main box)	1
24	Clevis Pin (yellow bag)	2
25	Cotter Pin (yellow bag)	2
26	Curved Door Arm (main box)	1
27	3/8"-16 x 7/8" H. H. Bolt (yellow bag)	2
28	3/8"-16 Hex Flange Nut (yellow bag)	2
29	Wire (main box)	1
30	Insulated Staples (red bag)	varies by model

Parts List

Item	Part Name	Number Included
31	Wall Button (red bag)	varies by model
32	Wall Console (main box) model	varies by
33	#6 x 1-1/4" pan head phillips screw	varies by model
34	Entrapment Warning Label (manual)	1
35	Safe-T-Beam® Sensor (main box)	1
36	Safe-T-Beam® Source (main box)	1
37	Safe-T-BeaM® Mounting Brackets	2
38	Remote Controls (main box)	varies by model
39	#8-32 x 1" Machine Screw (green bag)	2
40	Safety and Maintenance Guide (manual)	1
41	Wire Clips	varies by model
42	1/4"-20 x 3/4" Self-drilling Screws (orange bag)	3
44	#10-16 x 1-1/4" Phillips Hex Head Screw (yellow bag)	4
46	5/16"-18 x 3/4" Hex Head Bolt (orange bag)	3
47	5/16"-18 Hex Flange Nut (orange bag)	4
48	Mounting Straps (main box)	2

Garage Door Opener Accessories Order Form
Formulario de pedido de accesorios para abridores de puertas de garaje
Formulaire de commande des accessoires pour ouvre-porte de garage

For additional accessories not shown. visit our website at www.geniecompany.com
Para accesorios adicionalesno mostrada, visite nuestro sitio web en www.geniecompany.com
pour les accessoires supplémentaires pas montré, visiter notré site web à www.geniecompany.com

How many? ¿Quántos? Comment beaucoup?

(GI CTD-1) 1-Button Compact Remote - Allows remote operation of garage door.
Comprima el Mando de Distancia - Proporcióar operación remoto de la puerta del garaje.
Télécommande compacte - Permettre opération éloign´´de porte de garage.
P/N 35674R $36.50

(GI F TD-1) 1-Button Flashlight Transmitter - Remote Controller with a Flashlight.
1 abrocha transmisor de linterna - Director remoto con una linterna.
1-boutenner l'émetteur de lampe de poche - Le contrôleur éloigné avec de lampe de poche.
P/N 35657R $45.00

(GI CTD-3) 3-Button Compact Remote - Allows remote operation of 3 garage doors.
De 3 botones Comprima el Mando de Distancia - Proporcióar operación remoto de tres las puertas del garaje.
3-boutenner la Télécommande compacte - Permettre opération éloign´ trois portes de garage.
P/N 35694S $50.00

(GWC-2W) Deluxe Wall Console - Operates Garage Door. Independent light control. Security vacation lock.
Consola de lujo de pared - Acciona la puerta del garaje. Control de luz independiente. Cerradura de seguridad para vacaciones.
La Console dse luxe de Mur - Actionne la porte de garage. Commande d'éclairage indépendante. Interrupteur de verrouillage de sécurité.
P/N 35661R $35.00

(GWKPD) Dual Frequency Wireless Keypad - Operates Intellicode® Garage Door Openers without Remote Control or key.
Sistema de entrada por teclado numérico inalámbrico - Acciona los abridores de puertas de garaje Intellicode® sin control remoto o llave.
Système d'ouvre-porte de garage à clavier sans fil - Actionne les ouvre-porte de garage avec Intellicode® sans télécommande ni clé.
P/N 35691R $50.00

(GLU-3) 3/4 oz. Screw Drive Lubricant - Ensures proper equipment wear protection.
3/4 once Lubricante de tornillo accionar - Asegura componente correcto protección por deterioro.
La onza 3/4 Lubricant de la vis - Garantir componant exact par systéme défense vers user.
P/N 35218AS $5.00

(GW-2) Universal Wall Button - Provides additional convenient inside operation of door.
Botón de pared universal - Proporciona operación conveniente de la puerta desde el interior.
Bouton mural universel - Actionne l'ouvre-porte de l'intérieur du garage.
P/N 35693R $3.75

(GPS-5) Perfect Stop® - Ensures perfect parking.
Stop Perfecto® - Asegura el estacionamiento perfecto.
Butoir Perfect Stop® - Permet de stationner à la perfection dans le garage.
P/N 35677R $4.00

(GABX8) QuietLift Extension Kit - An Extension that increases the travel of an Opener to accommodate an eight foot door.
Juego de extensión de cadena deslizable - Una extensión para aumentar la longitud de la baranda de Chain Glide, para acomodar una puerta de 8 pies (2,43 m).
Nécessaire de prolongement du coulisseau - Rallonge de prolongeant la course de l'ouvre-porte Chain Glide pour une porte de 2,4 m (8 pi) de hauteur.
P/N 35663R $32.00

(LCGX-8) ChainLift Extension Kit - An Extension that increases the travel of an Opener to accommodate an eight foot door.
Juego de extensión de cadena deslizable - Una extensión para aumentar la longitud de la baranda de Chain Glide, para acomodar una puerta de 8 pies (2,43 m).
Nécessaire de prolongement du coulisseau - Rallonge de prolongeant la course de l'ouvre-porte Chain Glide pour une porte de 2,4 m (8 pi) de hauteur.
P/N 35679R $32.00

(GSX-8) DirectLift Extension Kit - An Extension to increase travel of an Operator to accommodate eight foot door.
Juego de extensión deslizante de Screw Drive - Una extensión para aumentar la carrera de un abridor deslizable, para acomodar una puerta de 8 pies (2,43 m.).
Nécessaire de rallonge du Screw Drive - Rallonge de prolongeant la coursede l'ouvre-porte pour une porte de 2,4 m (8 pi) de hauteur.(GIRU-1T)
P/N 35678R $32.00

(60 WATT) Enhanced/Rough Service Light Bulb - Ensures proper equipment compatability.
Bombilla de 60 Vatios - Asegura componente correcto de sistema.
Éclairage de 60 WATT - Garantir componant exact par systéme.
P/N 26210A.S $2.73

(GER-2) Emergency Release Kit - Provides access to garage from outside in the event of an electrical power failure.
Juego de pica-porte de pestillo - Permitir entrtada desde por fuera de garaje porque corte de eléctrico.
Nécessaires de Déclenchement de secours - Le nécessaire de déclenchement de secours est conçupour vous permettre d'accéder à votre garage depuis l'extérieur en cas de panne de courant et lorsqu'il.
P/N 35675R $20.00

STB Adapter Brackets (2) - Used in conjunction with standard STB Brackets. They provide additional clearance and mounting options.
El adaptador pone entre paréntesis (2) - Usado en unión con paréntesis uniformes de montar de STB, ellos proporcionan el espacio libre adicional junto con mortar las opciones.
Crochets d'adaptateur (2) - Utilisé conjointement avec STB standard monter les crochets, ils fournissent le dégagement supplémentaire avec monter d'options.
P/N 34439R.S $4.37

Ordering Instructions

No C.O.D. shipments. Please include check or money order, made payable to **The Genie Company**. **Do not send cash**. Allow 3-4 weeks for delivery. 1-800-354-3643. Please have part number and credit card ready. Mail Order Form to: **Genie Company, 22790 Lake Park Blvd, Alliance, Ohio 44601**. We accept Visa or Mastercard on phone orders only.

Please add local sales tax if you reside in one of the states listed.

California, Connecticut, Florida, Georgia, Illinois, Indiana, Maryland, Massachusetts, Michigan, New Jersey, New York, Ohio, Tennessee, Virginia, Wisconsin

TOTAL ORDER	$
SHIPPING & HANDLING	$ 5.00
STATE SALES TAX	$
GRAND TOTAL	$

Las Instrucciones que Ordenan

No se aceptan pedidos de pago contra entrega (COD). Sírvase incluir su cheque o giro postal, la cuenta pagadera hecha a**The Genie Company**. **No envíe dinero en efectivo**. Concédanos 3 a 4 semanas para la entrega. 1-800-354-3643. Sírvase tener listos los números del modelo y de la tarjeta de crédito. Enviar hacer un pedido de mercancia a: **Genie Company, 22790 Lake Park Blvd, Alliance, Ohio 44601**.Aceptamos pedidos telefónicos de Visa o Mastercard.

Sírvase agregar el impuesto de ventas local si usted reside en uno de los siguientes estados:

California, Connecticut, Florida, Georgia, Illinois, Indiana, Maryland, Massachusetts, Michigan, New Jersey, New York, Ohio, Tennessee, Virginia, Wisconsin

TOTAL DEL PEDIDO	$
FLETE Y MANEJO	$ 5.00
IMPUESTO DE VENTAS ESTATAL	$
GRAN TOTAL	$

Instructions Commandant

Pas d'expédition contre remboursement. Veuillez inclure un chèque ou un mandat bancaire, le payable fait à **The Genie Company**. **N'envoyez pas d'argent comptant**. Accordez de 3 à 4 semaines pour la livraison. 1-800-354-3643. Ayez sous la main le numéro de la pièce et celui de la carte de crédit. Mettre à la poste le arrngement à: **Genie Company, 22790 Lake Park Blvd, Alliance, Ohio 44601**. Nous acceptons les commandes par téléphone avec paiement par carte de crédit Visa ou Mastercard.

Veuillez indiquer les taxes de vente locales si vous résidez dans l'un des états répertoriés ci-dessous.

California, Connecticut, Florida, Georgia, Illinois, Indiana, Maryland, Massachusetts, Michigan, New Jersey, New York, Ohio, Tennessee, Virginia, Wisconsin

COMMANDE TOTALE	$
MANUTENTION ET EXPÉDITION	$ 5.00
TAXE DE VENTE	$
TOTAL GLOBAL	$

SHIP ORDER TO:
ENVIAR MERCANCIA CON:
EXPÉDIER MARCHANDISE POUR:

NAME / NOMBRE / NOM

ADDRESS / DIRECCIÓN / ADRESSE

CITY / CIUDAD / VILLE

STATE / ESTADO / ÉTAT

ZIP / CÓDIGO POSTAL / CODE POSTAL

(Prices subject to change without notice)
(Valoran el cambio con sujeción a sin nota)
(Les prix assujettissent pour changer sans la notification)

d_42227_38640_11.5