3560935878

The Genuine. The Original.

OVERHEAD DOOR®

PowerMax™ XL

4060

DC POWERED SCREWDRIVE OPENER

TABLE OF CONTENTS

Warranty Information 2
Your Documentation Page 3
Safety Information. 4
Safety Features 4
Important Installation Instructions 4
Pre-Installation Checklist. 5
Adjustments 9
Programming the Remote Control 11
Installation of Light Bulbs. 12
Maintenance 13
Troubleshooting Guide 15
Wiring Diagram 18
Parts List and Explosions. 19, 20
Accessories 21

COMPLETE WITH CODEDODGER® REMOTE CONTROL AND SERIES II ELECTRONICS

For 7' 6" Doors. Extension Kit is available for 8' Doors

Included Wall Console MUST be installed prior to Operation of this Garage Door Opener.

Safe-T-Beam® Safety Reverse System MUST be Installed and the Force Controls MUST be Properly set to close door.

This Equipment meets or exceeds all Federal, State and UL 325 Safety Requirements.

Will not operate "twice as fast" on one-piece doors.

Having Difficulty? Need Help?

Please call us: 1-800-784-5028
www.overheaddoor.com

Please have Model information ready when calling.

SAVE THIS MANUAL FOR FUTURE REFERENCE

The Overhead Door Corporation Limited Warranty

What is covered?

Any defect in material and product workmanship from personal, normal household use in accordance with the Owner's Manual.

For how long?

MODEL 4060L — **Lifetime*** on motor, and parts.

* for as long as you own your home. This warranty is non-transferable.

Who gets the warranty?

This warranty is limited to the consumer who originally purchased the product.

Geographic scope:

This warranty applies only to units installed and operated within the country where they were purchased.

Limitations:

IMPLIED WARRANTIES, INCLUDING THOSE OF FITNESS FOR A PARTICULAR PURPOSE AND MERCHANTABILITY (AN UNWRITTEN WARRANTY THAT THE PRODUCT IS FIT FOR ORDINARY USE), ARE LIMITED TO ONE YEAR FROM THE DATE OF PURCHASE. OVERHEAD DOOR WILL NOT PAY FOR: LOSS OF TIME; INCONVENIENCE; LOSS OF USE OF YOUR OVERHEAD DOOR PRODUCT OR PROPERTY DAMAGE CAUSED BY YOUR OVERHEAD DOOR PRODUCT OR ITS FAILURE TO WORK; ANY SPECIAL, INCIDENTAL OR CONSEQUENTIAL DAMAGES; OR ANY DAMAGES RESULTING FROM MISUSE OR MODIFICATION OF YOUR OVERHEAD DOOR PRODUCT.

Some states and provinces do not allow limitations on how long an implied warranty lasts or the exclusion of incidental or consequential damages, so the above limitations or exclusions may not apply to you.

This warranty is the only one we will give on your Overhead Door product, and it sets forth all our responsibilities regarding your Overhead Door product. There are no other express warranties.

State and province rights: This warranty gives you specific legal rights, and you may also have other rights which vary from state to state and province to province.

How to get warranty service:

To obtain warranty service for your Overhead Door product, you must provide proof of the date and place of purchase of the product.

1. Do-It-Yourself-Service.

Call the Overhead Door Consumer Connection toll free at 1.800.354.3643 to speak in person to a trained Overhead Door representative for assistance in diagnosing the problem and arranging to supply you with the required parts for do-it-yourself repairs. Trained service representatives are available Monday-Friday, 8:00 a.m. - 11:00 p.m., Eastern Time, and on Saturday, 10:00 a.m. to 7:00 p.m., Eastern Time (subject to holidays) You may also get the information you need at *www.overheaddoor.com*.

2. Service From Authorized Dealers.

You also may obtain warranty service from Overhead Door authorized dealers by calling the Overhead Door Consumer Connection at 1.800.654.3643 or by visiting *www.overheaddoor.com* before scheduling warranty service. If warranty service is provided by an authorized dealer, Overhead Door will provide all required parts under warranty at no charge to you, but the dealers are independent business people and may render a bench or service call charge for their services. Overhead Door will not reimburse you or otherwise be responsible for those charges.

We suggest that you retain your original packing material in the event we choose to repair or replaqce your Overhead Door Product and request that you ship it to us. Be sure to include your name, address, telephone number, proof of date and place of purchase and a description of the operating problem. After repairing or replacing, your Overhead Door product, we will ship it to your home at no cost to you for parts and labor, but you will have to pay a minimum of $5.00 for shipping and handling charges.

Your choice of either one of the above-described service options is your exclusive remedy under this warranty.

What this warranty does not cover:

This warranty does not cover batteries (which are considered replaceable parts), installation, commercial use, defects resulting from accidents, damage while in transit to our service location or damage resulting from alterations, misuse or abuse, lack of proper maintenance, unauthorized repair or modification of the product, affixing of any attachment not provided with the product, programming of the Remote Control Devices, Safe-T-Beam® adjustment/cleaning, staples through wiring, pinched or broken wires, Carriage disengaged, Force Control adjustments, door out of balance, broken springs or cables, power outages, use of extension cords, missing or damaged parts on discounted, clearanced, final sale or taped cartons, phantom operations (labor is not covered if Opener is functioning properly while technician is in garage), fire, flood, or acts of God, or other failure to follow the Owner's Manual.

FOR ANSWERS: CALL 1.800.354.3643

Please note the following information, so it is available if you need to call us.

Date Purchased	____ / ____ / ____
Serial Number	_____
Operator Model	_____
Remote Control Model	_____
Dealer Name	_____
Dealer Address	_____
City	_____
State	_____
Zip	_____

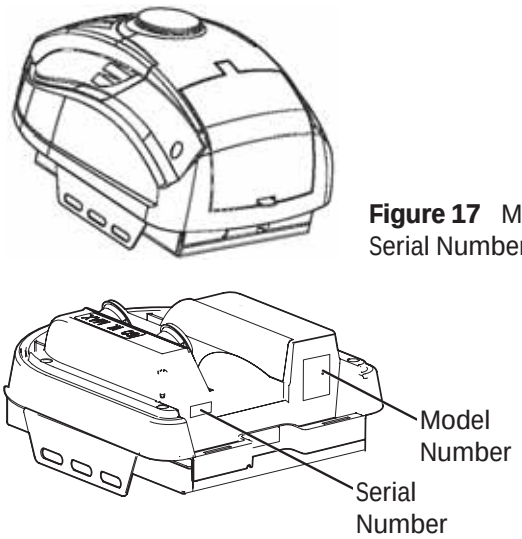

Figure 17 Model and Serial Numbers

NOTE

Please keep original or photocopy of your sales receipt with this manual for future reference should service ever be required.

Visit Our Website at: *www.overheaddoor.com*

SAVE THESE INSTRUCTIONS

Your Overhead Door Garage Door Opener Documentation Package

The documentation provided with your opener has been carefully designed and organized to make the assembly, operation, and continued maintenance of your product as easy and safe as possible. This material consists of two main items.

Operation and Maintenance Manual

While it is recommended that all documents be retained for future reference, this manual should contain most of the information that you will need over the lifetime of your product. The manual is designed in a "flip-flop" configuration with the english version in one half of the book and the spanish / french version in the other half. The basic contents of this manual are:

- Warranty Information
- Pre Installation Checklist to be reviewed prior to any assembly or installation
- Necessary Adjustments
- Programming Remote Devices
- Maintenance and Troubleshooting
- Parts Explosions
- Accessory Order Form
- Door Opener Association Safety and Maintenance Brochure (DASMA)
- Entrapment Warning Label - To be Adhered in close proximity to wall control

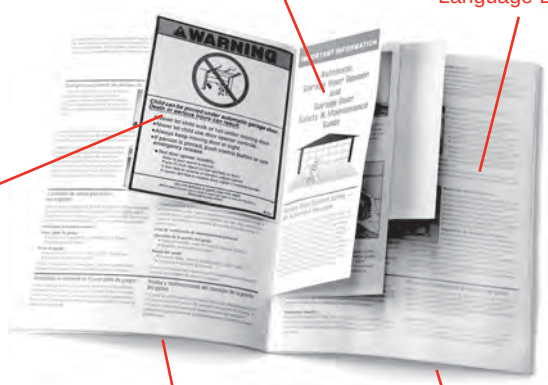

Assembly and Installation Poster

This poster is intended to give a convenient lay flat media to be used at the site of assembly and installation. Color coding is used to make steps and other information as clear as possible. This poster is Tri-Lingual with english instructions highlighted with a blue background. The basic contents of this Poster are:

- Quick Reference Poster
- Pictorial and step by step opener assembly instructions
- Pictorial and step by step opener installation instructions

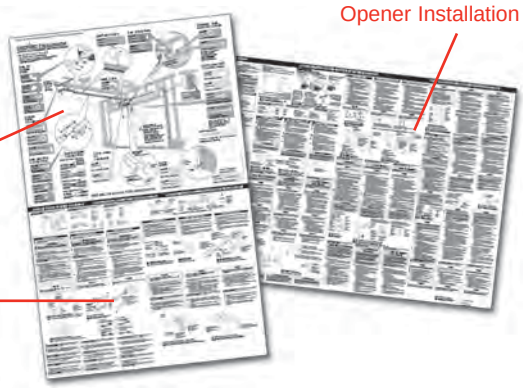

IT IS CRITICAL THAT ALL SAFETY WARNINGS THAT ARE MARKED CLEARLY IN BOTH THE MANUAL AND POSTER ARE READ, UNDERSTOOD AND FOLLOWED.

The Overhead Door Corporation is constantly striving to improve our products and the documentation that comes with them. If you have any suggestions or ideas for improving this product and it's documentation, please forward them to:

The Overhead Door Corp.
22790 Lake Park Blvd.
Alliance, Ohio 44601-3498

SAFETY INFORMATION

OVERVIEW OF POTENTIAL HAZARDS

Overhead doors are large, heavy objects that move with the help of springs under high tension and electric motors. Since moving objects, springs under tension, and electric motors can cause injuries, your safety and the safety of others depend on you reading the information in this manual. If you have questions or do not understand the information presented, call The Overhead Door Corp. or your local Overhead Door Distributor.

In this section, and those that follow, the words **Danger**, **Warning** and **Caution** are used to emphasize important safety information. The word:

⚠ **DANGER:** indicates an imminently hazardous situation which, if not avoided, will result in death or serious injury.

⚠ **WARNING:** indicates a potentially hazardous situation which, if not avoided, could result in death or serious injury.

⚠ **CAUTION:** indicates a potentially hazardous situation which, if not avoided, may result in injury or property damage.

The word **NOTE** is used to indicate important steps to be followed or important considerations.

POTENTIAL HAZARD	EFFECT	PREVENTION
MOVING DOOR	**WARNING:** Could result in death or serious injury.	• Keep people clear of opening while door is moving. • **Do Not** allow children to play with the door operator. • **Do Not** operate a door that jams or one that has a broken spring.
ELECTRICAL SHOCK	**WARNING:** Could result in death or serious injury.	• Turn off power before removing operator cover. • When replacing cover, make sure wires are not pinched or near moving parts. • Operator must be properly grounded.
HIGH SPRING TENSION	**WARNING:** Could result in death or serious injury.	• **Do Not** try to remove, repair or adjust springs or anything to which door spring parts are fastened, such as, wood blocks, steel brackets, cables or other like items. • Repairs and adjustments must be made by a trained door system technician using proper tools and instructions.

IMPORTANT INSTALLATION INSTRUCTIONS

⚠ WARNING:

TO REDUCE THE RISK OF SEVERE INJURY OR DEATH:

1. READ AND FOLLOW ALL SAFETY, INSTALLATION AND OPERATION INSTRUCTIONS. If you have any questions or do not understand an instruction, call your Factory Authorized installation professional.
2. **Do Not** install operator on an improperly balanced door. An improperly balanced door could cause severe injury. Repairs and adjustments to cables, spring assembly, and other hardware must be made by a trained service person using proper tools and instructions.
3. Remove all ropes, and disable all locks connected to the door before installing operator.
4. Install door operator 7 feet or more above the floor. Mount the emergency release knob 6 feet above the floor.
5. **Do Not** connect the operator to the source of power until instructed to do so.
6. Locate the control button:
   - Within sight of door.
   - At a minimum height of 5 feet, so small children cannot reach it.
   - Away from all moving parts of the door.
7. Install the entrapment WARNING label next to the wall button or console. Install the emergency release tag on, or next to, the emergency release
8. The operator must reverse when the door contacts a 1-1/2 inch high object on the floor at the center of the doorway. This is about the size of a 2" x 4" board laid flat.

SAFETY FEATURES

Safe-T-Beam® (STB) Non-Contact Reversing System
Places an invisible beam across door opening, that reverses the door during down travel to the fully open position if anything passes through beam.

Safe-T-Reverse® Contact Reversing System
Automatically stops and reverses a closing door within 2 seconds of contact with an object.

Safe-T-Stop® Timed Reversed System
Automatically opens a closing door, if door does not close within 30 seconds.

ForceGuard® Control
Used to set the force required for opening and closing door. For maximum safety, set the minimum force required to fully open and close door.

Automatic Lighting System
Light bulb up to 100 Watts max. , used for safer entries and exits. The light turns on when door is activated and automatically turns off 4.5 minutes later.

Manual Emergency Release
Allows the garage door to be opened or closed manually for emergencies or maintenance.

Pre-Installation Checklist

This Opener includes parts and supplies needed to install in **most** garages and connect to **most** garage doors. There are many variations of garages and garage doors. A few additional parts and supplies may be needed to install Opener into **your** garage and connect to **your** garage door. While checking items listed below, note any additional items you will need.

Tools used in this section:

- 12'+ Tape Measure
- Pencil
- Ladder
- Level

Check following items before assembling Opener:

Check Step 1: Check Door Condition and Thickness

Check condition of vertical stile in center of door, (**Figure 2**) and its connection to door's top and bottom beams.

A If door frame is nailed together and not a solid connection, door frame must be braced or reinforced before installing Opener.

B If door is "lightweight" (made with frame and skin - not solid), door (including door frame) must be braced or reinforced before installing Opener.

C A door opener reinforcement bracket may also be needed to connect garage door to Opener's Door Bracket. This Opener is designed for installation on a **properly braced** sectional door or **solidly braced** one-piece door.

D Contact your Overhead Door Distributor or dealer of your garage door for any necessary bracing and a door opener reinforcement bracket (if needed) before proceeding.

E If you have a wooden door, measure door's thickness. (1/4" x 2") Lag Screws are included for installing Door Bracket onto door. If your door is less than 2" thick, brace door or use shorter Door Bracket Lag Screws (1/4" x 1-1/4" – not included)

Check Step 2: Check Garage Door Alignment, Operation, and Balance

A Raise door, check alignment and see if it moves freely (**Figure 1**). If door appears out of alignment, binds, or does not move smoothly, contact an Overhead Door Distributor or dealer of your garage door for repairs and adjustments to door mechanism.

B Raise door to 3' – 4' above ground and carefully let go. Door should stay stationary. Slight movement is acceptable. More than slight movement means door is out of balance. Contact an Overhead Door Distributor or dealer of your garage door for repairs and adjustments to door mechanism.

C Check door type. Make a note of whether it is a sectional or a one-piece door (**Figure 2**).

⚠ WARNING:

If your door sticks, binds, or is out of balance, have it adjusted by an Overhead Door Distributor. Door springs, cables, pulleys, brackets and associated hardware are under extreme tension and can cause serious injury or death.

NOTE

The Powermax Opener is equipped with an Automatic Garage Door Balance Detection System. See Troubleshooting Guide on page 16.

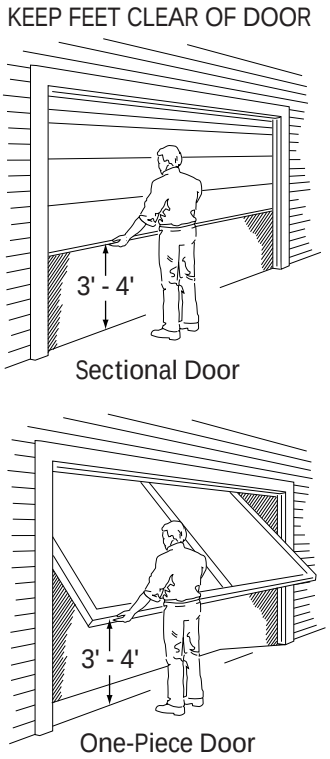

Figure 1 Checking door balance

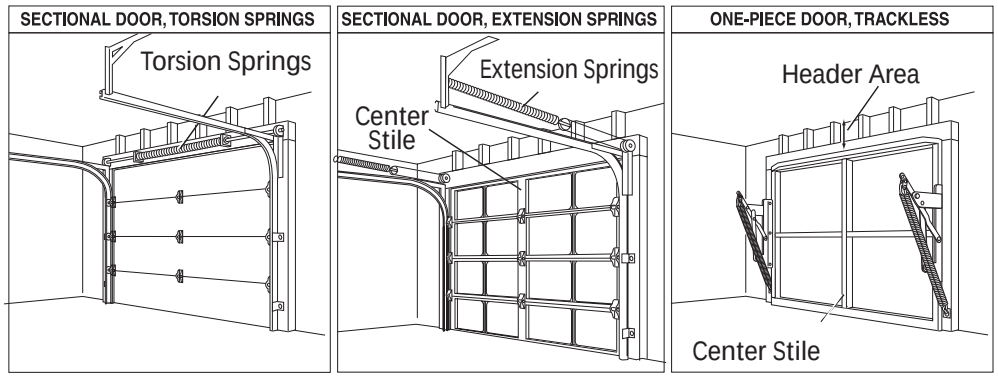

Figure 2 Note Door Type

Check Step 3: Measure Garage Door Height

Measure garage door height (7'-6", 8'-0", or taller) with tape measure.

A If door height is 7'-6" or less, continue with Check Step 4.

B If door height is 8'-0", you need a Rail Extension Kit. (**Figure 3**) (See Accessories Order Form, page 21).

C If door height is taller than 8'-0", the door opener you purchased is the wrong version. Contact an Overhead Door Customer Service Representative at **1-800-784-5028**.

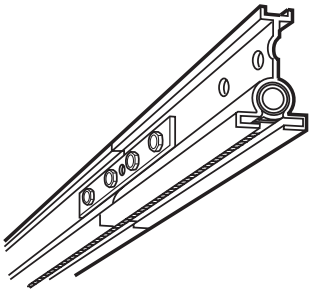

Figure 3 Rail Extension Kit

Check Step 4: Check Door Header Area

NOTE

The header is a heavily reinforced section of the wall just above the top of the garage door opening.

A Find vertical center line of door and header:
- Close door.
- Measure door width at top.
- Mark a point at center of door and on header directly above door. Draw a center line to connect points.

B Find Header Bracket mounting height (**Figure 4**): (Do not attach Header Bracket).
- Raise door, watching top edge of door and stop door when its edge reaches its highest point.
- Measure distance ("H") from top edge of door to floor.
  - For sectional doors, add 2-1/2" to "H". Mark a point on center line. Bottom of Header Bracket will be installed here.
  - For one-piece doors, add 6" to "H". Mark this point on center line. Bottom of Header Bracket will be installed here.

NOTE

- For both types of doors:
  - If the ceiling in your garage is so low that there is not at least a 3" space above the Header Bracket mounting point, contact a Factory Authorized Dealer.
- If a door spring is in the way, place the Header Bracket avove the spring. **Do Not** move the door spring.

⚠ WARNING:

Door springs are under extremely high tension and should be handled ONLY by a trained professional.

C Check wall for a stud or a solid header at your mark: (If checking a finished wall, a stud finder may be helpful).
- If location is above Header, a 2" x 6" board must be screwed to studs beside your mark with at least two Lag Screws and Flat Washers (not provided).
- Transfer your mark to new mounting board.

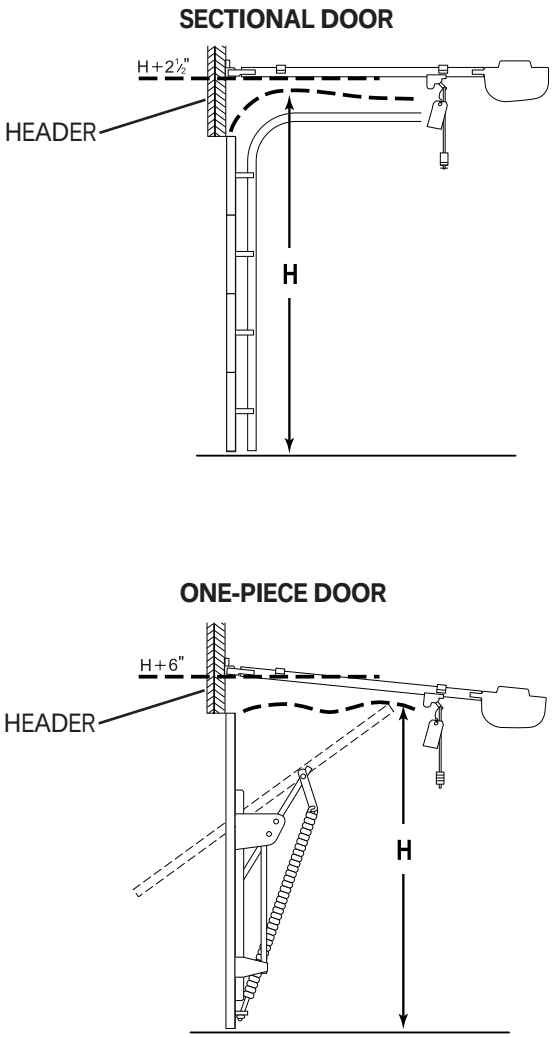

Figure 4 Find Highest Point of door travel

Check Step 5: Check Power Head Mounting Area

Check ceiling or space above where Opener Power Head will be mounted (**Figure 5**):

A Measure from garage door center line mark toward rear of garage:

- Approximately 10' back if garage has a 7' 6" door.
- Approximately 11' back if garage has an 8' 0" door.

NOTE

Mounting Straps are included to attach the Opener to most garage ceilings. Garage construction varies widely. Additional mounting straps or angle iron may be needed for your installation.

B Find location of ceiling joist or truss above where Opener Power Head will be and estimate type and quantity of materials needed for your installation (**Figure 6**).

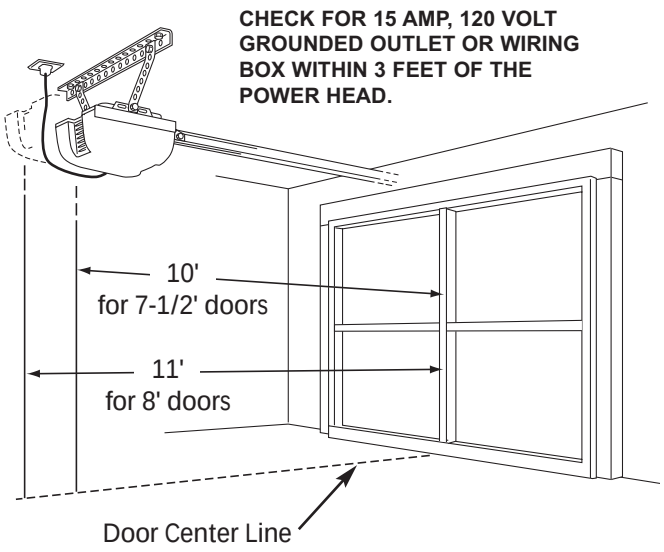

Figure 5 Check Power Head location

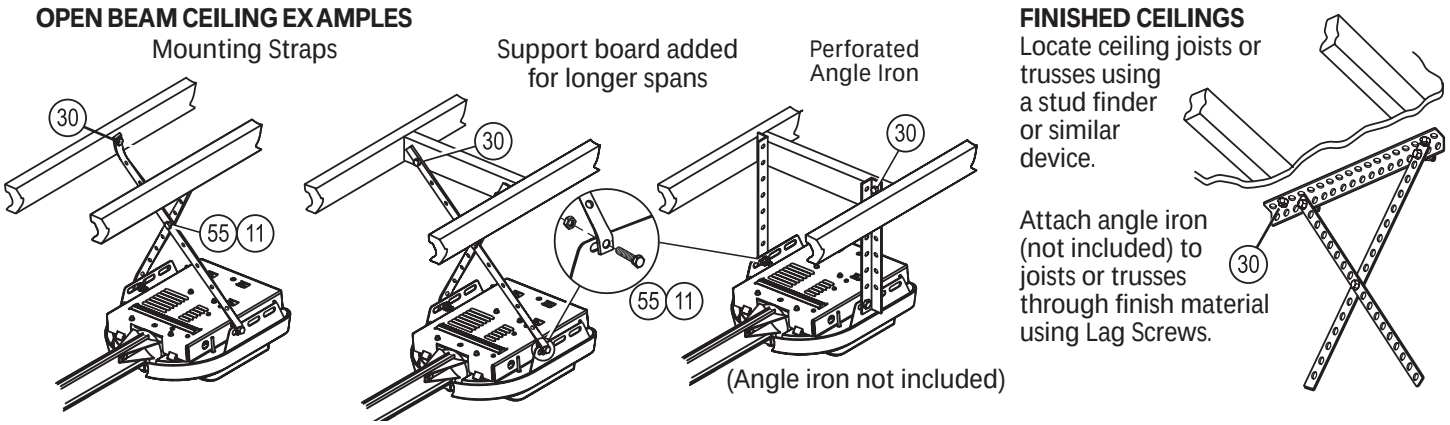

Figure 6 Mounting methods for open beam and finished ceilings

Check Step 6: Check Ceiling for Grounded Power Source

A Check that there is a 15 Amp 120 Volt grounded electrical outlet or grounded permanent wiring box (per building code) within 3' of Opener Power Head:

- If not, an outlet or wiring box must be installed. Contact a licensed electrician for installation.
- If building codes require permanent wiring, Power Head must be partially disassembled to install appropriate wiring in place of Power Cord. See Figure 33-Assembly and Installation Poster.

NOTE

Permanent wiring must be installed by a Licensed Electrician. Not all Overhead Door Distributors are Licensed Electricians. Contact someone who is a Licensed Electrician.

⚠ WARNING:

NEVER use extension cords or portable generators. Extension cords can overheat causing a fire. Portable generators do not have an output compatable with PowerMax requirements.

Check Step 7: Check Safe-T-Beam® Mounting Bracket Location

Check for wood garage frame, jamb, or masonry at mounting location (6" above floor) with attachment tabs facing away from garage door (**Figure 7**).

A If you cannot mount Safe-T-Beam® Mounting Bracket to wood frame:

- Concrete screws and concrete anchors (not included) must be used to mount Brackets on masonry with attachment tabs facing away from garage door.
- Safe-T-Beam® Mounting Bracket Extensions may be used (not included - available from a Factory Authorized Dealer or through Accessories Order Form on page 21.

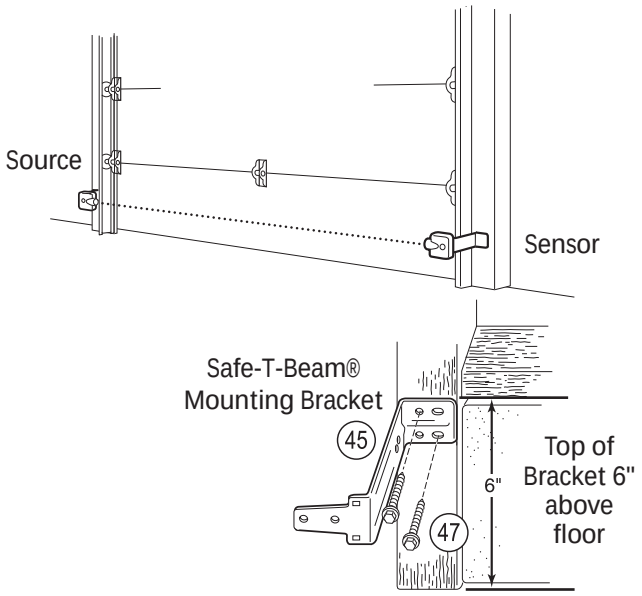

Figure 7 Mounting Safe-T-Beam® Components

Check Step 8: Recommended Tools

A Tools (**Figure 8**):

B Additional tools to make installation easier:

- Slotted and phillips screw-driver bits
- Stud finder
- Sheet-metal cutting snips

Check Step 9: Remove Existing Garage Door Locks

Check that the garage door locks, rope, and T-Handles are removed from the garage door before starting the installation.

A If your garage does not have a separate entry door, it is highly recommended to install a Emergency Release Kit (**GER-2**). Emergency Release Kit lets you open garage door from outside if there is a power failure. (Please see Accessories Order Form on page 22.)

Before going further, get any items and tools needed for your installation

- ☐ Safe-T-Beam® Sensor Mounting Bracket Extensions (dealer)
- ☐ Garage door opener reinforcement bracket (dealer)
- ☐ Garage door frame reinforcement brackets, screws, bracing or reinforcement kits (dealer)
- ☐ Lag Screws (1-1/4"or 1-1/2") for a wood door less than 2" thick (store)
- ☐ Electrical outlet and/or wiring (supplied by a licensed electrician)
- ☐ Powermax Extension Kit (for 8' garage doors) (store)
- ☐ Sufficient angle iron or strapping for hanging Power Head (store)
- ☐ Two 60 Watt light bulbs (130 Volt bulbs recommended)(store)
- ☐ GER-2 Emergency Release Kit for entry during power failure (store)
- ☐ Wood for header, ceiling, and/or door bracing reinforcement (if needed)
- ☐ Masonry fasteners for Safe-T-Beam® Bracket installation, (if needed)
- ☐ Masonry drill bit (if needed)

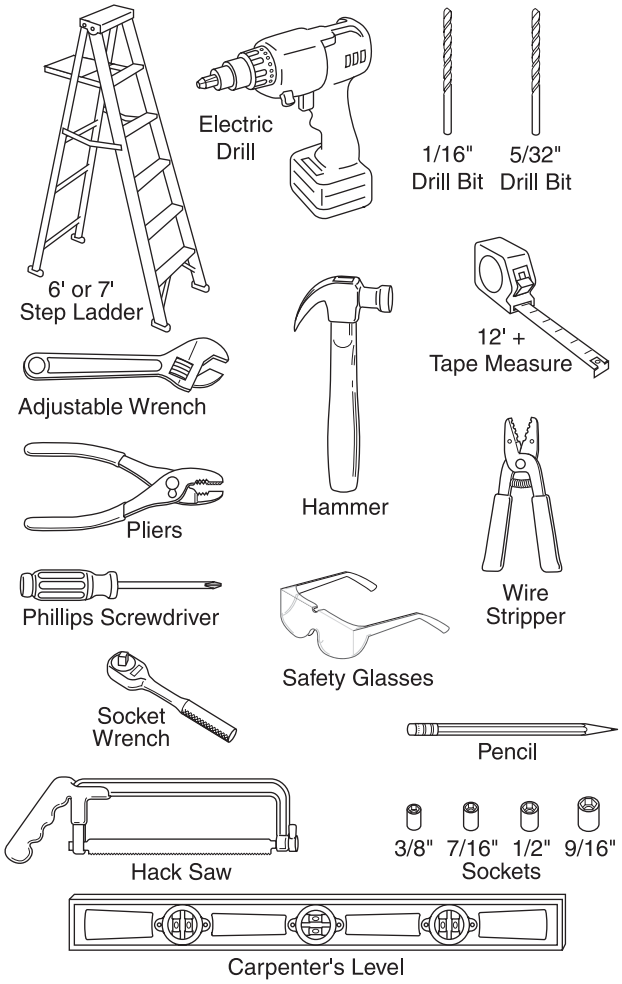

Figure 8 Recommended Tools

Adjustments and Maintenance

Adjustment 1: Set Limit Switches and Force Controls

Coarse Setting of Limit Switches

A Setting Close Limit Switch (**Figure 9**):

- Check that Magnetic Carriage Assembly is disengaged.
- With garage door fully closed, slide Close Limit Switch until it is aligned with Carriage Assembly Magnet.
- Tighten Set Screw. **Do Not** over-tighten.

B Setting Open Limit Switch:

- Manually open garage door to full open position.
- Slide Open Limit Switch until it is aligned with Carriage Assembly Magnet.
- Tighten Set Screw. **Do not** over-tighten.
- Re-engage Magnetic Carriage Assembly.

Setting Force Controls and Final Adjustment of Limit Switches

WARNING

- The garage door opens rapidly, and can cause serious injury or death.
- Keep the path clear.
- Position the ladder to the side of the Power Head so it is clear of all moving parts of the Opener and the door.
- Set the door Opener to use the minimum force needed to open the door.

A Pre-set Force Controls to midpoint between fully counter clockwise and fully clockwise (**Figure 10**).

B Adjust the Close Limit Switch:

- Press Wall Console to close garage door.
  - If door does not close completely, measure distance from bottom of door to floor. Move Limit Switch same amount toward door and try again.
  - If door reverses after contacting floor, move Limit Switch toward Power Head and try again.
  - If door reverses before contacting floor, increase Close force and try again.
  - If door fails to move, check Safe-T-Beam® System. See Safe-T-Beam® Troubleshooting Guide on pg. 15, and Opener System Self-diagnostic Troubleshooting on pg.16.
- Tighten Limit Switch Set Screw. **Do not over-tighten (strip) Limit Switch Set Screw**.

C Adjust Open Limit Switch:

- Press Wall Console to open garage door.
  - If door does not open completely, move Limit Switch toward Power Head.
  - If door opens completely, but motor continues to run, move Limit Switch toward door.
- Tighten Limit Switch Set Screw. **Do not over-tighten (strip) Limit Switch Set Screw.**

NOTE

- Little effort is required to turn the Force Adjusting Knobs.
- If the door stops moving while opening or closing, adjust the Open Force or Close Force Controls **slightly** clockwise (to **slightly** increase the force) and retry the step.
- The Open Force and Close Force Controls are to be set to the **minimum** force necessary to ensure the door smoothly opens fully and closes completely.
- The garage door will move slowly the first time it runs, until the Opener "learns" the type of door.
- Ensure the Magnetic Carriage Assembly is engaged and is between the two Limit Switches before operating the Opener.

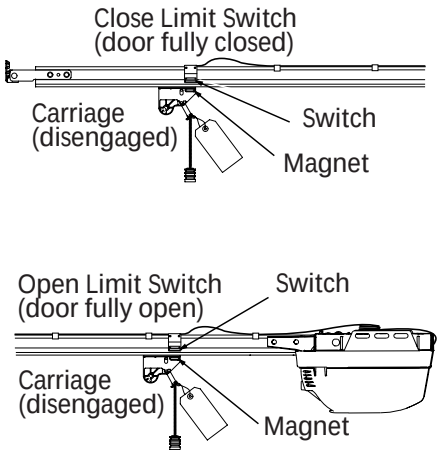

Figure 9 Setting Limit Switches

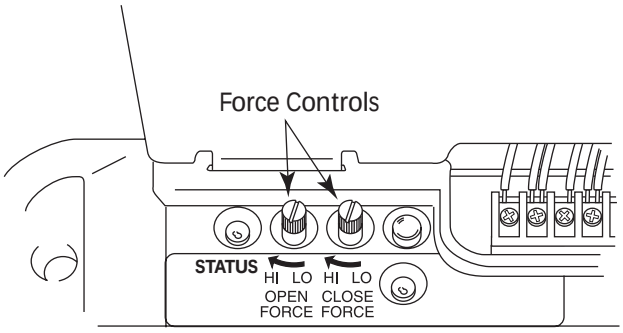

Figure 10 Making Force Adjustments

NOTE

- To protect your new investment, your opener is equipped with a Timer and Cycle Counter which work together to prevent any chance of heat damage to electrical circuits caused by too many cycles in too short a time. If your Opener suddenly stops responding to the Wall Console - **Do Not Unplug the Unit** - simply wait **10 minutes** for the Timer/Cycle Counter to reset itself and try again. (see page 16, Opener Troubleshooting).
- Unplugging the unit will prevent the Timer/Cycle Counter from resetting.

D Test Door Opener:
- Run door up and down a few times using Wall Console and observe door travel.
- Repeat steps above as needed to set Limit Switch positions.

E Adjust Open Force to minimum needed:
- Place door in closed position using Wall Console.
- Gently adjust Open Force fully counterclockwise (minimum force).
- Run Opener using Wall Console.
- Observe that door runs to Open Limit Switch.
  - If not, adjust Open Force Control slightly clockwise, close garage door, and open it again.
- Repeat steps above until garage door runs smoothly from Close Limit Switch to Open Limit Switch.

F Adjust Close Force to minimum needed:
- Place door in open position using Wall Console.
- Gently adjust Close Force fully counterclockwise (minimum force).
- Run Opener using Wall Console.
- Observe that door runs to Close Limit Switch.
  - If not, adjust Close Force Control slightly clockwise, open garage door, and close it again.
- Repeat steps above until garage door runs smoothly from Open Limit Switch to Close Limit Switch.

Adjustment 2: Setting Contact Reverse Function

NOTE

Limit Switch and Force Adjustments must be completed before checking the contact reverse function (**Figure 11**).

A Open garage door using Wall Console.

B Lay a 2" x 4" board flat in center of doorway.

C Close door using Wall Console.

D Check that door stops and reverses within 2 seconds after it contacts board:
- If door does not reverse, decrease Close Force until door reverses.
- If door still does not reverse, move Limit Switch toward door.

E Check Safe-T-Beam® System operation:
- If beam is blocked, door will not close.

NOTE

The door must contact the 2" x 4" board before the Carriage activates the Close Limit Switch. If not, readjust the Close Limit Switch.

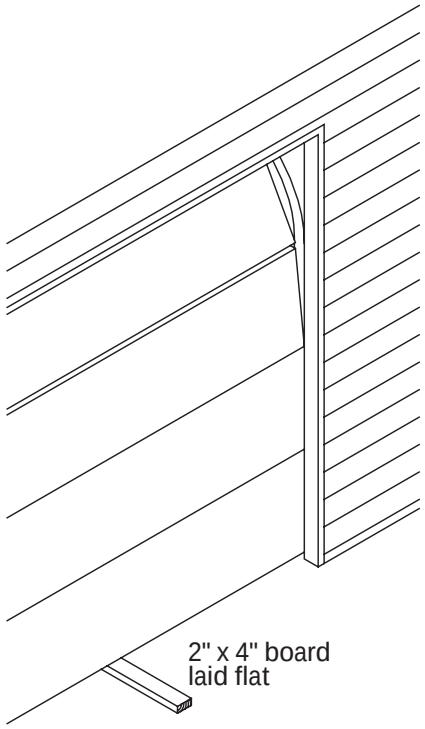

Figure 11 Checking Contact Reverse

Programming 1: PROGRAMMING THE REMOTE CONTROLS

NOTE

- Each Remote Control must be programmed separately.
- The Remote Controls will not cause the door Opener to close the garage door if the Safe-T-Beam® System is malfunctioning.
- When programming the Remote Controls, they must be at least 24" from the Antenna Wire.
- If the red Learn Indicator Light blinks approximately 4 times per second, programming has stopped. If programming has stopped, repeat the above steps.
- Each Button on a 2 or 3 Button Remote Control is for a different Opener. You cannot use more than one Button per Remote, per Opener.
- A maximum of seven Remote Controls or Wireless Keypads can be stored into the Receiver at one time. If a Remote Control becomes lost, or if you want to delete a Remote Control or Wireless Keypad, see "To Erase All Receiver Memory."

A To program one Button of a Remote Control (**Figure 12**):

- Locate Learn Button and Learn Indicator Light near Terminal Strip on Power Head (**Figure 13**).
- Press and release Learn Button. Red Learn Indicator Light will blink 2 times per second.
- Press Remote Control Button once within 30 seconds. Red Learn Indicator Light will stay lit.
- Press Remote Control Button again. Red Learn Indicator Light will go out, indicating that memory is stored.

B Program each additional Remote using step **A** above (up to seven).

To Erase All Remotes from Power Head Memory

A Press and hold Learn Button on Power Head for 10 seconds or until Learn Indicator Light goes out. Memory is erased:

- Program Transmitter/Receiver again as needed.

To Replace Remote Control Battery

A FOR NON-FLASHLIGHT MODELS

- Pop off the back of the transmitter.
  - Use coin, pen, screwdriver or any similar device.
  - Replace old Battery with new coin type battery.
- Replace back of remote.

B FOR FLASHLIGHT MODELS

- Slide open battery cover.
  - Replace old Battery with new AAA battery.
- Replace battery cover.

⚠ WARNING

A moving garage door may cause serious injury or death.

- Keep people clear of opening while door is moving.
- Do not allow children to play with the Remote Controls.

If the Safety Reverse does not work properly:

- Close the door and disconnect the Opener using the Emergency Release Cord.
- Do not use the door Opener, Remote Controls, or Wireless Keypad.
- Refer to the door and door Opener Owner's Manuals before attempting any repairs.

Remote Control Operation

A Press Button on Remote Control. Garage door will move.

B Press Button again. Garage door will stop:

- The door automatically stops at the end of the open or close cycle.

C Press Button again. Garage door will reverse.

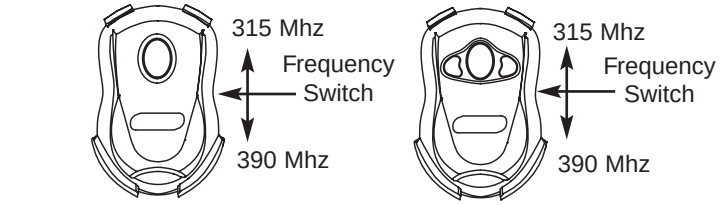

1 Button Compact Remote w/Docking Station — 3 Button Compact Remote w/Docking Station

Figure 12 Remote Controls

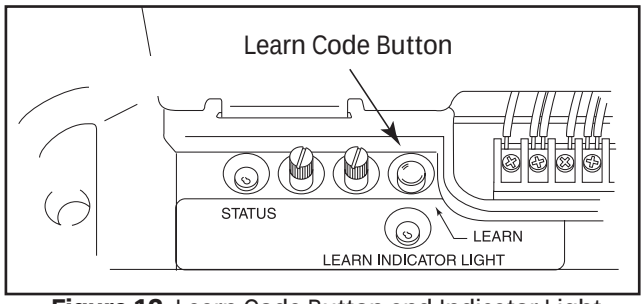

Figure 13 Learn Code Button and Indicator Light

Remote Control Operation Continued

D Some Remote Controls are equipped with a flashlight. The logo is the button which operates the light. There is a backlight under the button. When it does not light, it indicates the battery needs replaced.

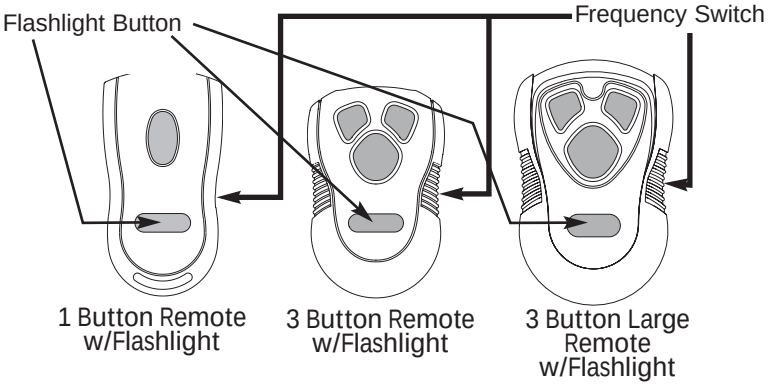

1 Button Remote w/Flashlight — 3 Button Remote w/Flashlight — 3 Button Large Remote w/Flashlight

Figure 13 Remote Controls

ABOUT DUAL FREQUENCY REMOTE TRANSMITTERS

Your garage door opener (GDO) features a unique dual frequency remote control system for reliable service in today's crowded airwaves. Overcrowded airwaves may intermittently interfere with GDO's remote control system. The dual frequency feature greatly reduces the possibility of unwanted interference.

The receiver in the GDO's powerhead can receive signals at 315 AND 390 MHz. The remote is factory set at 315 MHz. See Figure 12 and 13 on page 11 for frequency selector switch.

Switch your remote control frequency when:

- Remote does not have adequate range.
- Remote works inconsistently with fresh battery installed - LED feedback lights up when pressing button.
- Programming your car's HomeLink® system.

To program a HomeLink® device:
(This GDO is HomeLink® compatible.)

- Use a small flat screwdriver to switch the frequency selector to 390 MHz.
- Follow the HomeLink® instructions in your car owner's manual.
- Reset the remote control frequency to 315 MHz for everyday use.

Transmitter Compliance Statement

Transmitters comply with all United States and Canadian legal requirements as of the date of manufacture. No warranty is made that they comply with all legal requirements of any other jurisdiction. If transmitters are to be used in another country, the importer must determine compliance with any local laws and regulations which may differ from United States and Canadian requirements prior to use.

Los transmisores cumplen con todas las reglamentaciones legales de los Estados Unidos y del Canadá, en la fecha de fabricación. Ninguna garantía se da que cumplan con todas as reglamentaciones legales de ninguna otra jurisdicción. Si los transmisores se van a utilizar en otro país, el importador debe determinar si cumplen con las reglamentaciones y leyes locales que puedan ser diferentes a las reglamentaciones de los Estados Unidos y del Canadá, antes de usar los mismos.

Les émetteurs sont conformes à la réglementation américaine et canadienne à compter de leur date de fabrication. Aucune garantie n'est stipulée indiquant qu'ils sont conformes à toutes les prescriptions juridiques d'autres autorités. Si les émetteurs sont utilisés dans d'autres pays, il incombe à l'importateur d'en déterminer leur conformité aux lois et règles locales pouvant différer de celles des États-Unis et du Canada avant toute utilisation desdits émetteurs.

Sendegeräte entsprechen allen gesetzlichen Bestimmungen in den USA und Kanada zum Zeitpunkt der Herstellung. Wir übernehmen keine Gewährleistung für die Einhaltung aller gesetzlichen Bestimmungen in anderen Ländern. Sollen Sendegeräte in anderen Ländern eingesetzt werden, so muss der Importeur vor dem Gebrauch sicherstellen, dass die Sendegeräte auch solchen lokalen Bestimmungen entsprechen, welche von den Bestimmungen der USA und Kanadas abweichen.

截止于制造日期，传动装置符合美国和加拿大的所有法律要求。不提供传动装置符合任何其他司法地区所有法律要求之担保。如果传动装 置需在任何其他国家使用，进口商必须在使用之前确定装置符合与美国和加拿大要求不同之所有地方法规条例。

トランスミッターは、製造日付けのアメリカ合衆国及びカナダの法的条件に準拠します。しかしながら、トランスミッターがアメリカ合衆国及びカナダ以外の国の法的条件に準拠するか否かは一切保証できません。トランスミッターがアメリカ合衆国及びカナダ以外の国で使用される場合、同製品の使用に先立つ法規制がこれらの国々と異なることがあるため、輸入者は同製品が輸入国の法規制に準拠することを確認しなければなりません。

트랜스미터들은 미국과 캐나다 전역에서 제조 날짜를 명기해야 하는 요구사항에 따라야 합니다. 기타 다른 관할권의 모든 법적인 요구 사항에 따라야 하는 책임은 없습니다. 만일 트랜스미터들이 기타 다른 지역에서 사용될 경우 수입업자는 사용하기에 앞서 미국과 캐나다와의 요구사항과는 다를지도 모르는 그 지역의 법과 조례에 따라야 할지의 여부를 결정해야 합니다.

INSTALLATION OF LENS AND BULB

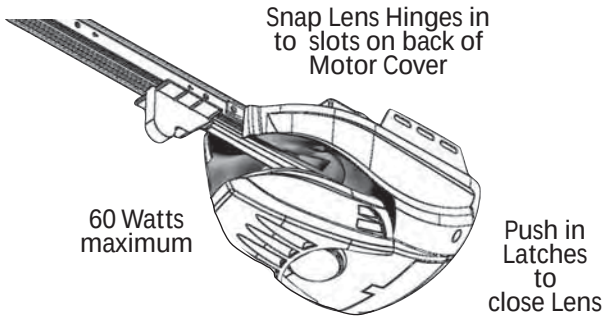

Figure 14 Install Lens Cover and Light Bulbs

A Install two 60 Watt light bulbs (not included) into Light Sockets (**Figure 14**):

- Rough service, 130 Volt bulbs are recommended.

B Install Lens into slots in Motor Cover.

Scheduled Maintenance

A Monthly:

- Door springs and door hardware:
  - Oil door rollers, bearings, and hinges using silicone lubricant or light oil.

⚠ WARNING

Do not operate door automatically or manually if springs are broken. Contact an Overhead Door Distributor for service or call Customer Service at **1-800-784-5028**.

- Balance Door.
  - Close door.
  - Release Magnetic Carriage Assembly from Rail Assembly by pulling down on Emergency Release Knob.
  - Raise door manually 3'- 4' and verify that door stays at that position. See Check Step 2 on page 5.

NOTE

When the door is 3' - 4' above the ground, the door should stay open. Slight movement is acceptable. If the door moves too much, contact an Overhead Door Distributor for service or call Customer Service at **1-800-784-5028.**

  - Reattach Magnetic Carriage Assembly to Rail Assembly by pulling the Emergency Release Knob toward Power Head.
  - Close door.
- Contact Reverse Test.
  - Perform Adjustment 2 on page 10.

⚠ WARNING

If the door fails to reverse on contact with the board, adjust the Close Force Control as specified in Set Limit Switches and Force Controls on page 20. If the Opener still fails, contact an Overhead Door Distributor for service or call Customer Service at **1-800-784-5028**.

B Yearly:

- Wipe off old excess lubricant from Drive Screw.
- Lubricate Drive Screw with Lubricant (GLU-3)

NOTE

Use ONLY Lubricant (**GLU-3**). Other lubricants may damage the Opener.

GLU-3 Lubricant

FCC AND IC CERTIFIED

All devices comply with Part 15 of the FCC Rules. Operation is subject to the following two conditions: (1) this device may not cause harmful interference, and (2) this device must accept any interference received, including interference that may cause undesired operation.

C As Needed:

- Replace Bulbs.

Notes

IMPORTANT SAFETY INSTRUCTIONS

⚠ WARNING
TO REDUCE THE RISK OF SEVERE INJURY OR DEATH

1. READ AND FOLLOW ALL INSTRUCTIONS.
2. Never let children operate or play with the Door Controls. Keep the Remote Control away from children.
3. Always keep the moving door in sight and away from people and objects until the door is completely closed. NO ONE SHOULD CROSS THE PATH OF THE MOVING DOOR.
4. NEVER GO UNDER A STOPPED, PARTIALLY OPEN DOOR.
5. Test Opener monthly. The door MUST reverse on contact with a 1-1/2" high object (or a 2" x 4" board laid flat) at the center of the doorway on the floor. After adjusting either the Force or the Limit of travel, retest the Door Opener. Failure to adjust the Opener properly may cause severe injury or death.
6. When possible use the Emergency Release only when the door is closed. Use caution when using this Release with the door open. Weak or broken springs are capable of increasing the rate of door closure and increasing the risk of severe injury or death.
7. KEEP GARAGE DOORS PROPERLY BALANCED. See your Garage Door Owner's Manual. An improperly balanced door increases the risk of severe injury or death. Have an Overhead Door Distributor make repairs to cables, spring assemblies, and other hardware.
8. **SAVE THESE INSTRUCTIONS.**

⚠ WARNING

Use the Wall Console included with Opener. Any other wall console can cause the Opener to operate unexpectedly and the light to stop working.

TROUBLESHOOTING GUIDE

Safe-T-Beam® System Self-Diagnostic Troubleshooting

Source (Red LED)	Sensor (Green LED)	Possible Problem	Solution
ON	ON	Normal operation	None required
OFF	OFF	• Power Head not powered • Wiring from Power Head bad	• Check breakers, fuses, plugs • Check wiring for obvious shorts
OFF	ON	• Wiring to Source missing or bad • Power has been interrupted	• Check wiring • Remove power and reapply
2 BLINKS, Pause (Repeat)	ON	• Beam not aligned • Beam obstructed • Sensor defective	• Check Source, Sensor alignment • Check for obstruction • Contact Customer Service
2 BLINKS, Pause (Repeat)	OFF	• Wire to Sensor missing or bad • Sensor defective	• Check wiring • Contact Customer Service
3 BLINKS, Pause (Repeat)	ON	• Sensor receiving interference	• Determine source of interference • Contact Customer Service
4 BLINKS, Pause (Repeat)	ON	• Source not sending pulses • Source defective	• Contact Customer Service • Contact Customer Service

Opener System Self-Diagnostic Troubleshooting

- **See Status Light on Figure 10, page 9 or Figure 13,page 11)**

You See	Problem	What to Do	Reference
1 BLINK, Pause (Repeat)	Motor Drive Board Interrupt	• Reset Opener—unplug (or disconnect power), wait 5 seconds, plug back in (reapply power), and activate from Wall Console.	
	Normal operation restored	• First Cycle will run at slow speed.	
	If the problem recurs	• Check door condition. **NOTE: This Opener is equipped with an automatic garage door balance detection system. An improperly balanced door, damaged or worn counter-balance spring, binding door hardware or rollers may result in a "ONE-BLINK" signal.** • Contact Customer Service for further assistance.	See Door Safety Guide
	Operation not restored	• Check door condition. • Have an Overhead Door Distributor check: – Fuse on Motor Drive Board. – Ribbon Cable on Motor Drive Board is properly inserted into Connector on Controller Board. • Contact Customer service for further service.	1. See page 5. 2. See door Safety Guide
2 BLINKS, Pause (Repeat)	Controller Board Interrupt	• Reset Opener — unplug (or disconnect power), wait 5 seconds, plug back in (reapply power), and activate from Wall Console. • Have an Overhead Door Distributor check that Ribbon Cable on Motor Board is properly inserted into connector on Controller Board. • Contact Customer Service for further assistance.	
3 BLINKS, Pause (Repeat)	**Opener Overheated or Over-cycled**	• **Do not unplug or disconnect power from Opener. Wait 10 minutes for internal clock to provide additional cycles. Cycles are restored at a rate of 5 cycles per 10 minutes of rest.** • **Contact Customer Service for further assistance.**	
4 BLINKS, Pause (Repeat)	Force Settings Incorrect	• Check Force Settings. **NOTE: Force Settings are not pre-set at factory.** • Check door condition. • Contact Customer service for further assistance.	1. See page 9. 2. See Door Safety Guide
5 BLINKS, Pause	Safe-T-Beam® Malfunction	• Check Safe-T-Beam® Self-diagnostic System. **NOTE: Safe-T-Beam® System must be installed and operational to enable door to close.** • Contact Customer Service for further assistance.	See page 15.
6 BLINKS, Pause	Wall Console does not work (Repeat)	• Check Wall Console Wiring for shorts, tight Staples, or pinched Wires. • Check Wiring Connections at Power Head and Wall Console. • Contact Customer Service for further assistance.	See Assembly and Installation Poster
7 BLINKS, Pause	Limit Switches not working (Repeat)	• Check Limit Switch Wire connections to Terminals on Power Head. • Check for shorted or pinched Wires under Limit Switch Brackets. • Contact Customer Service for further assistance.	See Assembly and Installation Poster
8 BLINKS, Pause	Wall Console locked (Repeat)	• Vacation Locking Switch on Wall Control is in "Lock" mode. Unlock switch. • Contact Customer Service for further assistance.	See Assembly and Installation Poster

NOTE

- The status LED Indicator Light is located under the Lens Cover. The Green LED light will turn ON, then OFF when power is applied to the Opener. If LED stays ON, have an Overhead Door Distributor check the Controller Board, or call Customer Service at **1-800-784-5028**.
- If Safe-T-Beam® problems exists, the door can be closed electrically by holding the Wall Console Button down until door is fully closed.
- The Remote Controls and Wireless Keypad will not work without a working Safe-T-Beam® System.

General Troubleshooting (Always Check the Status LED Light)	
Problem	**What To Do**
Opener does not run from Remote Control	**1**. Check power source. A. If Opener is connected to an outlet: • Plug a working lamp into outlet used for Power Head. • If lamp glows, power source and outlet are OK. • If not, check fuse or circuit breaker or non-compatible GFCI. **NOTE: A licensed electrician must replace non-compatible GFCI's.** B. If Opener is connected to a wiring box: • Check that fuse is not blown, or circuit breaker is on and not tripped or off. • If still no power, have a licensed electrician check circuit and wiring. **2**. If Power Source is OK: • Check connections at Power Head Terminals (see Wall Console Installation, poster), tighten any loose connection. • Check connections at Wall Console Terminals, tighten any loose connections.
	Have an Overhead Door Distributor check the Ribbon Cable between the Controller Board and Motor Drive Board is properly connected to the Circuit Board Connectors or call Customer Service at **1-800-784-5028**.
Door Opener starts for no apparent reason	• Check Wires to ensure that they are not cut (Staples can cut insulation and short Wires). Replace any shorting Staples and shorted Wires. • Was Remote Control lost or stolen? If so, erase all Remote Control codes from Receiver's memory and reprogram for remaining remote controls. (See Erase All Receiver Memory on page 11). • Ensure that no Buttons are stuck "pushed-in" on Wall Console or any Remote Controls.
Door starts down, then stops before it is completely closed	• Check Close Limit Switch setting (see Set Limit Switches and Force Controls on page 9). Adjust as needed. • Check for shorted Wires. • Check garage door for binding.
Door starts down, then stops and goes back up	• If a new installation, check Door Arm position. • Check operation of Contact Reverse function. • Check Safe-T-Beam® System for beam obstruction or misalignment of Lenses. • Check Safe-T-Beam® System diagnostic code. • Check Close Force adjustment (see Set Limit Switches and Force Controls on page 9). Adjust as needed. • Check garage door for binding.
Door will only run closed	• Check Open Limit Switch for a short circuit and for proper wiring. • Check Open Force adjustment (see Set Limit Switches and Force Controls on page 9). Adjust as needed. • Check condition of garage door and door spring(s). • WARNING: **If you suspect a problem with the garage door hardware or springs, contact an Overhead Door Distributor for service, or contact Customer Service at 1-800-784-5028**.
Door will only run open	• Check Safe-T-Beam® System as detailed in the Safe-T-Beam® System Self-diagnostic Troubleshooting Chart (see Safe-T-Beam® System Self-diagnostic Troubleshooting Section on page 15). • Check Close Limit Switch for a short circuit and for proper wiring. • Check Close Force adjustment (see Set Limit Switches and Force Controls on page 9). Adjust as needed.
Lights will not go out	• Disconnect Wires connected to Wall Console. Check their condition and either replace or reconnect. • Until a replacement Wall Console can be obtained, disconnect Wall Console and use only Remote Controls or Wireless Keypad to operate Opener.
Door starts up, but stops before it is completely open	• Check (ensure) that garage door and Opener are in good repair, properly lubricated, and properly balanced as detailed in Maintenance Section. • WARNING: **If you suspect a problem with the garage door hardware or springs, contact an Overhead Door Distributor for service, or contact Customer Service at 1-800-784-5028**. • Check Open Limit Switch for a short circuit and for proper wiring. • Check Open Force adjustment (see Set Limit Switches and Force Controls on page 9). Adjust as needed.
Operator runs, but door does not move	• Ensure Magnetic Carriage Assembly is engaged to Rail Drive Screw (see Install Magnetic Carriage Assembly onto Rails on poster). • Check Force adjustment (see Set Limit Switches and Force Controls on page 9). Adjust as needed. • Check that all sections of Rail Drive Screw are turning when Motor runs. If not: – Check condition (not cracked, split, or broken) and placement of Coupler. Replace as needed. – Check condition (not cracked, split, or broken) and placement of Collar and Clip. Replace as needed.
Wall Console Vacation Lock function does not work	• Ensure Magnetic Carriage Assembly is in contact with Close Limit Switch. • Check when door is fully closed, that Carriage activates Close Limit Switch. If not, adjust position of Close Limit Switch (See page 9).

General Troubleshooting (Always Check the Status LED Light)(Continued)	
Problem	**What To Do**
Remote Control has less than 25' operating range	• Relocate Remote Control inside car. • Ensure Remote Control is pointing toward garage door when pressing Control Button. • Replace Remote Control Battery (See page 11). • Reposition Opener Antenna Wire. • **Do Not** attempt to retune Remote Controls or Receiver.
Opener works from Wall Control, but not from Remote Control	• Program code for each Remote Control into Receiver memory (See Programming the Remote Control on page 11. • Replace Remote Control Battery (See page 11). • Check Safe-T-Beam® System for beam obstruction or misalignment of Lenses. • Check Safe-T-Beam® System for any diagnostic codes. If present, troubleshoot as detailed in Safe-T-Beam® System Self-Diagnostic Troubleshooting Chart (See page 15).
Noisy operation	• Ensure all fasteners are tightened. • Check that the garage door and Opener are in good repair, properly lubricated, and properly balanced. (See Maintenance page 13). • WARNING: **If you suspect a problem with garage door hardware or springs, contact an Overhead Door Distributor for service, or contact Customer Service at 1-800-784-5028.**
Safe-T-Beam® System	• If an operational problem exists, Opener will not run closed. • Check Safe-T-Beam® System for beam obstruction or misalignment of Lenses. • Check Safe-T-Beam® System for any diagnostic codes. If present, troubleshoot as detailed in Safe-T-Beam® System Self-Diagnostic Troubleshooting Chart (See page 15).
Door closes, and Opener shuts down	• Check position of Wall Console Vacation Lock Switch. It must be in UNLOCKED position for Opener to open door.

Wiring Diagram

WARNING Opening Cover May Result in Electric Shock

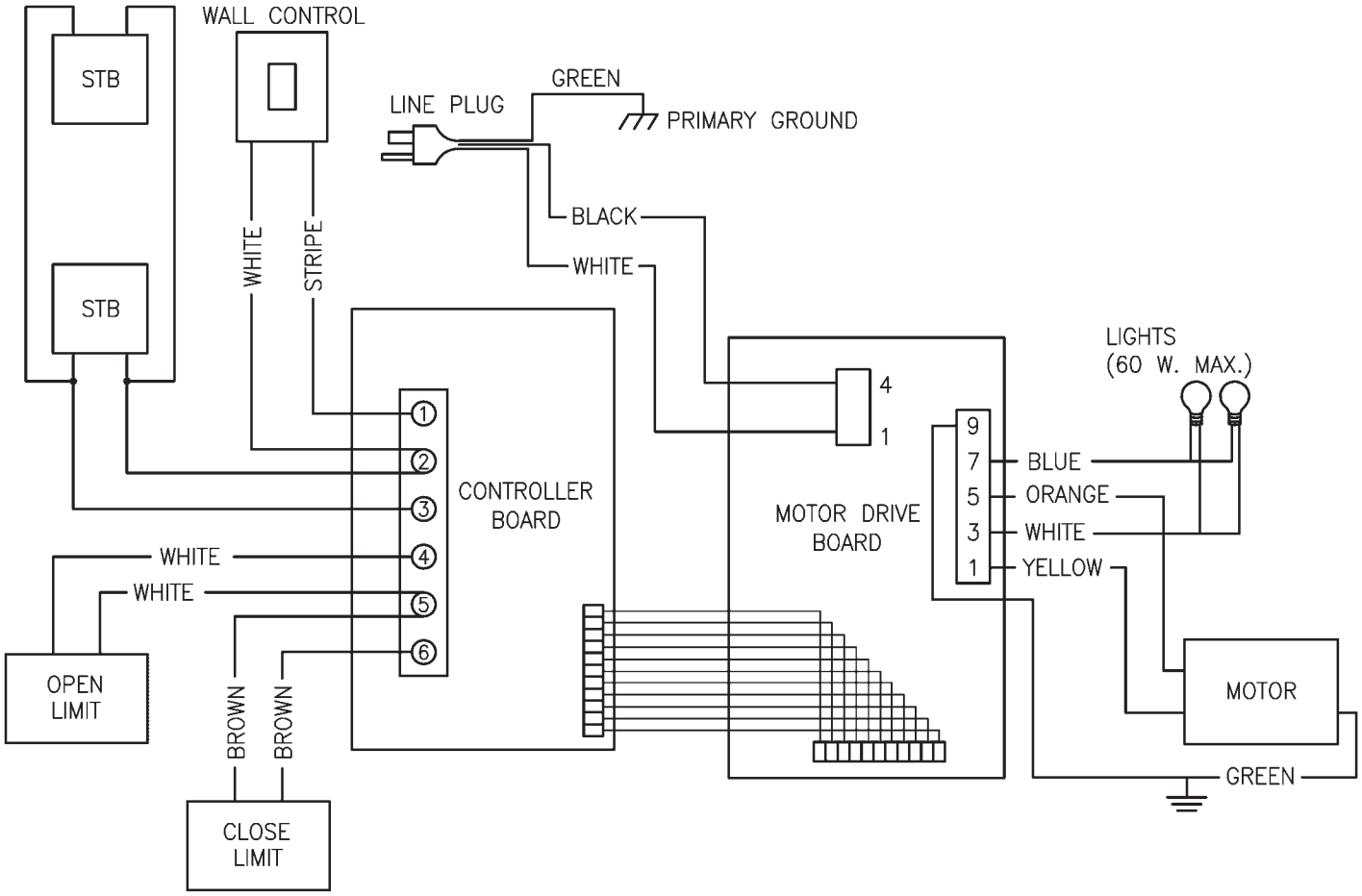

Parts List

Item	Part Name	Quantity Required
1	Power Head Assembly (main carton)	1
2	1/4"-20 x 13/16" Hex Head Shoulder Bolt (blue bag) (yellow shoulder bolt)	2
4	Rail Assembly, 3-Piece	1
4A	First Rail Section (main carton)	1
4B	Middle Rail Section (main carton)	1
4C	End Rail Section (main carton)	1
6	Carriage Stop	1
8	1/4"-20 Hex Serrated Flange Nut (blue bag)	4
9	Rail Clamps (blue bag)	4
10	5/16"-18 x 11/16" Hex Head Shoulder Bolt (blue bag)	8
11	5/16"-18 Hex Serrated Flange Nut (blue & orange bags)	12
12	Magnetic Carriage Assembly (main carton)	1
13	Collar (blue bag)	3
14	Retaining Clip (blue bag)	3
15	Rail Strap (blue bag)	1
16	1/4"-20 Hex Head Bolt (blue bag)	2
18	Open Limit Switch Assembly (White)(green bag)	1
19	Close Limit Switch Assembly (Brown) (green bag)	1
21	# 8-32 x 1" Hex Head Screw (green bag)	2
22	Emergency Release Cord (green bag)	1
24	Emergency Release Knob (green bag)	1
25	Emergency Release Tag (green bag)	1
26	Header Bracket (orange bag)	1
28	Door Bracket (orange bag)	1
30	1/4" x 2" Lag Screw (orange bag)	8
31	Straight Door Arm (main carton)	1
32	Clevis Pin, 3/8" x 15/16" (yellow bag)	2
33	Cotter Pin, .073" dia. (yellow bag)	2
34	Curved Door Arm (main carton)	1
35	3/8" x 7/8" Hex Head Bolt (yellow bag)	2
36	3/8" Hex Serrated Flange Nut (yellow bag)	2
37*	2-Conductor Wire (main carton)	1 Roll
38*	Insulated Staple (red bag)	approx. 30
40*	Wall Console (main carton)	1
41*	# 6 x 1-1/4" Pan Head Screw (red bag)	2
42*	Entrapment Warning Label (manual)(main carton)	1
43*	Safe-T-Beam Sensor (Green LED)(main carton)	1
44*	Safe-T-Beam Source (Red LED)(main carton)	1
45*	Safe-T-Beam Bracket (yellow bag)	2
46	Coupler (blue bag)	1
47*	#10 x1 1/4" Phillips Hex Head Screw (yellow bag)	varies/model
48*	One Button Remote Control (main carton)	varies/model
49*	Three Button Remote Control (main carton)	varies/model
50*	Wireless Keypad (main carton)	varies/model
51*	Two Button Remote Control (main carton)	
52*	Safety & Maintenance Guide (manual)(main carton)	1
53	Wire Clip (green bag)	7
55*	5/16"-18 x 3/4" Hex Head Bolt (orange bag)	3
56	1/4-20 x 3/4" Self-drilling Screw (orange bag)	3
57	Mounting Straps (main carton)	2

* Denotes items not shown on page 8. These items will be illustrated throughout the manual as required.

Power Head Assembly Exploded View

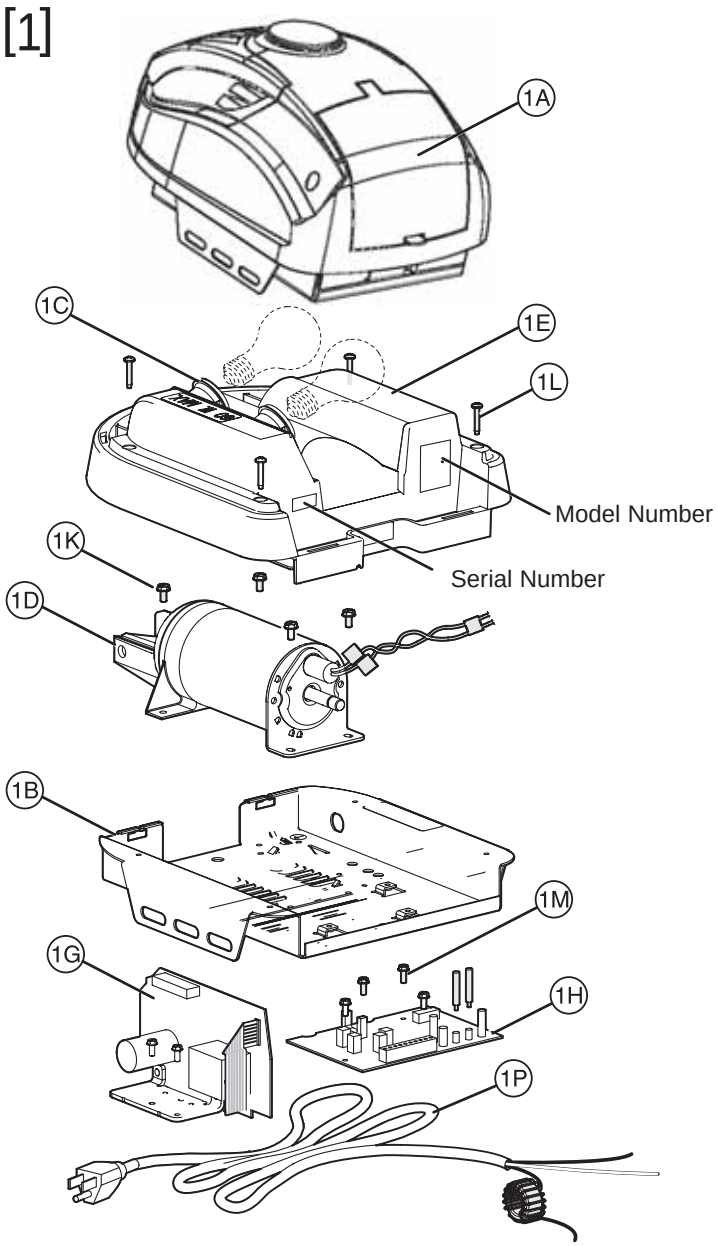

POWER HEAD ASSEMBLY PARTS LIST

Item	Part Name
1A	Lens
1B	Top Plate Assembly
1C	Light Socket (2)
1D	Motor Assembly
1E	Cover
1G	Motor Drive Board
1H	Controller Board
1K	# 10-24 x 3/8" Hex Head
1L	# 8-32 x 1" Phillips Screw
1M	# 8-32 x 3/8" Slotted Hex Head Screw
1P	Power Cord

Excelerator Hardware Exploded View

NOTE
Opener will not function unless Safe-T-Beam® System is installed and Force Controls are **properly** set.

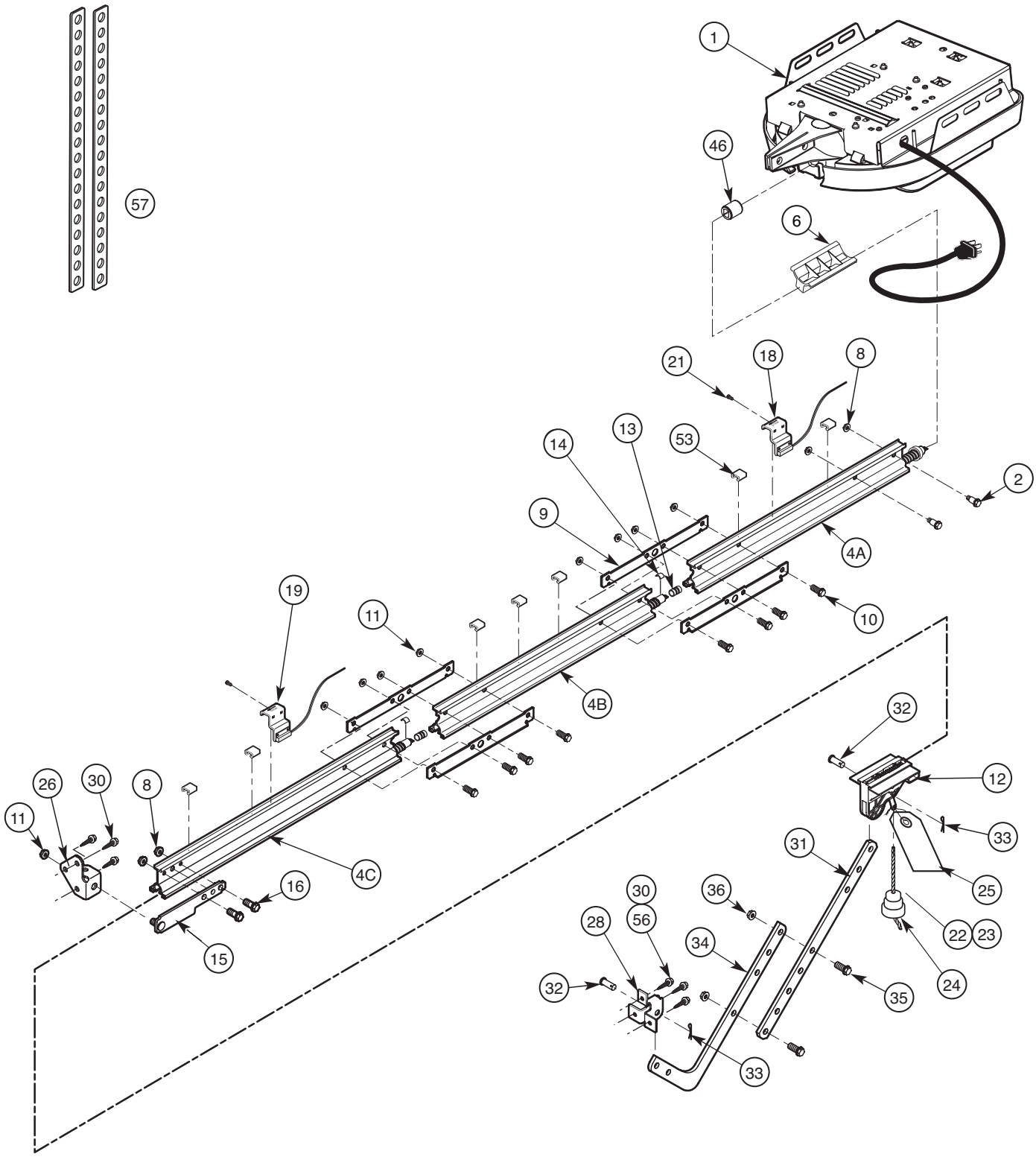

Garage Door Opener Accessories Order Form
Formulario de pedido de accesorios para abridores de puertas de garaje
Formulaire de commande des accessoires pour ouvre-porte de garage

For additional accessories not shown. visit our website at www.overheaddoor.com
Para accesorios adicionalesno mostrada, visite nuestro sitio web en www.overheaddoor.com
pour les accessoires supplémentaires pas montré, visiter notré site web à www.overheaddoor.com

How many? ¿Quántos? Comment beaucoup?

(OCD CTD-1) 1-Button Compact Remote - Allows remote operation of garage door.
Comprima el Mando de Distancia - Proporcionar operación remoto de la puerta del garaje.
Télécommande compacte - Permettre opération éloign´´de porte de garage.
P/N 35664R $36.50

(OCD CTD-3) 3-Button Compact Remote - Allows remote operation of 3 garage doors.
De 3 botones Comprima el Mando de Distancia - Proporcionar operación remoto de tres las puertas del garaje.
3-boutenner la Télécommande compacte - Permettre opération éloign´ trois portes de garage.
P/N 35664S $50.00

(OCD F TD-1) 1-Button Flashlight Transmitter - Remote Controller with a Flashlight.
1 abrocha transmisor de linterna - Director remoto con una linterna.
1-boutenner l'émetteur de lampe de poche - Le contrôleur éloigné avec de lampe de poche.
P/N 35665R $45.00

(OWC-2W) Deluxe Wall Console - Operates Garage Door. Independent light control. Security vacation lock.
Consola de lujo de pared - Acciona la puerta del garaje. Control de luz independiente. Cerradura de seguridad para vacaciones.
La Console dse luxe de Mur - Actionne la porte de garage. Commande d'éclairage indépendante. Interrupteur de verrouillage de sécurité.
P/N 35669R $35.00

(OMSWC-2W) Multi-function Wall Console with Motion Sensor - Automatically turns on garage light when you need it.
La Consola de la pared de la multi-función con Promueve Sensor - Automáticament vueltas en la luz de garaje cuando usted lo necesita.
La Console Multifontions de Mur avec Fait signe le Détecteur - Allume automatiquement la lumière de garage quand vous avez besoin de lui.
P/N 35746R $39.00

(OWKPD) Dual Frequency Wireless Keypad - Operates CodeDodger® Garage Door Openers without Remote Control or key.
La frecuencia doble teclado numérico radiofónico - Acciona los abridores de puertas de garaje CodeDodger® sin control remoto o llave.
Frequency double le clavier numérique sans fil - Actionne les ouvre-porte de garage avec CodeDodger® sans télécommande ni clé.
P/N 35668R $50.00

(GLU-3) 3/4 oz. Tubes Screw Drive Lubricant - Ensures proper equipment wear protection.
3/4 once Lubricante de tornillo accionar - Asegura componente correcto protección por deterioro.
La onza 3/4 Lubricant de la vis - Garantir componant exact par systéme défense vers user.
P/N 35164R $5.00

(OWB2) Universal Wall Button - Provides additional convenient inside operation of door.
Botón de pared universal - Proporciona operación conveniente de la puerta desde el interior.
Bouton mural universel - Actionne l'ouvre-porte de l'intérieur du garage.
P/N 35670R $3.75

(GPS-5) Perfect Stop® - Ensures perfect parking.
Stop Perfecto® - Asegura el estacionamiento perfecto.
Butoir Perfect Stop® - Permet de stationner à la perfection dans le garage.
P/N 34964R $4.00

(OSXL8) PowerMax Screw Drive Extension Kit - An Extension that increases the travel of the Opener to accommodate an eight foot door.
El extensión deslizante de PowerMax Screw Drive - Una extensión para aumentar la carrera de un abridor, para acomodar una puerta de 8 pies (2,43 m).
Nécessaire de rallonge du PowerMax Screw Drive - Rallonge de prolongeant la course de l'ouvre-porte pour une porte de 2,4 m (8 pi) de hauteur.
P/N 35671R $32.00

(OD8X) SilentLift Extension Kit - An Extension that increases the travel of the Opener to accommodate an eight foot door.
Juego de extensión de cadena deslizable - Una extensión para aumentar la longitud de la baranda para acomodar una puerta de 8 pies (2,43 m).
Nécessaire de prolongement du coulisseau - Rallonge de prolongeant la course de l'ouvre-porte pour une porte de 2,4 m (8 pi) de hauteur.
P/N 35672R $32.00

(60 WATT) Enhanced/Rough Service Light Bulb - Ensures proper equipment compatability.
Bombilla de 60 Vatios - Asegura componente correcto de sistema.
Éclairage de 60 WATT - Garantir componant exact par systéme.
P/N 26210A.S $2.73

(GER-2) Emergency Release Kit - Provides access to garage from outside in the event of an electrical power failure.
Juego de pica-porte de pestillo - Permitir entrtada desde por fuera de garaje porque corte de eléctrico.
Nécessaires de Déclenchement de secours - Le nécessaire de déclenchement de secours est conçupour vous permettre d'accéder à votre garage depuis l'extérieur en cas de panne de courant et lorsqu'il.
P/N 34963R $20.00

STB Adapter Brackets (2) - Used in conjunction with standard STB Brackets. They provide additional clearance and mounting options.
El adaptador pone entre paréntesis (2) - Usado en unión con paréntesis uniformes de montar de STB, ellos proporcionan el espacio libre adicional junto con mortar las opciones.
Crochets d'adaptateur (2) - Utilisé conjointement avec STB standard monter les crochets, ils fournissent le dégagement supplémentaire avec monter d'options.
P/N 34439R.S $4.37

Ordering Instructions

No C.O.D. shipments. Please include check or money order, made payable to **The Overhead Door Corp**. **Do not send cash**. Allow 3-4 weeks for delivery. 1-800-354-3643. Please have part number and credit card ready. Mail Order Form to: **Operator Division, 22790 Lake Park Blvd, Alliance, Ohio 44601**. We accept Visa or Mastercard on phone orders only.

Please add local sales tax if you reside in one of the states listed.

California, Connecticut, Florida, Georgia, Illinois, Indiana, Maryland, Massachusetts, Michigan, New Jersey, New York, Ohio, Tennessee, Virginia, Wisconsin

TOTAL ORDER	$
SHIPPING & HANDLING	$ 5.00
STATE SALES TAX	$
GRAND TOTAL	$

Las Instrucciones que Ordenan

No se aceptan pedidos de pago contra entrega (COD). Sírvase incluir su cheque o giro postal, la cuenta pagadera hecha a **The Overhead Door Corp**. **No envíe dinero en efectivo**. Concédanos 3 a 4 semanas para la entrega. 1-800-354-3643. Sírvase tener listos los números del modelo y de la tarjeta de crédito. Enviar hacer un pedido de mercancia a: **Operator Division, 22790 Lake Park Blvd, Alliance, Ohio 4460**. Aceptamos pedidos telefónicos de Visa o Mastercard.

Sírvase agregar el impuesto de ventas local si usted reside en uno de los siguientes estados:

California, Connecticut, Florida, Georgia, Illinois, Indiana, Maryland, Massachusetts, Michigan, New Jersey, New York, Ohio, Tennessee, Virginia, Wisconsin

TOTAL DEL PEDIDO	$
FLETE Y MANEJO	$ 5.00
IMPUESTO DE VENTAS ESTATAL	$
GRAN TOTAL	$

Instructions Commandant

Pas d'expédition contre remboursement. Veuillez inclure un chèque ou un mandat bancaire, le payable fait à **The Overhead Door Corp**. **N'envoyez pas d'argent comptant**. Accordez de 3 à 4 semaines pour la livraison. 1-800-354-3643. Ayez sous la main le numéro de la pièce et celui de la carte de crédit. Mettre à la poste le arrngement à: **Operator Division, 22790 Lake Park Blvd, Alliance, Ohio 44601**. Nous acceptons les commandes par téléphone avec paiement par carte de crédit Visa ou Mastercard.

Veuillez indiquer les taxes de vente locales si vous résidez dans l'un des états répertoriés ci-dessous.

California, Connecticut, Florida, Georgia, Illinois, Indiana, Maryland, Massachusetts, Michigan, New Jersey, New York, Ohio, Tennessee, Virginia, Wisconsin

COMMANDE TOTALE	$
MANUTENTION ET EXPÉDITION	$ 5.00
TAXE DE VENTE	$
TOTAL GLOBAL	$

SHIP ORDER TO:
ENVIAR MERCANCIA CON:
EXPÉDIER MARCHANDISE POUR:

NAME / NOMBRE / NOM

ADDRESS / DIRECCIÓN / ADRESSE

CITY / CIUDAD / VILLE

STATE / ESTADO / ÉTAT

ZIP / CÓDIGO POSTAL / CODE POSTAL

(Prices subject to change without notice)
(Valoran el cambio con sujeción a sin nota)
(Les prix assujettissent pour changer sans la notification)