RESIDENTIAL WALL MOUNT OPENER INSTALLATION, PROGRAMMING, OPERATION, TROUBLESHOOTING & MAINTENANCE MANUAL

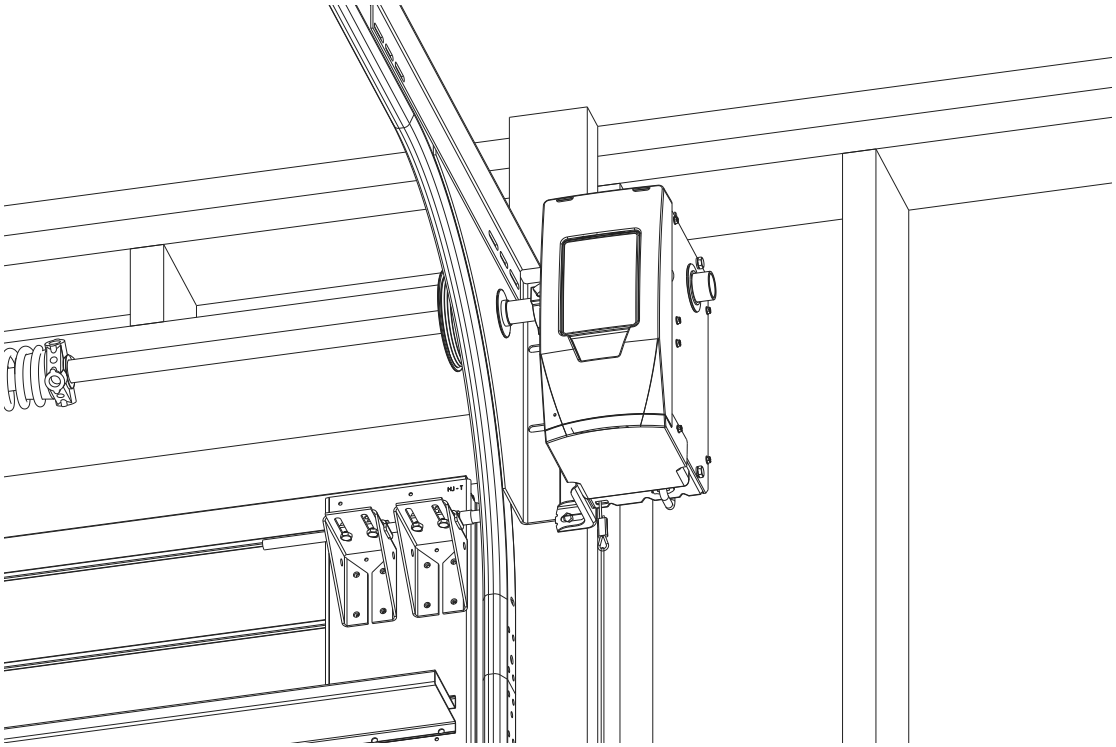

DO NOT use photocells from other manufacturers or openers with this opener.

INSTALLER: ***LEAVE THIS MANUAL WITH HOMEOWNER***
HOMEOWNER: ***SAVE THIS MANUAL FOR FUTURE REFERENCE***

⚠ WARNING

To reduce the risk of injury to persons or damage to property, use this opener only with a residential sectional door with front torsion springs.

- **RETRANSLATE** **⚠ AVERTISSEMENT**

Por reduire le risque de blessures ou de dommages materials, utillsez cet ouvre-porte uniquement pour une porte a section re sidentielie.

SERIAL NUMBER DECAL

iDCM SERIAL NUMBER DECAL

39947503927, 06/2019

INDEX

Section Information Page

1 **Standard & Safety Features:** 1

2 **Safety & General Information:**
Introduction 2
Safety Notifications 2
Important Installation Instructions 3

3 **Opener Installation:**
Pre-Installation Measures 4
Pre-Installation Permanent Input Wiring 5
Installing Cable Keepers 6
Installing Opener 7-9
Installing Door Lock 10

4 **Install and Wire Opener and Accessories:**
Wire Door Lock 11
Install and Wire Safe-T-Beam® 12
Install Wireless Wall Console 13
Install LED Light System 13
Install and Wire Optional Wired Wall Console 14
Install and Wire Optional External Interlock 14
Install Bottom Cover 14
Apply Power to Opener 15

5 **Programming Opener and Accessories:**
Introduction 16
Setting Down Limit 17
Setting Up Limit 18
Setting Force Control and Contact Reverse 19
Programming additional Remote Controls 20
Programming Accessories:
Wireless Keypad* 21
Programming Vehicle Controls* 22-23
Programming Aladdin Connect® 24-25

6 **Special Installation Information:**
Clearing Remote/Accessory Memory 26
Locating Safe-T-Beam® Pairs 27
Safe-T-Beam® Troubleshooting 27
Changing Drum Size Setting (speed) 28
Changing Force Settings 29
Installing the Battery Back up 30
Adding and programming Bluetooth® accessories 31

7 **Maintenance:**
Important Safety Instructions 32
Regular Maintenance Schedule 33
Door Inspection & Maintenance 33
Remote Battery Replacement 33

8 **Troubleshooting & Led Signals** 34-36

9 **Replacement Parts** 37-39

10 **Dasma Information** 40-41

SAVE THESE INSTRUCTIONS

READ AND FOLLOW ALL INSTRUCTIONS

Scan this code for a video of this installation
or visit: **www.geniecompany.com**

** Abbreviated versions. See instructions that accompany Accessory or Vehicle owners manual for full details, WARNINGS, CAUTIONS and instructions.*

FCC Part 15.21 Statement:
Changes or modifications not expressly approved by the party responsible for compliance could void the user's authority to operate the equipment.

FCC / IC Statement:
This device complies with FCC Part 15 and Industry Canada licence-exempt RSS standard(s). Operation is subject to the following two conditions: (1) this device may not cause harmful interference, and (2) this device must accept any interference received, including interference that may cause undesired operation of the device.

Le présent appareil est conforme aux CNR d'Industrie Canada applicables aux appareils radio exempts de licence. L'exploitation est autorisée aux deux conditions suivantes : (1) l'appareil ne doit pas produire de brouillage, et (2) l'utilisateur de l'appareil doit accepter tout brouillage radioélectrique subi, même si le brouillage est susceptible d'en compromettre le fonctionnement.

1 STANDARD AND SAFETY FEATURES

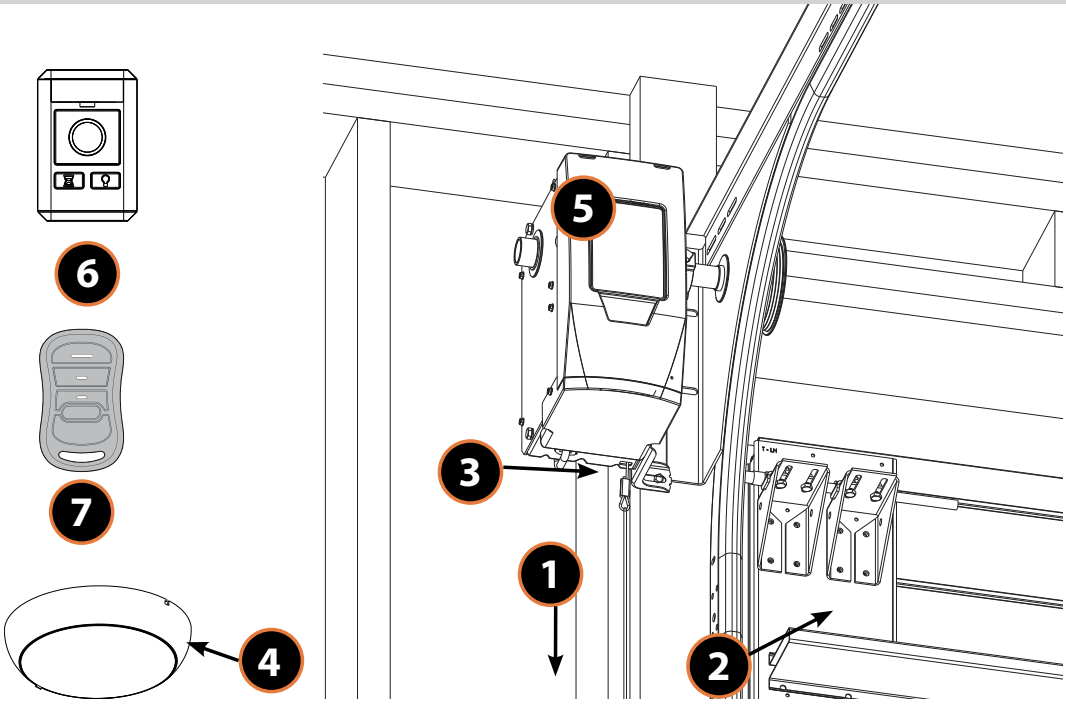

Vehicle Compatible

1. Safe-T-Beam® (STB) Non-Contact Reversing System:

- Places an infrared beam across the door opening.
- Only affects the DOWN travel of the door.
- Stops an open door from closing or reverses a door while in the down travel.
- Reversing system can be overridden with constant pressure on the wired wall console only.
- The door will stop and reverse to the full open position if beam is obstructed.
- Self-diagnostic LEDs on STBs and Powerhead alert to operational issues (See *Locating Safe-T-Beam® Pairs & Troubleshooting* section in this manual for more information).

2. Contact Reversing System:

- Force control automatically reverses a closing door upon contact with an obstruction.

3. Manual Emergency Release pull handle & cord:

- Manually releases door from door opener. Used during a power failure or other emergency to allow manual opening and closing of the door.

4. Automatic Bluetooth® Lighting System:

- Lighting system turns ON when door is activated and automatically turns OFF 4 minutes later.
- Can be activated/deactivated manually from the wall console.

5. Integrated Aladdin Connect™ (iDCM):

- Available with select models, allows operation of the garage door opener with a secure mobile device application (app) from Aladdin Connect™.

6. Wireless Wall Console:

- Wireless Wall Console operates door opener from inside garage with an open/close button.
- Manual light control and override.
- OPEN/CLOSE Delay button. Ads an operation delay. Press once for 10 seconds, twice for 20 seconds, three times for 30 seconds.

7. Intellicode® Encryption, Factory Programmed Remote(s) :

- An encryption system that enhances the security of the door opener by continuously changing the access code each time the remote is used.
- Factory programmed remote control(s) included with this opener.

Not Shown- Battery Backup (Included on select models) :

- Mounts to bottom of opener and provides power for opener operation during power outages.

OVERVIEW OF POTENTIAL HAZARDS
READ THIS SAFETY INFORMATION

Garage doors are large, heavy objects that move with the help of springs under high tension and electric motors. Since moving objects, springs under tension, and electric motors can cause injuries, your safety and the safety of others depend on you reading the information in this manual. If you have questions or do not understand the information presented, call your nearest trained door system technician or visit our website at www.geniecompany.com

CONVENTIONS USED IN THESE INSTRUCTIONS

The following safety alert symbol and signal words are used throughout this manual to call attention to and identify different levels of hazards and special instructions.

This is the safety alert symbol. This symbol alerts you to potential hazards that can kill or hurt you and others. All safety messages will follow the safety alert symbol and the word **"DANGER", "WARNING",** or **"CAUTION".**

- **DANGER** indicates an imminently hazardous situation which, if NOT avoided, will result in death or serious injury.
- **WARNING** indicates a potentially hazardous situation which, if NOT avoided, could result in death or serious injury.
- **CAUTION** indicates a potentially hazardous situation which, if NOT avoided, may result in injury or property damage.
- The word **NOTE** is used to indicate important steps to be followed or important considerations.

Tous les messages concernant la sécurité seront indiqués après un symbole d'alerte de la sécurité et l'une des mentions suivantes "**DANGER**", "**AVERTISSEMENT**" ou "**MISE EN GARDE**".

- **DANGER** signale une situation dangereuse imminente qui, si elle n'est pas évitée, risque d'entraîner des blessures graves, voire mortelles.
- **AVERTISSEMENT** signale une situation potentiellement dangereuse qui, si elle n'est pas évitée, risque d'entraîner la mort ou des blessures graves.
- **MISE EN GARDE** signale une situation potentiellement dangereuse qui, si elle n'est pas évitée, risque d'entraîner des blessures ou des dommages matériels.
- Le terme **REMARQUE** est utilisé pour signaler les étapes importantes à suivre ou d'importants éléments à prendre en considération.

IMPORTANT SAFETY INSTRUCTIONS

POTENTIAL HAZARD	EFFECT	PREVENTION
MOVING DOOR	**WARNING** Could result in Serious Injury of Death	Do Not operate unless the doorway is in sight and free of obstructions. Keep people clear of opening while door is moving. Do Not allow children to play with the door opener. Do Not change opener control to momentary contact unless an external reversing means is installed. Do Not operate a door that jambs or one that has a broken spring.
ELECTRICAL SHOCK	**WARNING** Could cause Serious Injury or Death	Turn off electrical power before removing opener cover. When replacing the cover, make sure wires are not pinched or near moving parts. Opener must be electrically grounded.
HIGH SPRING TENSION	**WARNING** Could cause Serious Injury or Death	Do Not try to remove, repair or adjust springs or anything to which door spring parts are fastened such as wood block, steel brackets, cables or any other structure or like item. Repairs and adjustments must be made by a trained service representative using proper tools and instructions.

IMPORTANTES CONSIGNES DE SÉCURITÉ

DANGER POTENTIEL	EFFET	PRÉVENTION
PORTE EN MOUVEMENT	**AVERTISSEMENT** Pourrait entraîner des blessures graves voire la mort	Utiliser uniquement si la porte est en vue et libre de tout obstacle. Ne laisser personne se tenir dans l'ouverture de la porte pendant qu'elle est en mouvement. Ne pas permettre aux enfants de jouer avec l'opérateur de la porte. Ne pas modifier la commande de l'opérateur à contact momentané à moins qu'un moyen d'inversion externe soit installé. Ne pas faire fonctionner une porte qui bloque ou dont le ressort est cassé.
CHOC ÉLECTRIQUE	**AVERTISSEMENT** Pourrait entraîner des blessures graves voire la mort	Couper le courant avant d'enlever le couvercle de l'opérateur. Lorsque le couvercle doit être remplacé, s'assurer que les fils ne sont ni coincés ni près des pièces mobiles. L'opérateur doit être correctement mis à la terre.
TENSION ÉLEVÉE RESSORT	**AVERTISSEMENT** Pourrait entraîner des blessures graves voire la mort	Ne pas essayer d'enlever, réparer ni ajuster les ressorts ou toute autre pièce à laquelle le ressort de la porte est attaché, y compris blocs de bois, supports en acier, câbles ou autres articles semblables. Les réparations et les réglages doivent être effectués par technicien qualifié qui se sert d'outils appropriés et qui respecte les instructions.

IMPORTANT INSTALLATION INSTRUCTIONS

⚠ WARNING

TO REDUCE THE RISK OF SEVERE INJURY OR DEATH

READ AND FOLLOW ALL SAFETY, INSTALLATION AND OPERATION INSTRUCTIONS. If you have any questions or do not understand an instruction, call The Genie® Company.

- READ AND FOLLOW ALL SAFETY, INSTALLATION AND OPERATION INSTRUCTIONS. If you have any questions or do not understand an instruction, call The Genie® Company.
- DO NOT install opener on an improperly balanced door. An improperly balanced door could cause severe injury. Repairs and adjustments to cables, spring assembly and other hardware must be made by a trained service person using proper tools and instructions.
- Remove all ropes, and disable all locks connected to the door before installing opener.
- Where possible, install the door opener 7 feet or more above the floor. For products having an emergency release, mount the emergency release within reach, but at least 6 feet above the floor and avoiding contact with vehicles to avoid accidental release. DO NOT use emergency release cord to pull door.
- DO NOT connect the opener to the source of power until instructed to do so.
- Locate the control button: (a) within sight of the door, (b) at a minimum height of 1.53 m (5 ft) above floors, landings, steps or any other adjacent walking surface so small children are not able to reach it, and (c) away from all moving parts of the door.
- Install the entrapment WARNING label next to the wall button or console, in a prominent location. Install the emergency release handle on the emergency release cord.
- The opener must reverse when the door contacts a 1-1/2 inch high object on the floor at the center of the doorway. This is about the size of a 2" x 4" board laid flat.

IMPORTANTES INSTRUCTIONS D'INSTALLATION

⚠ AVERTISSEMENT

POUR RÉDUIRE LES RISQUES DE BLESSURES GRAVES VOIRE MORTELLES

LIRE ET SUIVRE ATTENTIVEMENT TOUTES LES INSTRUCTIONS D'INSTALLATION ET DE FONCTIONNEMENT AINSI QUE TOUTES LES CONSIGNES DE SÉCURITÉ. Si vous avez des questions ou si vous ne comprenez pas une instruction, veuillez contacter directement The Genie® Company.

- NE PAS installer l'opérateur sur une porte mal équilibrée. Celle-ci pourrait entraîner de graves blessures. Les réparations et les réglages des câbles, ensembles de ressort ou tout autre article de quincaillerie doivent être effectués par un professionnel qui se sert d'outils appropriés et qui respecte les instructions.
- Enlever toutes les cordes et désactiver toutes les verrous de la porte avant l'installer l'opérateur.
- Dans la mesure du possible, installer l'ouvre-porte à 2,1 m ou plus au-dessus du sol. Pour les produits dotés d'un cordon de déclenchement d'urgence, installer le déclenchement d'urgence mais au moins à 1,8 m au-dessus du sol en évitant tout contact avec les véhicules pour éviter qu'ils ne soient déclenchés accidentellement. NE PAS utiliser d'urgence cordon de libération pour ouvrir ou fermer la porte.
- NE PAS connecter l'opérateur à la source d'alimentation tant que l'instruction n'est pas donnée.
- Installez le bouton de commande a) à un endroit que l'on peut voir de l'embrasure de la porte; b) à une hauteur minimale de 1,53 m (5 pi) du sol — afin que les jeunes enfants ne puissent pas l'atteindre ; et c) à l'écart des
- Pièces mobiles de la porte.
- Placer l'étiquette d'AVERTISSEMENT en cas de coinçage à proximité du bouton mural ou de la console de manière à ce qu'elle soit bien en évidence. Installer la poignée du cordon de déclenchement d'urgence.
- L'opérateur doit s'inverser lorsque la porte entre en contact avec un objet d'une hauteur de 3,8 cm placé sur le sol, au centre de l'ouverture de la porte. Ceci équivaut environ à une planche de 5 x 10 cm posée à plat sur le sol.

⚠ WARNING

Opener is equipped with grounded electrical plug for your protection, and **only fits grounded electrical outlets. DO NOT** alter plug in any way! **If your have no grounded outlets, have one installed by a licensed electrician**. Opener must be properly grounded to prevent personal injury and equipment damage. **NEVER USE AN EXTENSION CORD!** Check local building codes for any requirement that you must have a permanent hard-wired connection. Permanent hard-wired connections must be performed by a licensed electrician using proper tools and instructions.

⚠ AVERTISSEMENT

L'opérateur, qui est équipé d'une prise électrique mise à la terre pour votre protection **est compatible uniquement avec des prises électriques mises à la terre. NE PAS** modifier la fiche dune quelconque manière. Si vous n'avez pas de prises mises à la terre, faites-en installer par un électricien agréé. L'opérateur doit être correctement mis à la terre pour éviter les blessures corporelles et des dommages matériels. **NE JAMAIS UTILISER DE RALLONGE!** Vérifiez les codes locaux des bâtiments pour connexions câblées permanente. Les connexions câblées permanentes doivent être effectuées par un électricien agréé qui se servira d'outils appropriés et respectera les consignes.

3 PRE-INSTALLATION MEASURES

Compatibility Considerations:

The Genie® Residential Wall Mount opener is intended for use on:

- Standard lift up to 14 feet tall, using industry standard APCO 400.8 , 400.12 and 5250.18 drums.
- Hi-lift sectional doors up to 14 feet tall and 84 inches maximum of high lift using industry standard APCO 400.54 , 5250.54 and 500.84 drums.
- Vertical lift doors up to 14 feet tall, using industry standard APCO 850.11 and 1100.18 drums.
- Doors up to 18 feet wide not to exceed 180 square feet and 850 lbs. balance weight.
- Only doors that use torsion springs with a torsion bar diameter of 1 in. solid or hollow 14 or 16 ga. tubular steel.
- Not compatible with low headroom outside hook-up, i.e. reverse wound drums.

⚠ WARNING

Garage door hardware (springs, cables, brackets, pulleys, etc.) are under extreme pressure and tension.
DO NOT attempt to repair or adjust door springs or any hardware, and **DO NOT OPERATE** garage door automatically or manually if door is improperly balanced or springs are broken.
CONTACT A TRAINED DOOR SYSTEM TECHNICIAN.

⚠ AVERTISSEMENT

La quincaillerie de la porte de garage (ressorts, câbles, supports, poulies, etc.) sont sous des pressions et des tensions extrêmes.
NE PAS réparer ni régler les ressorts de la porte ou toute autre pièce de quincaillerie et **NE PAS ACTIONNER** la porte manuellement ou automatiquement si elle n'est pas correctement équilibrée ou si des ressorts sont cassés.
CONTACTEZ UN TECHNICIEN SPÉCIALISÉ EN SYSTÈME DE PORTES

Door Inspection:

If the intended door meets the above requirements, inspect the door for proper balance and general condition.

- Raise and lower the door manually. Door should move freely and smoothly.
- Raise door manually about 3' to 4' feet from floor and let go. Door should remain stationary or slowly drift closed. FIG.A.
  If door opens or closes rapidly, **CONTACT A TRAINED DOOR SYSTEM TECHNICIAN** to have your door springs serviced.
- Disable or remove all locks and ropes attached to the door.
- Monitor the end of the torsion bar while the door is raised and lowered. It is important that there is no noticeable movement up and down or side to side. Repair if necessary, other wise opener reliability will be significantly reduced.

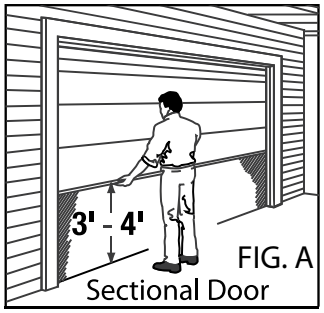

FIG. A
Sectional Door

Critical Measurements:

This opener can be installed left or right handed. Critical measurements must be taken to ensure this opener will fit the intended door.
This opener will only fit onto torsion shafts, solid or tubular, of 1 inch in diameter with or without a keyway. (X)
Measure the distance between the torsion bar centerline to the wall. This dimension must be between 2-1/2" and 6". (A)
The torsion bar shaft must protrude no less than 2-1/4" from bearing plate. (B)
A standard 115 VAC grounded electrical outlet will be required within 6 feet of the bottom of the opener.
Torsion bar centerline to the ceiling must be at least 2-1/4" for clearance. (C) Note: Headroom required is less than smallest standard drum.
End of torsion shaft to side wall clearance must be at least 7 in. for clearance (D)

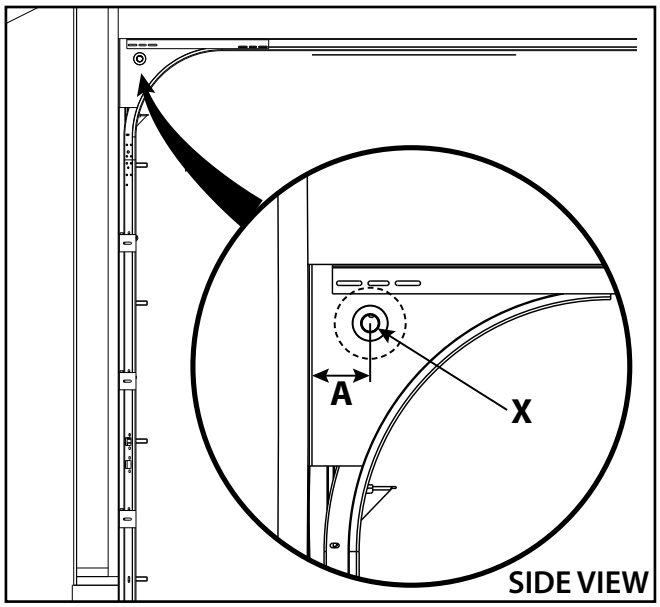

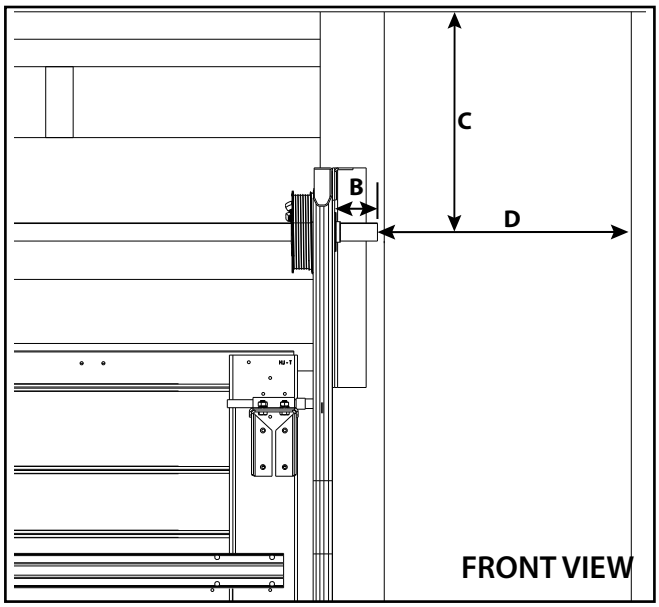

PRE-INSTALLATION MEASURES (PERMANENT WIRING)

If a 115V power outlet is not available within 5 feet of the opener when mounted to door. Permanent wiring or the EXTENDED POWER INPUT KIT may be required. This task should be performed prior to mounting opener.

PERMANENT WIRING SHOULD BE COMPLETED BY A TRAINED ELECTRICIAN ONLY:

1. Install opener per instructions on pages 6 through 9.
2. Remove two screws from bottom of cover and remove main opener cover/ circuit board assy.
3. Unplug wire harnesses from main board.
4. Unplug input power cable connector from transformer input.
5. Remove transformer from chassis.
6. Remove strain relief and pull power cable from opener.
7. Cut power cable wires and strip insulation from power cable input harness connector end.

- All wire connections must be made INSIDE CHASSIS and there must be at least 3" of new power supply line wire inside chassis.
- Check local code for the use of conduit or other protective material.
- Conduit, fittings/strain relief, and wire nuts are not provided.

8. Install 1/2in. NPT or other suitable connector into chassis. (Adhere to local electrical code(s) and regulations)
9. Connect permanent power input cable to harness wires using approved connectors or wire nuts (Adhere to local electrical code(s) and regulations)
10. Install ground connector to permanent power cable ground wire.
11. Install ground screw and power cable ground onto chassis.
12. Plug power input harness into transformer harness.
13. Install transformer.
14. Ensure input power cable and connections do not interfere with internal moving components.
15. Plug all harnesses into main control board and install cover assembly.
16. DO NOT APPLY POWER AT THIS TIME.
17. Continue installation starting on page 10.

Extended power input wire kits are available. Fully read and understand the instructions that accompany the kit before proceeding.

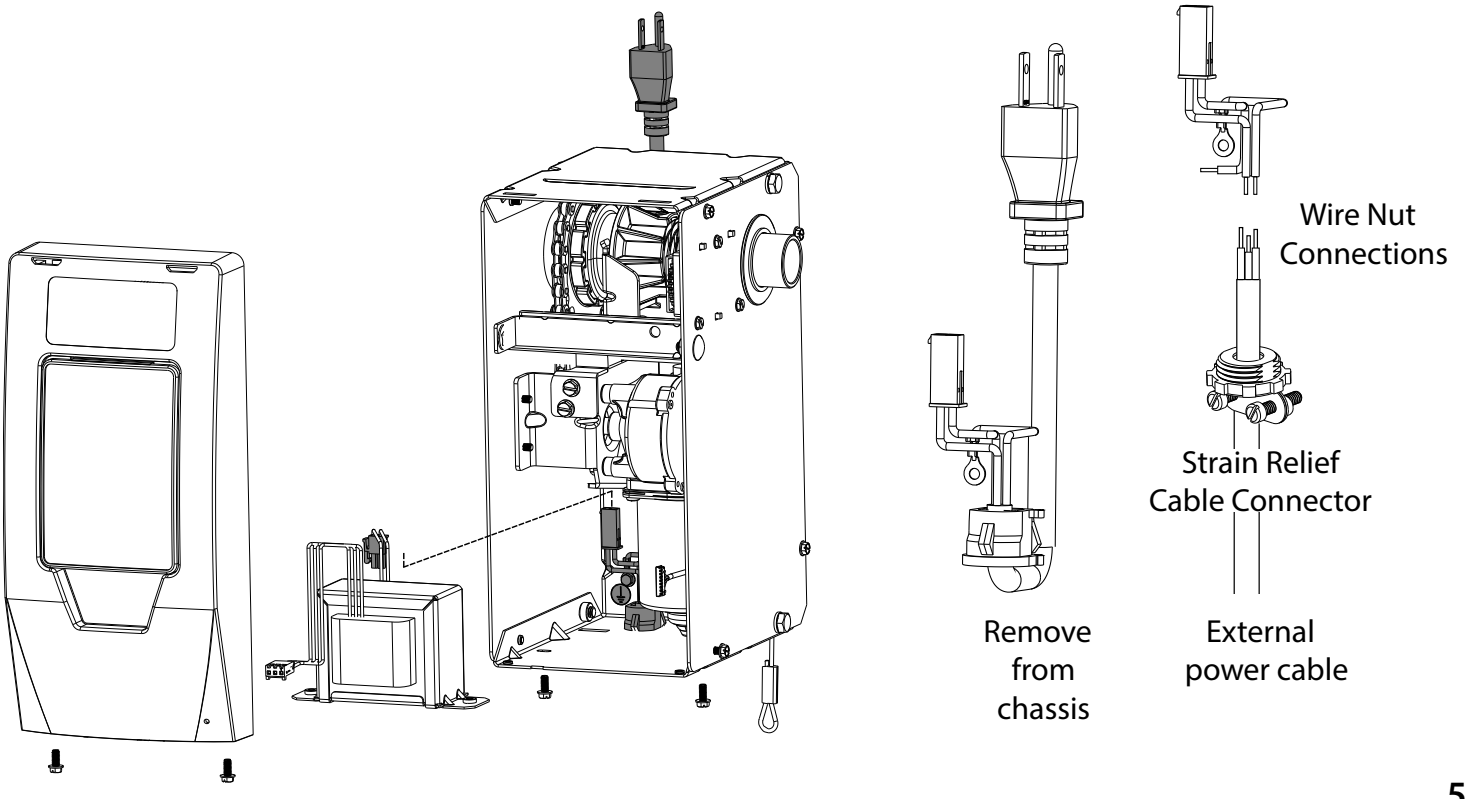

INSTALLING CABLE KEEPERS

⚠ WARNING

Operating a door with frayed or broken counterbalance lift cables can result in severe or fatal injury.
Contact a qualified door service company to replace frayed or broken cables before installing cable keepers.

⚠ AVERTISSEMENT

La quincaillerie de la porte de garage (ressorts, câbles, supports, poulies, etc.) sont sous des pressions et des tensions extrêmes.
NE PAS réparer ni régler les ressorts de la porte ou toute autre pièce de quincaillerie et **NE PAS** ouvrir la porte manuellement ou automatiquement si elle n'est pas correctement équilibrée ou si des ressorts sont cassés.
CONTACTEZ UN TECHNICIEN SPÉCIALISÉ EN SYSTÈME DE PORTES

TRANSLATE

⚠ WARNING

Do not attempt to loosen or remove bottom corner brackets. They are under extreme spring tension and can cause severe or fatal injury.

⚠ AVERTISSEMENT

La quincaillerie de la porte de garage (ressorts, câbles, supports, poulies, etc.) sont sous des pressions et des tensions extrêmes.
NE PAS réparer ni régler les ressorts de la porte ou toute autre pièce de quincaillerie et **NE PAS** ouvrir la porte manuellement ou automatiquement si elle n'est pas correctement équilibrée ou si des ressorts sont cassés.
CONTACTEZ UN TECHNICIEN SPÉCIALISÉ EN SYSTÈME DE PORTES

TRANSLATE

1. Carefully inspect the counterbalance lift cables on the door. If they are worn, frayed or broken, contact a qualified door service company to replace the counterbalance lift cables before installing the cable keepers.
2. Push spacer onto the shaft between the short stem track roller and the bottom corner bracket. Use an additional spacer if needed to achieve a minimum of 1/2" clearance.
3. If there is less than 1/2" clearance, loosen the lag screws attaching the track to the wall and adjust the track for the 1/2" clearance. Re-tighten the lag screws.
4. Position the right hand (black) cable keeper assembly directly above the garage door bottom corner bracket.
5. The cable keeper assembly must extend 1/8" past the end of the door section. Ensure there is no more than 4-1/2" from the bottom edge of the door to bottom of cable keeper.
6. IMPORTANT: RIGHT AND LEFT HAND IS ALWAYS DETERMINED FROM INSIDE THE BUILDING LOOKING OUT.
7. Fasten the cable keeper assemblies with (2) 1/4" - 20 x 11/16" self drilling screws (wood doors will use (2) 1/4" x 1" lag screws). Once the cable keeper assemblies are secured to the bottom section, place the plastic sleeve over the counterbalance lift cable and then rotate the cable keeper arm upward and attach it to the plastic sleeve.
8. Repeat the same process for the left hand (Red) cable keeper assembly.

NOTE: It is recommended that wood doors be pre-drilled with 1/8" pilot holes prior to fastening.

IMPORTANT NOTE: ***Operate door manually full open to full close and watch keeper to ensure that it does not contact door track. Adjust as necessary.***

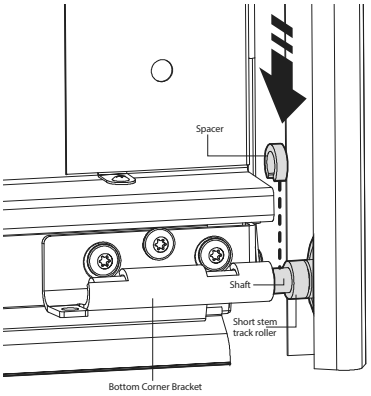

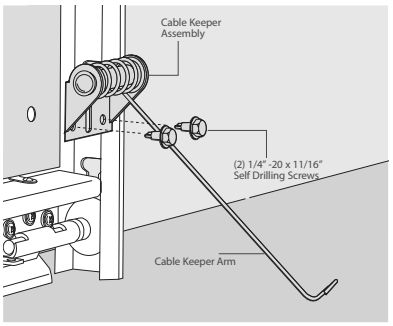

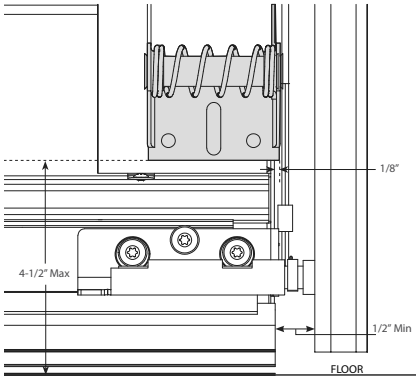

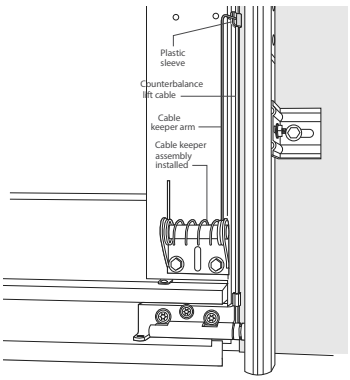

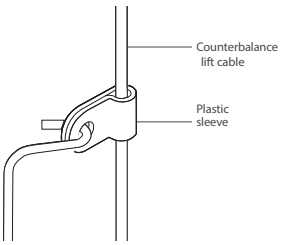

INSTALLING THE OPENER

1) CLOSE DOOR.
2) Remove bolt and lock washer (A) from powerhead chassis and loosely install mounting bracket from kit bag on desired side of powerhead. (Right Hand mount shown)

NOTE*: Bracket can be mounted to opener on either side depending on mounting requirements.*

3) Slide coupler (1-1/4" end) to opener output shaft until it fully seats. (See Coupler Cross Section detail below)
4) Tighten 3 inner set screws on coupler finger tight against opener output shaft.

NOTE: *The coupler must be installed onto the opener output shaft until the coupler seats completely to the recess inside coupler.*

NOTE: Opener MUST be mounted to garage framing material. DO NOT install to particle board or drywall.

NOTE: Alternate installation method: If dimension D (page 4) is less than 8", install coupler onto door shaft first.

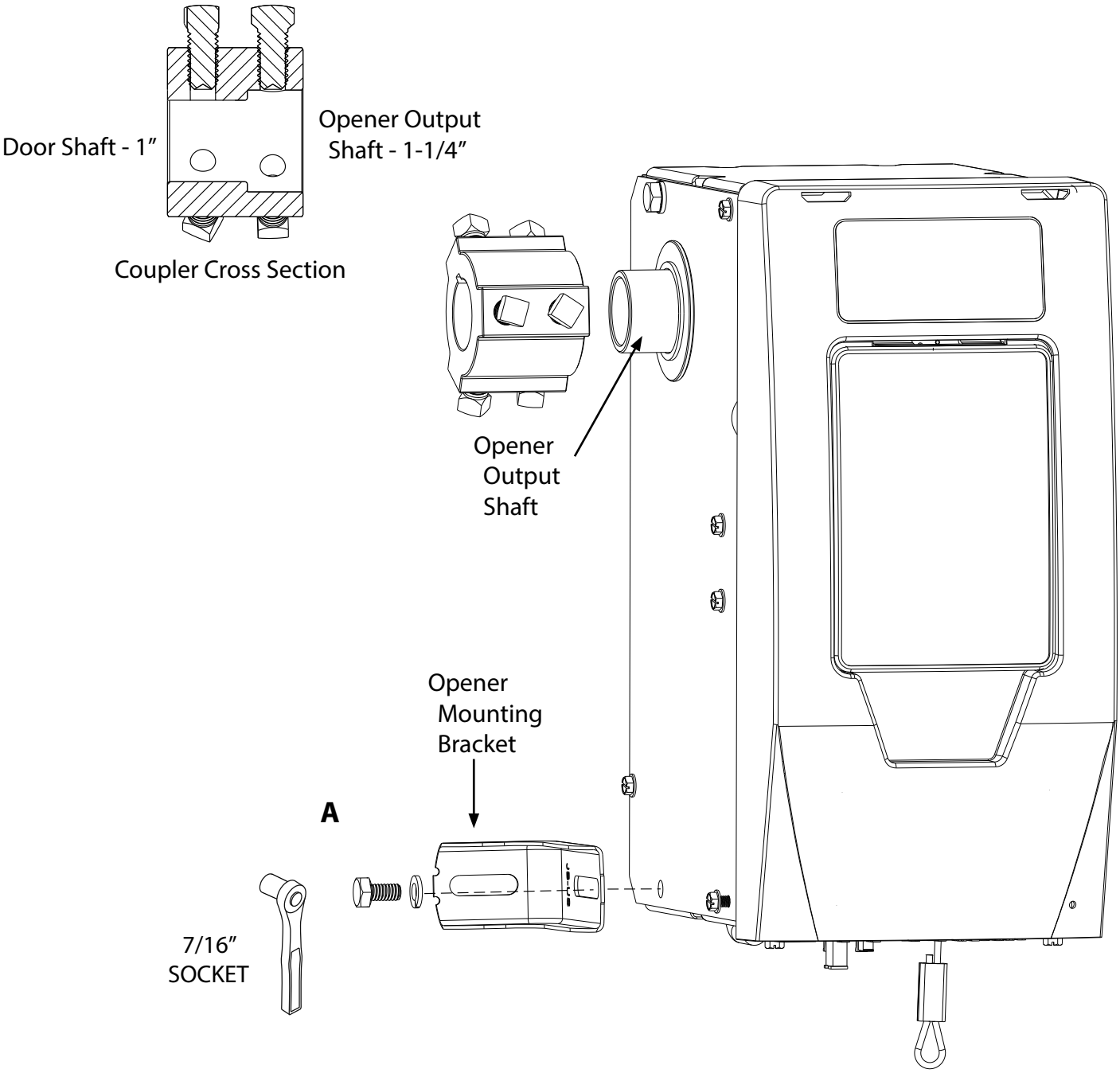

INSTALLING THE OPENER *(CONT')*

5) Mount opener to door shaft.

If the door shaft is NOT keyed, slide opener assembly onto door shaft and tighten setscrews finger tight.

If the door shaft IS keyed, insert provided key into either keyway. Pull emergency release cable at the bottom of the opener to allow free rotation of the output shaft to "clock" the keyways together.

Tighten set screws onto door shaft finger tight.

NOTE: *The mounting of this opener to the door shaft is designed so the door shaft will slide through the coupler and enter the hollow output shaft of the opener up to 3 -3/8" (there is a stop pin located in the center of the opener output shaft).*

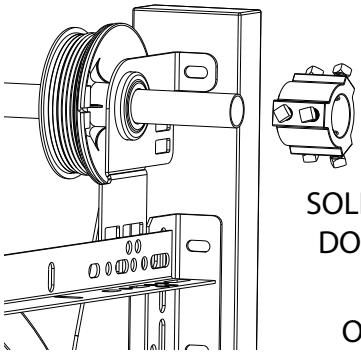

SOLID OR HOLLOW
DOOR SHAFT NO KEY

OPENER REMOVED FOR CLARITY
RIGHT HAND INSTALL SHOWN

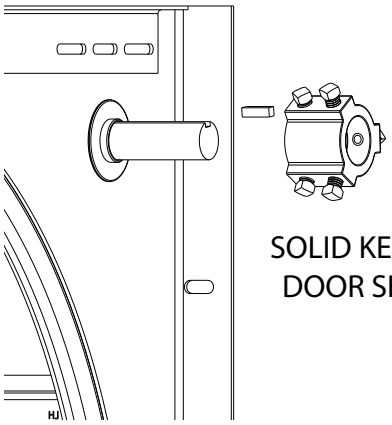

SOLID KEYED
DOOR SHAFT

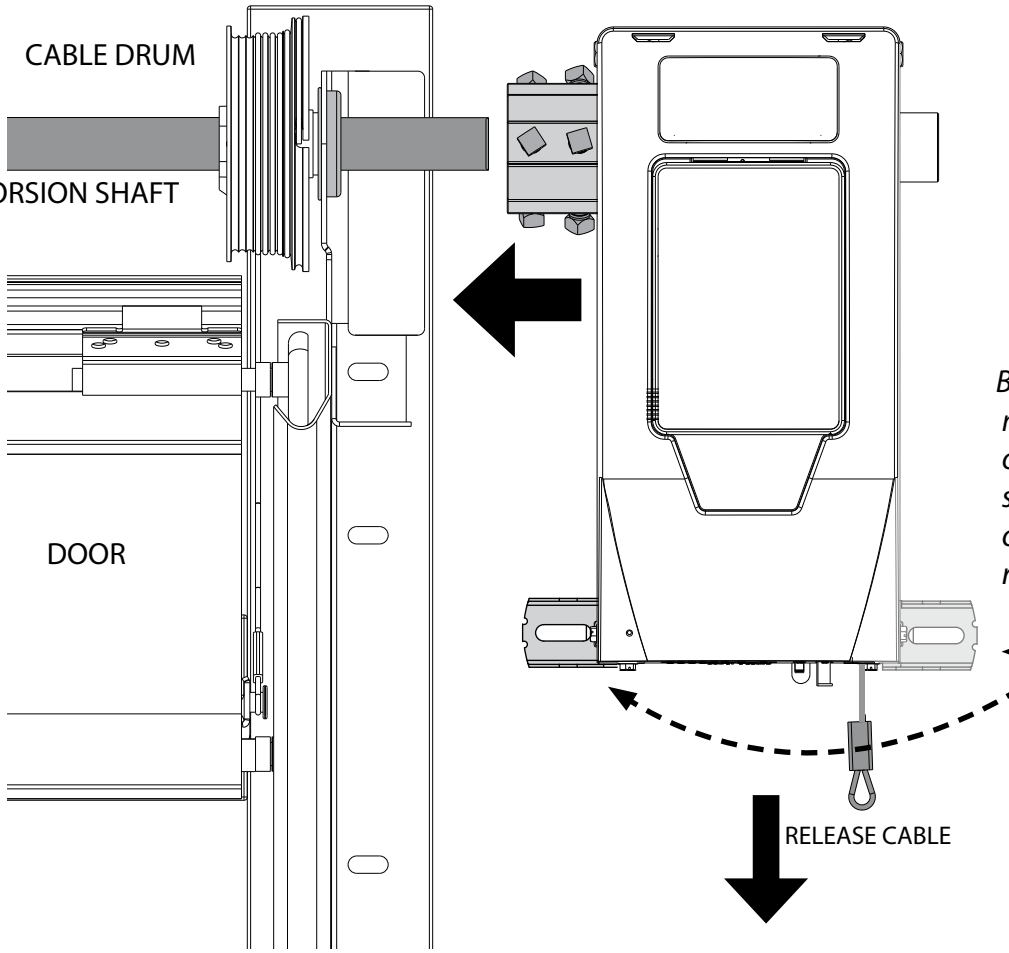

Bracket can be mounted to opener on either side depending on mounting requirements.

INSTALLING THE OPENER *(CONT')*

1) Mount opener to wall.

Level and square opener. NOTE: Vertical lift openers will not be level.

Mark mounting bracket hole position, pre-drill a 3/16" pilot hole and install lag screw and fully tighten.

Add 1 full turn to hollow tube or 1/2 turn for solid shaft on each coupler set screw in 1/4 turn increments after contacting door and opener shaft surfaces. DO NOT tighten set screws into an empty keyway.

Leave at least a 1/4" gap between coupler and door shaft bearing.

Tighten mounting bracket bolt to opener.

Pull emergency release cable and manually operate door to inspect for binding.

Tie RED emergency release cord to cable loop and tie release handle to cord approximately 5 feet from floor.

NOTE: ***Ensure all COUPLER BOLTS are secured prior to tightening mounting bracket bolt.***

NOTE: Opener MUST be mounted to garage framing material. DO NOT install to particle board or drywall.

The instructions above are provided using standard wood framing and bracing. Additional bracing may be required for this installation.

Hardware for masonry or steel construction is not provided.

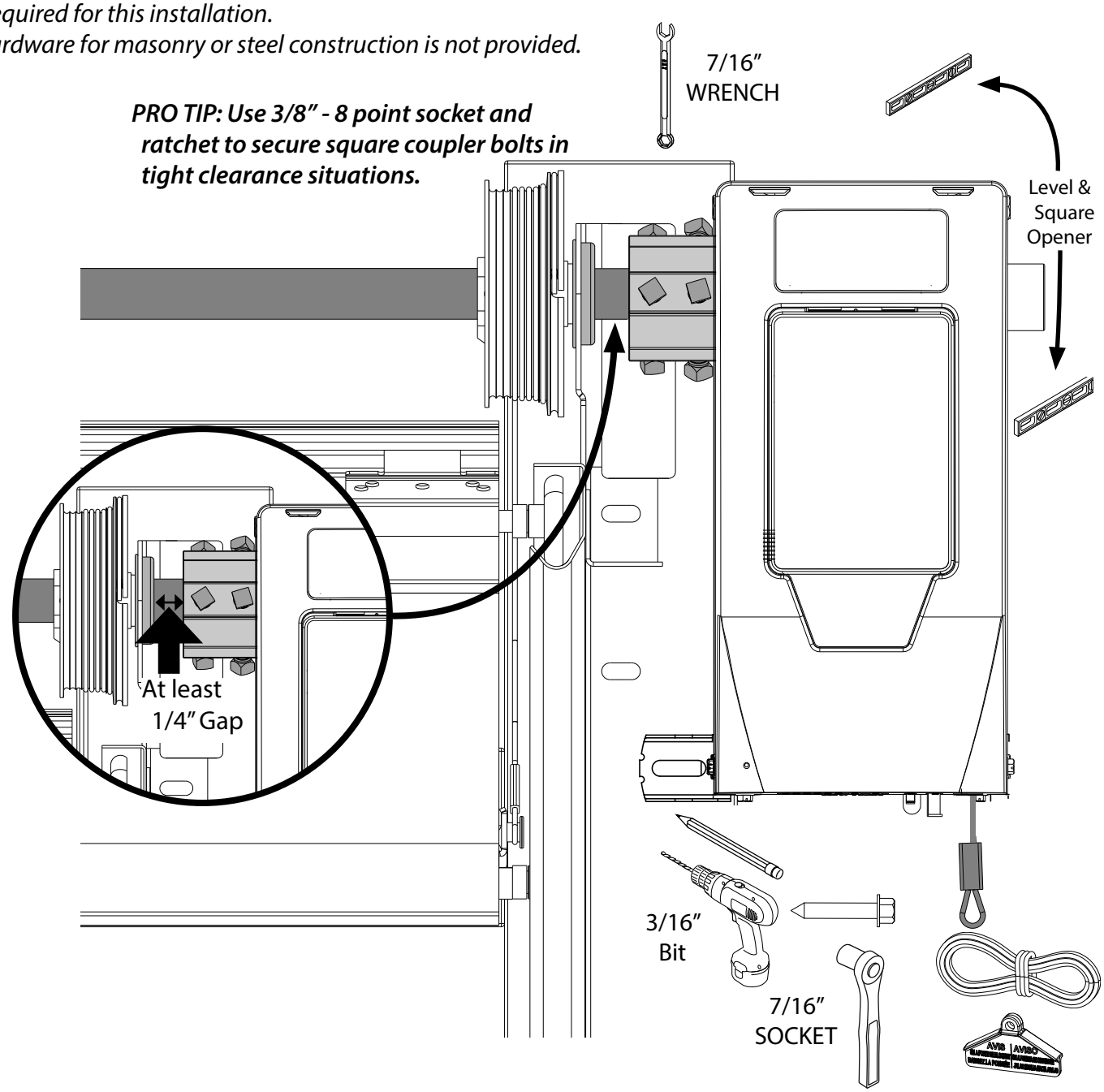

INSTALLING THE DOOR LOCK

Door lock prevents manual door operation and is key to garage security

Door lock should be installed no more than 10 feet away on the opener side of the door if possible.

1. Mount door lock onto door track above a roller on the second or third door panel from the floor.

If mounting position does not line up with pre punched door lock bar cutouts as shown below:

Cut template from the back page of the owners manual.

Tape template to the door track where the center 7/16" hole is approximately 3 inches above the door roller on the 2nd or 3rd door panel.

Drill two 9/32" holes for mounting and one 7/16" hole if using template. De-burr holes if required.

2. Position door lock and install two 1/4" X 9/16" track bolts and nuts. Install track bolt on inside of door track facing outward.

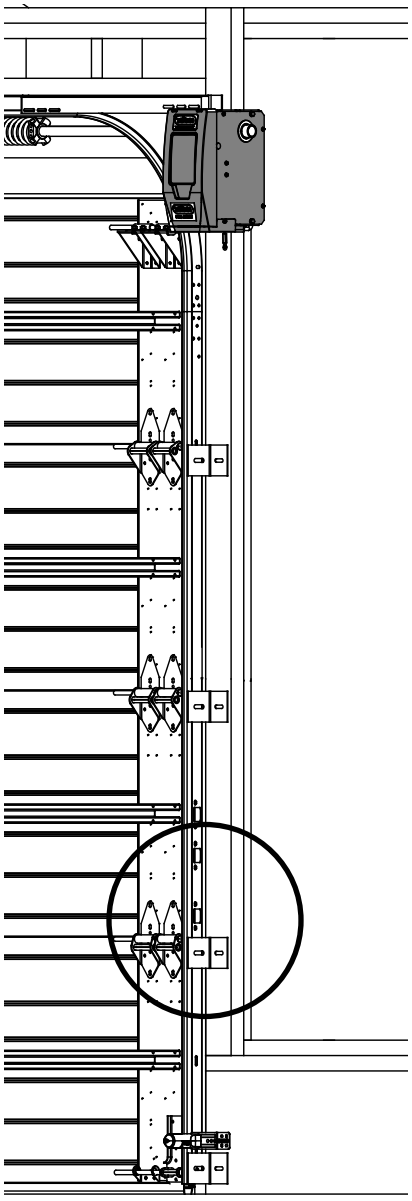

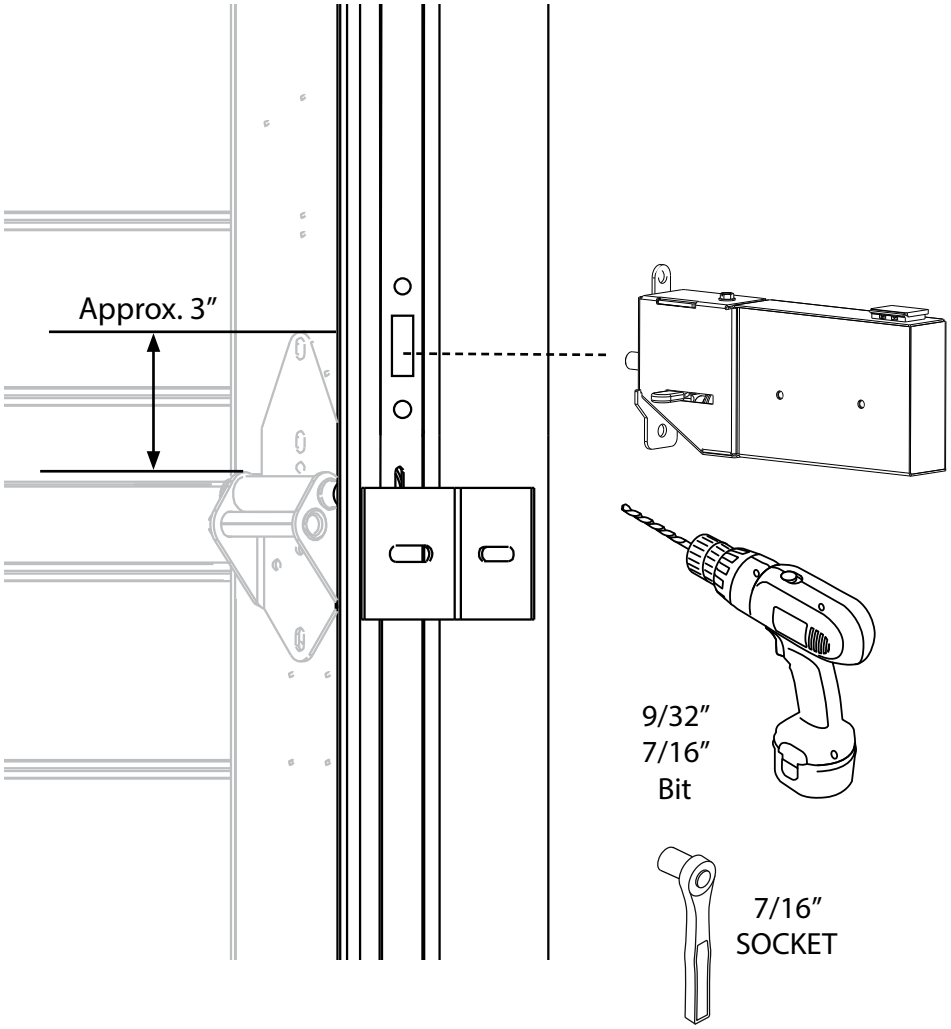

Wire Door Lock

Plug door lock harness into the LOCK plug on bottom of opener. Insert plug in correct direction (INSET)
Run wire down the wall to the DOOR LOCK and secure with supplied wire staples. NOTE that DOOR LOCK wires are polarity sensitive.
Cut off excess wire, strip 1/4" of insulation and attach to bottom connectors on DOOR LOCK.
Install WHITE wire to W terminal and STRIPED wire to B/W terminal.

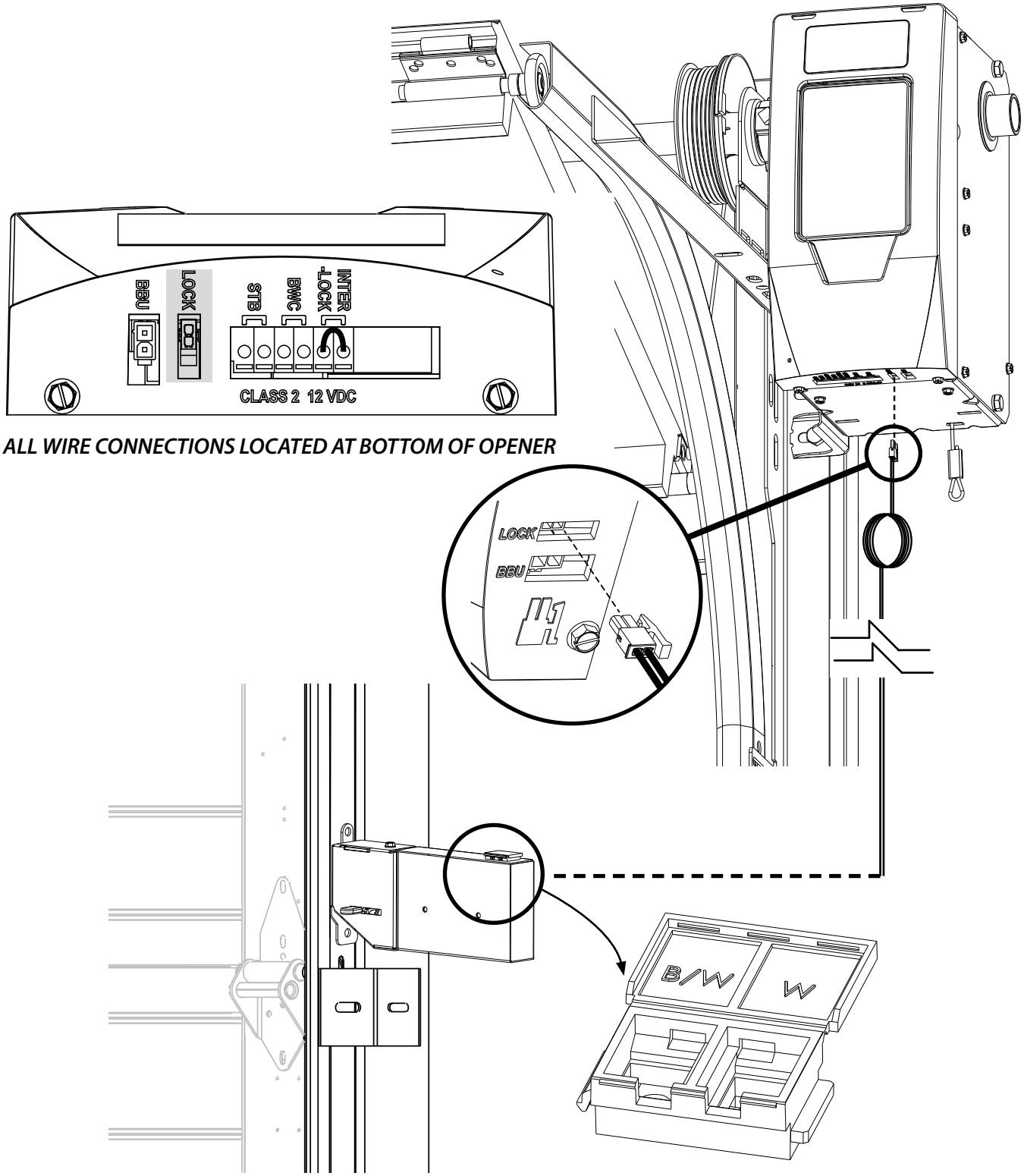

ALL WIRE CONNECTIONS LOCATED AT BOTTOM OF OPENER

Install and Wire Safe-T-Beams® (STB)

1. Position Safe-T-Beam® (STB) Transmitter and Receiver on each side of garage door 5"- 6" above floor. Face the lenses towards each other.
2. Mark bracket mounting holes; drill 3/32" pilot holes and secure with 1/4" x 1-1/4" lag screws (provided) into wood. If mounting into concrete or block, other fasteners are required and are available at leading retail stores.
3. Route 2 lengths of supplied wire from powerhead, down to one sensor and along the header and down the side of the door to the other sensor. Secure the wire to the walls using the insulated staples.
4. On the powerhead: Remove 1/4" insulation from both sets of white and striped wire. Twist two white wires together. Using a small flat head screwdriver, press in the orange tab at one STB terminal and insert the wires. Twist the two striped wires together and insert into the other STB terminal. NOTE that STB wires are not polarity sensitive.
5. At each sensor, remove 1/4" insulation from the white and striped wires and secure in each terminal.

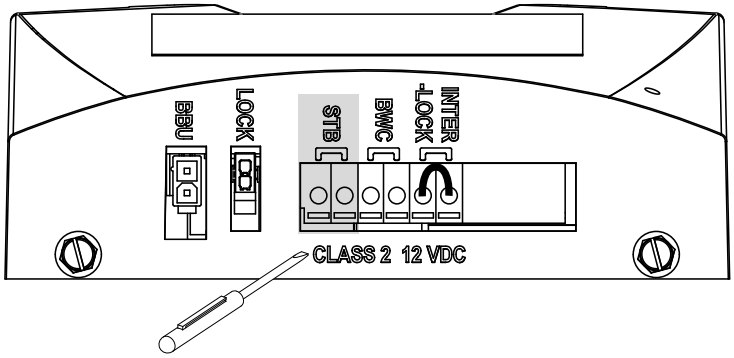

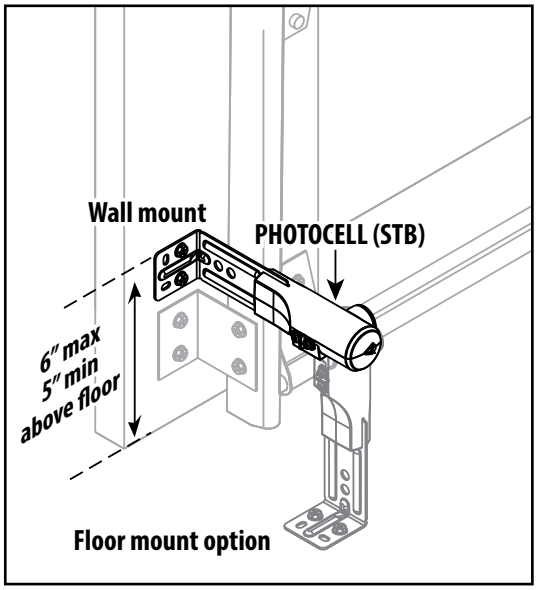

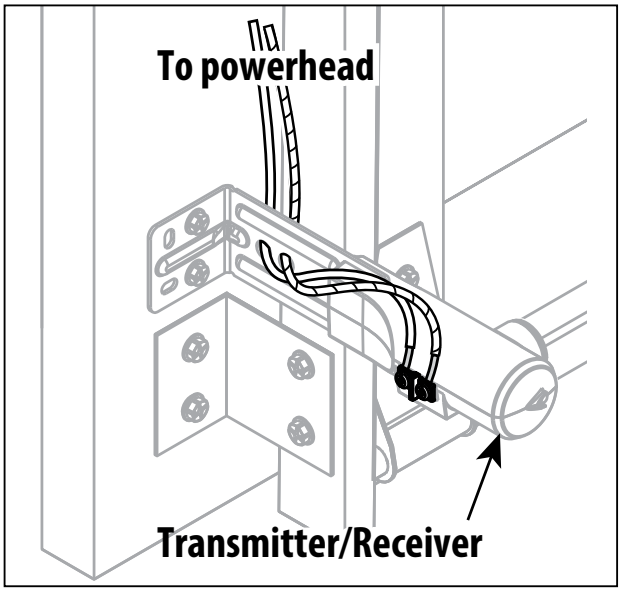

Install Wireless Wall Console

1.Determine mounting location for wireless wall console.
2.Mount console no less than 5 feet from floor to prevent small children from activating opener.
3.Pre-drill 3/32" holes for mounting screws, or 3/16" if using drywall anchors (supplied) if needed.
4.Install bottom screw leaving a 1/8" gap.
5.Slide console onto screw and down slightly to lock in place.
6.Remove upper battery door and remove protective tab and batteries.
7.Install top screw to secure console to the wall.
8.Install batteries and battery door.
9.Install warning decal in the same area as wireless wall console.

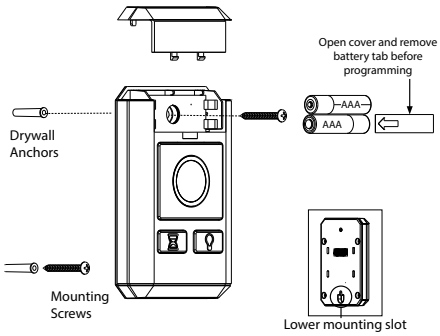

Wall Console Operation

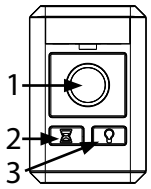

1.DOOR Button - Runs garage door opener.
2.DELAY Button - Adds a 10+ second delay for door operation. Press the delay button and door will automatically operate after set delay. Can be activated up to 3 times for a 10, 20 or 30 second delay.
3.LIGHT Button - Overrides the automatic timed light function of the garage door opener.

Install Bluetooth Light System

1.Determine mounting location within 30 feet of opener.
2.Pre-drill 3/32" holes for mounting screws, or 3/16" if using drywall anchors (supplied) if needed. 7-1/2 in. inches apart.
3.Install supplied screws leaving an 1/8" gap for mounting.
4.Route power cord through cutouts in flange and plug light into a standard 115V outlet. Secure excess wire under light housing.
5.Aline Light Kit mounting holes with screws and turn light assembly to lock into place.
6.Light kit is pre-programmed from the factory and will operate any time opener is activated and remain on for 4 minutes or overridden from wireless wall console.

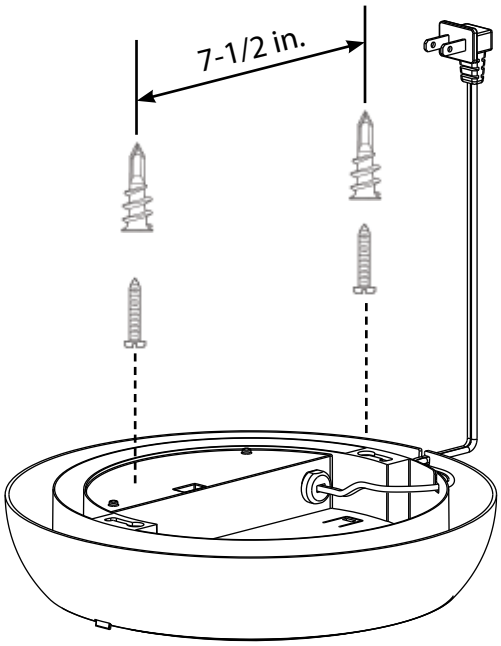

Install and Wire Basic Wall Console (Hardwired) - Optional

1. Route supplied wire from powerhead to the desired location for the hardwired wall control. Secure wire with insulated staples.
2. On the powerhead: Remove 1/4" insulation from white and striped wire. Using a small flat head screwdriver, press in the orange tab and insert the white wire in terminal 3 and the striped wire in terminal 4. (BWC TERMINALS)
3. At the wall console end of the wire, remove 1/4" insulation from the white and striped wires and secure the white wire to the "W" terminal and the striped wire to the "B/W" terminal as shown.
4. Mark the wall console mounting holes, drill 3/32" pilot holes and mount with #6 x 1-1/4" screws. If mounting to drywall, anchors will be required (not provided).

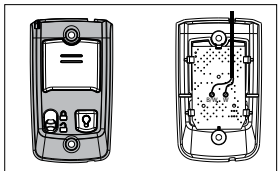

Wall Console Wires:
Striped Wire to B/W Terminal
White Wire to W Terminal

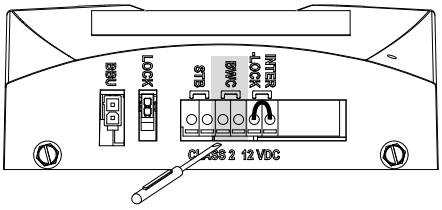

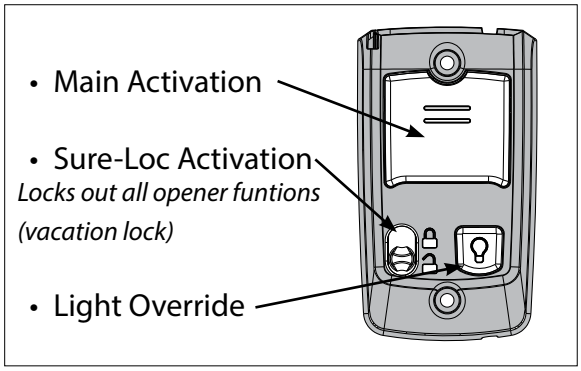

Install and Wire -OPTIONAL N/C Interlock

1. ***Do not remove factory installed interlock wire.*** This jumper is required for proper opener operation.
2. Use of any commercially available normally closed dry interlocks can be used with this opener. Using a small flat head screwdriver, press in the orange tabs at INTR-LOCK terminals and remove factory installed jumper wire and insert the interlock wires.

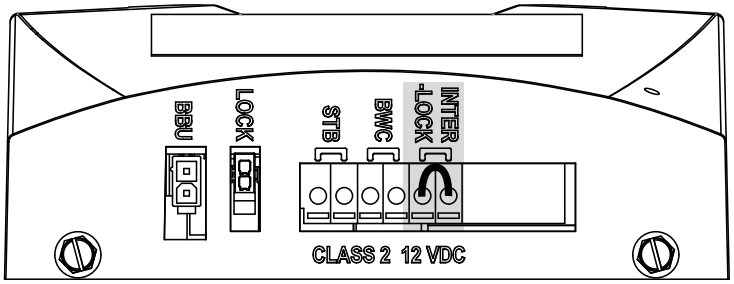

Install Bottom Cover Onto Opener - OMIT THIS STEP IF INSTALLING BATTERY BACK-UP

1. Remove two screws on the sides of opener.
2. Route wires to the rear of opener to align with slot in rear of cover.
3. Install cover with screws removed in step 1.

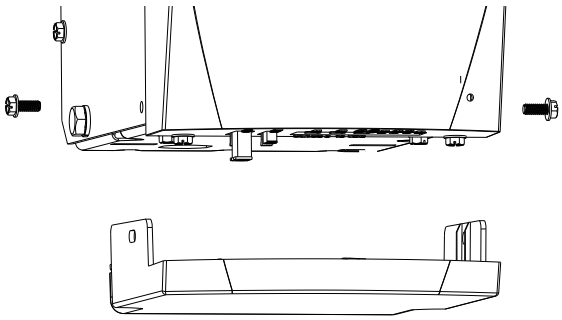

Apply power to opener

⚠ CAUTION

DO NOT run opener until travel limits have been set to avoid damage to unit.

⚠ CAUTION

NE PAS faire fonctionner l'ouvre-porte au-delà des limites de parcours pour ne pas endommager l'unité.

⚠ WARNING

Opener is equipped with grounded electrical plug for your protection, and **only fits grounded electrical outlets. DO NOT** alter plug in any way! **If you have no grounded outlets, have one installed by a licensed electrician.** Opener must be properly grounded to prevent personal injury and equipment damage. **NEVER USE AN EXTENSION CORD!** Check local building codes for any requirement that you must have a permanent hard-wired connection.

⚠ AVERTISSEMENT

L'opérateur, qui est équipé d'une prise électrique mise à la terre pour votre protection est compatible uniquement avec des prises électriques mises à la terre. NE PAS modifier la fiche dune quelconque manière. Si vous n'avez pas de prises mises à la terre, faites-en installer par un électricien agréé. L'opérateur doit être correctement mis à la terre pour éviter les blessures corporelles et des dommages matériels. NE JAMAIS UTILISER DE RALLONGE! Vérifiez les codes locaux des bâtiments pour connexions câblées permanente. Les connexions câblées permanentes doivent être effectuées par un électricien agréé qui se servira d'outils appropriés et respectera les consignes.

FOR GROUNDED OUTLET CONNECTION:

Plug in the power cord to standard 115 VAC outlet. Coil excess cord and tape or twist tie it to top of powerhead. DO NOT USE EXTENSION CORDS TO POWER THIS OPENER. Extender power input kits are available.

5 OPENER PROGRAMMING & ACCESSORY INSTALLATIONS

NOTE: *Before programming the opener, check to make sure there are no objects in the garage door opening. DO NOT allow persons to enter the area of the door while programming and operating.*

The following steps list the order of programming the opener's functional settings and install any accessories that were included with the opener or purchased separately. These steps should be performed in order.

1. Down Travel Limit
2. Up Travel Limit
3. Force Control
4. Contact Reverse test and adjustment
5. Remote Control Programming
6. Wireless Wall Console Programming

   Remote control(s), Bluetooth® Lighting System and Wireless Wall Console included with this opener are programmed at the factory. The information provided on these pages should be used if adding additional remote controls or wireless wall consoles are used.
7. Accessory Installation and/or Programming

   Program wireless keypad (If applicable)
   Program built in vehicle remote (If applicable)
   Program the Integrated Aladdin Connect™ (If applicable)
   Install Battery Backup (BBU) (If applicable)

NOTE*: When opener is activated to close, opener will start and stop slowly in small increments to detect cable tension then run at normal speed to close. This is normal operation.*

Programming Button Layout

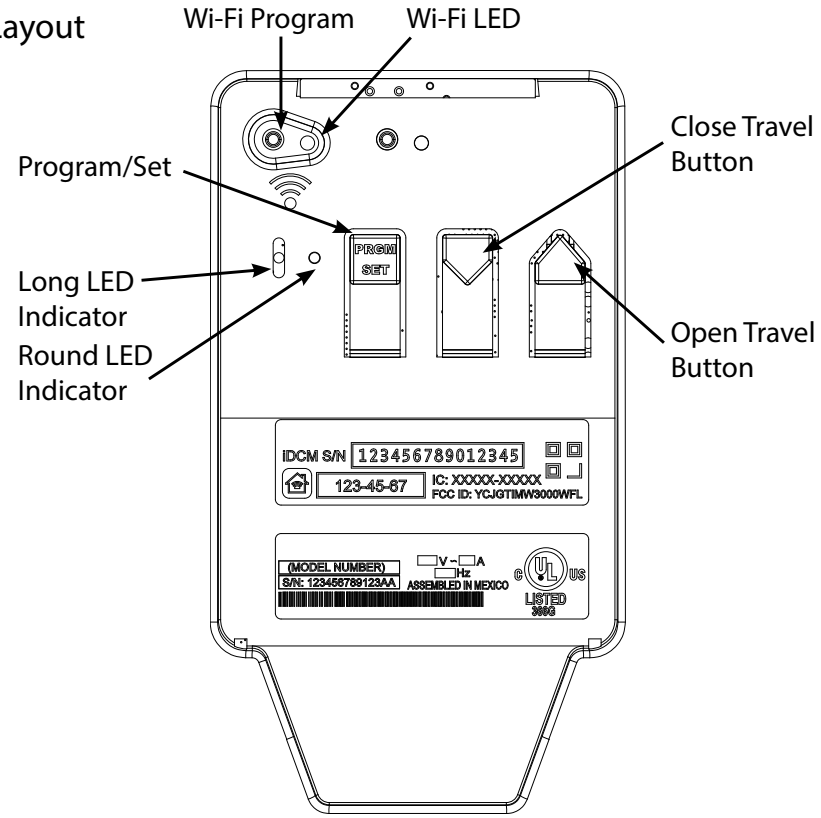

***NOTE**: Each programming step has a 30 second time limit for completion after the function is initiated. After 30 seconds, both LED's will illuminate RED indicating time has expired and the step must be restarted. Restart the step as many times as necessary to complete the programming.*

PROGRAMMING THE DOWN LIMIT

⚠ WARNING

Make sure doorway is in full view and clear of obstacles and people to avoid injury or property damage.
DO NOT operate this unit from the wall control before LIMITS are set. Severe damage to the opener could occur.
The carriage MUST be engaged to turnbuckle BEFORE setting limits. See installation poster or call Customer Service at 1-800-35-GENIE or visit www.geniecompany.com.
DO NOT set limits with Battery Backup attached. AC power MUST be connected to the opener while setting limits for proper operation.

⚠ **NOTE:** Door MUST be locked to the opener prior to programming. Door should rest somewhere between full open and closed. Do not start with door fully open or closed.

TO ENGAGE DOOR TO OPENER:
Pull release cable and release to retract cable and engage opener.

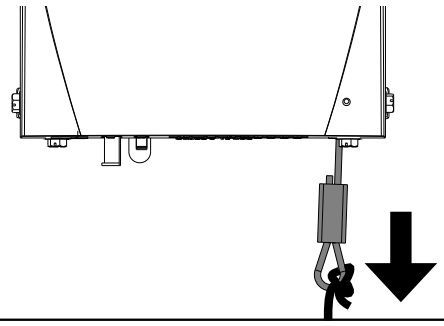

Programming DOWN Limit:

1. Press and hold the DOWN arrow button.
   Long LED will light BLUE.
2. Release DOWN arrow button.
   Long LED will flash BLUE.

3. Press and hold the DOWN arrow button until door is fully closed.
   Use the UP arrow button if door closes too far. Use both UP and DOWN buttons to adjust close travel as necessary.

Door should rest on the floor until the weather strip is compressed enough to seal along the width of the door. Damaged doors or uneven floors may not seal properly. Repair these conditions to achieve a proper seal. DO NOT compress seal so much that the door will bend or buckle.

4. Press and release the SET/PRGM button
   Both LEDs will flash BLUE then go out.

The DOWN limit is now programmed.

⚠ AVERTISSEMENT

S'assurer que le passage de la porte est visible et dégagé, à savoir sans obstacles ni personne afin d'éviter toute blessure potentielle ou dommage matériel.
NE PAS utiliser cette unité avec la console murale avant d'avoir réglé les LIMITES. L'ouvre-porte pourrait subir de sérieux dommages.
La tendeur DOIT être engagée dans le chariot AVANT de régler les limites. Voir le poster d'installation (si fourni) ou appelez le service clientèle au 1-800-35-GENIE Door ou visitez le site www.geniecompany.com.
NE PAS fixer de limites en mode batterie de secours. L'alimentation CA DOIT être branchée sur l'ouvre-porte, pendant le réglage des limites, pour assurer un bon fonctionnement.

1-2. Enter Programming Mode

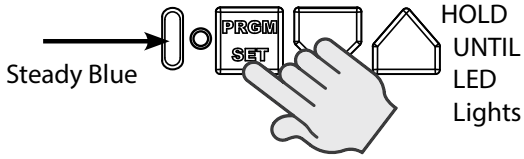

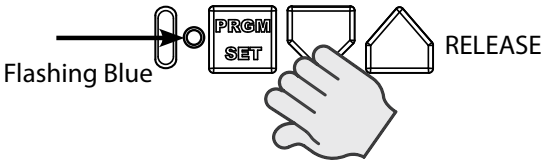

3. Adjust Door Position

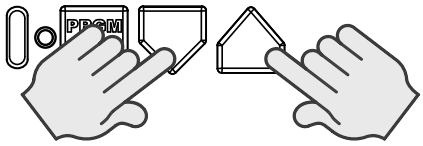

4. Lock Programming

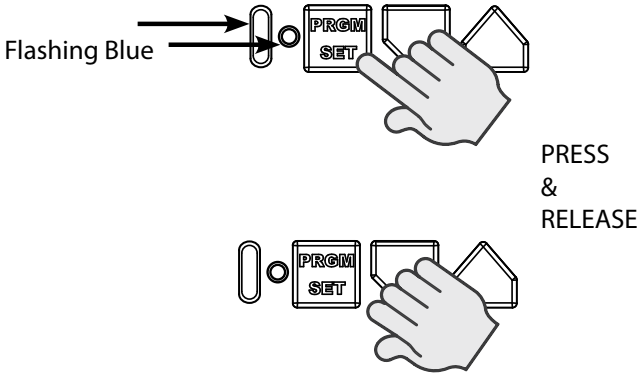

PROGRAMMING THE UP LIMIT

Programming UP Limit:

1. Press and hold the UP arrow button.
   Long LED will light BLUE.
2. Release UP arrow button.
   Round LED will flash BLUE.

3. Press and hold the UP arrow button until door is fully open.
   Use the DOWN arrow button if door opens too far. Use both UP and DOWN buttons to adjust open travel as necessary.

SECTIONAL DOOR UP LIMIT:
Door should fully open so that door seal is about even with door header. Do not adjust so much that the door will bend, buckle or stretch door spring cables backward.

4. Press and release the SET/PRGM button
   Both LEDs will flash BLUE then go out.

The UP limit is now programmed.

1-2. Enter Programming Mode

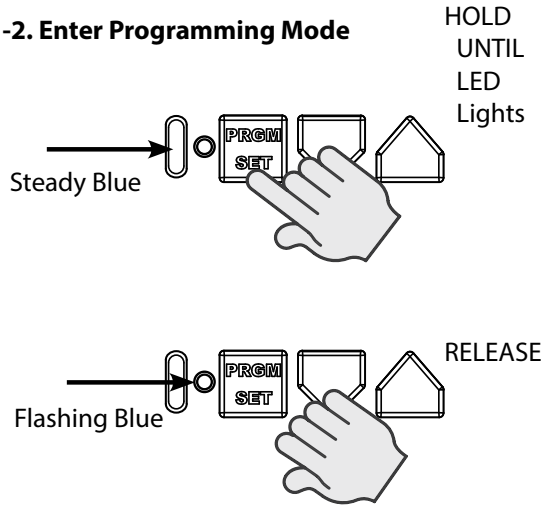

3. Adjust Door Position

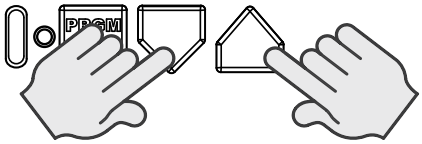
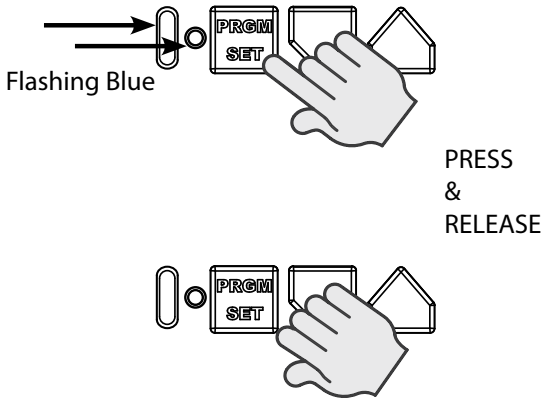
4. Lock Programming