SAR TEST REPORT

The following samples were submitted and identified on behalf of the client as:

Equipment Under Test	Tablet
Brand Name	hp
Model No.	HSTNH-I408CC
Company Name	Hewlett-Packard Company
Company Address	1501 Page Mill Road, Palo Alto, California 94304, USA
Standards	IEEE /ANSI C95.1 , C95.3, IEEE 1528, KDB248227 D01, KDB616217 D04, KDB865664 D01, KDB865664 D02, KDB941225 D01, KDB941225 D02, KDB941225 D03,
FCC ID	B94HHI408CC
Date of Receipt	Sep. 25, 2014
Date of Test(s)	Sep. 29, 2014 ~ Oct. 01, 2014
Date of Issue	Oct. 21, 2014

In the configuration tested, the EUT complied with the standards specified above.

Remarks:

This report details the results of the testing carried out on one sample, the results contained in this test report do not relate to other samples of the same product. The manufacturer should ensure that all products in series production are in conformity with the product sample detailed in this report.

This report may only be reproduced and distributed in full. If the product in this report is used in any configuration other than that detailed in the report, the manufacturer must ensure the new system complies with all relevant standards. Any mention of SGS Taiwan Electronic & Communication Laboratory or testing done by SGS Taiwan Electronic & Communication Laboratory in connection with distribution or use of the product described in this report must be approved by SGS Taiwan Electronic & Communication Laboratory in writing.

Signed on behalf of SGS

Engineer	**Supervisor**
afu Chen	Ricky Huang
Afu Chen	**Ricky Huang**
Date: Oct. 21, 2014	**Date: Oct. 21, 2014**

Unless otherwise stated the results shown in this test report refer only to the sample(s) tested and such sample(s) are retained for 90 days only.
除非另有說明，此報告結果僅對測試之樣品負責，同時此樣品僅保留90天。本報告未經本公司書面許可，不可部份複製。

This document is issued by the Company subject to its General Conditions of Service printed overleaf, available on request or accessible at www.sgs.com/terms_and_conditions.htm and, for electronic format documents, subject to Terms and Conditions for Electronic Documents at www.sgs.com/terms_e-document.htm. Attention is drawn to the limitation of liability, indemnification and jurisdiction issues defined therein. Any holder of this document is advised that information contained hereon reflects the Company's findings at the time of its intervention only and within the limits of Client's instructions, if any. The Company's sole responsibility is to its Client and this document does not exonerate parties to a transaction from exercising all their rights and obligations under the transaction documents. This document cannot be reproduced except in full, without prior written approval of the Company. Any unauthorized alteration, forgery or falsification of the content or appearance of this document is unlawful and offenders may be prosecuted to the fullest extent of the law.

Version

Report Number	Revision	Date	Memo
EN/2014/90010	00	2014/10/17	Initial creation of test report.
EN/2014/90010	01	2014/10/21	1st modification

This test report contains a reference to the previous version test report that it replaces.

Unless otherwise stated the results shown in this test report refer only to the sample(s) tested and such sample(s) are retained for 90 days only.
除非另有說明，此報告結果僅對測試之樣品負責，同時此樣品僅保留90天。本報告未經本公司書面許可，不可部份複製。

This document is issued by the Company subject to its General Conditions of Service printed overleaf, available on request or accessible at www.sgs.com/terms_and_conditions.htm and, for electronic format documents, subject to Terms and Conditions for Electronic Documents at www.sgs.com/terms_e-document.htm. Attention is drawn to the limitation of liability, indemnification and jurisdiction issues defined therein. Any holder of this document is advised that information contained hereon reflects the Company's findings at the time of its intervention only and within the limits of Client's instructions, if any. The Company's sole responsibility is to its Client and this document does not exonerate parties to a transaction from exercising all their rights and obligations under the transaction documents. This document cannot be reproduced except in full, without prior written approval of the Company. Any unauthorized alteration, forgery or falsification of the content or appearance of this document is unlawful and offenders may be prosecuted to the fullest extent of the law.

Contents

1. General Information 4
1.1 Testing Laboratory 4
1.2 Details of Applicant 4
1.3 Description of EUT 5
1.4 Test Environment 15
1.5 Operation Description 15
1.6 Proximity sensor operation description 20
1.7 The SAR Measurement System 28
1.8 System Components 30
1.9 SAR System Verification 32
1.10 Tissue Simulant Fluid for the Frequency Band 34
1.11 Evaluation Procedures 36
1.12 Probe Calibration Procedures 37
1.13 Test Standards and Limits 40
2. Summary of Results 42
3. Simultaneous Transmission Analysis 47
3.1 Estimated SAR calculation 48
3.2 SPLSR evaluation and analysis 49
4. Instruments List 56
5. Measurements 58
6. SAR System Performance Verification 65
7. DAE & Probe Calibration Certificate 69
8. Uncertainty Budget 85
9. Phantom Description 86
10. System Validation from Original Equipment Supplier 87

Unless otherwise stated the results shown in this test report refer only to the sample(s) tested and such sample(s) are retained for 90 days only.
除非另有說明，此報告結果僅對測試之樣品負責，同時此樣品僅保留90天。本報告未經本公司書面許可，不可部份複製。

This document is issued by the Company subject to its General Conditions of Service printed overleaf, available on request or accessible at www.sgs.com/terms_and_conditions.htm and, for electronic format documents, subject to Terms and Conditions for Electronic Documents at www.sgs.com/terms_e-document.htm. Attention is drawn to the limitation of liability, indemnification and jurisdiction issues defined therein. Any holder of this document is advised that information contained hereon reflects the Company's findings at the time of its intervention only and within the limits of Client's instructions, if any. The Company's sole responsibility is to its Client and this document does not exonerate parties to a transaction from exercising all their rights and obligations under the transaction documents. This document cannot be reproduced except in full, without prior written approval of the Company. Any unauthorized alteration, forgery or falsification of the content or appearance of this document is unlawful and offenders may be prosecuted to the fullest extent of the law.

1. General Information

1.1 Testing Laboratory

SGS Taiwan Ltd. Electronics & Communication Laboratory	
No.134, Wu Kung Road, New Taipei Industrial Park, Wuku District, New Taipei City, Taiwan	
Tel	+886-2-2299-3279
Fax	+886-2-2298-0488
Internet	http://www.tw.sgs.com/
Testing Location	1F, No.8, Alley 15, Lane 120, Sec .1, NeiHu Road NeiHu District Taipei City 114, Taiwan

1.2 Details of Applicant

Company Name	Hewlett-Packard Company
Company Address	1501 Page Mill Road, Palo Alto, California 94304, USA

Unless otherwise stated the results shown in this test report refer only to the sample(s) tested and such sample(s) are retained for 90 days only.
除非另有說明，此報告結果僅對測試之樣品負責，同時此樣品僅保留90天。本報告未經本公司書面許可，不可部份複製。
This document is issued by the Company subject to its General Conditions of Service printed overleaf, available on request or accessible at www.sgs.com/terms_and_conditions.htm and, for electronic format documents, subject to Terms and Conditions for Electronic Documents at www.sgs.com/terms_e-document.htm. Attention is drawn to the limitation of liability, indemnification and jurisdiction issues defined therein. Any holder of this document is advised that information contained hereon reflects the Company's findings at the time of its intervention only and within the limits of Client's instructions, if any. The Company's sole responsibility is to its Client and this document does not exonerate parties to a transaction from exercising all their rights and obligations under the transaction documents. This document cannot be reproduced except in full, without prior written approval of the Company. Any unauthorized alteration, forgery or falsification of the content or appearance of this document is unlawful and offenders may be prosecuted to the fullest extent of the law.

1.3 Description of EUT

Equipment Under Test	Tablet	
Brand Name	hp	
Model No.	HSTNH-I408CC	
FCC ID	B94HHI408CC	
Mode of Operation	☒GPRS ☒EDGE ☒WCDMA ☒HSDPA ☒HSUPA ☒HSPA+ ☒WLAN802.11 b/g/n(20M/40M) ☒Bluetooth	
Duty Cycle	GPRS	1/2 (1Dn4UP) 1/2.76 (1Dn3UP) 1/4.1 (1Dn2UP) 1/8.3 (1Dn1UP)
	EDGE	1/2 (1Dn4UP) 1/2.76 (1Dn3UP) 1/4.1 (1Dn2UP) 1/8.3 (1Dn1UP)
	WCDMA	1
	WLAN802.11 b/g/n(20M/40M)	1
	Bluetooth	1

Unless otherwise stated the results shown in this test report refer only to the sample(s) tested and such sample(s) are retained for 90 days only.
除非另有說明，此報告結果僅對測試之樣品負責，同時此樣品僅保留90天。本報告未經本公司書面許可，不可部份複製。
This document is issued by the Company subject to its General Conditions of Service printed overleaf, available on request or accessible at www.sgs.com/terms_and_conditions.htm and, for electronic format documents, subject to Terms and Conditions for Electronic Documents at www.sgs.com/terms_e-document.htm. Attention is drawn to the limitation of liability, indemnification and jurisdiction issues defined therein. Any holder of this document is advised that information contained hereon reflects the Company's findings at the time of its intervention only and within the limits of Client's instructions, if any. The Company's sole responsibility is to its Client and this document does not exonerate parties to a transaction from exercising all their rights and obligations under the transaction documents. This document cannot be reproduced except in full, without prior written approval of the Company. Any unauthorized alteration, forgery or falsification of the content or appearance of this document is unlawful and offenders may be prosecuted to the fullest extent of the law.

TX Frequency Range (MHz)	GPRS850	824.2	—	848.8
	GPRS1900	1850.2	—	1909.8
	WCDMA Band II	1852.4	—	1907.6
	WCDMA Band IV	1712.4	—	1752.6
	WCDMA Band V	826.4	—	846.6
	WLAN802.11 b/g/n(20M)	2412	—	2462
	WLAN802.11 n(40M)	2422	—	2452
	Bluetooth	2402	—	2480
Channel Number (ARFCN)	GPRS850	128	—	251
	GPRS1900	512	—	810
	WCDMA Band II	9262	—	9538
	WCDMA Band IV	1312	—	1513
	WCDMA Band V	4132	—	4233
	WLAN802.11 b/g/n(20M)	1	—	11
	WLAN802.11 n(40M)	3	—	9
	Bluetooth	0	—	78

Max. SAR (1 g) (Unit: W/Kg)				
Band	Measured	Reported	Channel	Position
GPRS 850	0.883	1.191	251	Back side*
GRPS 1900	0.663	0.937	512	Top side
WCDMA Band II	1.11	1.189	9262	Top side*
WCDMA Band IV	0.917	1.19	1412	Top side*
WCDMA Band V	0.707	0.758	4132	Back side
WLAN802.11b	0.575	0.579	1	Back side

* - repeated at the highest SAR measurement according to the KDB 865664 D01

Unless otherwise stated the results shown in this test report refer only to the sample(s) tested and such sample(s) are retained for 90 days only.
除非另有說明，此報告結果僅對測試之樣品負責，同時此樣品僅保留90天。本報告未經本公司書面許可，不可部份複製。
This document is issued by the Company subject to its General Conditions of Service printed overleaf, available on request or accessible at www.sgs.com/terms_and_conditions.htm and, for electronic format documents, subject to Terms and Conditions for Electronic Documents at www.sgs.com/terms_e-document.htm. Attention is drawn to the limitation of liability, indemnification and jurisdiction issues defined therein. Any holder of this document is advised that information contained hereon reflects the Company's findings at the time of its intervention only and within the limits of Client's instructions, if any. The Company's sole responsibility is to its Client and this document does not exonerate parties to a transaction from exercising all their rights and obligations under the transaction documents. This document cannot be reproduced except in full, without prior written approval of the Company. Any unauthorized alteration, forgery or falsification of the content or appearance of this document is unlawful and offenders may be prosecuted to the fullest extent of the law.

GPRS / EDGE conducted power table:

Burst average power						
Max. Rated Avg. Power + Max. Tolerance (dBm)			33.5	31	29.5	28
			1Dn1UP	1Dn2UP	1Dn3UP	1Dn4UP
EUT mode	Frequency (MHz)	CH	Avg. (dBm)	Avg. (dBm)	Avg. (dBm)	Avg. (dBm)
GPRS 850 (GMSK)	824.2	128	32.00	29.70	27.70	26.30
	836.6	190	32.10	29.80	27.80	26.30
	848.8	251	32.20	29.80	27.80	26.30
Source-based time average power						
GPRS 850 (GMSK)	824.2	128	22.97	23.68	23.44	23.29
	836.6	190	23.07	23.78	23.54	23.29
	848.8	251	23.17	23.78	23.54	23.29
The division factor compared to the number of TX time slot						
Division factor			1 TX time slot	2 TX time slot	3 TX time slot	4 TX time slot
			-9.03	-6.02	-4.26	-3.01

Burst average power						
Max. Rated Avg. Power + Max. Tolerance (dBm)			28	25.5	24	22.5
			1Dn1UP	1Dn2UP	1Dn3UP	1Dn4UP
EUT mode	Frequency (MHz)	CH	Avg. (dBm)	Avg. (dBm)	Avg. (dBm)	Avg. (dBm)
EDGE 850	824.2	128	26.30	23.90	22.40	20.90
	836.6	190	26.40	23.90	22.40	21.00
	848.8	251	26.40	23.90	22.40	20.90
Source-based time average power						
EDGE 850	824.2	128	17.27	17.88	18.14	17.89
	836.6	190	17.37	17.88	18.14	17.99
	848.8	251	17.37	17.88	18.14	17.89
The division factor compared to the number of TX time slot						
Division factor			1 TX time slot	2 TX time slot	3 TX time slot	4 TX time slot
			-9.03	-6.02	-4.26	-3.01

Unless otherwise stated the results shown in this test report refer only to the sample(s) tested and such sample(s) are retained for 90 days only.
除非另有說明，此報告結果僅對測試之樣品負責，同時此樣品僅保留90天。本報告未經本公司書面許可，不可部份複製。
This document is issued by the Company subject to its General Conditions of Service printed overleaf, available on request or accessible at www.sgs.com/terms_and_conditions.htm and, for electronic format documents, subject to Terms and Conditions for Electronic Documents at www.sgs.com/terms_e-document.htm. Attention is drawn to the limitation of liability, indemnification and jurisdiction issues defined therein. Any holder of this document is advised that information contained hereon reflects the Company's findings at the time of its intervention only and within the limits of Client's instructions, if any. The Company's sole responsibility is to its Client and this document does not exonerate parties to a transaction from exercising all their rights and obligations under the transaction documents. This document cannot be reproduced except in full, without prior written approval of the Company. Any unauthorized alteration, forgery or falsification of the content or appearance of this document is unlawful and offenders may be prosecuted to the fullest extent of the law.

Burst average power						
Max. Rated Avg. Power + Max. Tolerance (dBm)			30.5	28	26.5	25
			1Dn1UP	1Dn2UP	1Dn3UP	1Dn4UP
EUT mode	Frequency (MHz)	CH	Avg. (dBm)	Avg. (dBm)	Avg. (dBm)	Avg. (dBm)
GPRS 1900 (GMSK)	1850.2	512	29.10	26.40	24.60	23.30
	1880	661	29.00	26.30	24.50	23.20
	1909.8	810	28.80	26.30	24.50	23.10
Source-based time average power						
GPRS 1900 (GMSK)	1850.2	512	20.07	20.38	20.34	20.29
	1880	661	19.97	20.28	20.24	20.19
	1909.8	810	19.77	20.28	20.24	20.09
The division factor compared to the number of TX time slot						
Division factor			1 TX time slot	2 TX time slot	3 TX time slot	4 TX time slot
			-9.03	-6.02	-4.26	-3.01

Burst average power						
Max. Rated Avg. Power + Max. Tolerance (dBm)			27	24.5	23	21.5
			1Dn1UP	1Dn2UP	1Dn3UP	1Dn4UP
EUT mode	Frequency (MHz)	CH	Avg. (dBm)	Avg. (dBm)	Avg. (dBm)	Avg. (dBm)
EDGE 1900	1850.2	512	25.70	23.30	21.70	20.20
	1880	661	25.60	23.10	21.60	20.10
	1909.8	810	25.40	23.00	21.40	19.90
Source-based time average power						
EDGE 1900	1850.2	512	16.67	17.28	17.44	17.19
	1880	661	16.57	17.08	17.34	17.09
	1909.8	810	16.37	16.98	17.14	16.89
The division factor compared to the number of TX time slot						
Division factor			1 TX time slot	2 TX time slot	3 TX time slot	4 TX time slot
			-9.03	-6.02	-4.26	-3.01

Unless otherwise stated the results shown in this test report refer only to the sample(s) tested and such sample(s) are retained for 90 days only.
除非另有說明，此報告結果僅對測試之樣品負責，同時此樣品僅保留90天。本報告未經本公司書面許可，不可部份複製。
This document is issued by the Company subject to its General Conditions of Service printed overleaf, available on request or accessible at www.sgs.com/terms_and_conditions.htm and, for electronic format documents, subject to Terms and Conditions for Electronic Documents at www.sgs.com/terms_e-document.htm. Attention is drawn to the limitation of liability, indemnification and jurisdiction issues defined therein. Any holder of this document is advised that information contained hereon reflects the Company's findings at the time of its intervention only and within the limits of Client's instructions, if any. The Company's sole responsibility is to its Client and this document does not exonerate parties to a transaction from exercising all their rights and obligations under the transaction documents. This document cannot be reproduced except in full, without prior written approval of the Company. Any unauthorized alteration, forgery or falsification of the content or appearance of this document is unlawful and offenders may be prosecuted to the fullest extent of the law.

GPRS 850 / EDGE 850 / GPRS 1900 / EDGE 1900 conducted power table (Reduced power):

Burst average power						
Max. Rated Avg. Power + Max. Tolerance (dBm)			31	28.5	27	25.5
			1Dn1UP	1Dn2UP	1Dn3UP	1Dn4UP
EUT mode	Frequency (MHz)	CH	Avg. (dBm)	Avg. (dBm)	Avg. (dBm)	Avg. (dBm)
GPRS 850 (GMSK)	824.2	128	30.10	27.10	25.00	23.80
	836.6	190	30.20	27.20	25.00	23.80
	848.8	251	30.20	27.20	25.00	23.80
Source-based time average power						
GPRS 850 (GMSK)	824.2	128	21.07	21.08	20.74	20.79
	836.6	190	21.17	21.18	20.74	20.79
	848.8	251	21.17	21.18	20.74	20.79
The division factor compared to the number of TX time slot						
Division factor			1 TX time slot	2 TX time slot	3 TX time slot	4 TX time slot
			-9.03	-6.02	-4.26	-3.01

Burst average power						
Max. Rated Avg. Power + Max. Tolerance (dBm)			28	25	23	22
			1Dn1UP	1Dn2UP	1Dn3UP	1Dn4UP
EUT mode	Frequency (MHz)	CH	Avg. (dBm)	Avg. (dBm)	Avg. (dBm)	Avg. (dBm)
EDGE 850	824.2	128	26.40	23.40	21.40	20.40
	836.6	190	26.40	23.40	21.40	20.40
	848.8	251	26.30	23.40	21.40	20.40
Source-based time average power						
EDGE 850	824.2	128	17.37	17.38	17.14	17.39
	836.6	190	17.37	17.38	17.14	17.39
	848.8	251	17.27	17.38	17.14	17.39
The division factor compared to the number of TX time slot						
Division factor			1 TX time slot	2 TX time slot	3 TX time slot	4 TX time slot
			-9.03	-6.02	-4.26	-3.01

Unless otherwise stated the results shown in this test report refer only to the sample(s) tested and such sample(s) are retained for 90 days only.
除非另有說明，此報告結果僅對測試之樣品負責，同時此樣品僅保留90天。本報告未經本公司書面許可，不可部份複製。
This document is issued by the Company subject to its General Conditions of Service printed overleaf, available on request or accessible at www.sgs.com/terms_and_conditions.htm and, for electronic format documents, subject to Terms and Conditions for Electronic Documents at www.sgs.com/terms_e-document.htm. Attention is drawn to the limitation of liability, indemnification and jurisdiction issues defined therein. Any holder of this document is advised that information contained hereon reflects the Company's findings at the time of its intervention only and within the limits of Client's instructions, if any. The Company's sole responsibility is to its Client and this document does not exonerate parties to a transaction from exercising all their rights and obligations under the transaction documents. This document cannot be reproduced except in full, without prior written approval of the Company. Any unauthorized alteration, forgery or falsification of the content or appearance of this document is unlawful and offenders may be prosecuted to the fullest extent of the law.

Burst average power						
Max. Rated Avg. Power + Max. Tolerance (dBm)			25	22.5	21	19.5
			1Dn1UP	1Dn2UP	1Dn3UP	1Dn4UP
EUT mode	Frequency (MHz)	CH	Avg. (dBm)	Avg. (dBm)	Avg. (dBm)	Avg. (dBm)
GPRS 1900 (GMSK)	1850.2	512	23.90	21.00	19.00	17.90
	1880	661	23.80	21.00	19.00	17.70
	1909.8	810	23.70	20.80	19.00	17.60
Source-based time average power						
GPRS 1900 (GMSK)	1850.2	512	14.87	14.98	14.74	14.89
	1880	661	14.77	14.98	14.74	14.69
	1909.8	810	14.67	14.78	14.74	14.59
The division factor compared to the number of TX time slot						
Division factor			1 TX time slot	2 TX time slot	3 TX time slot	4 TX time slot
			-9.03	-6.02	-4.26	-3.01

Burst average power						
Max. Rated Avg. Power + Max. Tolerance (dBm)			25	22	20.5	19
			1Dn1UP	1Dn2UP	1Dn3UP	1Dn4UP
EUT mode	Frequency (MHz)	CH	Avg. (dBm)	Avg. (dBm)	Avg. (dBm)	Avg. (dBm)
EDGE 1900	1850.2	512	23.70	20.70	18.70	17.70
	1880	661	23.60	20.50	18.60	17.60
	1909.8	810	23.50	20.30	18.50	17.40
Source-based time average power						
EDGE 1900	1850.2	512	14.67	14.68	14.44	14.69
	1880	661	14.57	14.48	14.34	14.59
	1909.8	810	14.47	14.28	14.24	14.39
The division factor compared to the number of TX time slot						
Division factor			1 TX time slot	2 TX time slot	3 TX time slot	4 TX time slot
			-9.03	-6.02	-4.26	-3.01

Unless otherwise stated the results shown in this test report refer only to the sample(s) tested and such sample(s) are retained for 90 days only.
除非另有說明，此報告結果僅對測試之樣品負責，同時此樣品僅保留90天。本報告未經本公司書面許可，不可部份複製。
This document is issued by the Company subject to its General Conditions of Service printed overleaf, available on request or accessible at www.sgs.com/terms_and_conditions.htm and, for electronic format documents, subject to Terms and Conditions for Electronic Documents at www.sgs.com/terms_e-document.htm. Attention is drawn to the limitation of liability, indemnification and jurisdiction issues defined therein. Any holder of this document is advised that information contained hereon reflects the Company's findings at the time of its intervention only and within the limits of Client's instructions, if any. The Company's sole responsibility is to its Client and this document does not exonerate parties to a transaction from exercising all their rights and obligations under the transaction documents. This document cannot be reproduced except in full, without prior written approval of the Company. Any unauthorized alteration, forgery or falsification of the content or appearance of this document is unlawful and offenders may be prosecuted to the fullest extent of the law.

WCDMA Band II / Band IV / Band V - HSDPA / HSUPA/ HSDPA+ conducted power table:

Band	CH	Max. Rated Avg. Power + Max. Tolerance (dBm)	Rel99 AV(dBm)	HSDPA mode AV(dBm)				HSUPA mode AV(dBm)					HSPA+ mode AV(dBm)				
				SUB-1	SUB-2	SUB-3	SUB-4	SUB-1	SUB-2	SUB-3	SUB-4	SUB-5	SUB-1	SUB-2	SUB-3	SUB-4	SUB-5
WCDMA Band II Rel 7	9262	23.5	22.65	21.45	22.53	20.97	21.04	22.57	20.54	21.55	20.67	21.63	22.58	20.56	21.55	20.67	22.38
	9400	23.5	22.30	21.22	22.16	20.66	20.67	22.28	20.33	21.28	20.38	21.20	22.27	20.31	21.26	20.35	22.12
	9538	23.5	22.18	21.02	22.03	20.35	20.47	22.12	20.10	21.14	20.14	21.13	22.13	20.12	21.14	20.16	21.99
WCDMA Band IV Rel 7	1312	23.5	22.72	21.66	22.60	21.18	21.25	22.64	20.61	21.62	20.74	21.63	22.65	20.63	21.62	20.74	22.45
	1412	23.5	22.33	21.22	22.19	20.66	20.67	22.31	20.36	21.31	20.41	21.20	22.30	20.34	21.29	20.38	22.15
	1513	23.5	22.49	21.36	22.34	20.69	20.81	22.43	20.41	21.45	20.45	21.37	22.44	20.43	21.45	20.47	22.30
WCDMA Band V Rel 7	4132	23.5	23.18	22.07	23.11	21.40	21.45	23.14	21.16	22.14	21.21	22.13	23.15	21.18	22.13	21.21	22.96
	4183	23.5	23.08	22.05	22.97	21.43	21.47	23.01	21.02	22.00	21.08	22.00	23.00	21.02	22.00	21.08	22.77
	4233	23.5	22.96	21.89	22.83	21.52	21.58	22.88	20.84	21.88	20.90	21.90	22.87	20.84	21.86	20.90	22.69

HSDPA

SUB-TEST	β_c	β_d	β_d *(SF)*	β_c/β_d	β_{HS} *(Note1, Note 2)*	CM (dB) *(Note 3)*	MPR (dB) *(Note 3)*
1	2/15	15/15	64	2/15	4/15	0.0	0.0
2	12/15	15/15	64	12/15	24/15	1.0	0.0
3	15/15	8/15	64	15/8	30/15	1.5	0.5
4	15/15	4/15	64	15/4	30/15	1.5	0.5

HSUPA

SUB-TEST	β_c	β_d	β_d *(SF)*	β_c/β_d	β_{HS} *(Note1)*	β_{ec}	β_{ed} *(Note 5) (Note 6)*	β_{ed} *(SF)*	β_{ed} *(Codes)*	CM *(dB) (Note 2)*	MPR *(dB) (Note 2)*	*AG Index (Note 6)*	*E-TFCI*
1	11/15	15/15	64	11/15	22/15	209/225	1309/225	4	1	1.0	0.0	20	75
2	6/15	15/15	64	6/15	12/15	12/15	94/75	4	1	3.0	2.0	12	67
3	15/15	9/15	64	15/9	30/15	30/15	$\beta_{ed}1$: 47/15 $\beta_{ed}2$: 47/15	4 4	2	2.0	1.0	15	92
4	2/15	15/15	64	2/15	4/15	2/15	56/75	4	1	3.0	2.0	17	71
5	15/15	15/15	64	15/15	30/15	24/15	134/15	4	1	1.0	0.0	21	81

Unless otherwise stated the results shown in this test report refer only to the sample(s) tested and such sample(s) are retained for 90 days only.
除非另有說明，此報告結果僅對測試之樣品負責，同時此樣品僅保留90天。本報告未經本公司書面許可，不可部份複製。
This document is issued by the Company subject to its General Conditions of Service printed overleaf, available on request or accessible at www.sgs.com/terms_and_conditions.htm and, for electronic format documents, subject to Terms and Conditions for Electronic Documents at www.sgs.com/terms_e-document.htm. Attention is drawn to the limitation of liability, indemnification and jurisdiction issues defined therein. Any holder of this document is advised that information contained hereon reflects the Company's findings at the time of its intervention only and within the limits of Client's instructions, if any. The Company's sole responsibility is to its Client and this document does not exonerate parties to a transaction from exercising all their rights and obligations under the transaction documents. This document cannot be reproduced except in full, without prior written approval of the Company. Any unauthorized alteration, forgery or falsification of the content or appearance of this document is unlawful and offenders may be prosecuted to the fullest extent of the law.

WCDMA Band II / Band IV / Band V - HSDPA / HSUPA / HSPA+ conducted power table (Reduced power) :

Band	CH	Max. Rated Avg. Power + Max. Tolerance (dBm)	Rel99 AV(dBm)	HSDPA mode AV(dBm)				HSUPA mode AV(dBm)					HSPA+ mode AV(dBm)				
				SUB-1	SUB-2	SUB-3	SUB-4	SUB-1	SUB-2	SUB-3	SUB-4	SUB-5	SUB-1	SUB-2	SUB-3	SUB-4	SUB-5
WCDMA Band II Rel 7	9262	16.5	16.20	15.99	16.08	15.51	15.58	16.12	14.09	15.10	14.22	15.98	16.13	14.11	15.10	14.22	15.93
	9400	16.5	15.84	15.60	15.70	15.04	15.05	15.82	13.87	14.82	13.92	15.51	15.81	13.85	14.80	13.89	15.66
	9538	16.5	15.67	15.48	15.52	14.81	14.93	15.61	13.59	14.63	13.63	15.38	15.62	13.61	14.63	13.65	15.48
WCDMA Band IV Rel 7	1312	14.5	13.98	13.90	13.86	13.42	13.49	13.90	11.87	12.88	12.00	13.78	13.91	11.89	12.88	12.00	13.71
	1412	14.5	13.37	13.23	13.23	12.67	12.68	13.35	11.40	12.35	11.45	13.15	13.34	11.38	12.33	11.42	13.19
	1513	14.5	13.70	13.47	13.55	12.80	12.92	13.64	11.62	12.66	11.66	13.40	13.65	11.64	12.66	11.68	13.51
WCDMA Band V Rel 7	4132	21	20.70	20.69	20.63	20.02	20.07	20.66	18.68	19.66	18.73	20.44	20.67	18.70	19.65	18.73	20.48
	4183	21	20.64	20.62	20.53	20.00	20.04	20.57	18.58	19.56	18.64	20.35	20.56	18.58	19.56	18.64	20.33
	4233	21	20.52	20.51	20.39	20.14	20.20	20.44	18.40	19.44	18.46	20.27	20.43	18.40	19.42	18.46	20.25

HSDPA

SUB-TEST	β_c	β_d	β_d *(SF)*	β_c/β_d	β_{HS} *(Note1, Note 2)*	CM (dB) *(Note 3)*	MPR (dB) *(Note 3)*
1	2/15	15/15	64	2/15	4/15	0.0	0.0
2	12/15	15/15	64	12/15	24/15	1.0	0.0
3	15/15	8/15	64	15/8	30/15	1.5	0.5
4	15/15	4/15	64	15/4	30/15	1.5	0.5

HSUPA

SUB-TEST	β_c	β_d	β_d *(SF)*	β_c/β_d	β_{HS} *(Note1)*	β_{ec}	β_{ed} *(Note 5) (Note 6)*	β_{ed} *(SF)*	β_{ed} *(Codes)*	CM *(dB) (Note 2)*	MPR *(dB) (Note 2)*	*AG Index (Note 6)*	*E-TFCI*
1	11/15	15/15	64	11/15	22/15	209/225	1309/225	4	1	1.0	0.0	20	75
2	6/15	15/15	64	6/15	12/15	12/15	94/75	4	1	3.0	2.0	12	67
3	15/15	9/15	64	15/9	30/15	30/15	$\beta_{ed}1$: 47/15 $\beta_{ed}2$: 47/15	4 4	2	2.0	1.0	15	92
4	2/15	15/15	64	2/15	4/15	2/15	56/75	4	1	3.0	2.0	17	71
5	15/15	15/15	64	15/15	30/15	24/15	134/15	4	1	1.0	0.0	21	81

Unless otherwise stated the results shown in this test report refer only to the sample(s) tested and such sample(s) are retained for 90 days only.
除非另有說明，此報告結果僅對測試之樣品負責，同時此樣品僅保留90天。本報告未經本公司書面許可，不可部份複製。
This document is issued by the Company subject to its General Conditions of Service printed overleaf, available on request or accessible at www.sgs.com/terms_and_conditions.htm and, for electronic format documents, subject to Terms and Conditions for Electronic Documents at www.sgs.com/terms_e-document.htm. Attention is drawn to the limitation of liability, indemnification and jurisdiction issues defined therein. Any holder of this document is advised that information contained hereon reflects the Company's findings at the time of its intervention only and within the limits of Client's instructions, if any. The Company's sole responsibility is to its Client and this document does not exonerate parties to a transaction from exercising all their rights and obligations under the transaction documents. This document cannot be reproduced except in full, without prior written approval of the Company. Any unauthorized alteration, forgery or falsification of the content or appearance of this document is unlawful and offenders may be prosecuted to the fullest extent of the law.

#. WLAN802.11 b/g/n(20M/40M) conducted power table:

802.11 b		Max. Rated Avg. Power + Max. Tolerance (dBm)	Average Power Output (dBm)			
CH	Frequency (MHz)		Data Rate (Mbps)			
			1	2	5.5	11
1	2412	16	15.97	15.91	15.69	15.64
6	2437	16	15.86	15.72	15.55	15.32
11	2462	16	15.71	15.50	15.35	15.19

802.11 g		Max. Rated Avg. Power + Max. Tolerance (dBm)	Average Power Output(dBm)							
CH	Frequency (MHz)		Data Rate (Mbps)							
			6	9	12	18	24	36	48	54
1	2412	14	13.98	13.89	13.76	13.59	13.49	13.28	13.05	12.84
6	2437	14	13.96	13.94	13.76	13.74	13.65	13.51	13.45	13.38
11	2462	14	12.09	12.02	11.97	11.93	11.89	11.84	11.79	11.75

802.11 n (20M)		Max. Rated Avg. Power + Max. Tolerance (dBm)	Average Power Output(dBm)							
CH	Frequency (MHz)		Data Rate (Mbps)							
			6.5	13	19.5	26	39	52	58.5	65
1	2412	13	12.90	12.67	12.65	12.57	12.54	12.51	12.30	12.05
6	2437	13	12.81	12.76	12.72	12.65	12.63	12.62	12.60	12.44
11	2462	13	12.44	12.40	12.36	12.31	12.25	12.22	12.17	12.13

802.11 n (40M)		Max. Rated Avg. Power + Max. Tolerance (dBm)	Average Power Output(dBm)							
CH	Frequency (MHz)		Data Rate (Mbps)							
			13.5	27	40.5	54	81	108	121.5	135
3	2422	11.95	11.90	11.80	11.70	11.63	11.39	11.16	11.01	10.82
6	2437	13	12.85	12.62	12.46	12.39	12.20	12.06	11.86	11.77
9	2452	11.99	11.41	11.37	11.33	11.29	11.25	11.21	11.17	11.14

Unless otherwise stated the results shown in this test report refer only to the sample(s) tested and such sample(s) are retained for 90 days only.
除非另有說明，此報告結果僅對測試之樣品負責，同時此樣品僅保留90天。本報告未經本公司書面許可，不可部份複製。
This document is issued by the Company subject to its General Conditions of Service printed overleaf, available on request or accessible at www.sgs.com/terms_and_conditions.htm and, for electronic format documents, subject to Terms and Conditions for Electronic Documents at www.sgs.com/terms_e-document.htm. Attention is drawn to the limitation of liability, indemnification and jurisdiction issues defined therein. Any holder of this document is advised that information contained hereon reflects the Company's findings at the time of its intervention only and within the limits of Client's instructions, if any. The Company's sole responsibility is to its Client and this document does not exonerate parties to a transaction from exercising all their rights and obligations under the transaction documents. This document cannot be reproduced except in full, without prior written approval of the Company. Any unauthorized alteration, forgery or falsification of the content or appearance of this document is unlawful and offenders may be prosecuted to the fullest extent of the law.

#. Bluetooth conducted power table:

Frequency (MHz)	Data Rate	Peak	
		dBm	mW
2402	1	3.02	2.004
2441	1	3.16	2.070
2480	1	2.37	1.726
2402	2	4.18	2.618
2441	2	4.32	2.704
2480	2	3.52	2.249
2402	3	4.55	2.851
2441	3	4.71	2.958
2480	3	3.89	2.449

Frequency (MHz)	Avg. (dBm)
	BT4.0
2402	2.74
2442	2.61
2480	1.86

Unless otherwise stated the results shown in this test report refer only to the sample(s) tested and such sample(s) are retained for 90 days only.
除非另有說明，此報告結果僅對測試之樣品負責，同時此樣品僅保留90天。本報告未經本公司書面許可，不可部份複製。
This document is issued by the Company subject to its General Conditions of Service printed overleaf, available on request or accessible at www.sgs.com/terms_and_conditions.htm and, for electronic format documents, subject to Terms and Conditions for Electronic Documents at www.sgs.com/terms_e-document.htm. Attention is drawn to the limitation of liability, indemnification and jurisdiction issues defined therein. Any holder of this document is advised that information contained hereon reflects the Company's findings at the time of its intervention only and within the limits of Client's instructions, if any. The Company's sole responsibility is to its Client and this document does not exonerate parties to a transaction from exercising all their rights and obligations under the transaction documents. This document cannot be reproduced except in full, without prior written approval of the Company. Any unauthorized alteration, forgery or falsification of the content or appearance of this document is unlawful and offenders may be prosecuted to the fullest extent of the law.

1.4 Test Environment

Ambient Temperature: 22±2° C
Tissue Simulating Liquid: 22±2° C

1.5 Operation Description

1. WWAN (GPRS/EDGE/WCDMA/HSDPA/HSUPA):

The EUT is controlled by using Radio Communication Testers (R&S CMU200), and the communication between the EUT and the testers is established by air link. The EUT was tested in three configurations:

Configuration 1: Back side_0mm with power reduction and_19mm without power reduction.

Configuration 2: Top side_0mm with power reduction and_23mm without power reduction.

Configuration 3: Left side_0mm with power reduction and_5mm without power reduction.

Configurations: Right/bottom sides. (Not required to be tested based on the SAR test exclusion threshold in FCC KDB447498 D01.)

Band	Power Reduction
GPRS850	YES
EDGE850	YES
GPRS1900	YES
EDGE1900	YES
WCDMA B2	YES
WCDMA B4	YES
WCDMA B5	YES
WLAN	NO
BT	NO

Unless otherwise stated the results shown in this test report refer only to the sample(s) tested and such sample(s) are retained for 90 days only.
除非另有說明，此報告結果僅對測試之樣品負責，同時此樣品僅保留90天。本報告未經本公司書面許可，不可部份複製。
This document is issued by the Company subject to its General Conditions of Service printed overleaf, available on request or accessible at www.sgs.com/terms_and_conditions.htm and, for electronic format documents, subject to Terms and Conditions for Electronic Documents at www.sgs.com/terms_e-document.htm. Attention is drawn to the limitation of liability, indemnification and jurisdiction issues defined therein. Any holder of this document is advised that information contained hereon reflects the Company's findings at the time of its intervention only and within the limits of Client's instructions, if any. The Company's sole responsibility is to its Client and this document does not exonerate parties to a transaction from exercising all their rights and obligations under the transaction documents. This document cannot be reproduced except in full, without prior written approval of the Company. Any unauthorized alteration, forgery or falsification of the content or appearance of this document is unlawful and offenders may be prosecuted to the fullest extent of the law.

2. WLAN (802.11 b/g/n):

Use chipset specific software to control the EUT, and makes it transmit in maximum power. The EUT is tested in two configurations:

Configuration 1: Back side_0mm without power reduction.

Configuration 2: Bottom side_0mm without power reduction.

Configurations: Left/Right/Top sides (Not required to be tested based on the SAR test exclusion threshold in FCC KDB447498 D01.)

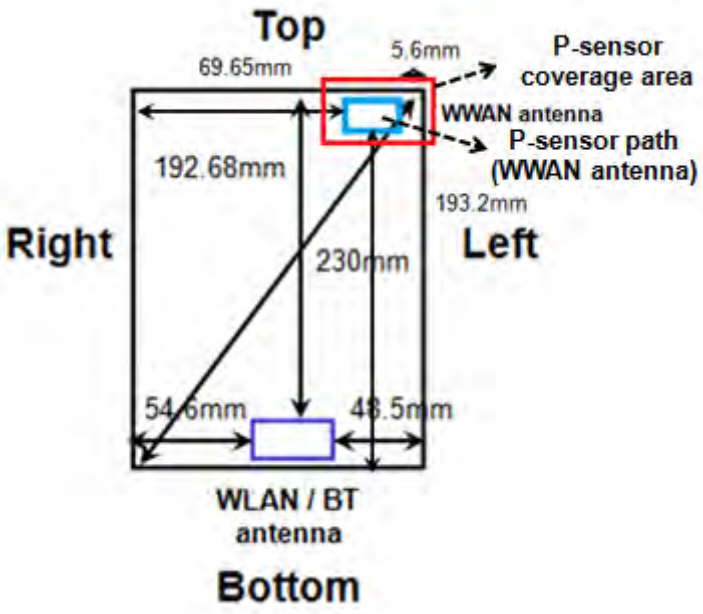

Back view of the tablet

(Note:The proximity sensor is collocated with WWAN antenna.)

Unless otherwise stated the results shown in this test report refer only to the sample(s) tested and such sample(s) are retained for 90 days only.
除非另有說明，此報告結果僅對測試之樣品負責，同時此樣品僅保留90天。本報告未經本公司書面許可，不可部份複製。
This document is issued by the Company subject to its General Conditions of Service printed overleaf, available on request or accessible at www.sgs.com/terms_and_conditions.htm and, for electronic format documents, subject to Terms and Conditions for Electronic Documents at www.sgs.com/terms_e-document.htm. Attention is drawn to the limitation of liability, indemnification and jurisdiction issues defined therein. Any holder of this document is advised that information contained hereon reflects the Company's findings at the time of its intervention only and within the limits of Client's instructions, if any. The Company's sole responsibility is to its Client and this document does not exonerate parties to a transaction from exercising all their rights and obligations under the transaction documents. This document cannot be reproduced except in full, without prior written approval of the Company. Any unauthorized alteration, forgery or falsification of the content or appearance of this document is unlawful and offenders may be prosecuted to the fullest extent of the law.

Note:

1. The SAR test was performed on the maximum sourced-based time-averaged power (GPRS multi-class 10).

2. SAR for HSPA is not required since its power is less than ¼ dB higher than RMC without HSPA and SAR for 12.2 kbps RMC without HSPA is ≤ 75% of the SAR limit(1.2 W/kg)

3. SAR for HSPA+ is not required since its power is less than ¼ dB higher than RMC without HSPA or SAR for 12.2 kbps RMC without HSPA+ is ≤ 75% of the SAR limit(1.2 W/kg)

4. The SAR test of 802.11g/n is not required since its maximum power is less than 1/4 dB higher than 802.11b.

5. Testing at higher data rates is not required since the maximum power is less than 1/4 dB higher than those measured at the lowest data rate.

6. BT and WLAN share the same antenna path and BT can not be transmitted simultaneously with WLAN antenna according to client's description.

7. According to KDB447498 D01,

   (1) The SAR test exclusion thresholds for 100 MHz to 6 GHz at test separation distances≤ 50 mm are determined by:

$$\frac{\text{Max. tune up power(mW)}}{\text{Min. test separation distance(mm)}} \times \sqrt{f(\text{GHz})} \leq 3$$

   When the minimum test separation distance is < 5mm, 5mm is applied to determine SAR test exclusion.

   (2) For test separation distances > 50 mm, and the frequency at 100 MHz to 1500MHz, the SAR test exclusion threshold is determined according to the following, and as illustrated in Appendix B of KDB447498 D01.
   [(Threshold at 50mm in step1) + (test separation distance-50mm)x($\frac{f(MHz)}{160}$)](mW),

   (3) For test separation distances > 50 mm, and the frequency at >1500MHz to 6GHz, the SAR test exclusion threshold is determined according to the following, and as illustrated in Appendix B of KDB447498 D01.

   [(Threshold at 50mm in step1) + (test separation distance-50mm)x10](mW),

Unless otherwise stated the results shown in this test report refer only to the sample(s) tested and such sample(s) are retained for 90 days only.
除非另有說明，此報告結果僅對測試之樣品負責，同時此樣品僅保留90天。本報告未經本公司書面許可，不可部份複製。
This document is issued by the Company subject to its General Conditions of Service printed overleaf, available on request or accessible at www.sgs.com/terms_and_conditions.htm and, for electronic format documents, subject to Terms and Conditions for Electronic Documents at www.sgs.com/terms_e-document.htm. Attention is drawn to the limitation of liability, indemnification and jurisdiction issues defined therein. Any holder of this document is advised that information contained hereon reflects the Company's findings at the time of its intervention only and within the limits of Client's instructions, if any. The Company's sole responsibility is to its Client and this document does not exonerate parties to a transaction from exercising all their rights and obligations under the transaction documents. This document cannot be reproduced except in full, without prior written approval of the Company. Any unauthorized alteration, forgery or falsification of the content or appearance of this document is unlawful and offenders may be prosecuted to the fullest extent of the law.

Mode	Max. tune-up power(dBm)	Max. tune-up power(mW)	Top side			Right side			Left side		
			Ant. to surface (mm)	Exclusion threshold (mW)	Require SAR testing?	Ant. to surface (mm)	Exclusion threshold (mW)	Require SAR testing?	Ant. to surface (mm)	Exclusion threshold (mW)	Require SAR testing?
GPRS850 class10	31	1258.925	less than 5	231.998	YES	69.65	134.419	NO	5.6	207.141	YES
GPRS1900 class10	28	630.957	less than 5	174.4	YES	69.65	216.94	NO	5.6	155.714	YES
WCDMA B2	23.5	223.872	less than 5	61.847	YES	69.65	202.685	NO	5.6	55.221	YES
WCDMA B4	23.5	223.872	less than 5	59.282	YES	69.65	205.428	NO	5.6	52.93	YES
WCDMA B5	23.5	223.872	less than 5	41.207	YES	69.65	203.621	NO	5.6	36.792	YES
WLAN	16	39.811	192.68	1428.049	NO	54.6	47.249	NO	48.5	1.288	NO

Mode	Max. tune-up power(dBm)	Max. tune-up power(mW)	Bottom side			Back side		
			Ant. to surface (mm)	Exclusion threshold (mW)	Require SAR testing?	Ant. to surface (mm)	Exclusion threshold (mW)	Require SAR testing?
GPRS850 class10	31	1258.925	193.2	833.712	NO	less than 5	231.918	YES
GPRS1900 class10	28	630.957	193.2	1449.44	NO	less than 5	174.4	YES
WCDMA B2	23.5	223.872	193.2	1438.185	NO	less than 5	61.847	YES
WCDMA B4	23.5	223.872	193.2	1437.928	NO	less than 5	59.282	YES
WCDMA B5	23.5	223.872	193.2	812.723	NO	less than 5	41.207	YES
WLAN	16	39.811	192.68	12.493	YES	less than 5	12.493	YES

Unless otherwise stated the results shown in this test report refer only to the sample(s) tested and such sample(s) are retained for 90 days only.
除非另有說明，此報告結果僅對測試之樣品負責，同時此樣品僅保留90天。本報告未經本公司書面許可，不可部份複製。
This document is issued by the Company subject to its General Conditions of Service printed overleaf, available on request or accessible at www.sgs.com/terms_and_conditions.htm and, for electronic format documents, subject to Terms and Conditions for Electronic Documents at www.sgs.com/terms_e-document.htm. Attention is drawn to the limitation of liability, indemnification and jurisdiction issues defined therein. Any holder of this document is advised that information contained hereon reflects the Company's findings at the time of its intervention only and within the limits of Client's instructions, if any. The Company's sole responsibility is to its Client and this document does not exonerate parties to a transaction from exercising all their rights and obligations under the transaction documents. This document cannot be reproduced except in full, without prior written approval of the Company. Any unauthorized alteration, forgery or falsification of the content or appearance of this document is unlawful and offenders may be prosecuted to the fullest extent of the law.

Mode	Maximum power(dBm)	Maximum power(mW)	Top side			Right side			Left side		
			Ant. to surface (mm)	Exclusion threshold (mW)	Require SAR testing?	Ant. to surface (mm)	Exclusion threshold (mW)	Require SAR testing?	Ant. to surface (mm)	Exclusion threshold (mW)	Require SAR testing?
BT	4.71	2.958	192.68	1426.893	NO	54.6	46.093	NO	48.5	0.096	NO

Mode	Maximum power(dBm)	Maximum power(mW)	Bottom side			Back side		
			Ant. to surface (mm)	Exclusion threshold (mW)	Require SAR testing?	Ant. to surface (mm)	over 200mm	Require SAR testing?
BT	4.71	2.958	less than 5	0.932	NO	less than 5	0.932	NO

8. According to KDB447498 D01, testing of other required channels is not required when the reported 1-g SAR for the highest output channel is ≤ 0.8 W/kg, when the transmission band is ≤ 100 MHz.

9. According to KDB447498 D01, testing of other required channels is not required when the reported 1-g SAR for the highest output channel is ≤ 0.6 W/kg, when the transmission band is between 100 MHz and 200MHz.

10. According to KDB447498 D01, testing of other required channels is not required when the reported 1-g SAR for the highest output channel is ≤ 0.4 W/kg, when the transmission band is ≥ 200MHz.

11. According to KDB865664 D01, SAR measurement variability must be assessed for each frequency band. When the original highest measured SAR is ≥ 0.8 W/kg, repeated that measurement once. Perform a second repeated measurement only if the ratio of largest to smallest SAR for the original and first repeated measurements is > 1.20 or when the original or repeated measurement is ≥ 1.45 W/kg (~ 10% from the 1-g SAR limit)

Unless otherwise stated the results shown in this test report refer only to the sample(s) tested and such sample(s) are retained for 90 days only.
除非另有說明，此報告結果僅對測試之樣品負責，同時此樣品僅保留90天。本報告未經本公司書面許可，不可部份複製。
This document is issued by the Company subject to its General Conditions of Service printed overleaf, available on request or accessible at www.sgs.com/terms_and_conditions.htm and, for electronic format documents, subject to Terms and Conditions for Electronic Documents at www.sgs.com/terms_e-document.htm. Attention is drawn to the limitation of liability, indemnification and jurisdiction issues defined therein. Any holder of this document is advised that information contained hereon reflects the Company's findings at the time of its intervention only and within the limits of Client's instructions, if any. The Company's sole responsibility is to its Client and this document does not exonerate parties to a transaction from exercising all their rights and obligations under the transaction documents. This document cannot be reproduced except in full, without prior written approval of the Company. Any unauthorized alteration, forgery or falsification of the content or appearance of this document is unlawful and offenders may be prosecuted to the fullest extent of the law.

1.6 Proximity sensor operation description

The P-sensor being used to reduce output power is capacitive in which when the object such as human body, metal or plastic is being approached, the sensing capacitance would be increased with the antenna pad. Once the capacitance is accumulated, and reached over the threshold as set in MCU of the microchip, the interruption signal is pulled low (High state without trigger) and further inform modem module of the transmitter to make power reduction.

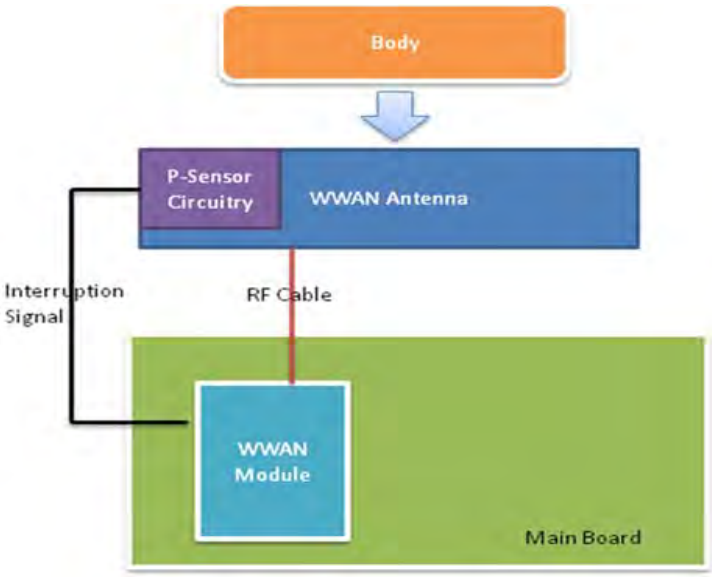

1.6.1 Proximity sensor measurement procedure

(1) The proximity sensor is collocated with WWAN antenna.

(2) Output power is measured, and monitored by using the communication tester. A RF cables with sufficient length was being attached from the antenna port of the module, and used for the measurement. The appropriate loss attenuated from cable is compensated in the communication tester.

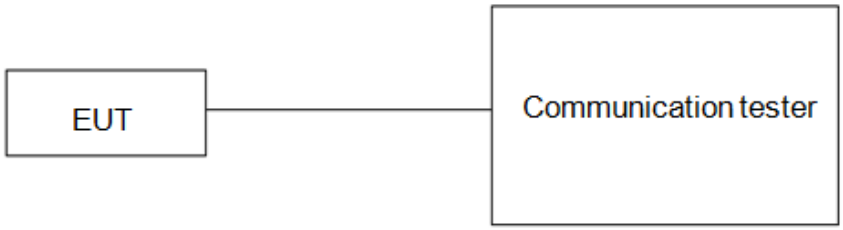

Unless otherwise stated the results shown in this test report refer only to the sample(s) tested and such sample(s) are retained for 90 days only.
除非另有說明，此報告結果僅對測試之樣品負責，同時此樣品僅保留90天。本報告未經本公司書面許可，不可部份複製。
This document is issued by the Company subject to its General Conditions of Service printed overleaf, available on request or accessible at www.sgs.com/terms_and_conditions.htm and, for electronic format documents, subject to Terms and Conditions for Electronic Documents at www.sgs.com/terms_e-document.htm. Attention is drawn to the limitation of liability, indemnification and jurisdiction issues defined therein. Any holder of this document is advised that information contained hereon reflects the Company's findings at the time of its intervention only and within the limits of Client's instructions, if any. The Company's sole responsibility is to its Client and this document does not exonerate parties to a transaction from exercising all their rights and obligations under the transaction documents. This document cannot be reproduced except in full, without prior written approval of the Company. Any unauthorized alteration, forgery or falsification of the content or appearance of this document is unlawful and offenders may be prosecuted to the fullest extent of the law.

1.6.2 Trigger distances of back/top/left sides

Test procedure:

1) The entire back surface or edge of the tablet is positioned below a flat phantom filled with the required tissue equivalent medium and positioned at least 20 mm further than the distance that triggers power reduction.

2) The back surface or edge is moved toward the phantom in 3 mm steps until the sensor triggers.

3) The back surface or edge is then moved back (further away) from the phantom until maximum output power is returned to the normal maximum level.

4) The back surface or edge is again moved toward the phantom, but in 1 mm steps, until it is at least 5 mm past the triggering point or touching the phantom

5) If the tablet is not touching the phantom, it is moved in 3 mm steps until it touches the phantom to confirm that the sensor remains triggered and the maximum power stays reduced.

6) The process is then reversed by moving the tablet away from the phantom to determine triggering release, until it is at least 10 mm beyond the point that triggers the return of normal maximum power.

7) The measured output power within ± 5 mm of the triggering points, or until the tablet is touching the phantom, for movements to and from the phantom should be tabulated.

8) To ensure all production units are compliant, it is generally necessary to reduce the triggering distance determined from the triggering tests by 1 mm, or more if it is necessary, and use the smallest distance for movements to and from the phantom, minus 1 mm, as the sensor triggering distance for determining the SAR measurement distance.

9) For back side, the trigger distance of proximity sensor is 20mm.

10) For top side, the trigger distance of proximity sensor is 25mm, and we perform the 1.6.3 tilt angle testing in next step.

11) For left side, the trigger distance of proximity sensor is 7mm, and we perform the 1.6.3 tilt angle testing in next step.

Unless otherwise stated the results shown in this test report refer only to the sample(s) tested and such sample(s) are retained for 90 days only.
除非另有說明，此報告結果僅對測試之樣品負責，同時此樣品僅保留90天。本報告未經本公司書面許可，不可部份複製。
This document is issued by the Company subject to its General Conditions of Service printed overleaf, available on request or accessible at www.sgs.com/terms_and_conditions.htm and, for electronic format documents, subject to Terms and Conditions for Electronic Documents at www.sgs.com/terms_e-document.htm. Attention is drawn to the limitation of liability, indemnification and jurisdiction issues defined therein. Any holder of this document is advised that information contained hereon reflects the Company's findings at the time of its intervention only and within the limits of Client's instructions, if any. The Company's sole responsibility is to its Client and this document does not exonerate parties to a transaction from exercising all their rights and obligations under the transaction documents. This document cannot be reproduced except in full, without prior written approval of the Company. Any unauthorized alteration, forgery or falsification of the content or appearance of this document is unlawful and offenders may be prosecuted to the fullest extent of the law.

1.6.3 Tilt angle testing

Test procedure:

1) The influence of table tilt angles to proximity sensor triggering is determined by positioning each tablet edge that contains a transmitting antenna, perpendicular to the flat phantom, at the smallest sensor triggering test distance determined in sections 1.6.2 by rotating the tablet around the edge next to the phantom in ≤ 10 deg increments until the tablet is +/- 45deg or more from the vertical position at 0 deg.

2) If sensor triggering is released and normal maximum output power is restored within the +/- 45deg range, the procedures in step 1) should be repeated by reducing the tablet to phantom separation distance by 1 mm until the proximity sensor no longer releases triggering, and maximum output power remains in the reduced mode.

3) The smallest separation distance determined in steps 1) and 2), minus 1 mm, is the sensor triggering distance for tablet tilt coverage. The smallest separation distance determined in sections 1.6.2, 1.6.3 minus 1 mm should be used in the SAR measurements.

4) The influence of table tilt angles to proximity sensor triggering is determined by positioning top and left sides, please refer to table 1.6.5 and 1.6.6.

5) After the tilt angle testing for top side, the sensor is not released during +/- 45deg, so 25-1=24mm, is the sensor triggering distance for tablet tilt coverage. The smallest separation distance minus 1 mm(24-1=23mm) should be used in the SAR measurements.

6) After the tilt angle testing for left side, the sensor is not released during +/- 45deg, so 7-1=6mm, is the sensor triggering distance for tablet tilt coverage. The smallest separation distance minus 1 mm(6-1=5mm) should be used in the SAR measurements.

Unless otherwise stated the results shown in this test report refer only to the sample(s) tested and such sample(s) are retained for 90 days only.
除非另有說明，此報告結果僅對測試之樣品負責，同時此樣品僅保留90天。本報告未經本公司書面許可，不可部份複製。
This document is issued by the Company subject to its General Conditions of Service printed overleaf, available on request or accessible at www.sgs.com/terms_and_conditions.htm and, for electronic format documents, subject to Terms and Conditions for Electronic Documents at www.sgs.com/terms_e-document.htm. Attention is drawn to the limitation of liability, indemnification and jurisdiction issues defined therein. Any holder of this document is advised that information contained hereon reflects the Company's findings at the time of its intervention only and within the limits of Client's instructions, if any. The Company's sole responsibility is to its Client and this document does not exonerate parties to a transaction from exercising all their rights and obligations under the transaction documents. This document cannot be reproduced except in full, without prior written approval of the Company. Any unauthorized alteration, forgery or falsification of the content or appearance of this document is unlawful and offenders may be prosecuted to the fullest extent of the law.

1.6.4 Proximity sensor coverage

The following procedures do not apply and are not required for configurations where the antenna and sensor are collocated and the peak SAR location is overlapping with the sensor.

Test procedure:

1) The back surface or edges of the tablet is positioned at a test separation distance less than or equal to the distance required for back surface or edge triggering, with both the antenna and sensor pad located at least 20 mm laterally outside the edge (boundary) of the phantom, along the direction of maximum antenna and sensor offset.

2) The similar sequence of steps applied to determine sensor triggering distance in section 1.6.2 are used to verify back surface and edge sensor coverage by moving the tablet (sensor and antenna) horizontally toward the phantom while maintaining the same vertical separation between the back surface or edge and the phantom.

3) After the exact location where triggering of power reduction is determined, with respect to the sensor and antenna, the tablet movement should be continued, in 3 mm increments, until both the sensor and antenna(s) are fully under the phantom and at least 20 mm inside the phantom edge.

4) The process is then repeated from the other direction, at the opposite end of maximum antenna and sensor offset, by rotating the tablet 180 degrees.

Unless otherwise stated the results shown in this test report refer only to the sample(s) tested and such sample(s) are retained for 90 days only.
除非另有說明，此報告結果僅對測試之樣品負責，同時此樣品僅保留90天。本報告未經本公司書面許可，不可部份複製。
This document is issued by the Company subject to its General Conditions of Service printed overleaf, available on request or accessible at www.sgs.com/terms_and_conditions.htm and, for electronic format documents, subject to Terms and Conditions for Electronic Documents at www.sgs.com/terms_e-document.htm. Attention is drawn to the limitation of liability, indemnification and jurisdiction issues defined therein. Any holder of this document is advised that information contained hereon reflects the Company's findings at the time of its intervention only and within the limits of Client's instructions, if any. The Company's sole responsibility is to its Client and this document does not exonerate parties to a transaction from exercising all their rights and obligations under the transaction documents. This document cannot be reproduced except in full, without prior written approval of the Company. Any unauthorized alteration, forgery or falsification of the content or appearance of this document is unlawful and offenders may be prosecuted to the fullest extent of the law.

1.6.5 Results

The measured output power within ± 5 mm of the triggering points, or until the tablet is touching the phantom, for movements to and from the phantom is tabulated in the following.

Back side

Moving device toward the phantom

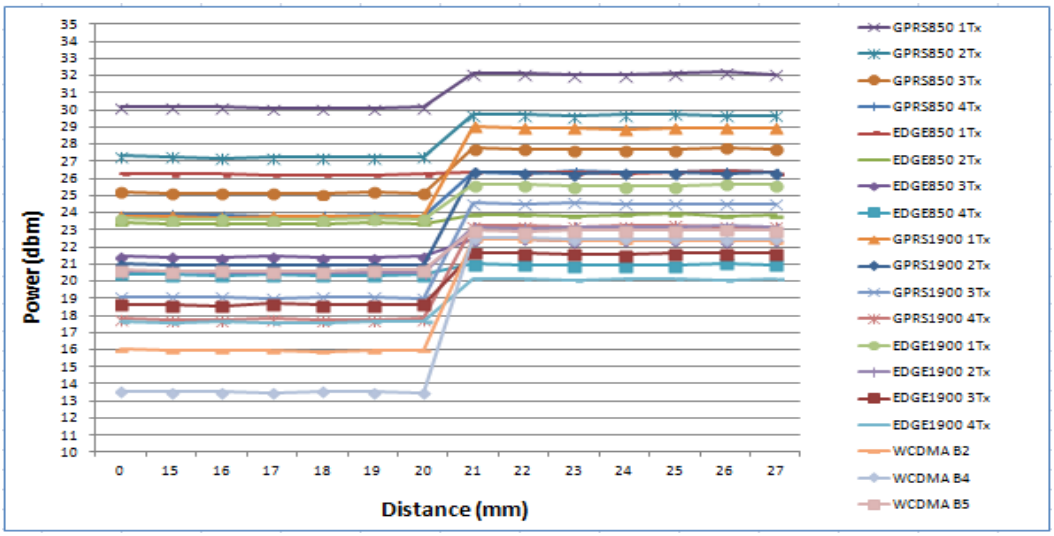

Moving device away from the phantom

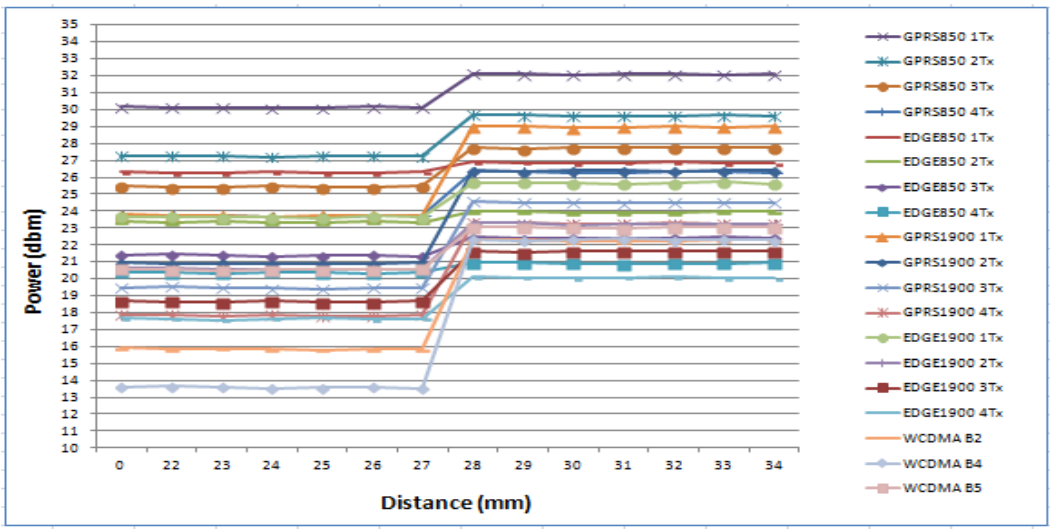

For back side, the worst trigger distance of proximity sensor is 20mm, thus we test back side SAR in 19mm without power reduction and 0mm with power reduction.

Unless otherwise stated the results shown in this test report refer only to the sample(s) tested and such sample(s) are retained for 90 days only.
除非另有說明，此報告結果僅對測試之樣品負責，同時此樣品僅保留90天。本報告未經本公司書面許可，不可部份複製。
This document is issued by the Company subject to its General Conditions of Service printed overleaf, available on request or accessible at www.sgs.com/terms_and_conditions.htm and, for electronic format documents, subject to Terms and Conditions for Electronic Documents at www.sgs.com/terms_e-document.htm. Attention is drawn to the limitation of liability, indemnification and jurisdiction issues defined therein. Any holder of this document is advised that information contained hereon reflects the Company's findings at the time of its intervention only and within the limits of Client's instructions, if any. The Company's sole responsibility is to its Client and this document does not exonerate parties to a transaction from exercising all their rights and obligations under the transaction documents. This document cannot be reproduced except in full, without prior written approval of the Company. Any unauthorized alteration, forgery or falsification of the content or appearance of this document is unlawful and offenders may be prosecuted to the fullest extent of the law.

Top side

Moving device toward the phantom

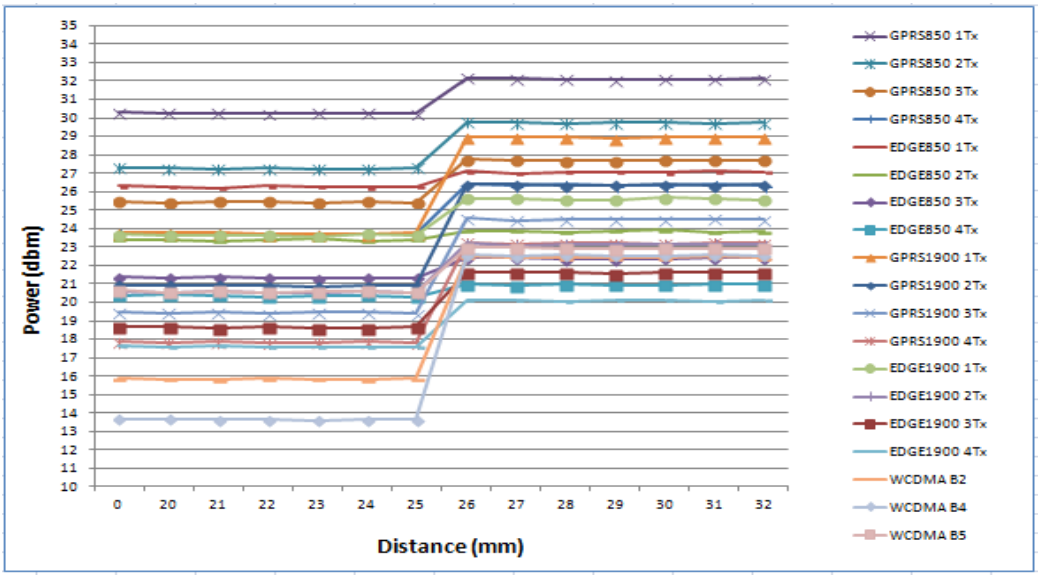

Moving device away from the phantom

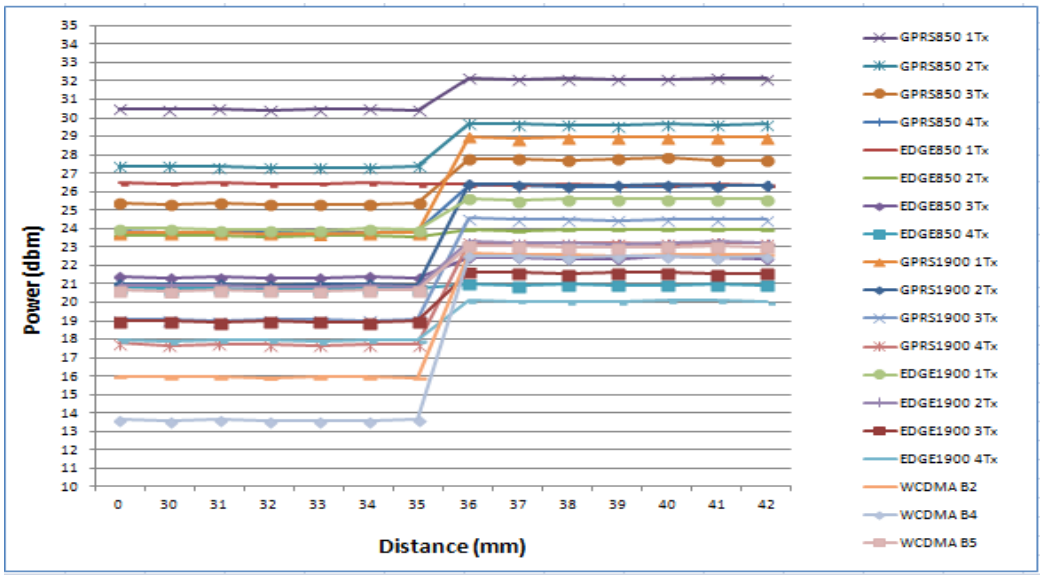

For top side, the worst trigger distance of proximity sensor is 25mm, so next we perform the tilt angle testing.

Unless otherwise stated the results shown in this test report refer only to the sample(s) tested and such sample(s) are retained for 90 days only.
除非另有說明，此報告結果僅對測試之樣品負責，同時此樣品僅保留90天。本報告未經本公司書面許可，不可部份複製。
This document is issued by the Company subject to its General Conditions of Service printed overleaf, available on request or accessible at www.sgs.com/terms_and_conditions.htm and, for electronic format documents, subject to Terms and Conditions for Electronic Documents at www.sgs.com/terms_e-document.htm. Attention is drawn to the limitation of liability, indemnification and jurisdiction issues defined therein. Any holder of this document is advised that information contained hereon reflects the Company's findings at the time of its intervention only and within the limits of Client's instructions, if any. The Company's sole responsibility is to its Client and this document does not exonerate parties to a transaction from exercising all their rights and obligations under the transaction documents. This document cannot be reproduced except in full, without prior written approval of the Company. Any unauthorized alteration, forgery or falsification of the content or appearance of this document is unlawful and offenders may be prosecuted to the fullest extent of the law.

Left side

Moving device toward the phantom

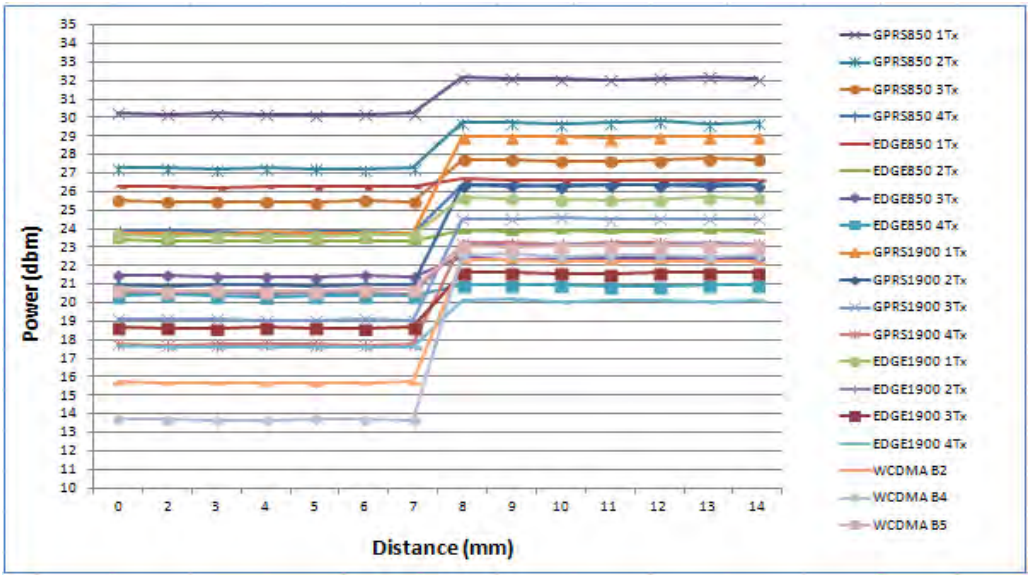

Moving device away from the phantom

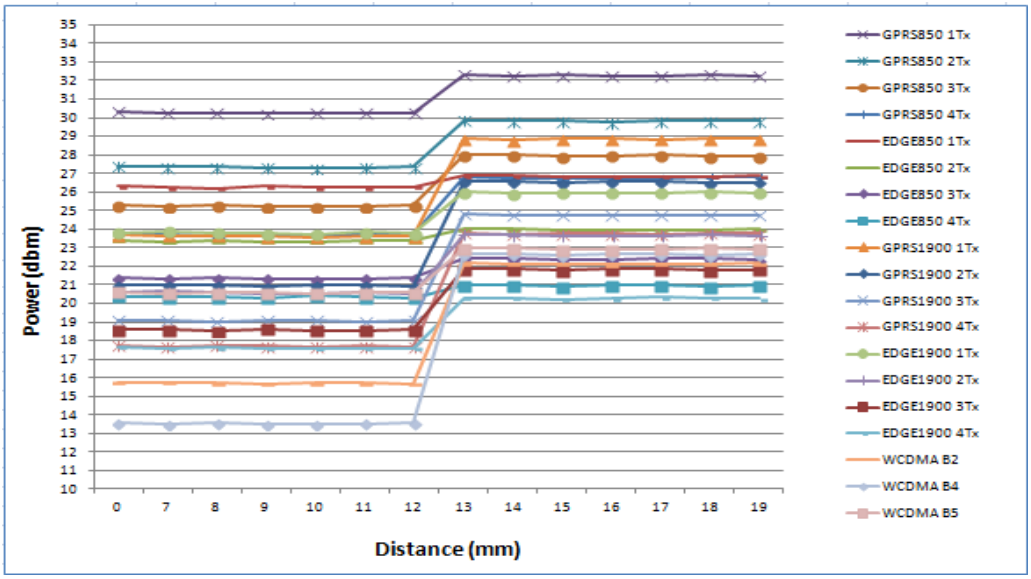

For left side, the worst trigger distance of proximity sensor is 7mm, so next we perform the tilt angle testing.

Unless otherwise stated the results shown in this test report refer only to the sample(s) tested and such sample(s) are retained for 90 days only.
除非另有說明，此報告結果僅對測試之樣品負責，同時此樣品僅保留90天。本報告未經本公司書面許可，不可部份複製。
This document is issued by the Company subject to its General Conditions of Service printed overleaf, available on request or accessible at www.sgs.com/terms_and_conditions.htm and, for electronic format documents, subject to Terms and Conditions for Electronic Documents at www.sgs.com/terms_e-document.htm. Attention is drawn to the limitation of liability, indemnification and jurisdiction issues defined therein. Any holder of this document is advised that information contained hereon reflects the Company's findings at the time of its intervention only and within the limits of Client's instructions, if any. The Company's sole responsibility is to its Client and this document does not exonerate parties to a transaction from exercising all their rights and obligations under the transaction documents. This document cannot be reproduced except in full, without prior written approval of the Company. Any unauthorized alteration, forgery or falsification of the content or appearance of this document is unlawful and offenders may be prosecuted to the fullest extent of the law.

Table 1.6.5 Tilt angle test results for top side

P-sensor ON/OFF	-50 deg	-45 deg	-40 deg	-30 deg	-20 deg	-10 deg	0 deg	10 deg	20 deg	30 deg	40 deg	45 deg	50 deg
25mm	ON	ON	ON	ON	ON	ON	ON	ON	ON	ON	ON	ON	ON

During the tilt angle testing for top side, the sensor is not released during ± 45°, so 25-1=24mm, is the sensor triggering distance for tablet tilt coverage. The smallest separation distance minus 1 mm(24-1=23mm) should be used in the SAR measurements for top side.

Table 1.6.6 Tilt angle test results for left side

P-sensor ON/OFF	-50 deg	-45 deg	-40 deg	-30 deg	-20 deg	-10 deg	0 deg	10 deg	20 deg	30 deg	40 deg	45 deg	50 deg
7mm	ON	ON	ON	ON	ON	ON	ON	ON	ON	ON	ON	ON	ON

During the tilt angle testing for left side, the sensor is not released during ± 45°, so 7-1=6mm, is the sensor triggering distance for tablet tilt coverage. The smallest separation distance minus 1 mm(6-1=5mm) should be used in the SAR measurements.

Note:

1. The triggering variations and hysteresis effect has been evaluated separately according to the tissue-equivalent medium required for each frequency band, and sensor triggering does not change with different tissue-equivalent media.

2. The default power level for sensor failure and malfunctioning, including all compliance concerns, has been addressed in the client's operation description for the proximity sensor implementation to be acceptable.

3. Conducted power is monitored qualitatively to identify the general triggering characteristics and recorded quantitatively, versus spacing.

Unless otherwise stated the results shown in this test report refer only to the sample(s) tested and such sample(s) are retained for 90 days only.
除非另有說明，此報告結果僅對測試之樣品負責，同時此樣品僅保留90天。本報告未經本公司書面許可，不可部份複製。
This document is issued by the Company subject to its General Conditions of Service printed overleaf, available on request or accessible at www.sgs.com/terms_and_conditions.htm and, for electronic format documents, subject to Terms and Conditions for Electronic Documents at www.sgs.com/terms_e-document.htm. Attention is drawn to the limitation of liability, indemnification and jurisdiction issues defined therein. Any holder of this document is advised that information contained hereon reflects the Company's findings at the time of its intervention only and within the limits of Client's instructions, if any. The Company's sole responsibility is to its Client and this document does not exonerate parties to a transaction from exercising all their rights and obligations under the transaction documents. This document cannot be reproduced except in full, without prior written approval of the Company. Any unauthorized alteration, forgery or falsification of the content or appearance of this document is unlawful and offenders may be prosecuted to the fullest extent of the law.

1.7 The SAR Measurement System

A block diagram of the SAR measurement System is given in Fig. a. This SAR Measurement System uses a Computer-controlled 3-D stepper motor system (SPEAG DASY 5 professional system). The model EX3DV4 field probe is used to determine the internal electric fields. The SAR can be obtained from the equation SAR= σ ($|Ei|^2$)/ ρ where σ and ρ are the conductivity and mass density of the tissue-simulant.

The DASY 5 system for performing compliance tests consists of the following items:

- A standard high precision 6-axis robot (Staubli RX family) with controller, teach pendant and software. An arm extension is for accommodating the data acquisition electronics (DAE).
- A dosimetric probe, i.e., an isotropic E-field probe optimized and calibrated for usage intissue simulating liquid. The probe is equipped with an optical surface detector system.
- A data acquisition electronics (DAE) which performs the signal amplification, signal multiplexing, AD-conversion, offset measurements, mechanical surface detection, collision detection, etc. The unit is battery powered with standard or rechargeable batteries. The signal is optically transmitted to the EOC.

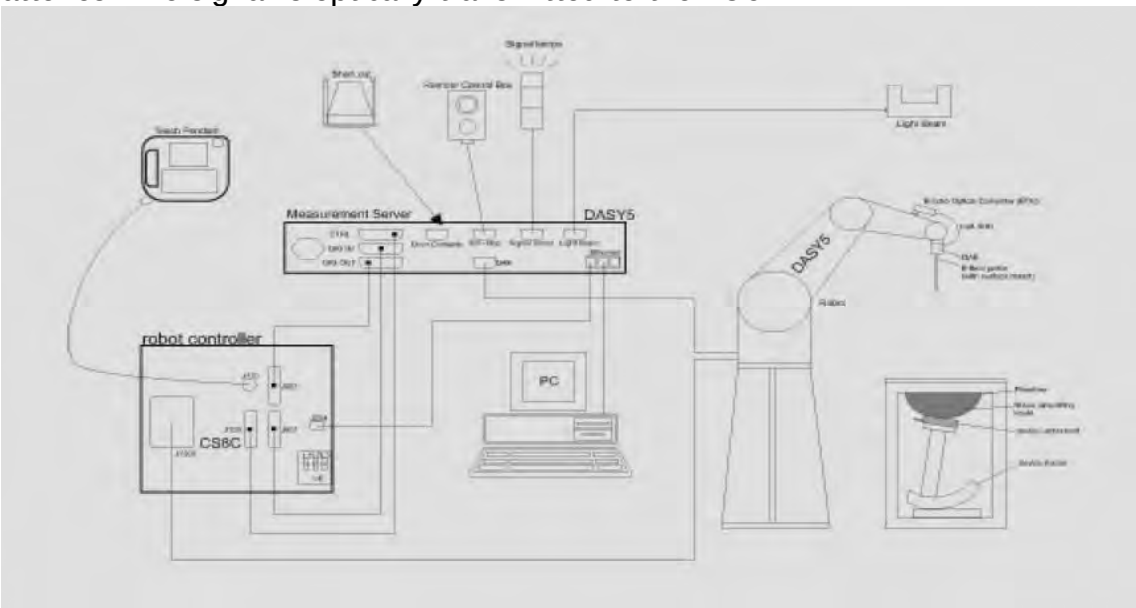

Fig. a The block diagram of SAR system

Unless otherwise stated the results shown in this test report refer only to the sample(s) tested and such sample(s) are retained for 90 days only.
除非另有說明，此報告結果僅對測試之樣品負責，同時此樣品僅保留90天。本報告未經本公司書面許可，不可部份複製。
This document is issued by the Company subject to its General Conditions of Service printed overleaf, available on request or accessible at www.sgs.com/terms_and_conditions.htm and, for electronic format documents, subject to Terms and Conditions for Electronic Documents at www.sgs.com/terms_e-document.htm. Attention is drawn to the limitation of liability, indemnification and jurisdiction issues defined therein. Any holder of this document is advised that information contained hereon reflects the Company's findings at the time of its intervention only and within the limits of Client's instructions, if any. The Company's sole responsibility is to its Client and this document does not exonerate parties to a transaction from exercising all their rights and obligations under the transaction documents. This document cannot be reproduced except in full, without prior written approval of the Company. Any unauthorized alteration, forgery or falsification of the content or appearance of this document is unlawful and offenders may be prosecuted to the fullest extent of the law.

- The Electro-optical converter (EOC) performs the conversion between optical and electrical of the signals for the digital communication to the DAE and for the analog signal from the optical surface detection. The EOC is connected to the measurement server.
- The function of the measurement server is to perform the time critical tasks such as signal filtering, control of the robot operation and fast movement interrupts.
- A probe alignment unit which improves the (absolute) accuracy of the probe positioning.
- A computer operating Windows 7.
- DASY 5 software.
- Remote control with teach pendant and additional circuitry for robot safety such as warning lamps, etc.
- The SAM twin phantom enabling testing left-hand and right-hand usage.
- The device holder for handheld mobile phones.
- Tissue simulating liquid mixed according to the given recipes.
- Validation dipole kits allowing to validate the proper functioning of the system.

Unless otherwise stated the results shown in this test report refer only to the sample(s) tested and such sample(s) are retained for 90 days only.
除非另有說明，此報告結果僅對測試之樣品負責，同時此樣品僅保留90天。本報告未經本公司書面許可，不可部份複製。
This document is issued by the Company subject to its General Conditions of Service printed overleaf, available on request or accessible at www.sgs.com/terms_and_conditions.htm and, for electronic format documents, subject to Terms and Conditions for Electronic Documents at www.sgs.com/terms_e-document.htm. Attention is drawn to the limitation of liability, indemnification and jurisdiction issues defined therein. Any holder of this document is advised that information contained hereon reflects the Company's findings at the time of its intervention only and within the limits of Client's instructions, if any. The Company's sole responsibility is to its Client and this document does not exonerate parties to a transaction from exercising all their rights and obligations under the transaction documents. This document cannot be reproduced except in full, without prior written approval of the Company. Any unauthorized alteration, forgery or falsification of the content or appearance of this document is unlawful and offenders may be prosecuted to the fullest extent of the law.

1.8 System Components

EX3DV4 E-Field Probe

Construction	Symmetrical design with triangular core Built-in shielding against static charges PEEK enclosure material (resistant to organic solvents, e.g., DGBE)	
Calibration	Basic Broad Band Calibration in air Conversion Factors (CF) for HSL 835/1750/1900/2450 MHz Additional CF for other liquids and frequencies upon request	
Frequency	10 MHz to > 6 GHz	
Directivity	± 0.3 dB in HSL (rotation around probe axis) ± 0.5 dB in tissue material (rotation normal to probe axis)	
Dynamic Range	10 µW/g to > 100 mW/g Linearity: ± 0.2 dB (noise: typically < 1 µW/g)	
Dimensions	Tip diameter: 2.5 mm	
Application	High precision dosimetric measurements in any exposure scenario (e.g., very strong gradient fields). Only probe which enables compliance testing for frequencies up to 6 GHz with precision of better 30%.	

Unless otherwise stated the results shown in this test report refer only to the sample(s) tested and such sample(s) are retained for 90 days only.
除非另有說明，此報告結果僅對測試之樣品負責，同時此樣品僅保留90天。本報告未經本公司書面許可，不可部份複製。
This document is issued by the Company subject to its General Conditions of Service printed overleaf, available on request or accessible at www.sgs.com/terms_and_conditions.htm and, for electronic format documents, subject to Terms and Conditions for Electronic Documents at www.sgs.com/terms_e-document.htm. Attention is drawn to the limitation of liability, indemnification and jurisdiction issues defined therein. Any holder of this document is advised that information contained hereon reflects the Company's findings at the time of its intervention only and within the limits of Client's instructions, if any. The Company's sole responsibility is to its Client and this document does not exonerate parties to a transaction from exercising all their rights and obligations under the transaction documents. This document cannot be reproduced except in full, without prior written approval of the Company. Any unauthorized alteration, forgery or falsification of the content or appearance of this document is unlawful and offenders may be prosecuted to the fullest extent of the law.

SAM PHANTOM V4.0C

Construction	The shell corresponds to the specifications of the Specific Anthropomorphic Mannequin (SAM) phantom defined in IEEE 1528-200X, CENELEC 50361 and IEC 62209. It enables the dosimetric evaluation of left and right hand phone usage as well as body mounted usage at the flat phantom region. A cover prevents evaporation of the liquid. Reference markings on the phantom allow the complete setup of all predefined phantom positions and measurement grids by manually teaching three points with the robot.	
Shell Thickness	2 ± 0.2 mm	
Filling Volume	Approx. 25 liters	
Dimensions	Height: 850 mm; Length: 1000 mm; Width: 500 mm	

DEVICE HOLDER

Construction	The device holder (Supporter) for Notebook is made by POM (polyoxymethylene resin) , which is non-metal and non-conductive. The height can be adjusted to fit varies kind of notebooks.	 Device Holder

Unless otherwise stated the results shown in this test report refer only to the sample(s) tested and such sample(s) are retained for 90 days only.
除非另有說明，此報告結果僅對測試之樣品負責，同時此樣品僅保留90天。本報告未經本公司書面許可，不可部份複製。
This document is issued by the Company subject to its General Conditions of Service printed overleaf, available on request or accessible at www.sgs.com/terms_and_conditions.htm and, for electronic format documents, subject to Terms and Conditions for Electronic Documents at www.sgs.com/terms_e-document.htm. Attention is drawn to the limitation of liability, indemnification and jurisdiction issues defined therein. Any holder of this document is advised that information contained hereon reflects the Company's findings at the time of its intervention only and within the limits of Client's instructions, if any. The Company's sole responsibility is to its Client and this document does not exonerate parties to a transaction from exercising all their rights and obligations under the transaction documents. This document cannot be reproduced except in full, without prior written approval of the Company. Any unauthorized alteration, forgery or falsification of the content or appearance of this document is unlawful and offenders may be prosecuted to the fullest extent of the law.

1.9 SAR System Verification

The microwave circuit arrangement for system verification is sketched in Fig. b. The daily system accuracy verification occurs within the flat section of the SAM phantom. A SAR measurement was performed to see if the measured SAR was within +/- 10% from the target SAR values. These tests were done at 835/1750/1900/2450 MHz. The tests were conducted on the same days as the measurement of the DUT. The obtained results from the system accuracy verification are displayed in the table 1 (SAR values are normalized to 1W forward power delivered to the dipole). During the tests, the ambient temperature of the laboratory was 21.7°C, the relative humidity was 62% and the liquid depth above the ear reference points was ≥ 15 cm ± 5 mm (frequency ≤ 3 GHz) or ≥ 10 cm ± 5 mm (frequency > 3 G Hz) in all the cases. It is seen that the system is operating within its specification, as the results are within acceptable tolerance of the reference values.

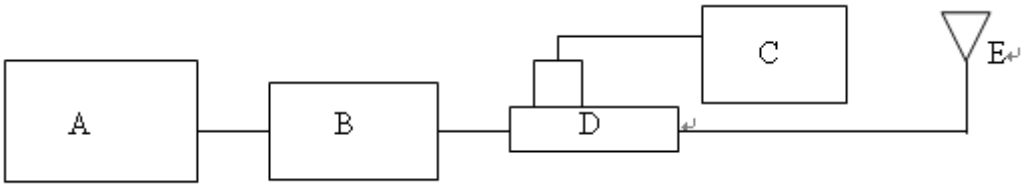

Fig. b The block diagram of system verification

A. Signal generator

B. Amplifier

C. Power meter

D. Dual directional coupling

E. Reference dipole antenna

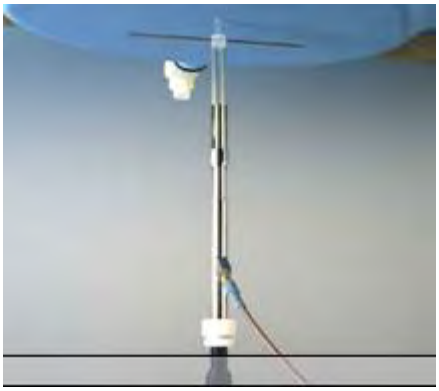

Photograph of the dipole Antenna

Unless otherwise stated the results shown in this test report refer only to the sample(s) tested and such sample(s) are retained for 90 days only.
除非另有說明，此報告結果僅對測試之樣品負責，同時此樣品僅保留90天。本報告未經本公司書面許可，不可部份複製。
This document is issued by the Company subject to its General Conditions of Service printed overleaf, available on request or accessible at www.sgs.com/terms_and_conditions.htm and, for electronic format documents, subject to Terms and Conditions for Electronic Documents at www.sgs.com/terms_e-document.htm. Attention is drawn to the limitation of liability, indemnification and jurisdiction issues defined therein. Any holder of this document is advised that information contained hereon reflects the Company's findings at the time of its intervention only and within the limits of Client's instructions, if any. The Company's sole responsibility is to its Client and this document does not exonerate parties to a transaction from exercising all their rights and obligations under the transaction documents. This document cannot be reproduced except in full, without prior written approval of the Company. Any unauthorized alteration, forgery or falsification of the content or appearance of this document is unlawful and offenders may be prosecuted to the fullest extent of the law.

Validation Kit	S/N	Frequency (MHz)		Target SAR (1g) (Pin=250mW) (mW/g)	Measured SAR (1g)(mW/g)	Deviation (%)	Measured Date
D835V2	4d063	835	Body	2.41	2.44	-1.24%	Sep. 30, 2014
D1750V2	1008	1750	Body	9.44	9.66	-2.33%	Sep. 30, 2014
D1900V2	5d027	1900	Body	9.87	10.2	-3.34%	Oct. 01, 2014
D2450V2	922	2450	Body	12.9	12.9	0.00%	Sep. 29, 2014

Table 1. Results of system validation

Unless otherwise stated the results shown in this test report refer only to the sample(s) tested and such sample(s) are retained for 90 days only.
除非另有說明，此報告結果僅對測試之樣品負責，同時此樣品僅保留90天。本報告未經本公司書面許可，不可部份複製。
This document is issued by the Company subject to its General Conditions of Service printed overleaf, available on request or accessible at www.sgs.com/terms_and_conditions.htm and, for electronic format documents, subject to Terms and Conditions for Electronic Documents at www.sgs.com/terms_e-document.htm. Attention is drawn to the limitation of liability, indemnification and jurisdiction issues defined therein. Any holder of this document is advised that information contained hereon reflects the Company's findings at the time of its intervention only and within the limits of Client's instructions, if any. The Company's sole responsibility is to its Client and this document does not exonerate parties to a transaction from exercising all their rights and obligations under the transaction documents. This document cannot be reproduced except in full, without prior written approval of the Company. Any unauthorized alteration, forgery or falsification of the content or appearance of this document is unlawful and offenders may be prosecuted to the fullest extent of the law.

1.10 Tissue Simulant Fluid for the Frequency Band

The dielectric properties for this body-simulant fluid were measured by using the Agilent Model 85070E Dielectric Probe (rates frequency band 200 MHz to 20 GHz) in conjunction with Network Analyzer (30 KHz-6000 MHz).

All dielectric parameters of tissue simulates were measured within 24 hours of SAR measurements. The depth of the tissue simulant in the flat section of the phantom was ≥ 15 cm ± 5 mm (Frequency ≤3G) or ≥ 10 cm ± 5 mm (Frequency >3G) during all tests. (Fig. 2)

Tissue Type	Measurement Date	Measured Frequency (MHz)	Target Dielectric Constant, εr	Target Conductivity, σ (S/m)	Measured Dielectric Constant, εr	Measured Conductivity, σ (S/m)	% dev εr	% dev σ
Body	Sep. 30, 2014	824.2	55.242	0.969	52.969	0.981	4.11%	-1.22%
		826.4	55.234	0.969	52.951	0.983	4.13%	-1.44%
		835	55.2	0.97	52.877	0.992	4.21%	-2.27%
		848.8	55.158	0.987	52.754	1.007	4.36%	-2.03%
		1712.4	53.531	1.465	54.505	1.434	-1.82%	2.12%
		1732.4	53.478	1.477	54.47	1.448	-1.85%	1.96%
		1750	55.432	1.488	54.4	1.46	1.86%	1.88%
		1752.6	53.425	1.49	54.386	1.462	-1.80%	1.88%
	Oct. 01, 2014	1850.2	53.300	1.520	52.276	1.452	1.92%	4.47%
		1852.4	53.300	1.520	52.265	1.454	1.94%	4.34%
		1880	53.300	1.520	52.099	1.471	2.25%	3.22%
		1900	53.300	1.520	52.004	1.495	2.43%	1.64%
		1907.6	53.300	1.520	51.985	1.505	2.47%	0.99%
		1909.8	53.300	1.520	51.983	1.508	2.47%	0.79%
	Sep. 29, 2014	2412	52.751	1.914	51.511	1.955	2.35%	-2.14%
		2450	52.700	1.950	51.510	2.014	2.26%	-3.28%

Table 2. Dielectric Parameters of Tissue Simulant Fluid

Unless otherwise stated the results shown in this test report refer only to the sample(s) tested and such sample(s) are retained for 90 days only.
除非另有說明，此報告結果僅對測試之樣品負責，同時此樣品僅保留90天。本報告未經本公司書面許可，不可部份複製。
This document is issued by the Company subject to its General Conditions of Service printed overleaf, available on request or accessible at www.sgs.com/terms_and_conditions.htm and, for electronic format documents, subject to Terms and Conditions for Electronic Documents at www.sgs.com/terms_e-document.htm. Attention is drawn to the limitation of liability, indemnification and jurisdiction issues defined therein. Any holder of this document is advised that information contained hereon reflects the Company's findings at the time of its intervention only and within the limits of Client's instructions, if any. The Company's sole responsibility is to its Client and this document does not exonerate parties to a transaction from exercising all their rights and obligations under the transaction documents. This document cannot be reproduced except in full, without prior written approval of the Company. Any unauthorized alteration, forgery or falsification of the content or appearance of this document is unlawful and offenders may be prosecuted to the fullest extent of the law.

The composition of the body tissue simulating liquid:

Frequency (MHz)	Mode	Ingredient						Total amount
		DGMBE	Water	Salt	Preventol D-7	Cellulose	Sugar	
850	Body	—	631.68 g	11.72 g	1.2 g	—	600 g	1.0L(Kg)
1900	Body	300.67 g	716.56 g	4.0 g	—	—	—	1.0L(Kg)
2450	Body	301.7ml	698.3ml	—	—	—	—	1.0L(Kg)

Unless otherwise stated the results shown in this test report refer only to the sample(s) tested and such sample(s) are retained for 90 days only.
除非另有說明，此報告結果僅對測試之樣品負責，同時此樣品僅保留90天。本報告未經本公司書面許可，不可部份複製。
This document is issued by the Company subject to its General Conditions of Service printed overleaf, available on request or accessible at www.sgs.com/terms_and_conditions.htm and, for electronic format documents, subject to Terms and Conditions for Electronic Documents at www.sgs.com/terms_e-document.htm. Attention is drawn to the limitation of liability, indemnification and jurisdiction issues defined therein. Any holder of this document is advised that information contained hereon reflects the Company's findings at the time of its intervention only and within the limits of Client's instructions, if any. The Company's sole responsibility is to its Client and this document does not exonerate parties to a transaction from exercising all their rights and obligations under the transaction documents. This document cannot be reproduced except in full, without prior written approval of the Company. Any unauthorized alteration, forgery or falsification of the content or appearance of this document is unlawful and offenders may be prosecuted to the fullest extent of the law.

1.11 Evaluation Procedures

The entire evaluation of the spatial peak values is performed within the Post-processing engine (SEMCAD). The system always gives the maximum values for the 1 g and 10 g cubes. The algorithm to find the cube with highest averaged SAR is divided into the following stages:

1. The extraction of the measured data (grid and values) from the Zoom Scan.
2. The calculation of the SAR value at every measurement point based on all stored data (A/D values and measurement parameters)
3. The generation of a high-resolution mesh within the measured volume
4. The interpolation of all measured values from the measurement grid to the high-resolution grid
5. The extrapolation of the entire 3-D field distribution to the phantom surface over the distance from sensor to surface
6. The calculation of the averaged SAR within masses of 1g and 10g.

The probe is calibrated at the center of the dipole sensors that is located 1 to 2.7mm away from the probe tip. During measurements, the probe stops shortly above the phantom surface, depending on the probe and the surface detecting system. Both distances are included as parameters in the probe configuration file. The software always knows exactly how far away the measured point is from the surface. As the probe cannot directly measure at the surface, the values between the deepest measured point and the surface must be extrapolated. The angle between the probe axis and the surface normal line is less than 30 degree.

In the Area Scan, the gradient of the interpolation function is evaluated to find all the extreme of the SAR distribution. The uncertainty on the locations of the extreme is less than 1/20 of the grid size. Only local maximum within –2 dB of the global maximum are searched and passed for the Cube Scan measurement. In the Cube Scan, the interpolation function is used to extrapolate the Peak SAR from the lowest measurement points to the inner phantom surface (the extrapolation distance). The uncertainty increases with the extrapolation distance. To keep the uncertainty within 1% for the 1 g and 10 g cubes, the extrapolation distance should not be larger than 5mm.

The maximum search is automatically performed after each area scan measurement. It is based on splines in two or three dimensions. The procedure can find the maximum for most SAR distributions even with relatively large grid spacing. After the area scanning measurement, the probe is automatically moved to a position at the interpolated maximum. The following scan can directly use this position for reference, e.g., for a finer resolution grid or the cube evaluations. The 1g and 10g peak evaluations are only available for the predefined cube 7x7x7 scans. The routines are verified and optimized for the grid dimensions used in these cube measurements.

Unless otherwise stated the results shown in this test report refer only to the sample(s) tested and such sample(s) are retained for 90 days only.
除非另有說明，此報告結果僅對測試之樣品負責，同時此樣品僅保留90天。本報告未經本公司書面許可，不可部份複製。
This document is issued by the Company subject to its General Conditions of Service printed overleaf, available on request or accessible at www.sgs.com/terms_and_conditions.htm and, for electronic format documents, subject to Terms and Conditions for Electronic Documents at www.sgs.com/terms_e-document.htm. Attention is drawn to the limitation of liability, indemnification and jurisdiction issues defined therein. Any holder of this document is advised that information contained hereon reflects the Company's findings at the time of its intervention only and within the limits of Client's instructions, if any. The Company's sole responsibility is to its Client and this document does not exonerate parties to a transaction from exercising all their rights and obligations under the transaction documents. This document cannot be reproduced except in full, without prior written approval of the Company. Any unauthorized alteration, forgery or falsification of the content or appearance of this document is unlawful and offenders may be prosecuted to the fullest extent of the law.

The measured volume of 30x30x30mm contains about 30g of tissue.

The first procedure is an extrapolation (incl. Boundary correction) to get the points between the lowest measured plane and the surface. The next step uses 3D interpolation to get all points within the measured volume. In the last step, a 1g cube is placed numerically into the volume and its averaged SAR is calculated. This cube is the moved around until the highest averaged SAR is found. If the highest SAR is found at the edge of the measured volume, the system will issue a warning: higher SAR values might be found outside of the measured volume. In that case the cube measurement can be repeated, using the new interpolated maximum as the center.

1.12 Probe Calibration Procedures

For the calibration of E-field probes in lossy liquids, an electric field with an accurately known field strength must be produced within the measured liquid. For standardization purposes it would be desirable if all measurements which are necessary to assess the correct field strength would be traceable to standardized measurement procedures. In the following two different calibration techniques are summarized:

1.12.1 Transfer Calibration with Temperature Probes

In lossy liquids the specific absorption rate (SAR) is related both to the electric field (E) and the temperature gradient ($\delta T / \delta t$) in the liquid.

$$SAR = \frac{\sigma}{\rho}|E|^2 = c\frac{\delta T}{\delta t}$$

whereby σ is the conductivity, ρ the density and c the heat capacity of the liquid.

Hence, the electric field in lossy liquid can be measured indirectly by measuring the temperature gradient in the liquid. Non-disturbing temperature probes (optical probes or thermistor probes with resistive lines) with high spatial resolution (<1-2 mm) and fast reaction time (<1 s) are available and can be easily calibrated with high precision [1]. The setup and the exciting source have no influence on the calibration; only the relative positioning uncertainties of the standard temperature probe and the E-field probe to be calibrated must be considered. However, several problems limit the available accuracy of probe calibrations with temperature probes:

- The temperature gradient is not directly measurable but must be evaluated from temperature measurements at different time steps. Special precaution is necessary to avoid measurement errors caused by temperature gradients due to energy equalizing effects or convection currents in the liquid. Such effects cannot be completely avoided, as the measured field itself destroys the thermal equilibrium in the liquid. With a careful setup these errors can be kept small.

Unless otherwise stated the results shown in this test report refer only to the sample(s) tested and such sample(s) are retained for 90 days only.
除非另有說明，此報告結果僅對測試之樣品負責，同時此樣品僅保留90天。本報告未經本公司書面許可，不可部份複製。
This document is issued by the Company subject to its General Conditions of Service printed overleaf, available on request or accessible at www.sgs.com/terms_and_conditions.htm and, for electronic format documents, subject to Terms and Conditions for Electronic Documents at www.sgs.com/terms_e-document.htm. Attention is drawn to the limitation of liability, indemnification and jurisdiction issues defined therein. Any holder of this document is advised that information contained hereon reflects the Company's findings at the time of its intervention only and within the limits of Client's instructions, if any. The Company's sole responsibility is to its Client and this document does not exonerate parties to a transaction from exercising all their rights and obligations under the transaction documents. This document cannot be reproduced except in full, without prior written approval of the Company. Any unauthorized alteration, forgery or falsification of the content or appearance of this document is unlawful and offenders may be prosecuted to the fullest extent of the law.

- The measured volume around the temperature probe is not well defined. It is difficult to calculate the energy transfer from a surrounding gradient temperature field into the probe. These effects must be considered, since temperature probes are calibrated in liquid with homogeneous temperatures. There is no traceable standard for temperature rise measurements.
- The calibration depends on the assessment of the specific density, the heat capacity and the conductivity of the medium. While the specific density and heat capacity can be measured accurately with standardized procedures (~ 2% for c; much better for ρ) , there is no standard for the measurement of the conductivity. Depending on the method and liquid, the error can well exceed ±5%.
- Temperature rise measurements are not very sensitive and therefore are often performed at a higher power level than the E-field measurements. The nonlinearities in the system (e.g., power measurements, different components, etc.) must be considered.

Considering these problems, the possible accuracy of the calibration of E-field probes with temperature gradient measurements in a carefully designed setup is about ±10% (RSS) [2]. Recently, a setup which is a combination of the waveguide techniques and the thermal measurements was presented in [3]. The estimated uncertainty of the setup is ±5% (RSS) when the same liquid is used for the calibration and for actual measurements and ±7-9% (RSS) when not, which is in good agreement with the estimates given in [2].

1.12.2 Calibration with Analytical Fields

In this method a technical setup is used in which the field can be calculated analytically from measurements of other physical magnitudes (e.g., input power). This corresponds to the standard field method for probe calibration in air; however, there is no standard defined for fields in lossy liquids.

When using calculated fields in lossy liquids for probe calibration, several points must be considered in the assessment of the uncertainty:

- The setup must enable accurate determination of the incident power.
- The accuracy of the calculated field strength will depend on the assessment of the dielectric parameters of the liquid.
- Due to the small wavelength in liquids with high permittivity, even small setups might be above the resonant cutoff frequencies. The field distribution in the setup must be carefully checked for conformity with the theoretical field distribution.

Unless otherwise stated the results shown in this test report refer only to the sample(s) tested and such sample(s) are retained for 90 days only.
除非另有說明，此報告結果僅對測試之樣品負責，同時此樣品僅保留90天。本報告未經本公司書面許可，不可部份複製。
This document is issued by the Company subject to its General Conditions of Service printed overleaf, available on request or accessible at www.sgs.com/terms_and_conditions.htm and, for electronic format documents, subject to Terms and Conditions for Electronic Documents at www.sgs.com/terms_e-document.htm. Attention is drawn to the limitation of liability, indemnification and jurisdiction issues defined therein. Any holder of this document is advised that information contained hereon reflects the Company's findings at the time of its intervention only and within the limits of Client's instructions, if any. The Company's sole responsibility is to its Client and this document does not exonerate parties to a transaction from exercising all their rights and obligations under the transaction documents. This document cannot be reproduced except in full, without prior written approval of the Company. Any unauthorized alteration, forgery or falsification of the content or appearance of this document is unlawful and offenders may be prosecuted to the fullest extent of the law.

References

[1] N. Kuster, Q. Balzano, and J.C. Lin, Eds., *Mobile Communications Safety*, Chapman & Hall, London, 1997.

[2] K. Meier, M. Burkhardt, T. Schmid, and N. Kuster, \Broadband calibration of E-field probes in lossy media", *IEEE Transactions on Microwave Theory and Techniques*, vol. 44, no. 10, pp. 1954{1962, Oct. 1996.

[3] K. Jokela, P. Hyysalo, and L. Puranen, \Calibration of specific absorption rate (SAR) probes in waveguide at 900 MHz", *IEEE Transactions on Instrumentation and Measurements*, vol. 47, no. 2, pp. 432{438, Apr. 1998.

Unless otherwise stated the results shown in this test report refer only to the sample(s) tested and such sample(s) are retained for 90 days only.
除非另有說明，此報告結果僅對測試之樣品負責，同時此樣品僅保留90天。本報告未經本公司書面許可，不可部份複製。

This document is issued by the Company subject to its General Conditions of Service printed overleaf, available on request or accessible at www.sgs.com/terms_and_conditions.htm and, for electronic format documents, subject to Terms and Conditions for Electronic Documents at www.sgs.com/terms_e-document.htm. Attention is drawn to the limitation of liability, indemnification and jurisdiction issues defined therein. Any holder of this document is advised that information contained hereon reflects the Company's findings at the time of its intervention only and within the limits of Client's instructions, if any. The Company's sole responsibility is to its Client and this document does not exonerate parties to a transaction from exercising all their rights and obligations under the transaction documents. This document cannot be reproduced except in full, without prior written approval of the Company. Any unauthorized alteration, forgery or falsification of the content or appearance of this document is unlawful and offenders may be prosecuted to the fullest extent of the law.

1.13 Test Standards and Limits

According to FCC 47CFR §2.1093(d) The limits to be used for evaluation are based generally on criteria published by the American National Standards Institute (ANSI) for localized specific absorption rate ("SAR") in Section 4.2 of "IEEE Standard for Safety Levels with Respect to Human Exposure to Radio Frequency Electromagnetic Fields, 3 kHz to 300 GHz," ANSI/IEEE C95.1–1992, Copyright 1992 by the Institute of Electrical and Electronics Engineers, Inc., New York, New York 10017. These criteria for SAR evaluation are similar to those recommended by the National Council on Radiation Protection and Measurements (NCRP) in "Biological Effects and Exposure Criteria for Radio frequency Electromagnetic Fields," NCRP Report No. 86, Section 17.4.5. Copyright NCRP, 1986, Bethesda, Maryland 20814. SAR is a measure of the rate of energy absorption due to exposure to an RF transmitting source. SAR values have been related to threshold levels for potential biological hazards. The criteria to be used are specified in paragraphs (d)(1) and (d)(2) of this section and shall apply for portable devices transmitting in the frequency range from 100 kHz to 6 GHz. Portable devices that transmit at frequencies above 6 GHz are to be evaluated in terms of the MPE limits specified in § 1.1310 of this chapter. Measurements and calculations to demonstrate compliance with MPE field strength or power density limits for devices operating above 6 GHz should be made at a minimum distance of 5 cm from the radiating source.

(1) Limits for Occupational/Controlled exposure: 0.4 W/kg as averaged over the whole-body and spatial peak SAR not exceeding 8 W/kg as averaged over any 1 gram of tissue (defined as a tissue volume in the shape of a cube). Exceptions are the hands, wrists, feet and ankles where the spatial peak SAR shall not exceed 20 W/kg, as averaged over an 10 grams of tissue (defined as a tissue volume in the shape of a cube).

(2) Occupational/Controlled limits apply when persons are exposed as a consequence of their employment provided these persons are fully aware of and exercise control over their exposure. Awareness of exposure can be accomplished by use of warning labels or by specific training or education through appropriate means, such as an RF safety program in a work environment.

(3) Limits for General Population/Uncontrolled exposure: 0.08 W/kg as averaged over the whole-body and spatial peak SAR not exceeding 1.6 W/kg as averaged over any 1 gram of tissue (defined as a tissue volume in the shape of a cube). Exceptions are the hands, wrists, feet and ankles where the spatial peak SAR shall not exceed 4 W/kg, as averaged over any 10 grams of tissue (defined as a tissue volume in the shape of a cube). General Population/Uncontrolled limits apply when the general public may be exposed, or when persons that are exposed as a consequence of their employment may not be fully aware of the potential for exposure or do not exercise control over their exposure. Warning labels placed on consumer devices such as cellular telephones will not be sufficient reason to allow these devices to be evaluated subject to limits for occupational/controlled exposure in paragraph (d)(1)

Unless otherwise stated the results shown in this test report refer only to the sample(s) tested and such sample(s) are retained for 90 days only.
除非另有說明，此報告結果僅對測試之樣品負責，同時此樣品僅保留90天。本報告未經本公司書面許可，不可部份複製。
This document is issued by the Company subject to its General Conditions of Service printed overleaf, available on request or accessible at www.sgs.com/terms_and_conditions.htm and, for electronic format documents, subject to Terms and Conditions for Electronic Documents at www.sgs.com/terms_e-document.htm. Attention is drawn to the limitation of liability, indemnification and jurisdiction issues defined therein. Any holder of this document is advised that information contained hereon reflects the Company's findings at the time of its intervention only and within the limits of Client's instructions, if any. The Company's sole responsibility is to its Client and this document does not exonerate parties to a transaction from exercising all their rights and obligations under the transaction documents. This document cannot be reproduced except in full, without prior written approval of the Company. Any unauthorized alteration, forgery or falsification of the content or appearance of this document is unlawful and offenders may be prosecuted to the fullest extent of the law.

of this section. (Table 4.)

Human Exposure	Uncontrolled Environment General Population	Controlled Environment Occupational
Spatial Peak SAR (Brain)	1.60 m W/g	8.00 m W/g
Spatial Average SAR (Whole Body)	0.08 m W/g	0.40 m W/g
Spatial Peak SAR (Hands/Feet/Ankle/Wrist)	4.00 m W/g	20.00 m W/g

Table 4. RF exposure limits

Notes:
1. Uncontrolled environments are defined as locations where there is potential exposure of individuals who have no knowledge or control of their potential exposure.
2. Controlled environments are defined as locations where there is potential exposure of individuals who have knowledge of their potential exposure and can exercise control over their exposure.

Unless otherwise stated the results shown in this test report refer only to the sample(s) tested and such sample(s) are retained for 90 days only.
除非另有說明，此報告結果僅對測試之樣品負責，同時此樣品僅保留90天。本報告未經本公司書面許可，不可部份複製。
This document is issued by the Company subject to its General Conditions of Service printed overleaf, available on request or accessible at www.sgs.com/terms_and_conditions.htm and, for electronic format documents, subject to Terms and Conditions for Electronic Documents at www.sgs.com/terms_e-document.htm. Attention is drawn to the limitation of liability, indemnification and jurisdiction issues defined therein. Any holder of this document is advised that information contained hereon reflects the Company's findings at the time of its intervention only and within the limits of Client's instructions, if any. The Company's sole responsibility is to its Client and this document does not exonerate parties to a transaction from exercising all their rights and obligations under the transaction documents. This document cannot be reproduced except in full, without prior written approval of the Company. Any unauthorized alteration, forgery or falsification of the content or appearance of this document is unlawful and offenders may be prosecuted to the fullest extent of the law.

2. Summary of Results

GPRS 850 MHz (without power reduction)

Mode	Position	Distance (mm)	CH	Freq. (MHz)	Max. Rated Avg. Power + Max. Tolerance (dBm)	Measured Avg. Power (dBm)	Scaling	Averaged SAR over 1g (W/kg)		Plot page
								Measured	Reported	
GPRS (1D2UP)	Back side	19mm	190	836.6	31	29.8	31.83%	0.124	0.163	-
	Top side	23mm	190	836.6	31	29.8	31.83%	0.079	0.104	-
	Left side	5mm	190	836.6	31	29.8	31.83%	0.084	0.111	-

GPRS 850 MHz (with power reduction)

Mode	Position	Distance (mm)	CH	Freq. (MHz)	Max. Rated Avg. Power + Max. Tolerance (dBm)	Measured Avg. Power (dBm)	Scaling	Averaged SAR over 1g (W/kg)		Plot page
								Measured	Reported	
GPRS (1D2UP)	Back side	0mm	128	824.2	28.5	27.1	38.04%	0.747	1.031	-
	Back side	0mm	190	836.6	28.5	27.2	34.90%	0.767	1.035	-
	Back side	0mm	251	848.8	28.5	27.2	34.90%	0.854	1.152	-
	Back side*	0mm	251	848.8	28.5	27.2	34.90%	0.883	1.191	58
	Top side	0mm	128	824.2	28.5	27.1	38.04%	0.612	0.845	-
	Top side	0mm	190	836.6	28.5	27.2	34.90%	0.61	0.823	-
	Top side	0mm	251	848.8	28.5	27.2	34.90%	0.598	0.807	-
	Left side	0mm	190	836.6	28.5	27.2	34.90%	0.324	0.437	-

* - repeated at the highest SAR measurement according to the KDB 865664 D01

Unless otherwise stated the results shown in this test report refer only to the sample(s) tested and such sample(s) are retained for 90 days only.
除非另有說明，此報告結果僅對測試之樣品負責，同時此樣品僅保留90天。本報告未經本公司書面許可，不可部份複製。
This document is issued by the Company subject to its General Conditions of Service printed overleaf, available on request or accessible at www.sgs.com/terms_and_conditions.htm and, for electronic format documents, subject to Terms and Conditions for Electronic Documents at www.sgs.com/terms_e-document.htm. Attention is drawn to the limitation of liability, indemnification and jurisdiction issues defined therein. Any holder of this document is advised that information contained hereon reflects the Company's findings at the time of its intervention only and within the limits of Client's instructions, if any. The Company's sole responsibility is to its Client and this document does not exonerate parties to a transaction from exercising all their rights and obligations under the transaction documents. This document cannot be reproduced except in full, without prior written approval of the Company. Any unauthorized alteration, forgery or falsification of the content or appearance of this document is unlawful and offenders may be prosecuted to the fullest extent of the law.

GPRS 1900 MHz (without power reduction)

Mode	Position	Distance (mm)	CH	Freq. (MHz)	Max. Rated Avg. Power + Max. Tolerance (dBm)	Measured Avg. Power (dBm)	Scaling	Averaged SAR over 1g (W/kg)		Plot page
								Measured	Reported	
GPRS (1Dn2UP)	Back side	19mm	512	1850.2	28	26.4	44.54%	0.117	0.169	-
	Top side	23mm	512	1850.2	28	26.4	44.54%	0.039	0.056	-
	Left side	5mm	512	1850.2	28	26.4	44.54%	0.113	0.163	-

GPRS 1900 MHz (with power reduction)

Mode	Position	Distance (mm)	CH	Freq. (MHz)	Max. Rated Avg. Power + Max. Tolerance (dBm)	Measured Avg. Power (dBm)	Scaling	Averaged SAR over 1g (W/kg)		Plot page
								Measured	Reported	
GPRS (1Dn2UP)	Back side	0mm	661	1880	22.5	21	41.25%	0.432	0.610	-
	Top side	0mm	512	1850.2	22.5	21	41.25%	0.663	0.937	59
	Top side	0mm	661	1880	22.5	21	41.25%	0.588	0.831	-
	Top side	0mm	810	1909.8	22.5	20.8	47.91%	0.528	0.781	-
	Top side*	0mm	512	1850.2	22.5	21	41.25%	0.663	0.937	60
	Left side	0mm	661	1880	22.5	21	41.25%	0.489	0.691	-

* - repeated at the highest SAR measurement according to the KDB 865664 D01

Unless otherwise stated the results shown in this test report refer only to the sample(s) tested and such sample(s) are retained for 90 days only.
除非另有說明，此報告結果僅對測試之樣品負責，同時此樣品僅保留90天。本報告未經本公司書面許可，不可部份複製。
This document is issued by the Company subject to its General Conditions of Service printed overleaf, available on request or accessible at www.sgs.com/terms_and_conditions.htm and, for electronic format documents, subject to Terms and Conditions for Electronic Documents at www.sgs.com/terms_e-document.htm. Attention is drawn to the limitation of liability, indemnification and jurisdiction issues defined therein. Any holder of this document is advised that information contained hereon reflects the Company's findings at the time of its intervention only and within the limits of Client's instructions, if any. The Company's sole responsibility is to its Client and this document does not exonerate parties to a transaction from exercising all their rights and obligations under the transaction documents. This document cannot be reproduced except in full, without prior written approval of the Company. Any unauthorized alteration, forgery or falsification of the content or appearance of this document is unlawful and offenders may be prosecuted to the fullest extent of the law.

WCDMA Band II (without power reduction)

Mode	Position	Distance (mm)	CH	Freq. (MHz)	Max. Rated Avg. Power + Max. Tolerance (dBm)	Measured Avg. Power (dBm)	Scaling	Averaged SAR over 1g (W/kg)		Plot page
								Measured	Reported	
WCDMA Band II	Back side	19mm	9262	1852.4	23.5	22.65	21.62%	0.163	0.198	-
	Top side	23mm	9262	1852.4	23.5	22.65	21.62%	0.309	0.376	-
	Left side	5mm	9262	1852.4	23.5	22.65	21.62%	0.279	0.339	-

WCDMA Band II (with power reduction)

Mode	Position	Distance (mm)	CH	Freq. (MHz)	Max. Rated Avg. Power + Max. Tolerance (dBm)	Measured Avg. Power (dBm)	Scaling	Averaged SAR over 1g (W/kg)		Plot page
								Measured	Reported	
WCDMA Band II	Back side	0mm	9262	1852.4	16.5	16.20	7.15%	0.745	0.798	-
	Top side	0mm	9262	1852.4	16.5	16.20	7.15%	1.08	1.157	-
	Top side	0mm	9400	1880	16.5	15.84	16.41%	0.965	1.123	-
	Top side	0mm	9538	1907.6	16.5	15.67	21.06%	0.887	1.074	-
	Top side*	0mm	9262	1852.4	16.5	16.20	7.15%	1.11	1.189	61
	Left side	0mm	9262	1852.4	16.5	16.20	7.15%	0.151	0.162	-

* - repeated at the highest SAR measurement according to the KDB 865664 D01

Unless otherwise stated the results shown in this test report refer only to the sample(s) tested and such sample(s) are retained for 90 days only.
除非另有說明，此報告結果僅對測試之樣品負責，同時此樣品僅保留90天。本報告未經本公司書面許可，不可部份複製。
This document is issued by the Company subject to its General Conditions of Service printed overleaf, available on request or accessible at www.sgs.com/terms_and_conditions.htm and, for electronic format documents, subject to Terms and Conditions for Electronic Documents at www.sgs.com/terms_e-document.htm. Attention is drawn to the limitation of liability, indemnification and jurisdiction issues defined therein. Any holder of this document is advised that information contained hereon reflects the Company's findings at the time of its intervention only and within the limits of Client's instructions, if any. The Company's sole responsibility is to its Client and this document does not exonerate parties to a transaction from exercising all their rights and obligations under the transaction documents. This document cannot be reproduced except in full, without prior written approval of the Company. Any unauthorized alteration, forgery or falsification of the content or appearance of this document is unlawful and offenders may be prosecuted to the fullest extent of the law.

WCDMA Band IV (without power reduction)

Mode	Position	Distance (mm)	CH	Freq. (MHz)	Max. Rated Avg. Power + Max. Tolerance (dBm)	Measured Avg. Power (dBm)	Scaling	Averaged SAR over 1g (W/kg)		Plot page
								Measured	Reported	
WCDMA Band IV	Back side	19mm	1312	1712.4	23.5	22.72	19.67%	0.141	0.169	-
	Top side	23mm	1312	1712.4	23.5	22.72	19.67%	0.225	0.269	-
	Left side	5mm	1312	1712.4	23.5	22.72	19.67%	0.26	0.311	-

WCDMA Band IV (with power reduction)

Mode	Position	Distance (mm)	CH	Freq. (MHz)	Max. Rated Avg. Power + Max. Tolerance (dBm)	Measured Avg. Power (dBm)	Scaling	Averaged SAR over 1g (W/kg)		Plot page
								Measured	Reported	
WCDMA Band IV	Back side	0mm	1312	1712.4	14.5	13.98	12.72%	0.343	0.387	-
	Top side	0mm	1312	1712.4	14.5	13.98	12.72%	0.833	0.939	-
	Top side	0mm	1412	1732.4	14.5	13.37	29.72%	0.906	1.175	-
	Top side	0mm	1513	1752.6	14.5	13.70	20.23%	0.795	0.956	-
	Top side*	0mm	1412	1732.4	14.5	13.37	29.72%	0.917	1.190	62
	Left side	0mm	1312	1712.4	14.5	13.98	12.72%	0.082	0.092	-

* - repeated at the highest SAR measurement according to the KDB 865664 D01

WCDMA Band V (without power reduction)

Mode	Position	Distance (mm)	CH	Freq. (MHz)	Max. Rated Avg. Power + Max. Tolerance (dBm)	Measured Avg. Power (dBm)	Scaling	Averaged SAR over 1g (W/kg)		Plot page
								Measured	Reported	
WCDMA Band V	Back side	19mm	4132	826.4	23.5	23.18	7.65%	0.181	0.195	-
	Top side	23mm	4132	826.4	23.5	23.18	7.65%	0.144	0.155	-
	Left side	5mm	4132	826.4	23.5	23.18	7.65%	0.131	0.141	-

WCDMA Band V (with power reduction)

Mode	Position	Distance (mm)	CH	Freq. (MHz)	Max. Rated Avg. Power + Max. Tolerance (dBm)	Measured Avg. Power (dBm)	Scaling	Averaged SAR over 1g (W/kg)		Plot page
								Measured	Reported	
WCDMA Band V	Back side	0mm	4132	826.4	21	20.70	7.15%	0.707	0.758	63
	Top side	0mm	4132	826.4	21	20.70	7.15%	0.625	0.670	-
	Left side	0mm	4132	826.4	21	20.70	7.15%	0.154	0.165	-

Unless otherwise stated the results shown in this test report refer only to the sample(s) tested and such sample(s) are retained for 90 days only.
除非另有說明，此報告結果僅對測試之樣品負責，同時此樣品僅保留90天。本報告未經本公司書面許可，不可部份複製。
This document is issued by the Company subject to its General Conditions of Service printed overleaf, available on request or accessible at www.sgs.com/terms_and_conditions.htm and, for electronic format documents, subject to Terms and Conditions for Electronic Documents at www.sgs.com/terms_e-document.htm. Attention is drawn to the limitation of liability, indemnification and jurisdiction issues defined therein. Any holder of this document is advised that information contained hereon reflects the Company's findings at the time of its intervention only and within the limits of Client's instructions, if any. The Company's sole responsibility is to its Client and this document does not exonerate parties to a transaction from exercising all their rights and obligations under the transaction documents. This document cannot be reproduced except in full, without prior written approval of the Company. Any unauthorized alteration, forgery or falsification of the content or appearance of this document is unlawful and offenders may be prosecuted to the fullest extent of the law.

WLAN802.11b

Band	Position	CH	Freq. (MHz)	Max. Rated Avg. Power + Max. Tolerance (dBm)	Measured Avg. Power (dBm)	Scaling	Averaged SAR over 1g (W/kg)		Plot page
							Measured	Reported	
WLAN802.11b	Back side	1	2412	16.00	15.97	0.69%	0.575	0.579	64
	Bottom side	1	2412	16.00	15.97	0.69%	0.251	0.253	-

Test distance is 0mm.

Unless otherwise stated the results shown in this test report refer only to the sample(s) tested and such sample(s) are retained for 90 days only.
除非另有說明，此報告結果僅對測試之樣品負責，同時此樣品僅保留90天。本報告未經本公司書面許可，不可部份複製。
This document is issued by the Company subject to its General Conditions of Service printed overleaf, available on request or accessible at www.sgs.com/terms_and_conditions.htm and, for electronic format documents, subject to Terms and Conditions for Electronic Documents at www.sgs.com/terms_e-document.htm. Attention is drawn to the limitation of liability, indemnification and jurisdiction issues defined therein. Any holder of this document is advised that information contained hereon reflects the Company's findings at the time of its intervention only and within the limits of Client's instructions, if any. The Company's sole responsibility is to its Client and this document does not exonerate parties to a transaction from exercising all their rights and obligations under the transaction documents. This document cannot be reproduced except in full, without prior written approval of the Company. Any unauthorized alteration, forgery or falsification of the content or appearance of this document is unlawful and offenders may be prosecuted to the fullest extent of the law.

3. Simultaneous Transmission Analysis

Simultaneous Transmission Scenarios:

Simultaneous Transmit Configurations	Body
GPRS850/1900 + 2.4GHz WLAN	Yes
WCDMA B2/4/5 + 2.4GHz WLAN	Yes
GPRS850/1900 + BT	Yes
WCDMA B2/4/5 + BT	Yes

Note:
1. WWAN and WLAN antennas may transmit simultaneously.
2. Bluetooth and WLAN share the same antenna path and cannot transmit simultaneously.
3. This device doesn't support voice transmission capability.

Unless otherwise stated the results shown in this test report refer only to the sample(s) tested and such sample(s) are retained for 90 days only.
除非另有說明，此報告結果僅對測試之樣品負責，同時此樣品僅保留90天。本報告未經本公司書面許可，不可部份複製。
This document is issued by the Company subject to its General Conditions of Service printed overleaf, available on request or accessible at www.sgs.com/terms_and_conditions.htm and, for electronic format documents, subject to Terms and Conditions for Electronic Documents at www.sgs.com/terms_e-document.htm. Attention is drawn to the limitation of liability, indemnification and jurisdiction issues defined therein. Any holder of this document is advised that information contained hereon reflects the Company's findings at the time of its intervention only and within the limits of Client's instructions, if any. The Company's sole responsibility is to its Client and this document does not exonerate parties to a transaction from exercising all their rights and obligations under the transaction documents. This document cannot be reproduced except in full, without prior written approval of the Company. Any unauthorized alteration, forgery or falsification of the content or appearance of this document is unlawful and offenders may be prosecuted to the fullest extent of the law.

3.1 Estimated SAR calculation

According to KDB447498 D01v05 – When standalone SAR test exclusion applies to an antenna that transmits simultaneously with other antennas, the standalone SAR must be estimated according to following to determine simultaneous transmission SAR test exclusion:

$$\text{Estimated SAR} = \frac{\text{Max. tune up power(mW)}}{\text{Min. test separation distance(mm)}} \times \frac{\sqrt{f(\text{GHz})}}{7.5}$$

If the minimum test separation distance is < 5mm, a distance of 5mm is used for estimated SAR calculation. When the test separation distance is >50mm, the 0.4W/kg is used for SAR-1g.

Mode / Band	frequency(GHz)	Max. tune-up power(dBm)	Test position	test separation distance(mm)	Estimated SAR(W/kg)
GPRS 850 (class 10)	0.8488	31	Bottom side	193.2	0.4
GPRS 1900 (class 10)	1.9098	28	Bottom side	193.2	0.4
WCDMA B2	1.9076	23.5	Bottom side	193.2	0.4
WCDMA B4	1.7526	23.5	Bottom side	193.2	0.4
WCDMA B5	0.8466	23.5	Bottom side	193.2	0.4
WLAN	2.462	16	Top side	192.68	0.4
WLAN	2.462	16	Left side	48.5	0.172

Mode / Band	frequency(GHz)	Maximum power(dBm)	Test position	test separation distance(mm)	Estimated SAR(W/kg)
BT	2.48	4.71	Top side	192.68	0.4
BT	2.48	4.71	Left side	48.5	0.013
BT	2.48	4.71	Bottom / Back sides	0	0.124

Unless otherwise stated the results shown in this test report refer only to the sample(s) tested and such sample(s) are retained for 90 days only.
除非另有說明，此報告結果僅對測試之樣品負責，同時此樣品僅保留90天。本報告未經本公司書面許可，不可部份複製。
This document is issued by the Company subject to its General Conditions of Service printed overleaf, available on request or accessible at www.sgs.com/terms_and_conditions.htm and, for electronic format documents, subject to Terms and Conditions for Electronic Documents at www.sgs.com/terms_e-document.htm. Attention is drawn to the limitation of liability, indemnification and jurisdiction issues defined therein. Any holder of this document is advised that information contained hereon reflects the Company's findings at the time of its intervention only and within the limits of Client's instructions, if any. The Company's sole responsibility is to its Client and this document does not exonerate parties to a transaction from exercising all their rights and obligations under the transaction documents. This document cannot be reproduced except in full, without prior written approval of the Company. Any unauthorized alteration, forgery or falsification of the content or appearance of this document is unlawful and offenders may be prosecuted to the fullest extent of the law.

3.2 SPLSR evaluation and analysis

Per KDB447498D01, when the sum of SAR is larger than the limit, SAR test exclusion is determined by the SAR sum to peak location separation ratio(SPLSR).

The simultaneous transmitting antennas in each operating mode and exposure condition combination must be considered one pair at a time to determine the SAR to peak location separation ratio to qualify for test exclusion.

The ratio is determined by **(SAR1 + SAR2)^1.5/Ri**, rounded to two decimal digits, and must be **≤ 0.04** for all antenna pairs in the configuration to qualify for 1-g SAR test exclusion.

SAR1 and SAR2 are the highest reported or estimated SAR for each antenna in the pair, and Ri is the separation distance between the peak SAR locations for the antenna pair in mm.

When standalone test exclusion applies, SAR is estimated; the peak location is assumed to be at the feed-point or geometric center of the antenna.

Unless otherwise stated the results shown in this test report refer only to the sample(s) tested and such sample(s) are retained for 90 days only.
除非另有說明，此報告結果僅對測試之樣品負責，同時此樣品僅保留90天。本報告未經本公司書面許可，不可部份複製。
This document is issued by the Company subject to its General Conditions of Service printed overleaf, available on request or accessible at www.sgs.com/terms_and_conditions.htm and, for electronic format documents, subject to Terms and Conditions for Electronic Documents at www.sgs.com/terms_e-document.htm. Attention is drawn to the limitation of liability, indemnification and jurisdiction issues defined therein. Any holder of this document is advised that information contained hereon reflects the Company's findings at the time of its intervention only and within the limits of Client's instructions, if any. The Company's sole responsibility is to its Client and this document does not exonerate parties to a transaction from exercising all their rights and obligations under the transaction documents. This document cannot be reproduced except in full, without prior written approval of the Company. Any unauthorized alteration, forgery or falsification of the content or appearance of this document is unlawful and offenders may be prosecuted to the fullest extent of the law.

GPRS 850 + 2.4GHz WLAN

No.	Conditions	Exposure Condition	Position	Distance (mm)	Max. GPRS850	Max. WLAN	SAR Summation	SPLSR Analysis
1	GPRS850 + 2.4GHz WLAN	Body	Back side	0	1.191	0.579	**1.77**	Analyzed as below
			Back side	19	0.163	Less than 0.579	Less than 0.742	ΣSAR<1.6, Not required
			Top side	0	0.845	0.4 (estimated SAR)	1.245	ΣSAR<1.6, Not required
			Top side	23	0.104	0.4 (estimated SAR)	Less than 0.504	ΣSAR<1.6, Not required
			Left side	0	0.437	0.172 (estimated SAR)	0.609	ΣSAR<1.6, Not required
			Left side	5	0.111	0.172 (estimated SAR)	Less than 0.283	ΣSAR<1.6, Not required
			Bottom side	0	0.4 (estimated SAR)	0.253	0.653	ΣSAR<1.6, Not required

Conditions	Exposure Condition	Position	SAR Value (W/kg)	Coordinates (cm)			Peak Location Separation Distance (mm)	SPLSR	Simultaneous Transmission SAR Test
				x	y	z			
GPRS850 CH 251	Body	Back side	1.191	-10.74	-9.33	-0.82	196.1	0.012	SPLSR<0.04, Not required
802.11b CH 1			0.579	-6.32	9.78	-0.82			

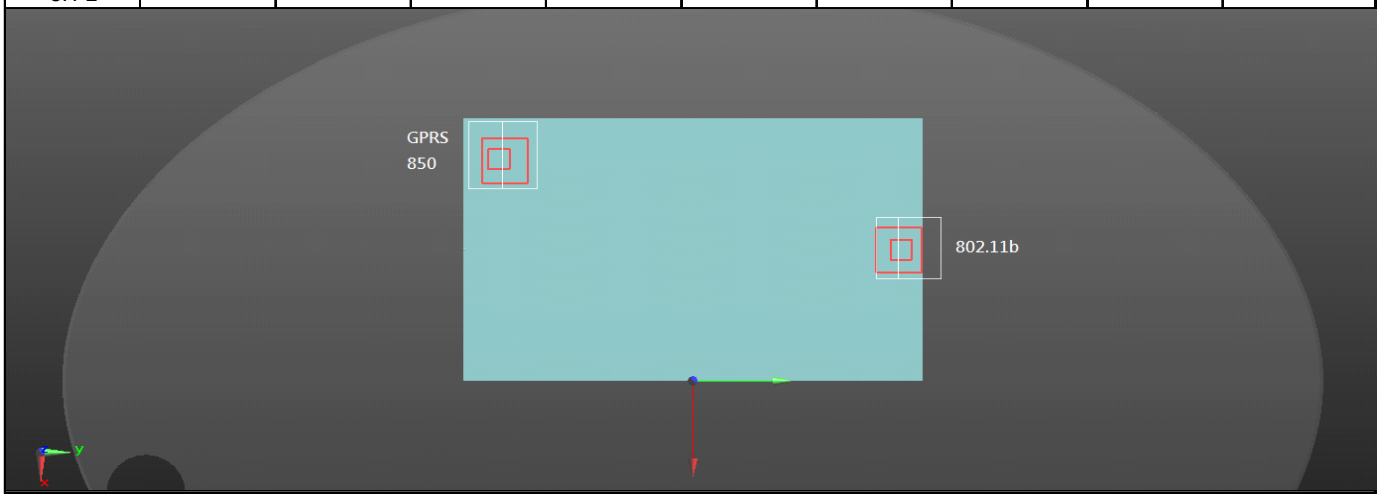

Unless otherwise stated the results shown in this test report refer only to the sample(s) tested and such sample(s) are retained for 90 days only.
除非另有說明，此報告結果僅對測試之樣品負責，同時此樣品僅保留90天。本報告未經本公司書面許可，不可部份複製。
This document is issued by the Company subject to its General Conditions of Service printed overleaf, available on request or accessible at www.sgs.com/terms_and_conditions.htm and, for electronic format documents, subject to Terms and Conditions for Electronic Documents at www.sgs.com/terms_e-document.htm. Attention is drawn to the limitation of liability, indemnification and jurisdiction issues defined therein. Any holder of this document is advised that information contained hereon reflects the Company's findings at the time of its intervention only and within the limits of Client's instructions, if any. The Company's sole responsibility is to its Client and this document does not exonerate parties to a transaction from exercising all their rights and obligations under the transaction documents. This document cannot be reproduced except in full, without prior written approval of the Company. Any unauthorized alteration, forgery or falsification of the content or appearance of this document is unlawful and offenders may be prosecuted to the fullest extent of the law.

GPRS 1900 + 2.4GHz WLAN

No.	Conditions	Exposure Condition	Position	Distance (mm)	Max. GPRS1900	Max. WLAN	SAR Summation	SPLSR Analysis
2	GPRS1900 + 2.4GHz WLAN	Body	Back side	0	0.61	0.579	1.189	ΣSAR<1.6, Not required
			Back side	19	0.169	Less than 0.579	Less than 0.748	ΣSAR<1.6, Not required
			Top side	0	0.937	0.4 (estimated SAR)	1.337	ΣSAR<1.6, Not required
			Top side	23	0.056	0.4 (estimated SAR)	Less than 0.456	ΣSAR<1.6, Not required
			Left side	0	0.691	0.172 (estimated SAR)	0.863	ΣSAR<1.6, Not required
			Left side	5	0.163	0.172 (estimated SAR)	Less than 0.335	ΣSAR<1.6, Not required
			Bottom side	0	0.4 (estimated SAR)	0.253	0.653	ΣSAR<1.6, Not required

WCDMA Band II + 2.4GHz WLAN

No.	Conditions	Exposure Condition	Position	Distance (mm)	Max. WCDMA B2	Max. WLAN	SAR Summation	SPLSR Analysis
3	WCDMA B2 + 2.4GHz WLAN	Body	Back side	0	0.798	0.579	1.377	ΣSAR<1.6, Not required
			Back side	19	0.198	Less than 0.579	Less than 0.777	ΣSAR<1.6, Not required
			Top side	0	1.189	0.4 (estimated SAR)	1.589	ΣSAR<1.6, Not required
			Top side	23	0.376	0.4 (estimated SAR)	Less than 0.776	ΣSAR<1.6, Not required
			Left side	0	0.162	0.172 (estimated SAR)	0.334	ΣSAR<1.6, Not required
			Left side	5	0.339	0.172 (estimated SAR)	Less than 0.511	ΣSAR<1.6, Not required
			Bottom side	0	0.4 (estimated SAR)	0.253	0.653	ΣSAR<1.6, Not required

Unless otherwise stated the results shown in this test report refer only to the sample(s) tested and such sample(s) are retained for 90 days only.
除非另有說明，此報告結果僅對測試之樣品負責，同時此樣品僅保留90天。本報告未經本公司書面許可，不可部份複製。
This document is issued by the Company subject to its General Conditions of Service printed overleaf, available on request or accessible at www.sgs.com/terms_and_conditions.htm and, for electronic format documents, subject to Terms and Conditions for Electronic Documents at www.sgs.com/terms_e-document.htm. Attention is drawn to the limitation of liability, indemnification and jurisdiction issues defined therein. Any holder of this document is advised that information contained hereon reflects the Company's findings at the time of its intervention only and within the limits of Client's instructions, if any. The Company's sole responsibility is to its Client and this document does not exonerate parties to a transaction from exercising all their rights and obligations under the transaction documents. This document cannot be reproduced except in full, without prior written approval of the Company. Any unauthorized alteration, forgery or falsification of the content or appearance of this document is unlawful and offenders may be prosecuted to the fullest extent of the law.

WCDMA Band IV + 2.4GHz WLAN

No.	Conditions	Exposure Condition	Position	Distance (mm)	Max. WCDMA B4	Max. WLAN	SAR Summation	SPLSR Analysis
4	WCDMA B4 + 2.4GHz WLAN	Body	Back side	0	0.387	0.579	0.966	ΣSAR<1.6, Not required
			Back side	19	0.169	Less than 0.579	Less than 0.748	ΣSAR<1.6, Not required
			Top side	0	1.19	0.4 (estimated SAR)	1.59	ΣSAR<1.6, Not required
			Top side	23	0.269	0.4 (estimated SAR)	Less than 0.669	ΣSAR<1.6, Not required
			Left side	0	0.092	0.172 (estimated SAR)	0.264	ΣSAR<1.6, Not required
			Left side	5	0.311	0.172 (estimated SAR)	Less than 0.483	ΣSAR<1.6, Not required
			Bottom side	0	0.4 (estimated SAR)	0.253	0.653	ΣSAR<1.6, Not required

WCDMA Band V + 2.4GHz WLAN

No.	Conditions	Exposure Condition	Position	Distance (mm)	Max. WCDMA B5	Max. WLAN	SAR Summation	SPLSR Analysis
5	WCDMA B5 + 2.4GHz WLAN	Body	Back side	0	0.758	0.579	1.337	ΣSAR<1.6, Not required
			Back side	19	0.195	Less than 0.579	Less than 0.774	ΣSAR<1.6, Not required
			Top side	0	0.67	0.4 (estimated SAR)	1.07	ΣSAR<1.6, Not required
			Top side	23	0.155	0.4 (estimated SAR)	Less than 0.555	ΣSAR<1.6, Not required
			Left side	0	0.165	0.172 (estimated SAR)	0.337	ΣSAR<1.6, Not required
			Left side	5	0.141	0.172 (estimated SAR)	Less than 0.313	ΣSAR<1.6, Not required
			Bottom side	0	0.4 (estimated SAR)	0.253	0.653	ΣSAR<1.6, Not required

Unless otherwise stated the results shown in this test report refer only to the sample(s) tested and such sample(s) are retained for 90 days only.
除非另有說明，此報告結果僅對測試之樣品負責，同時此樣品僅保留90天。本報告未經本公司書面許可，不可部份複製。
This document is issued by the Company subject to its General Conditions of Service printed overleaf, available on request or accessible at www.sgs.com/terms_and_conditions.htm and, for electronic format documents, subject to Terms and Conditions for Electronic Documents at www.sgs.com/terms_e-document.htm. Attention is drawn to the limitation of liability, indemnification and jurisdiction issues defined therein. Any holder of this document is advised that information contained hereon reflects the Company's findings at the time of its intervention only and within the limits of Client's instructions, if any. The Company's sole responsibility is to its Client and this document does not exonerate parties to a transaction from exercising all their rights and obligations under the transaction documents. This document cannot be reproduced except in full, without prior written approval of the Company. Any unauthorized alteration, forgery or falsification of the content or appearance of this document is unlawful and offenders may be prosecuted to the fullest extent of the law.

GPRS 850 + BT

No.	Conditions	Exposure Condition	Position	Distance (mm)	Max. GPRS850	Max. BT	SAR Summation	SPLSR Analysis
6	GPRS850 + BT	Body	Back side	0	1.191	0.124 (estimated SAR)	1.315	ΣSAR<1.6, Not required
			Back side	19	0.163	0.124 (estimated SAR)	Less than 0.287	ΣSAR<1.6, Not required
			Top side	0	0.845	0.4 (estimated SAR)	1.245	ΣSAR<1.6, Not required
			Top side	23	0.104	0.4 (estimated SAR)	Less than 0.504	ΣSAR<1.6, Not required
			Left side	0	0.437	0.013 (estimated SAR)	0.45	ΣSAR<1.6, Not required
			Left side	5	0.111	0.013 (estimated SAR)	Less than 0.124	ΣSAR<1.6, Not required
			Bottom side	0	0.4 (estimated SAR)	0.124 (estimated SAR)	0.524	ΣSAR<1.6, Not required

GPRS 1900 + BT

No.	Conditions	Exposure Condition	Position	Distance (mm)	Max. GPRS1900	Max. BT	SAR Summation	SPLSR Analysis
7	GPRS1900 + BT	Body	Back side	0	0.61	0.124 (estimated SAR)	0.734	ΣSAR<1.6, Not required
			Back side	19	0.169	0.124 (estimated SAR)	Less than 0.293	ΣSAR<1.6, Not required
			Top side	0	0.937	0.4 (estimated SAR)	1.337	ΣSAR<1.6, Not required
			Top side	23	0.056	0.4 (estimated SAR)	Less than 0.456	ΣSAR<1.6, Not required
			Left side	0	0.691	0.013 (estimated SAR)	0.704	ΣSAR<1.6, Not required
			Left side	5	0.163	0.013 (estimated SAR)	Less than 0.176	ΣSAR<1.6, Not required
			Bottom side	0	0.4 (estimated SAR)	0.124 (estimated SAR)	0.524	ΣSAR<1.6, Not required

Unless otherwise stated the results shown in this test report refer only to the sample(s) tested and such sample(s) are retained for 90 days only.
除非另有說明，此報告結果僅對測試之樣品負責，同時此樣品僅保留90天。本報告未經本公司書面許可，不可部份複製。
This document is issued by the Company subject to its General Conditions of Service printed overleaf, available on request or accessible at www.sgs.com/terms_and_conditions.htm and, for electronic format documents, subject to Terms and Conditions for Electronic Documents at www.sgs.com/terms_e-document.htm. Attention is drawn to the limitation of liability, indemnification and jurisdiction issues defined therein. Any holder of this document is advised that information contained hereon reflects the Company's findings at the time of its intervention only and within the limits of Client's instructions, if any. The Company's sole responsibility is to its Client and this document does not exonerate parties to a transaction from exercising all their rights and obligations under the transaction documents. This document cannot be reproduced except in full, without prior written approval of the Company. Any unauthorized alteration, forgery or falsification of the content or appearance of this document is unlawful and offenders may be prosecuted to the fullest extent of the law.

WCDMA Band II + BT

No.	Conditions	Exposure Condition	Position	Distance (mm)	Max. WCDMA B2	Max. BT	SAR Summation	SPLSR Analysis
8	WCDMA B2 + BT	Body	Back side	0	0.798	0.124 (estimated SAR)	0.922	ΣSAR<1.6, Not required
			Back side	19	0.198	0.124 (estimated SAR)	Less than 0.322	ΣSAR<1.6, Not required
			Top side	0	1.189	0.4 (estimated SAR)	1.589	ΣSAR<1.6, Not required
			Top side	23	0.376	0.4 (estimated SAR)	Less than 0.776	ΣSAR<1.6, Not required
			Left side	0	0.162	0.013 (estimated SAR)	0.175	ΣSAR<1.6, Not required
			Left side	5	0.339	0.013 (estimated SAR)	Less than 0.352	ΣSAR<1.6, Not required
			Bottom side	0	0.4 (estimated SAR)	0.124 (estimated SAR)	0.524	ΣSAR<1.6, Not required

WCDMA Band IV + BT

No.	Conditions	Exposure Condition	Position	Distance (mm)	Max. WCDMA B4	Max. BT	SAR Summation	SPLSR Analysis
9	WCDMA B4 + BT	Body	Back side	0	0.387	0.124 (estimated SAR)	0.511	ΣSAR<1.6, Not required
			Back side	19	0.169	0.124 (estimated SAR)	Less than 0.293	ΣSAR<1.6, Not required
			Top side	0	1.19	0.4 (estimated SAR)	1.59	ΣSAR<1.6, Not required
			Top side	23	0.269	0.4 (estimated SAR)	Less than 0.669	ΣSAR<1.6, Not required
			Left side	0	0.092	0.013 (estimated SAR)	0.105	ΣSAR<1.6, Not required
			Left side	5	0.311	0.013 (estimated SAR)	Less than 0.324	ΣSAR<1.6, Not required
			Bottom side	0	0.4 (estimated SAR)	0.124 (estimated SAR)	0.524	ΣSAR<1.6, Not required

Unless otherwise stated the results shown in this test report refer only to the sample(s) tested and such sample(s) are retained for 90 days only.
除非另有說明，此報告結果僅對測試之樣品負責，同時此樣品僅保留90天。本報告未經本公司書面許可，不可部份複製。
This document is issued by the Company subject to its General Conditions of Service printed overleaf, available on request or accessible at www.sgs.com/terms_and_conditions.htm and, for electronic format documents, subject to Terms and Conditions for Electronic Documents at www.sgs.com/terms_e-document.htm. Attention is drawn to the limitation of liability, indemnification and jurisdiction issues defined therein. Any holder of this document is advised that information contained hereon reflects the Company's findings at the time of its intervention only and within the limits of Client's instructions, if any. The Company's sole responsibility is to its Client and this document does not exonerate parties to a transaction from exercising all their rights and obligations under the transaction documents. This document cannot be reproduced except in full, without prior written approval of the Company. Any unauthorized alteration, forgery or falsification of the content or appearance of this document is unlawful and offenders may be prosecuted to the fullest extent of the law.

WCDMA Band V + BT

No.	Conditions	Exposure Condition	Position	Distance (mm)	Max. WCDMA B5	Max. BT	SAR Summation	SPLSR Analysis
10	WCDMA B5 + BT	Body	Back side	0	0.758	0.124 (estimated SAR)	0.882	ΣSAR<1.6, Not required
			Back side	19	0.195	0.124 (estimated SAR)	Less than 0.319	ΣSAR<1.6, Not required
			Top side	0	0.67	0.4 (estimated SAR)	1.07	ΣSAR<1.6, Not required
			Top side	23	0.155	0.4 (estimated SAR)	Less than 0.555	ΣSAR<1.6, Not required
			Left side	0	0.165	0.013 (estimated SAR)	0.178	ΣSAR<1.6, Not required
			Left side	5	0.141	0.013 (estimated SAR)	Less than 0.154	ΣSAR<1.6, Not required
			Bottom side	0	0.4 (estimated SAR)	0.124 (estimated SAR)	0.524	ΣSAR<1.6, Not required

Unless otherwise stated the results shown in this test report refer only to the sample(s) tested and such sample(s) are retained for 90 days only.
除非另有說明，此報告結果僅對測試之樣品負責，同時此樣品僅保留90天。本報告未經本公司書面許可，不可部份複製。
This document is issued by the Company subject to its General Conditions of Service printed overleaf, available on request or accessible at www.sgs.com/terms_and_conditions.htm and, for electronic format documents, subject to Terms and Conditions for Electronic Documents at www.sgs.com/terms_e-document.htm. Attention is drawn to the limitation of liability, indemnification and jurisdiction issues defined therein. Any holder of this document is advised that information contained hereon reflects the Company's findings at the time of its intervention only and within the limits of Client's instructions, if any. The Company's sole responsibility is to its Client and this document does not exonerate parties to a transaction from exercising all their rights and obligations under the transaction documents. This document cannot be reproduced except in full, without prior written approval of the Company. Any unauthorized alteration, forgery or falsification of the content or appearance of this document is unlawful and offenders may be prosecuted to the fullest extent of the law.
SGS Taiwan Ltd. 台灣檢驗科技股份有限公司
No.134,Wu Kung Road, New Taipei Industrial Park, Wuku District, New Taipei City, Taiwan 24803/新北市五股區新北產業園區五工路 134 號
t (886-2) 2299-3279 f (886-2) 2298-0488 www.tw.sgs.com
Member of SGS Group

4. Instruments List

Manufacturer	Device	Type	Serial number	Date of last calibration	Date of next calibration
Schmid & Partner Engineering AG	Dosimetric E-Field Probe	EX3DV4	3848	Apr.24,2014	Apr.23,2015
Schmid & Partner Engineering AG	System Validation Dipole	D835V2	4d063	Aug.28,2014	Aug.27,2015
		D1750V2	1008	Aug.28,2014	Aug.27,2015
		D1900V2	5d027	Apr.23,2014	Apr.22,2015
		D2450V2	922	Nov.05,2013	Nov.04,2014
Schmid & Partner Engineering AG	Data acquisition Electronics	DAE4	915	Jun.18,2014	Jun.17,2015
Schmid & Partner Engineering AG	Software	DASY 52 V52.8.8	N/A	Calibration not required	Calibration not required
Schmid & Partner Engineering AG	Phantom	SAM	N/A	Calibration not required	Calibration not required
Agilent	Network Analyzer	E5071C	MY46107530	Feb.14,2014	Feb.13,2015
Agilent	Dielectric Probe Kit	85070E	MY44300677	Calibration not required	Calibration not required
Agilent	Dual-directional coupler	772D	MY46151242	Jul.14,2014	Jul.13,2015
		778D	MY48220468	Apr.01,2014	Mar.31,2015
Agilent	RF Signal Generator	N5181A	MY50144143	Jun.25.2014	Jun.24.2015
Agilent	Power Meter	E4417A	MY51410006	Oct.25,2013	Oct.24,2015
Agilent	Power Sensor	E9301H	MY51470001	Dec.16,2013	Dec.15,2014
TECPEL	Digital thermometer	DTM-303A	TP130077	Mar.17,2014	Mar.16,2015

Unless otherwise stated the results shown in this test report refer only to the sample(s) tested and such sample(s) are retained for 90 days only.
除非另有說明，此報告結果僅對測試之樣品負責，同時此樣品僅保留90天。本報告未經本公司書面許可，不可部份複製。
This document is issued by the Company subject to its General Conditions of Service printed overleaf, available on request or accessible at www.sgs.com/terms_and_conditions.htm and, for electronic format documents, subject to Terms and Conditions for Electronic Documents at www.sgs.com/terms_e-document.htm. Attention is drawn to the limitation of liability, indemnification and jurisdiction issues defined therein. Any holder of this document is advised that information contained hereon reflects the Company's findings at the time of its intervention only and within the limits of Client's instructions, if any. The Company's sole responsibility is to its Client and this document does not exonerate parties to a transaction from exercising all their rights and obligations under the transaction documents. This document cannot be reproduced except in full, without prior written approval of the Company. Any unauthorized alteration, forgery or falsification of the content or appearance of this document is unlawful and offenders may be prosecuted to the fullest extent of the law.

Manufacturer	Device	Type	Serial number	Date of last calibration	Date of next calibration
R&S	Radio Communication Test	CMU200	113505	May.08,2014	May.07,2015
Anritsu	Power Meter	ML2495A	1005007	Jan.13,2014	Jan.12,2015
Anritsu	Power Sensor	MA2411B	917032	Jan.13,2014	Jan.12,2015
Mini-Circuit	Attenuator	BW-S10W2+	002	Feb.27,2014	Feb.26,2015

Unless otherwise stated the results shown in this test report refer only to the sample(s) tested and such sample(s) are retained for 90 days only.
除非另有說明，此報告結果僅對測試之樣品負責，同時此樣品僅保留90天。本報告未經本公司書面許可，不可部份複製。

This document is issued by the Company subject to its General Conditions of Service printed overleaf, available on request or accessible at www.sgs.com/terms_and_conditions.htm and, for electronic format documents, subject to Terms and Conditions for Electronic Documents at www.sgs.com/terms_e-document.htm. Attention is drawn to the limitation of liability, indemnification and jurisdiction issues defined therein. Any holder of this document is advised that information contained hereon reflects the Company's findings at the time of its intervention only and within the limits of Client's instructions, if any. The Company's sole responsibility is to its Client and this document does not exonerate parties to a transaction from exercising all their rights and obligations under the transaction documents. This document cannot be reproduced except in full, without prior written approval of the Company. Any unauthorized alteration, forgery or falsification of the content or appearance of this document is unlawful and offenders may be prosecuted to the fullest extent of the law.

SGS Taiwan Ltd. 台灣檢驗科技股份有限公司
No.134,Wu Kung Road, New Taipei Industrial Park, Wuku District, New Taipei City, Taiwan 24803/新北市五股區新北產業園區五工路 134 號
t (886-2) 2299-3279 f (886-2) 2298-0488 www.tw.sgs.com
Member of SGS Group

5. Measurements

Date: 2014/9/30

GPRS 850_Body-worn_Back side_CH 251_repeat SAR test at the highest SAR measurement

Communication System: GPRS (1Dn2Up); Frequency: 848.8 MHz
Medium parameters used: f = 849 MHz; σ = 1.007 S/m; εr = 52.754; ρ = 1000 kg/m^3
Phantom section: Flat Section

DASY5 Configuration:

- Probe: EX3DV4 - SN3848; ConvF(9.29, 9.29, 9.29); Calibrated: 2014/4/24;
- Sensor-Surface: 2mm (Mechanical Surface Detection)
- Electronics: DAE4 Sn915; Calibrated: 2014/6/18
- Phantom: Body;
- DASY52 52.8.7(1137); SEMCAD X 14.6.10(7331)

Configuration/Body/Area Scan (111x61x1): Interpolated grid: dx=15mm, dy=15mm
Maximum value of SAR (interpolated) = 1.18 W/kg

Configuration/Body/Zoom Scan (5x5x7)/Cube 0: Measurement grid: dx=8mm, dy=8mm, dz=5mm
Reference Value = 1.723 V/m; Power Drift = 0.09 dB
Peak SAR (extrapolated) = 1.56 W/kg
SAR(1 g) = 0.883 W/kg; SAR(10 g) = 0.527 W/kg
Maximum value of SAR (measured) = 1.18 W/kg

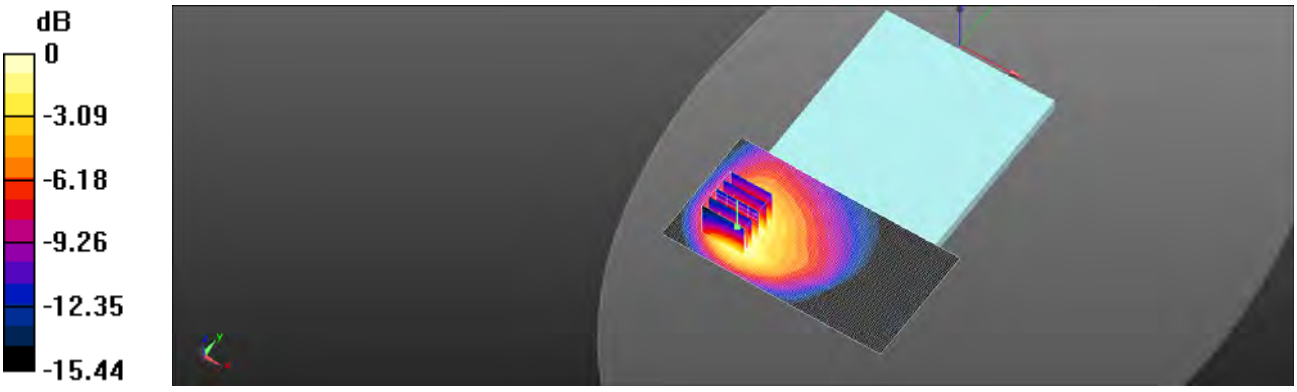

0 dB = 1.18 W/kg = 0.72 dBW/kg

Unless otherwise stated the results shown in this test report refer only to the sample(s) tested and such sample(s) are retained for 90 days only.
除非另有說明，此報告結果僅對測試之樣品負責，同時此樣品僅保留90天。本報告未經本公司書面許可，不可部份複製。
This document is issued by the Company subject to its General Conditions of Service printed overleaf, available on request or accessible at www.sgs.com/terms_and_conditions.htm and, for electronic format documents, subject to Terms and Conditions for Electronic Documents at www.sgs.com/terms_e-document.htm. Attention is drawn to the limitation of liability, indemnification and jurisdiction issues defined therein. Any holder of this document is advised that information contained hereon reflects the Company's findings at the time of its intervention only and within the limits of Client's instructions, if any. The Company's sole responsibility is to its Client and this document does not exonerate parties to a transaction from exercising all their rights and obligations under the transaction documents. This document cannot be reproduced except in full, without prior written approval of the Company. Any unauthorized alteration, forgery or falsification of the content or appearance of this document is unlawful and offenders may be prosecuted to the fullest extent of the law.

Date: 2014/10/1

GPRS 1900_Body-worn_Top side_CH 512

Communication System: GPRS (1Dn2Up); Frequency: 1850.2 MHz
Medium parameters used: f = 1850.2 MHz; σ = 1.452 S/m; ε_r = 52.276; ρ = 1000 kg/m^3
Phantom section: Flat Section

DASY5 Configuration:

- Probe: EX3DV4 - SN3848; ConvF(7.29, 7.29, 7.29); Calibrated: 2014/4/24;
- Sensor-Surface: 2mm (Mechanical Surface Detection)
- Electronics: DAE4 Sn915; Calibrated: 2014/6/18
- Phantom: Body;
- DASY52 52.8.8(1222); SEMCAD X 14.6.10(7331)

Configuration/Body/Area Scan (51x111x1): Interpolated grid: dx=15mm, dy=15mm
Maximum value of SAR (interpolated) = 1.03 W/kg

Configuration/Body/Zoom Scan (5x5x7)/Cube 0: Measurement grid: dx=8mm, dy=8mm, dz=5mm
Reference Value = 2.706 V/m; Power Drift = 0.16 dB
Peak SAR (extrapolated) = 1.38 W/kg
SAR(1 g) = 0.663 W/kg; SAR(10 g) = 0.286 W/kg
Maximum value of SAR (measured) = 1.02 W/kg

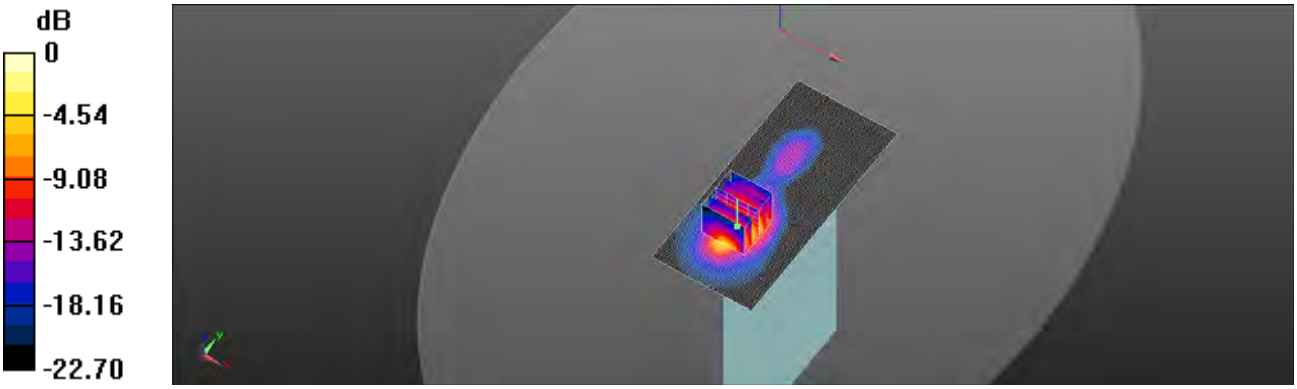

0 dB = 1.02 W/kg = 0.09 dBW/kg

Unless otherwise stated the results shown in this test report refer only to the sample(s) tested and such sample(s) are retained for 90 days only.
除非另有說明，此報告結果僅對測試之樣品負責，同時此樣品僅保留90天。本報告未經本公司書面許可，不可部份複製。
This document is issued by the Company subject to its General Conditions of Service printed overleaf, available on request or accessible at www.sgs.com/terms_and_conditions.htm and, for electronic format documents, subject to Terms and Conditions for Electronic Documents at www.sgs.com/terms_e-document.htm. Attention is drawn to the limitation of liability, indemnification and jurisdiction issues defined therein. Any holder of this document is advised that information contained hereon reflects the Company's findings at the time of its intervention only and within the limits of Client's instructions, if any. The Company's sole responsibility is to its Client and this document does not exonerate parties to a transaction from exercising all their rights and obligations under the transaction documents. This document cannot be reproduced except in full, without prior written approval of the Company. Any unauthorized alteration, forgery or falsification of the content or appearance of this document is unlawful and offenders may be prosecuted to the fullest extent of the law.

Date: 2014/10/1

GPRS 1900_Body-worn_Top side_CH 512_repeat SAR test at the highest SAR measurement

Communication System: GPRS (1Dn2Up); Frequency: 1850.2 MHz
Medium parameters used: f = 1850.2 MHz; σ = 1.452 S/m; ε_r = 52.276; ρ = 1000 kg/m^3
Phantom section: Flat Section

DASY5 Configuration:

- Probe: EX3DV4 - SN3848; ConvF(7.29, 7.29, 7.29); Calibrated: 2014/4/24;
- Sensor-Surface: 2mm (Mechanical Surface Detection)
- Electronics: DAE4 Sn915; Calibrated: 2014/6/18
- Phantom: Body;
- DASY52 52.8.8(1222); SEMCAD X 14.6.10(7331)

Configuration/Body/Area Scan (51x111x1): Interpolated grid: dx=15mm, dy=15mm
Maximum value of SAR (interpolated) = 1.01 W/kg

Configuration/Body/Zoom Scan (5x5x7)/Cube 0: Measurement grid: dx=8mm, dy=8mm, dz=5mm
Reference Value = 2.679 V/m; Power Drift = 0.18 dB
Peak SAR (extrapolated) = 1.37 W/kg
SAR(1 g) = 0.663 W/kg; SAR(10 g) = 0.285 W/kg
Maximum value of SAR (measured) = 1.01 W/kg

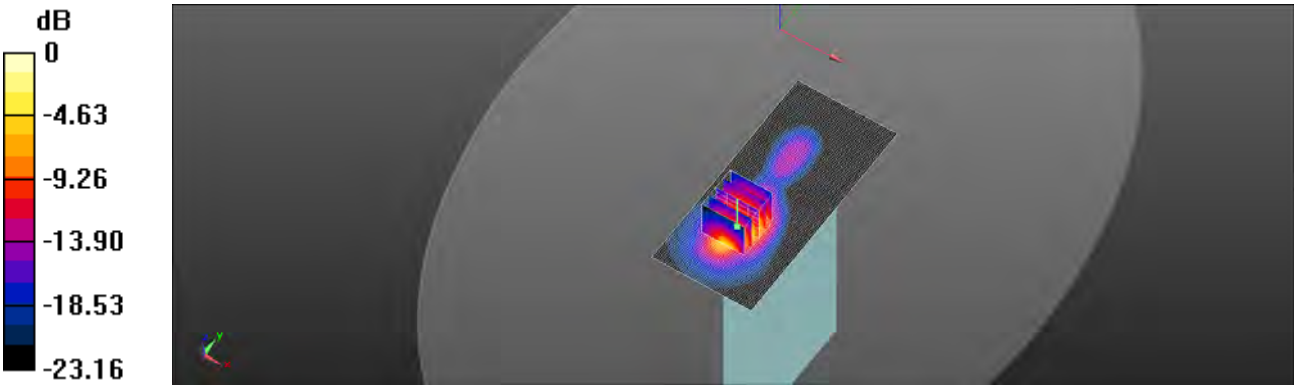

0 dB = 1.01 W/kg = 0.04 dBW/kg

Unless otherwise stated the results shown in this test report refer only to the sample(s) tested and such sample(s) are retained for 90 days only.
除非另有說明，此報告結果僅對測試之樣品負責，同時此樣品僅保留90天。本報告未經本公司書面許可，不可部份複製。
This document is issued by the Company subject to its General Conditions of Service printed overleaf, available on request or accessible at www.sgs.com/terms_and_conditions.htm and, for electronic format documents, subject to Terms and Conditions for Electronic Documents at www.sgs.com/terms_e-document.htm. Attention is drawn to the limitation of liability, indemnification and jurisdiction issues defined therein. Any holder of this document is advised that information contained hereon reflects the Company's findings at the time of its intervention only and within the limits of Client's instructions, if any. The Company's sole responsibility is to its Client and this document does not exonerate parties to a transaction from exercising all their rights and obligations under the transaction documents. This document cannot be reproduced except in full, without prior written approval of the Company. Any unauthorized alteration, forgery or falsification of the content or appearance of this document is unlawful and offenders may be prosecuted to the fullest extent of the law.

Date: 2014/10/1

WCDMA B2_Body-worn_Top side_CH 9262_repeat SAR test at the highest SAR measurement

Communication System: WCDMA; Frequency: 1852.4 MHz
Medium parameters used: f = 1852.4 MHz; σ = 1.454 S/m; ε_r = 52.265; ρ = 1000 kg/m^3
Phantom section: Flat Section

DASY5 Configuration:

- Probe: EX3DV4 - SN3848; ConvF(7.29, 7.29, 7.29); Calibrated: 2014/4/24;
- Sensor-Surface: 2mm (Mechanical Surface Detection)
- Electronics: DAE4 Sn915; Calibrated: 2014/6/18
- Phantom: Body;
- DASY52 52.8.8(1222); SEMCAD X 14.6.10(7331)

Configuration/Body/Area Scan (51x111x1): Interpolated grid: dx=15mm, dy=15mm
Maximum value of SAR (interpolated) = 1.42 W/kg

Configuration/Body/Zoom Scan (5x5x7)/Cube 0: Measurement grid: dx=8mm, dy=8mm, dz=5mm
Reference Value = 4.205 V/m; Power Drift = -0.19 dB
Peak SAR (extrapolated) = 2.39 W/kg
SAR(1 g) = 1.11 W/kg; SAR(10 g) = 0.478 W/kg
Maximum value of SAR (measured) = 1.47 W/kg

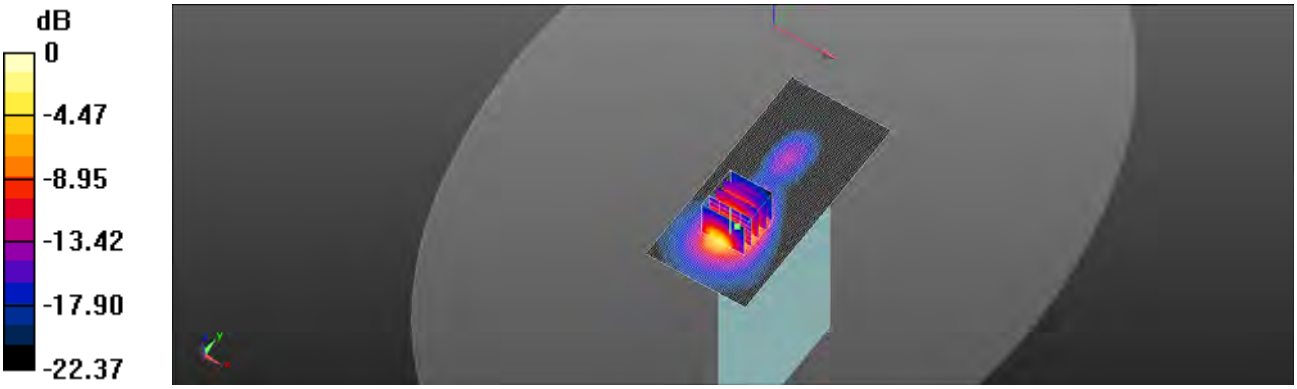

0 dB = 1.47 W/kg = 1.67 dBW/kg

Unless otherwise stated the results shown in this test report refer only to the sample(s) tested and such sample(s) are retained for 90 days only.
除非另有說明，此報告結果僅對測試之樣品負責，同時此樣品僅保留90天。本報告未經本公司書面許可，不可部份複製。
This document is issued by the Company subject to its General Conditions of Service printed overleaf, available on request or accessible at www.sgs.com/terms_and_conditions.htm and, for electronic format documents, subject to Terms and Conditions for Electronic Documents at www.sgs.com/terms_e-document.htm. Attention is drawn to the limitation of liability, indemnification and jurisdiction issues defined therein. Any holder of this document is advised that information contained hereon reflects the Company's findings at the time of its intervention only and within the limits of Client's instructions, if any. The Company's sole responsibility is to its Client and this document does not exonerate parties to a transaction from exercising all their rights and obligations under the transaction documents. This document cannot be reproduced except in full, without prior written approval of the Company. Any unauthorized alteration, forgery or falsification of the content or appearance of this document is unlawful and offenders may be prosecuted to the fullest extent of the law.

Date: 2014/9/30

WCDMA B4_Body-worn_Top side_CH 1412_repeat SAR test at the highest SAR measurement

Communication System: WCDMA; Frequency: 1732.4 MHz
Medium parameters used: f = 1732.4 MHz; σ = 1.448 S/m; ε_r = 54.47; ρ = 1000 kg/m^3
Phantom section: Flat Section

DASY5 Configuration:

- Probe: EX3DV4 - SN3848; ConvF(7.58, 7.58, 7.58); Calibrated: 2014/4/24;
- Sensor-Surface: 2mm (Mechanical Surface Detection)
- Electronics: DAE4 Sn915; Calibrated: 2014/6/18
- Phantom: Body;
- DASY52 52.8.8(1222); SEMCAD X 14.6.10(7331)

Configuration/Body/Area Scan (51x111x1): Interpolated grid: dx=15mm, dy=15mm
Maximum value of SAR (interpolated) = 1.57 W/kg

Configuration/Body/Zoom Scan (5x5x7)/Cube 0: Measurement grid: dx=8mm, dy=8mm, dz=5mm
Reference Value = 2.719 V/m; Power Drift = 0.17 dB
Peak SAR (extrapolated) = 1.90 W/kg
SAR(1 g) = 0.917 W/kg; SAR(10 g) = 0.403 W/kg
Maximum value of SAR (measured) = 1.44 W/kg

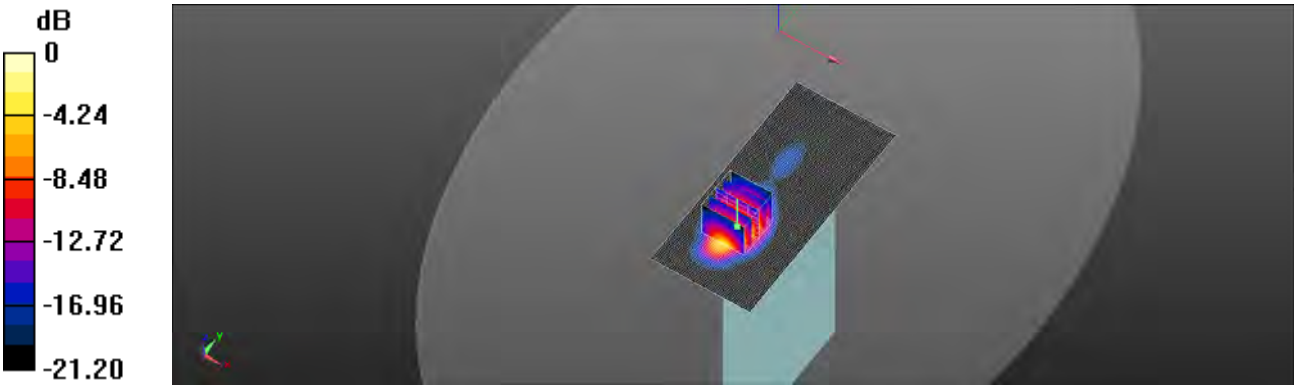

0 dB = 1.44 W/kg = 1.58 dBW/kg

Unless otherwise stated the results shown in this test report refer only to the sample(s) tested and such sample(s) are retained for 90 days only.
除非另有說明，此報告結果僅對測試之樣品負責，同時此樣品僅保留90天。本報告未經本公司書面許可，不可部份複製。
This document is issued by the Company subject to its General Conditions of Service printed overleaf, available on request or accessible at www.sgs.com/terms_and_conditions.htm and, for electronic format documents, subject to Terms and Conditions for Electronic Documents at www.sgs.com/terms_e-document.htm. Attention is drawn to the limitation of liability, indemnification and jurisdiction issues defined therein. Any holder of this document is advised that information contained hereon reflects the Company's findings at the time of its intervention only and within the limits of Client's instructions, if any. The Company's sole responsibility is to its Client and this document does not exonerate parties to a transaction from exercising all their rights and obligations under the transaction documents. This document cannot be reproduced except in full, without prior written approval of the Company. Any unauthorized alteration, forgery or falsification of the content or appearance of this document is unlawful and offenders may be prosecuted to the fullest extent of the law.

Date: 2014/9/30

WCDMA B5_Body-worn_Back side_CH 4132

Communication System: WCDMA; Frequency: 826.4 MHz
Medium parameters used: f = 826.4 MHz; σ = 0.983 S/m; εr = 52.951; ρ = 1000 kg/m^3
Phantom section: Flat Section

DASY5 Configuration:

- Probe: EX3DV4 - SN3848; ConvF(9.29, 9.29, 9.29); Calibrated: 2014/4/24;
- Sensor-Surface: 2mm (Mechanical Surface Detection)
- Electronics: DAE4 Sn915; Calibrated: 2014/6/18
- Phantom: Body;
- DASY52 52.8.7(1137); SEMCAD X 14.6.10(7331)

Configuration/Body/Area Scan (111x61x1): Interpolated grid: dx=15mm, dy=15mm
Maximum value of SAR (interpolated) = 0.930 W/kg

Configuration/Body/Zoom Scan (5x5x7)/Cube 0: Measurement grid: dx=8mm, dy=8mm, dz=5mm
Reference Value = 2.221 V/m; Power Drift = 0.17 dB
Peak SAR (extrapolated) = 1.23 W/kg
SAR(1 g) = 0.707 W/kg; SAR(10 g) = 0.429 W/kg
Maximum value of SAR (measured) = 0.958 W/kg

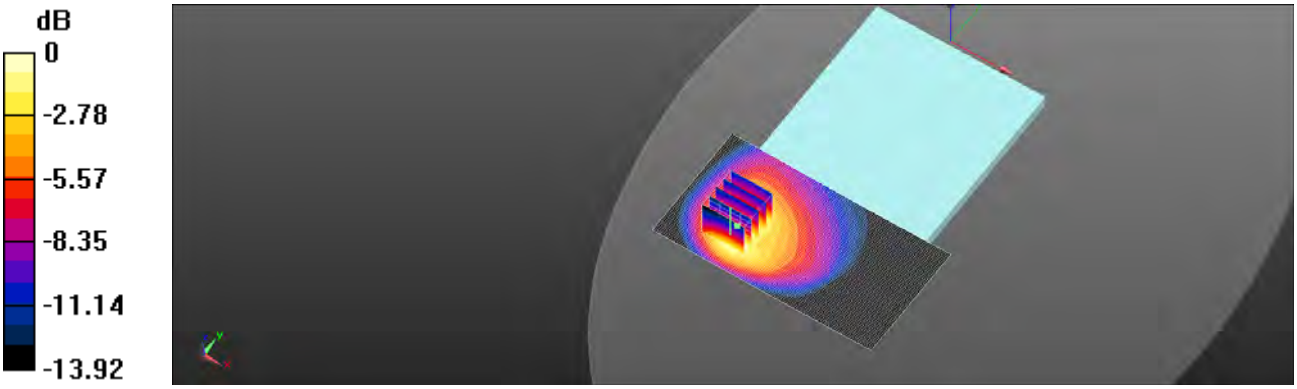

0 dB = 0.958 W/kg = -0.19 dBW/kg

Unless otherwise stated the results shown in this test report refer only to the sample(s) tested and such sample(s) are retained for 90 days only.
除非另有說明，此報告結果僅對測試之樣品負責，同時此樣品僅保留90天。本報告未經本公司書面許可，不可部份複製。
This document is issued by the Company subject to its General Conditions of Service printed overleaf, available on request or accessible at www.sgs.com/terms_and_conditions.htm and, for electronic format documents, subject to Terms and Conditions for Electronic Documents at www.sgs.com/terms_e-document.htm. Attention is drawn to the limitation of liability, indemnification and jurisdiction issues defined therein. Any holder of this document is advised that information contained hereon reflects the Company's findings at the time of its intervention only and within the limits of Client's instructions, if any. The Company's sole responsibility is to its Client and this document does not exonerate parties to a transaction from exercising all their rights and obligations under the transaction documents. This document cannot be reproduced except in full, without prior written approval of the Company. Any unauthorized alteration, forgery or falsification of the content or appearance of this document is unlawful and offenders may be prosecuted to the fullest extent of the law.

Date: 2014/9/29

WLAN802.11b_Body_Back side_CH 1

Communication System: WLAN 2.45G; Frequency: 2412 MHz
Medium parameters used: f = 2412 MHz; σ = 1.955 S/m; ε_r = 51.511; ρ = 1000 kg/m^3
Phantom section: Flat Section

DASY5 Configuration:

- Probe: EX3DV4 - SN3848; ConvF(6.93, 6.93, 6.93); Calibrated: 2014/4/24;
- Sensor-Surface: 2mm (Mechanical Surface Detection)
- Electronics: DAE4 Sn915; Calibrated: 2014/6/18
- Phantom: Body;
- DASY52 52.8.7(1137); SEMCAD X 14.6.10(7331)

Configuration/Body/Area Scan (131x61x1): Interpolated grid: dx=12mm, dy=12mm
Maximum value of SAR (interpolated) = 0.965 W/kg

Configuration/Body/Zoom Scan (7x7x7)/Cube 0: Measurement grid: dx=5mm, dy=5mm, dz=5mm
Reference Value = 2.240 V/m; Power Drift = 0.11 dB
Peak SAR (extrapolated) = 1.33 W/kg
SAR(1 g) = 0.575 W/kg; SAR(10 g) = 0.267 W/kg
Maximum value of SAR (measured) = 0.895 W/kg

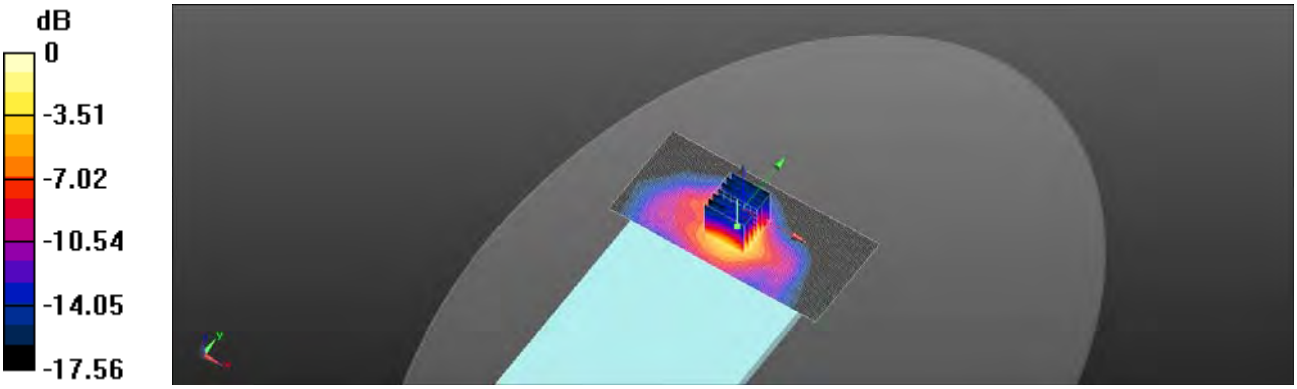

0 dB = 0.895 W/kg = -0.48 dBW/kg

Unless otherwise stated the results shown in this test report refer only to the sample(s) tested and such sample(s) are retained for 90 days only.
除非另有說明，此報告結果僅對測試之樣品負責，同時此樣品僅保留90天。本報告未經本公司書面許可，不可部份複製。
This document is issued by the Company subject to its General Conditions of Service printed overleaf, available on request or accessible at www.sgs.com/terms_and_conditions.htm and, for electronic format documents, subject to Terms and Conditions for Electronic Documents at www.sgs.com/terms_e-document.htm. Attention is drawn to the limitation of liability, indemnification and jurisdiction issues defined therein. Any holder of this document is advised that information contained hereon reflects the Company's findings at the time of its intervention only and within the limits of Client's instructions, if any. The Company's sole responsibility is to its Client and this document does not exonerate parties to a transaction from exercising all their rights and obligations under the transaction documents. This document cannot be reproduced except in full, without prior written approval of the Company. Any unauthorized alteration, forgery or falsification of the content or appearance of this document is unlawful and offenders may be prosecuted to the fullest extent of the law.

6. SAR System Performance Verification

Date: 2014/9/30

Dipole 835 MHz_SN:4d063_Body

Communication System: CW; Frequency: 835 MHz
Medium parameters used: f = 835 MHz; σ = 0.992 S/m; ε_r = 52.877; ρ = 1000 kg/m^3
Phantom section: Flat Section

DASY5 Configuration:

- Probe: EX3DV4 - SN3848; ConvF(9.29, 9.29, 9.29); Calibrated: 2014/4/24;
- Sensor-Surface: 2mm (Mechanical Surface Detection)
- Electronics: DAE4 Sn915; Calibrated: 2014/6/18
- Phantom: Body;
- DASY52 52.8.8(1222); SEMCAD X 14.6.10(7331)

Configuration/Pin=250mW/Area Scan (51x131x1): Interpolated grid: dx=15mm, dy=15mm
Maximum value of SAR (interpolated) = 3.12 W/kg

Configuration/Pin=250mW/Zoom Scan (7x7x7)/Cube 0: Measurement grid: dx=5mm, dy=5mm, dz=5mm
Reference Value = 55.70 V/m; Power Drift = 0.04 dB
Peak SAR (extrapolated) = 3.74 W/kg
SAR(1 g) = 2.44 W/kg; SAR(10 g) = 1.57 W/kg
Maximum value of SAR (measured) = 3.14 W/kg

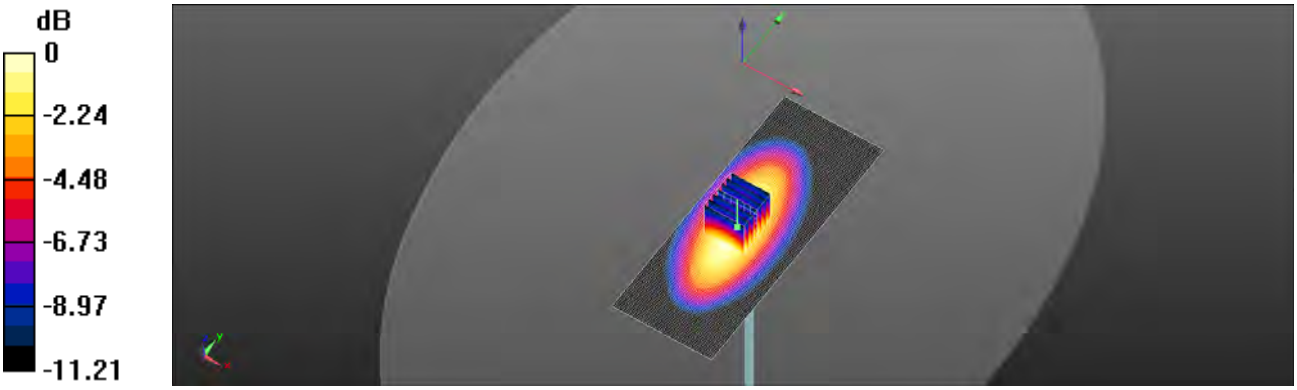

0 dB = 3.14 W/kg = 4.97 dBW/kg

Unless otherwise stated the results shown in this test report refer only to the sample(s) tested and such sample(s) are retained for 90 days only.
除非另有說明，此報告結果僅對測試之樣品負責，同時此樣品僅保留90天。本報告未經本公司書面許可，不可部份複製。
This document is issued by the Company subject to its General Conditions of Service printed overleaf, available on request or accessible at www.sgs.com/terms_and_conditions.htm and, for electronic format documents, subject to Terms and Conditions for Electronic Documents at www.sgs.com/terms_e-document.htm. Attention is drawn to the limitation of liability, indemnification and jurisdiction issues defined therein. Any holder of this document is advised that information contained hereon reflects the Company's findings at the time of its intervention only and within the limits of Client's instructions, if any. The Company's sole responsibility is to its Client and this document does not exonerate parties to a transaction from exercising all their rights and obligations under the transaction documents. This document cannot be reproduced except in full, without prior written approval of the Company. Any unauthorized alteration, forgery or falsification of the content or appearance of this document is unlawful and offenders may be prosecuted to the fullest extent of the law.

Date: 2014/9/30

Dipole 1750 MHz_SN:1008_Body

Communication System: CW; Frequency: 1750 MHz
Medium parameters used: f = 1750 MHz; σ = 1.46 S/m; ε_r = 54.4; ρ = 1000 kg/m^3
Phantom section: Flat Section

DASY5 Configuration:

- Probe: EX3DV4 - SN3848; ConvF(7.58, 7.58, 7.58); Calibrated: 2014/4/24;
- Sensor-Surface: 2mm (Mechanical Surface Detection)
- Electronics: DAE4 Sn915; Calibrated: 2014/6/18
- Phantom: Body;
- DASY52 52.8.8(1222); SEMCAD X 14.6.10(7331)

Configuration/Pin=250mW/Area Scan (51x61x1): Interpolated grid: dx=15mm, dy=15mm
Maximum value of SAR (interpolated) = 12.7 W/kg

Configuration/Pin=250mW/Zoom Scan (7x7x7)/Cube 0: Measurement grid: dx=5mm, dy=5mm, dz=5mm
Reference Value = 92.57 V/m; Power Drift = 0.02 dB
Peak SAR (extrapolated) = 15.8 W/kg
SAR(1 g) = 9.66 W/kg; SAR(10 g) = 5.12 W/kg
Maximum value of SAR (measured) = 12.3 W/kg

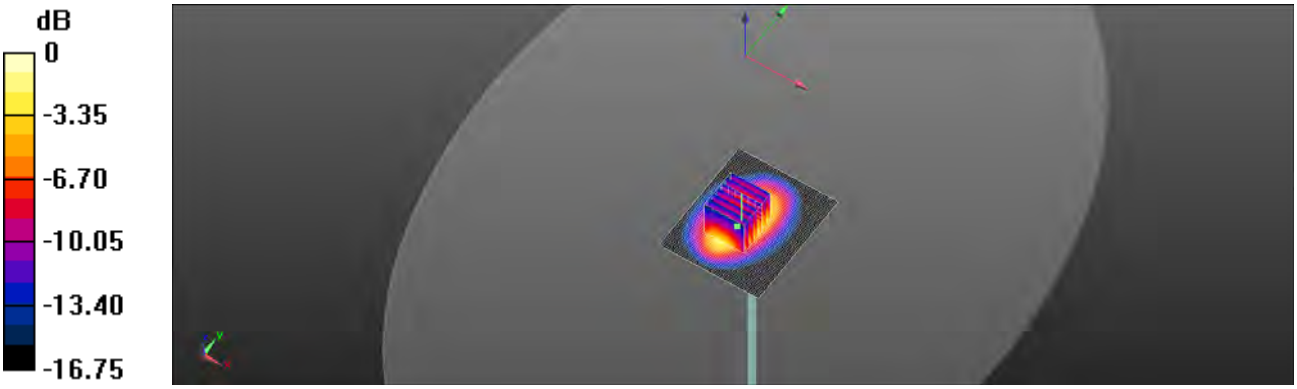

0 dB = 12.3 W/kg = 10.90 dBW/kg

Unless otherwise stated the results shown in this test report refer only to the sample(s) tested and such sample(s) are retained for 90 days only.
除非另有說明，此報告結果僅對測試之樣品負責，同時此樣品僅保留90天。本報告未經本公司書面許可，不可部份複製。
This document is issued by the Company subject to its General Conditions of Service printed overleaf, available on request or accessible at www.sgs.com/terms_and_conditions.htm and, for electronic format documents, subject to Terms and Conditions for Electronic Documents at www.sgs.com/terms_e-document.htm. Attention is drawn to the limitation of liability, indemnification and jurisdiction issues defined therein. Any holder of this document is advised that information contained hereon reflects the Company's findings at the time of its intervention only and within the limits of Client's instructions, if any. The Company's sole responsibility is to its Client and this document does not exonerate parties to a transaction from exercising all their rights and obligations under the transaction documents. This document cannot be reproduced except in full, without prior written approval of the Company. Any unauthorized alteration, forgery or falsification of the content or appearance of this document is unlawful and offenders may be prosecuted to the fullest extent of the law.

Date: 2014/10/1

Dipole 1900 MHz_SN:5d027_Body

Communication System: CW; Frequency: 1900 MHz
Medium parameters used: f = 1900 MHz; σ = 1.495 S/m; ε_r = 52.004; ρ = 1000 kg/m^3
Phantom section: Flat Section

DASY5 Configuration:

- Probe: EX3DV4 - SN3848; ConvF(7.29, 7.29, 7.29); Calibrated: 2014/4/24;
- Sensor-Surface: 2mm (Mechanical Surface Detection)
- Electronics: DAE4 Sn915; Calibrated: 2014/6/18
- Phantom: Body;
- DASY52 52.8.8(1222); SEMCAD X 14.6.10(7331)

Configuration/Pin=250mW/Area Scan (51x61x1): Interpolated grid: dx=15mm, dy=15mm
Maximum value of SAR (interpolated) = 16.8 W/kg

Configuration/Pin=250mW/Zoom Scan (7x7x7)/Cube 0: Measurement grid: dx=5mm, dy=5mm, dz=5mm
Reference Value = 104.5 V/m; Power Drift = 0.02 dB
Peak SAR (extrapolated) = 19.8 W/kg
SAR(1 g) = 10.2 W/kg; SAR(10 g) = 5.61 W/kg
Maximum value of SAR (measured) = 16.3 W/kg

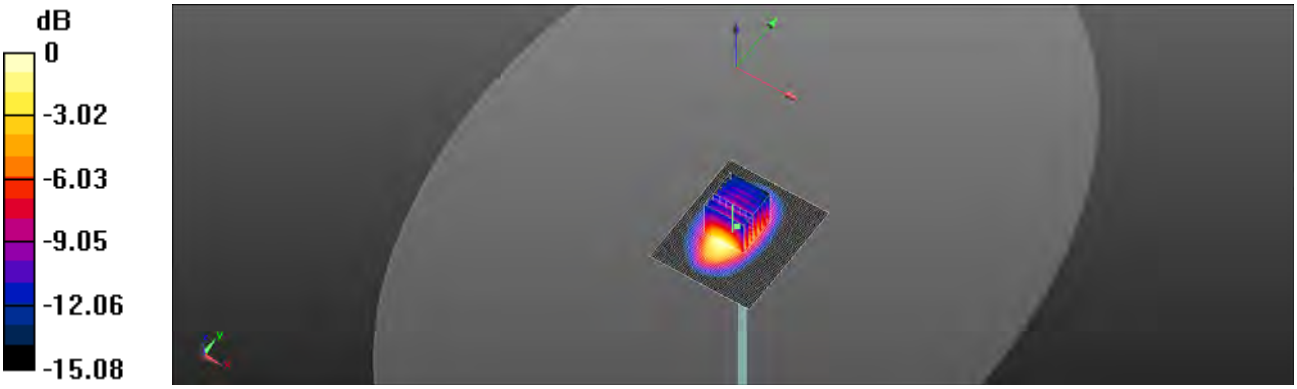

0 dB = 16.3 W/kg = 12.12 dBW/kg

Unless otherwise stated the results shown in this test report refer only to the sample(s) tested and such sample(s) are retained for 90 days only.
除非另有說明，此報告結果僅對測試之樣品負責，同時此樣品僅保留90天。本報告未經本公司書面許可，不可部份複製。
This document is issued by the Company subject to its General Conditions of Service printed overleaf, available on request or accessible at www.sgs.com/terms_and_conditions.htm and, for electronic format documents, subject to Terms and Conditions for Electronic Documents at www.sgs.com/terms_e-document.htm. Attention is drawn to the limitation of liability, indemnification and jurisdiction issues defined therein. Any holder of this document is advised that information contained hereon reflects the Company's findings at the time of its intervention only and within the limits of Client's instructions, if any. The Company's sole responsibility is to its Client and this document does not exonerate parties to a transaction from exercising all their rights and obligations under the transaction documents. This document cannot be reproduced except in full, without prior written approval of the Company. Any unauthorized alteration, forgery or falsification of the content or appearance of this document is unlawful and offenders may be prosecuted to the fullest extent of the law.

Date: 2014/9/29

Dipole 2450 MHz_SN 922_Body

Communication System: CW; Frequency: 2450 MHz
Medium parameters used: f = 2450 MHz; σ = 2.014 S/m; ε_r = 51.51; ρ = 1000 kg/m^3
Phantom section: Flat Section

DASY5 Configuration:

- Probe: EX3DV4 - SN3848; ConvF(6.93, 6.93, 6.93); Calibrated: 2014/4/24;
- Sensor-Surface: 2mm (Mechanical Surface Detection)
- Electronics: DAE4 Sn915; Calibrated: 2014/6/18
- Phantom: Body;
- DASY52 52.8.8(1222); SEMCAD X 14.6.10(7331)

Configuration/Pin=250mW/Area Scan (61x81x1): Interpolated grid: dx=12mm, dy=12mm
Maximum value of SAR (interpolated) = 24.3 W/kg

Configuration/Pin=250mW/Zoom Scan (7x7x7)/Cube 0: Measurement grid: dx=5mm, dy=5mm, dz=5mm
Reference Value = 92.9 V/m; Power Drift = 0.03 dB
Peak SAR (extrapolated) = 31.9 W/kg
SAR(1 g) = 12.9 W/kg; SAR(10 g) = 6.09 W/kg
Maximum value of SAR (measured) = 23.2 W/kg

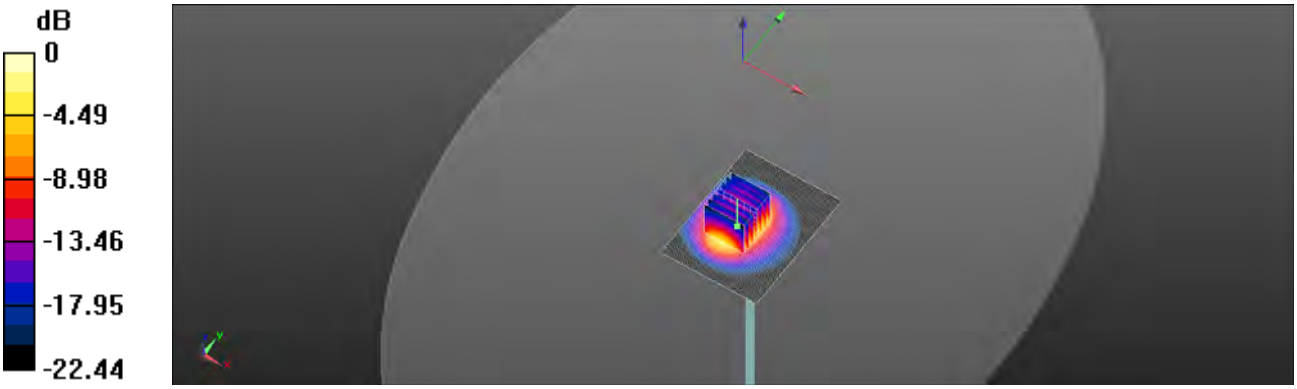

0 dB = 23.2 W/kg = 13.65 dBW/kg

Unless otherwise stated the results shown in this test report refer only to the sample(s) tested and such sample(s) are retained for 90 days only.
除非另有說明，此報告結果僅對測試之樣品負責，同時此樣品僅保留90天。本報告未經本公司書面許可，不可部份複製。
This document is issued by the Company subject to its General Conditions of Service printed overleaf, available on request or accessible at www.sgs.com/terms_and_conditions.htm and, for electronic format documents, subject to Terms and Conditions for Electronic Documents at www.sgs.com/terms_e-document.htm. Attention is drawn to the limitation of liability, indemnification and jurisdiction issues defined therein. Any holder of this document is advised that information contained hereon reflects the Company's findings at the time of its intervention only and within the limits of Client's instructions, if any. The Company's sole responsibility is to its Client and this document does not exonerate parties to a transaction from exercising all their rights and obligations under the transaction documents. This document cannot be reproduced except in full, without prior written approval of the Company. Any unauthorized alteration, forgery or falsification of the content or appearance of this document is unlawful and offenders may be prosecuted to the fullest extent of the law.

7. DAE & Probe Calibration Certificate

Calibration Laboratory of
Schmid & Partner
Engineering AG
Zeughausstrasse 43, 8004 Zurich, Switzerland

S Schweizerischer Kalibrierdienst
C Service suisse d'étalonnage
S Servizio svizzero di taratura
S Swiss Calibration Service

Accredited by the Swiss Accreditation Service (SAS)
The Swiss Accreditation Service is one of the signatories to the EA Multilateral Agreement for the recognition of calibration certificates

Accreditation No.: SCS 108

Client **Auden**

Certificate No: DAE4-915_Jun14

CALIBRATION CERTIFICATE

Object	DAE4 - SD 000 D04 BK - SN: 915
Calibration procedure(s)	QA CAL-06.v26 Calibration procedure for the data acquisition electronics (DAE)
Calibration date:	June 18, 2014

This calibration certificate documents the traceability to national standards, which realize the physical units of measurements (SI). The measurements and the uncertainties with confidence probability are given on the following pages and are part of the certificate.

All calibrations have been conducted in the closed laboratory facility: environment temperature (22 ± 3)°C and humidity < 70%.

Calibration Equipment used (M&TE critical for calibration)

Primary Standards	ID #	Cal Date (Certificate No.)	Scheduled Calibration
Keithley Multimeter Type 2001	SN: 0810278	01-Oct-13 (No:13976)	Oct-14
Secondary Standards	**ID #**	**Check Date (in house)**	**Scheduled Check**
Auto DAE Calibration Unit	SE UWS 053 AA 1001	07-Jan-14 (in house check)	In house check: Jan-15
Calibrator Box V2.1	SE UMS 006 AA 1002	07-Jan-14 (in house check)	In house check: Jan-15

	Name	Function	Signature
Calibrated by:	Dominique Steffen	Technician	
Approved by:	Fin Bomholt	Deputy Technical Manager	

Issued: June 18, 2014

This calibration certificate shall not be reproduced except in full without written approval of the laboratory.

Certificate No: DAE4-915_Jun14 Page 1 of 5

Unless otherwise stated the results shown in this test report refer only to the sample(s) tested and such sample(s) are retained for 90 days only.
除非另有說明，此報告結果僅對測試之樣品負責，同時此樣品僅保留90天。本報告未經本公司書面許可，不可部份複製。
This document is issued by the Company subject to its General Conditions of Service printed overleaf, available on request or accessible at www.sgs.com/terms_and_conditions.htm and, for electronic format documents, subject to Terms and Conditions for Electronic Documents at www.sgs.com/terms_e-document.htm. Attention is drawn to the limitation of liability, indemnification and jurisdiction issues defined therein. Any holder of this document is advised that information contained hereon reflects the Company's findings at the time of its intervention only and within the limits of Client's instructions, if any. The Company's sole responsibility is to its Client and this document does not exonerate parties to a transaction from exercising all their rights and obligations under the transaction documents. This document cannot be reproduced except in full, without prior written approval of the Company. Any unauthorized alteration, forgery or falsification of the content or appearance of this document is unlawful and offenders may be prosecuted to the fullest extent of the law.

Calibration Laboratory of
Schmid & Partner
Engineering AG
Zeughausstrasse 43, 8004 Zurich, Switzerland

S Schweizerischer Kalibrierdienst
C Service suisse d'étalonnage
S Servizio svizzero di taratura
Swiss Calibration Service

Accredited by the Swiss Accreditation Service (SAS)
The Swiss Accreditation Service is one of the signatories to the EA Multilateral Agreement for the recognition of calibration certificates

Accreditation No.: SCS 108

Glossary

DAE	data acquisition electronics
Connector angle	information used in DASY system to align probe sensor X to the robot coordinate system.

Methods Applied and Interpretation of Parameters

- *DC Voltage Measurement:* Calibration Factor assessed for use in DASY system by comparison with a calibrated instrument traceable to national standards. The figure given corresponds to the full scale range of the voltmeter in the respective range.
- *Connector angle*: The angle of the connector is assessed measuring the angle mechanically by a tool inserted. Uncertainty is not required.
- The following parameters as documented in the Appendix contain technical information as a result from the performance test and require no uncertainty.
  - *DC Voltage Measurement Linearity:* Verification of the Linearity at +10% and -10% of the nominal calibration voltage. Influence of offset voltage is included in this measurement.
  - *Common mode sensitivity:* Influence of a positive or negative common mode voltage on the differential measurement.
  - *Channel separation:* Influence of a voltage on the neighbor channels not subject to an input voltage.
  - *AD Converter Values with inputs shorted:* Values on the internal AD converter corresponding to zero input voltage
  - *Input Offset Measurement*: Output voltage and statistical results over a large number of zero voltage measurements.
  - *Input Offset Current:* Typical value for information; Maximum channel input offset current, not considering the input resistance.
  - *Input resistance:* Typical value for information: DAE input resistance at the connector, during internal auto-zeroing and during measurement.
  - *Low Battery Alarm Voltage:* Typical value for information. Below this voltage, a battery alarm signal is generated.
  - *Power consumption:* Typical value for information. Supply currents in various operating modes.

Unless otherwise stated the results shown in this test report refer only to the sample(s) tested and such sample(s) are retained for 90 days only.
除非另有說明，此報告結果僅對測試之樣品負責，同時此樣品僅保留90天。本報告未經本公司書面許可，不可部份複製。
This document is issued by the Company subject to its General Conditions of Service printed overleaf, available on request or accessible at www.sgs.com/terms_and_conditions.htm and, for electronic format documents, subject to Terms and Conditions for Electronic Documents at www.sgs.com/terms_e-document.htm. Attention is drawn to the limitation of liability, indemnification and jurisdiction issues defined therein. Any holder of this document is advised that information contained hereon reflects the Company's findings at the time of its intervention only and within the limits of Client's instructions, if any. The Company's sole responsibility is to its Client and this document does not exonerate parties to a transaction from exercising all their rights and obligations under the transaction documents. This document cannot be reproduced except in full, without prior written approval of the Company. Any unauthorized alteration, forgery or falsification of the content or appearance of this document is unlawful and offenders may be prosecuted to the fullest extent of the law.

DC Voltage Measurement

A/D - Converter Resolution nominal

High Range:	1LSB =	6.1μV ,	full range =	-100...+300 mV
Low Range:	1LSB =	61nV ,	full range =	-1.....+3mV

DASY measurement parameters: Auto Zero Time: 3 sec; Measuring time: 3 sec

Calibration Factors	X	Y	Z
High Range	404.307 ± 0.02% (k=2)	404.432 ± 0.02% (k=2)	404.778 ± 0.02% (k=2)
Low Range	3.97786 ± 1.50% (k=2)	4.00889 ± 1.50% (k=2)	3.98763 ± 1.50% (k=2)

Connector Angle

Connector Angle to be used in DASY system	115.0 ° ± 1 °

Unless otherwise stated the results shown in this test report refer only to the sample(s) tested and such sample(s) are retained for 90 days only.
除非另有說明，此報告結果僅對測試之樣品負責，同時此樣品僅保留90天。本報告未經本公司書面許可，不可部份複製。

This document is issued by the Company subject to its General Conditions of Service printed overleaf, available on request or accessible at www.sgs.com/terms_and_conditions.htm and, for electronic format documents, subject to Terms and Conditions for Electronic Documents at www.sgs.com/terms_e-document.htm. Attention is drawn to the limitation of liability, indemnification and jurisdiction issues defined therein. Any holder of this document is advised that information contained hereon reflects the Company's findings at the time of its intervention only and within the limits of Client's instructions, if any. The Company's sole responsibility is to its Client and this document does not exonerate parties to a transaction from exercising all their rights and obligations under the transaction documents. This document cannot be reproduced except in full, without prior written approval of the Company. Any unauthorized alteration, forgery or falsification of the content or appearance of this document is unlawful and offenders may be prosecuted to the fullest extent of the law.

SGS Taiwan Ltd. 台灣檢驗科技股份有限公司
No.134,Wu Kung Road, New Taipei Industrial Park, Wuku District, New Taipei City, Taiwan 24803/新北市五股區新北產業園區五工路 134 號
t (886-2) 2299-3279 f (886-2) 2298-0488 www.tw.sgs.com
Member of SGS Group

Appendix (Additional assessments outside the scope of SCS108)

1. DC Voltage Linearity

High Range		Reading (µV)	Difference (µV)	Error (%)
Channel X	+ Input	199998.08	1.14	0.00
Channel X	+ Input	20000.26	-0.79	-0.00
Channel X	- Input	-19999.34	1.47	-0.01
Channel Y	+ Input	200000.17	3.04	0.00
Channel Y	+ Input	19999.35	-1.60	-0.01
Channel Y	- Input	-20000.40	0.40	-0.00
Channel Z	+ Input	199996.89	-0.05	-0.00
Channel Z	+ Input	19999.67	-1.07	-0.01
Channel Z	- Input	-20001.83	-0.82	0.00

Low Range		Reading (µV)	Difference (µV)	Error (%)
Channel X	+ Input	2000.78	-0.15	-0.01
Channel X	+ Input	201.37	-0.01	-0.00
Channel X	- Input	-198.71	-0.07	0.04
Channel Y	+ Input	2001.08	0.23	0.01
Channel Y	+ Input	201.11	-0.04	-0.02
Channel Y	- Input	-198.95	-0.16	0.08
Channel Z	+ Input	2000.69	-0.17	-0.01
Channel Z	+ Input	200.66	-0.48	-0.24
Channel Z	- Input	-200.04	-1.33	0.67

2. Common mode sensitivity

DASY measurement parameters: Auto Zero Time: 3 sec; Measuring time: 3 sec

	Common mode Input Voltage (mV)	High Range Average Reading (µV)	Low Range Average Reading (µV)
Channel X	200	-15.73	-17.62
	- 200	17.95	16.40
Channel Y	200	-5.63	-5.61
	- 200	4.75	4.70
Channel Z	200	-0.98	-1.03
	- 200	-0.88	-0.86

3. Channel separation

DASY measurement parameters: Auto Zero Time: 3 sec; Measuring time: 3 sec

	Input Voltage (mV)	Channel X (µV)	Channel Y (µV)	Channel Z (µV)
Channel X	200	-	4.09	-3.56
Channel Y	200	7.89	-	5.02
Channel Z	200	8.61	6.69	-

Unless otherwise stated the results shown in this test report refer only to the sample(s) tested and such sample(s) are retained for 90 days only.
除非另有說明，此報告結果僅對測試之樣品負責，同時此樣品僅保留90天。本報告未經本公司書面許可，不可部份複製。
This document is issued by the Company subject to its General Conditions of Service printed overleaf, available on request or accessible at www.sgs.com/terms_and_conditions.htm and, for electronic format documents, subject to Terms and Conditions for Electronic Documents at www.sgs.com/terms_e-document.htm. Attention is drawn to the limitation of liability, indemnification and jurisdiction issues defined therein. Any holder of this document is advised that information contained hereon reflects the Company's findings at the time of its intervention only and within the limits of Client's instructions, if any. The Company's sole responsibility is to its Client and this document does not exonerate parties to a transaction from exercising all their rights and obligations under the transaction documents. This document cannot be reproduced except in full, without prior written approval of the Company. Any unauthorized alteration, forgery or falsification of the content or appearance of this document is unlawful and offenders may be prosecuted to the fullest extent of the law.

SGS Taiwan Ltd. 台灣檢驗科技股份有限公司
No.134,Wu Kung Road, New Taipei Industrial Park, Wuku District, New Taipei City, Taiwan 24803/新北市五股區新北產業園區五工路 134 號
t (886-2) 2299-3279 f (886-2) 2298-0488 www.tw.sgs.com
Member of SGS Group

4. AD-Converter Values with inputs shorted

DASY measurement parameters: Auto Zero Time: 3 sec; Measuring time: 3 sec

	High Range (LSB)	Low Range (LSB)
Channel X	16112	13093
Channel Y	15985	14777
Channel Z	15881	15729

5. Input Offset Measurement

DASY measurement parameters: Auto Zero Time: 3 sec; Measuring time: 3 sec
Input 10MΩ

	Average (µV)	min. Offset (µV)	max. Offset (µV)	Std. Deviation (µV)
Channel X	0.08	-1.17	1.32	0.43
Channel Y	-0.58	-1.57	0.70	0.47
Channel Z	-0.51	-1.47	1.80	0.44

6. Input Offset Current

Nominal Input circuitry offset current on all channels: <25fA

7. Input Resistance (Typical values for information)

	Zeroing (kOhm)	Measuring (MOhm)
Channel X	200	200
Channel Y	200	200
Channel Z	200	200

8. Low Battery Alarm Voltage (Typical values for information)

Typical values	Alarm Level (VDC)
Supply (+ Vcc)	+7.9
Supply (- Vcc)	-7.6

9. Power Consumption (Typical values for information)

Typical values	Switched off (mA)	Stand by (mA)	Transmitting (mA)
Supply (+ Vcc)	+0.01	+6	+14
Supply (- Vcc)	-0.01	-8	-9

Unless otherwise stated the results shown in this test report refer only to the sample(s) tested and such sample(s) are retained for 90 days only.
除非另有說明，此報告結果僅對測試之樣品負責，同時此樣品僅保留90天。本報告未經本公司書面許可，不可部份複製。
This document is issued by the Company subject to its General Conditions of Service printed overleaf, available on request or accessible at www.sgs.com/terms_and_conditions.htm and, for electronic format documents, subject to Terms and Conditions for Electronic Documents at www.sgs.com/terms_e-document.htm. Attention is drawn to the limitation of liability, indemnification and jurisdiction issues defined therein. Any holder of this document is advised that information contained hereon reflects the Company's findings at the time of its intervention only and within the limits of Client's instructions, if any. The Company's sole responsibility is to its Client and this document does not exonerate parties to a transaction from exercising all their rights and obligations under the transaction documents. This document cannot be reproduced except in full, without prior written approval of the Company. Any unauthorized alteration, forgery or falsification of the content or appearance of this document is unlawful and offenders may be prosecuted to the fullest extent of the law.
SGS Taiwan Ltd. 台灣檢驗科技股份有限公司
No.134,Wu Kung Road, New Taipei Industrial Park, Wuku District, New Taipei City, Taiwan 24803/新北市五股區新北產業園區五工路 134 號
t (886-2) 2299-3279 f (886-2) 2298-0488 www.tw.sgs.com
Member of SGS Group

Calibration Laboratory of
Schmid & Partner
Engineering AG
Zeughausstrasse 43, 8004 Zurich, Switzerland

S Schweizerischer Kalibrierdienst
C Service suisse d'étalonnage
S Servizio svizzero di taratura
Swiss Calibration Service

Accredited by the Swiss Accreditation Service (SAS)
The Swiss Accreditation Service is one of the signatories to the EA Multilateral Agreement for the recognition of calibration certificates

Accreditation No.: SCS 108

Client SGS-TW (Auden)

Certificate No: EX3-3848_Apr14

CALIBRATION CERTIFICATE

Object: EX3DV4 - SN:3848

Calibration procedure(s): QA CAL-01.v9, QA CAL-14.v4, QA CAL-23.v5, QA CAL-25.v6
Calibration procedure for dosimetric E-field probes

Calibration date: April 24, 2014

This calibration certificate documents the traceability to national standards, which realize the physical units of measurements (SI).
The measurements and the uncertainties with confidence probability are given on the following pages and are part of the certificate.

All calibrations have been conducted in the closed laboratory facility: environment temperature (22 ± 3)°C and humidity < 70%.

Calibration Equipment used (M&TE critical for calibration)

Primary Standards	ID	Cal Date (Certificate No.)	Scheduled Calibration
Power meter E4419B	GB41293874	03-Apr-14 (No. 217-01911)	Apr-15
Power sensor E4412A	MY41498087	03-Apr-14 (No. 217-01911)	Apr-15
Reference 3 dB Attenuator	SN: S5054 (3c)	03-Apr-14 (No. 217-01915)	Apr-15
Reference 20 dB Attenuator	SN: S5277 (20a)	03-Apr-14 (No. 217-01919)	Apr-15
Reference 30 dB Attenuator	SN: S5129 (30b)	03-Apr-14 (No. 217-01920)	Apr-15
Reference Probe ES3DV2	SN: 3013	30-Dec-13 (No. ES3-3013_Dec13)	Dec-14
DAE4	SN: 860	13-Dec-13 (No. DAE4-860_Dec13)	Dec-14
Secondary Standards	ID	Check Date (in house)	Scheduled Check
RF generator HP 8848C	US3642U01700	4-Aug-99 (in house check Apr-13)	In house check: Apr-16
Network Analyzer HP 8753E	US37390585	18-Oct-01 (in house check Oct-13)	In house check: Oct-14

	Name	Function	Signature
Calibrated by:	Jelon Gastrah	Laboratory Technician	
Approved by:	Katja Pokovic	Technical Manager	

Issued: April 24, 2014

This calibration certificate shall not be reproduced except in full without written approval of the laboratory.

Certificate No: EX3-3848_Apr14 Page 1 of 11

Unless otherwise stated the results shown in this test report refer only to the sample(s) tested and such sample(s) are retained for 90 days only.
除非另有說明，此報告結果僅對測試之樣品負責，同時此樣品僅保留90天。本報告未經本公司書面許可，不可部份複製。
This document is issued by the Company subject to its General Conditions of Service printed overleaf, available on request or accessible at www.sgs.com/terms_and_conditions.htm and, for electronic format documents, subject to Terms and Conditions for Electronic Documents at www.sgs.com/terms_e-document.htm. Attention is drawn to the limitation of liability, indemnification and jurisdiction issues defined therein. Any holder of this document is advised that information contained hereon reflects the Company's findings at the time of its intervention only and within the limits of Client's instructions, if any. The Company's sole responsibility is to its Client and this document does not exonerate parties to a transaction from exercising all their rights and obligations under the transaction documents. This document cannot be reproduced except in full, without prior written approval of the Company. Any unauthorized alteration, forgery or falsification of the content or appearance of this document is unlawful and offenders may be prosecuted to the fullest extent of the law.

Calibration Laboratory of
Schmid & Partner
Engineering AG
Zeughausstrasse 43, 8004 Zurich, Switzerland

S Schweizerischer Kalibrierdienst
C Service suisse d'étalonnage
S Servizio svizzero di taratura
Swiss Calibration Service

Accredited by the Swiss Accreditation Service (SAS)
The Swiss Accreditation Service is one of the signatories to the EA Multilateral Agreement for the recognition of calibration certificates

Accreditation No.: **SCS 108**

Glossary:

TSL	tissue simulating liquid
NORMx,y,z	sensitivity in free space
ConvF	sensitivity in TSL / NORMx,y,z
DCP	diode compression point
CF	crest factor (1/duty_cycle) of the RF signal
A, B, C, D	modulation dependent linearization parameters
Polarization φ	φ rotation around probe axis
Polarization ϑ	ϑ rotation around an axis that is in the plane normal to probe axis (at measurement center), i.e., ϑ = 0 is normal to probe axis
Connector Angle	information used in DASY system to align probe sensor X to the robot coordinate system

Calibration is Performed According to the Following Standards:

a) IEEE Std 1528-2013, "IEEE Recommended Practice for Determining the Peak Spatial-Averaged Specific Absorption Rate (SAR) in the Human Head from Wireless Communications Devices: Measurement Techniques", June 2013
b) IEC 62209-1, "Procedure to measure the Specific Absorption Rate (SAR) for hand-held devices used in close proximity to the ear (frequency range of 300 MHz to 3 GHz)", February 2005

Methods Applied and Interpretation of Parameters:

- *NORMx,y,z:* Assessed for E-field polarization ϑ = 0 (f ≤ 900 MHz in TEM-cell; f > 1800 MHz: R22 waveguide). NORMx,y,z are only intermediate values, i.e., the uncertainties of NORMx,y,z does not affect the E^2-field uncertainty inside TSL (see below *ConvF*).
- *NORM(f)x,y,z = NORMx,y,z * frequency_response* (see Frequency Response Chart). This linearization is implemented in DASY4 software versions later than 4.2. The uncertainty of the frequency response is included in the stated uncertainty of *ConvF*.
- *DCPx,y,z:* DCP are numerical linearization parameters assessed based on the data of power sweep with CW signal (no uncertainty required). DCP does not depend on frequency nor media.
- *PAR:* PAR is the Peak to Average Ratio that is not calibrated but determined based on the signal characteristics
- *Ax,y,z; Bx,y,z; Cx,y,z; Dx,y,z; VRx,y,z: A, B, C, D* are numerical linearization parameters assessed based on the data of power sweep for specific modulation signal. The parameters do not depend on frequency nor media. *VR* is the maximum calibration range expressed in RMS voltage across the diode.
- *ConvF and Boundary Effect Parameters:* Assessed in flat phantom using E-field (or Temperature Transfer Standard for f ≤ 800 MHz) and inside waveguide using analytical field distributions based on power measurements for f > 800 MHz. The same setups are used for assessment of the parameters applied for boundary compensation (alpha, depth) of which typical uncertainty values are given. These parameters are used in DASY4 software to improve probe accuracy close to the boundary. The sensitivity in TSL corresponds to *NORMx,y,z * ConvF* whereby the uncertainty corresponds to that given for *ConvF*. A frequency dependent *ConvF* is used in DASY version 4.4 and higher which allows extending the validity from ± 50 MHz to ± 100 MHz.
- *Spherical isotropy (3D deviation from isotropy):* in a field of low gradients realized using a flat phantom exposed by a patch antenna.
- *Sensor Offset:* The sensor offset corresponds to the offset of virtual measurement center from the probe tip (on probe axis). No tolerance required.
- *Connector Angle:* The angle is assessed using the information gained by determining the *NORMx* (no uncertainty required).

Unless otherwise stated the results shown in this test report refer only to the sample(s) tested and such sample(s) are retained for 90 days only.
除非另有說明，此報告結果僅對測試之樣品負責，同時此樣品僅保留90天。本報告未經本公司書面許可，不可部份複製。
This document is issued by the Company subject to its General Conditions of Service printed overleaf, available on request or accessible at www.sgs.com/terms_and_conditions.htm and, for electronic format documents, subject to Terms and Conditions for Electronic Documents at www.sgs.com/terms_e-document.htm. Attention is drawn to the limitation of liability, indemnification and jurisdiction issues defined therein. Any holder of this document is advised that information contained hereon reflects the Company's findings at the time of its intervention only and within the limits of Client's instructions, if any. The Company's sole responsibility is to its Client and this document does not exonerate parties to a transaction from exercising all their rights and obligations under the transaction documents. This document cannot be reproduced except in full, without prior written approval of the Company. Any unauthorized alteration, forgery or falsification of the content or appearance of this document is unlawful and offenders may be prosecuted to the fullest extent of the law.
SGS Taiwan Ltd. 台灣檢驗科技股份有限公司
No.134,Wu Kung Road, New Taipei Industrial Park, Wuku District, New Taipei City, Taiwan 24803/新北市五股區新北產業園區五工路134號
t (886-2) 2299-3279 f (886-2) 2298-0488 www.tw.sgs.com
Member of SGS Group

Probe EX3DV4

SN:3848

Manufactured: October 25, 2011
Calibrated: April 24, 2014

Calibrated for DASY/EASY Systems
(Note: non-compatible with DASY2 system!)

Unless otherwise stated the results shown in this test report refer only to the sample(s) tested and such sample(s) are retained for 90 days only.
除非另有說明，此報告結果僅對測試之樣品負責，同時此樣品僅保留90天。本報告未經本公司書面許可，不可部份複製。
This document is issued by the Company subject to its General Conditions of Service printed overleaf, available on request or accessible at www.sgs.com/terms_and_conditions.htm and, for electronic format documents, subject to Terms and Conditions for Electronic Documents at www.sgs.com/terms_e-document.htm. Attention is drawn to the limitation of liability, indemnification and jurisdiction issues defined therein. Any holder of this document is advised that information contained hereon reflects the Company's findings at the time of its intervention only and within the limits of Client's instructions, if any. The Company's sole responsibility is to its Client and this document does not exonerate parties to a transaction from exercising all their rights and obligations under the transaction documents. This document cannot be reproduced except in full, without prior written approval of the Company. Any unauthorized alteration, forgery or falsification of the content or appearance of this document is unlawful and offenders may be prosecuted to the fullest extent of the law.

SGS Taiwan Ltd. 台灣檢驗科技股份有限公司
No.134,Wu Kung Road, New Taipei Industrial Park, Wuku District, New Taipei City, Taiwan 24803/新北市五股區新北產業園區五工路 134 號
t (886-2) 2299-3279 f (886-2) 2298-0488 www.tw.sgs.com
Member of SGS Group

DASY/EASY - Parameters of Probe: EX3DV4 - SN:3848

Basic Calibration Parameters

	Sensor X	Sensor Y	Sensor Z	Unc (k=2)
Norm ($\mu V/(V/m)^2$)[A]	0.41	0.41	0.45	± 10.1 %
DCP (mV)[B]	98.6	97.4	97.6	

Modulation Calibration Parameters

UID	Communication System Name		A dB	B dB√µV	C	D dB	VR mV	Unc[E] (k=2)
0	CW	X	0.0	0.0	1.0	0.00	141.5	±3.0 %
		Y	0.0	0.0	1.0		143.4	
		Z	0.0	0.0	1.0		127.9	

The reported uncertainty of measurement is stated as the standard uncertainty of measurement multiplied by the coverage factor k=2, which for a normal distribution corresponds to a coverage probability of approximately 95%.

[A] The uncertainties of NormX,Y,Z do not affect the E^2-field uncertainty inside TSL (see Pages 5 and 6).
[B] Numerical linearization parameter: uncertainty not required.
[E] Uncertainty is determined using the max. deviation from linear response applying rectangular distribution and is expressed for the square of the field value.

Unless otherwise stated the results shown in this test report refer only to the sample(s) tested and such sample(s) are retained for 90 days only.
除非另有說明，此報告結果僅對測試之樣品負責，同時此樣品僅保留90天。本報告未經本公司書面許可，不可部份複製。
This document is issued by the Company subject to its General Conditions of Service printed overleaf, available on request or accessible at www.sgs.com/terms_and_conditions.htm and, for electronic format documents, subject to Terms and Conditions for Electronic Documents at www.sgs.com/terms_e-document.htm. Attention is drawn to the limitation of liability, indemnification and jurisdiction issues defined therein. Any holder of this document is advised that information contained hereon reflects the Company's findings at the time of its intervention only and within the limits of Client's instructions, if any. The Company's sole responsibility is to its Client and this document does not exonerate parties to a transaction from exercising all their rights and obligations under the transaction documents. This document cannot be reproduced except in full, without prior written approval of the Company. Any unauthorized alteration, forgery or falsification of the content or appearance of this document is unlawful and offenders may be prosecuted to the fullest extent of the law.
SGS Taiwan Ltd. 台灣檢驗科技股份有限公司
No.134,Wu Kung Road, New Taipei Industrial Park, Wuku District, New Taipei City, Taiwan 24803/新北市五股區新北產業園區五工路 134 號
t (886-2) 2299-3279 f (886-2) 2298-0488 www.tw.sgs.com
Member of SGS Group

DASY/EASY - Parameters of Probe: EX3DV4 - SN:3848

Calibration Parameter Determined in Head Tissue Simulating Media

f (MHz) [C]	Relative Permittivity [F]	Conductivity (S/m) [F]	ConvF X	ConvF Y	ConvF Z	Alpha [G]	Depth [G] (mm)	Unct. (k=2)
750	41.9	0.89	9.57	9.57	9.57	0.65	0.67	± 12.0 %
835	41.5	0.90	9.19	9.19	9.19	0.46	0.79	± 12.0 %
900	41.5	0.97	8.98	8.98	8.98	0.25	1.08	± 12.0 %
1450	40.5	1.20	8.10	8.10	8.10	0.62	0.73	± 12.0 %
1750	40.1	1.37	7.91	7.91	7.91	0.80	0.58	± 12.0 %
1900	40.0	1.40	7.65	7.65	7.65	0.59	0.67	± 12.0 %
2000	40.0	1.40	7.68	7.68	7.68	0.43	0.79	± 12.0 %
2450	39.2	1.80	6.91	6.91	6.91	0.43	0.76	± 12.0 %
2600	39.0	1.96	6.71	6.71	6.71	0.34	0.94	± 12.0 %
5200	36.0	4.66	5.35	5.35	5.35	0.35	1.80	± 13.1 %
5300	35.9	4.76	5.14	5.14	5.14	0.35	1.80	± 13.1 %
5600	35.5	5.07	4.53	4.53	4.53	0.35	1.80	± 13.1 %
5800	35.3	5.27	4.78	4.78	4.78	0.40	1.80	± 13.1 %

[C] Frequency validity of ± 100 MHz only applies for DASY v4.4 and higher (see Page 2), else it is restricted to ± 50 MHz. The uncertainty is the RSS of the ConvF uncertainty at calibration frequency and the uncertainty for the indicated frequency band.
[F] At frequencies below 3 GHz, the validity of tissue parameters (ε and σ) can be relaxed to ± 10% if liquid compensation formula is applied to measured SAR values. At frequencies above 3 GHz, the validity of tissue parameters (ε and σ) is restricted to ± 5%. The uncertainty is the RSS of the ConvF uncertainty for indicated target tissue parameters.
[G] Alpha/Depth are determined during calibration. SPEAG warrants that the remaining deviation due to the boundary effect after compensation is always less than ± 1% for frequencies below 3 GHz and below ± 2% for frequencies between 3-6 GHz at any distance larger than half the probe tip diameter from the boundary.

Unless otherwise stated the results shown in this test report refer only to the sample(s) tested and such sample(s) are retained for 90 days only.
除非另有說明，此報告結果僅對測試之樣品負責，同時此樣品僅保留90天。本報告未經本公司書面許可，不可部份複製。
This document is issued by the Company subject to its General Conditions of Service printed overleaf, available on request or accessible at www.sgs.com/terms_and_conditions.htm and, for electronic format documents, subject to Terms and Conditions for Electronic Documents at www.sgs.com/terms_e-document.htm. Attention is drawn to the limitation of liability, indemnification and jurisdiction issues defined therein. Any holder of this document is advised that information contained hereon reflects the Company's findings at the time of its intervention only and within the limits of Client's instructions, if any. The Company's sole responsibility is to its Client and this document does not exonerate parties to a transaction from exercising all their rights and obligations under the transaction documents. This document cannot be reproduced except in full, without prior written approval of the Company. Any unauthorized alteration, forgery or falsification of the content or appearance of this document is unlawful and offenders may be prosecuted to the fullest extent of the law.
SGS Taiwan Ltd. 台灣檢驗科技股份有限公司
No.134,Wu Kung Road, New Taipei Industrial Park, Wuku District, New Taipei City, Taiwan 24803/新北市五股區新北產業園區五工路 134 號
t (886-2) 2299-3279 f (886-2) 2298-0488 www.tw.sgs.com
Member of SGS Group

DASY/EASY - Parameters of Probe: EX3DV4 - SN:3848

Calibration Parameter Determined in Body Tissue Simulating Media

f (MHz) [C]	Relative Permittivity [F]	Conductivity (S/m) [F]	ConvF X	ConvF Y	ConvF Z	Alpha [G]	Depth [G] (mm)	Unct. (k=2)
750	55.5	0.96	9.45	9.45	9.45	0.46	0.83	± 12.0 %
835	55.2	0.97	9.29	9.29	9.29	0.47	0.79	± 12.0 %
900	55.0	1.05	9.13	9.13	9.13	0.43	0.83	± 12.0 %
1450	54.0	1.30	7.82	7.82	7.82	0.43	0.81	± 12.0 %
1750	53.4	1.49	7.58	7.58	7.58	0.53	0.76	± 12.0 %
1900	53.3	1.52	7.29	7.29	7.29	0.34	0.98	± 12.0 %
2000	53.3	1.52	7.46	7.46	7.46	0.52	0.76	± 12.0 %
2450	52.7	1.95	6.93	6.93	6.93	0.80	0.56	± 12.0 %
2600	52.5	2.16	6.70	6.70	6.70	0.76	0.58	± 12.0 %
5200	49.0	5.30	4.83	4.83	4.83	0.40	1.90	± 13.1 %
5300	48.9	5.42	4.66	4.66	4.66	0.40	1.90	± 13.1 %
5600	48.5	5.77	3.98	3.98	3.98	0.50	1.90	± 13.1 %
5800	48.2	6.00	4.22	4.22	4.22	0.50	1.90	± 13.1 %

[C] Frequency validity of ± 100 MHz only applies for DASY v4.4 and higher (see Page 2), else it is restricted to ± 50 MHz. The uncertainty is the RSS of the ConvF uncertainty at calibration frequency and the uncertainty for the indicated frequency band.
[F] At frequencies below 3 GHz, the validity of tissue parameters (ε and σ) can be relaxed to ± 10% if liquid compensation formula is applied to measured SAR values. At frequencies above 3 GHz, the validity of tissue parameters (ε and σ) is restricted to ± 5%. The uncertainty is the RSS of the ConvF uncertainty for indicated target tissue parameters.
[G] Alpha/Depth are determined during calibration. SPEAG warrants that the remaining deviation due to the boundary effect after compensation is always less than ± 1% for frequencies below 3 GHz and below ± 2% for frequencies between 3-6 GHz at any distance larger than half the probe tip diameter from the boundary.

Unless otherwise stated the results shown in this test report refer only to the sample(s) tested and such sample(s) are retained for 90 days only.
除非另有說明，此報告結果僅對測試之樣品負責，同時此樣品僅保留90天。本報告未經本公司書面許可，不可部份複製。
This document is issued by the Company subject to its General Conditions of Service printed overleaf, available on request or accessible at www.sgs.com/terms_and_conditions.htm and, for electronic format documents, subject to Terms and Conditions for Electronic Documents at www.sgs.com/terms_e-document.htm. Attention is drawn to the limitation of liability, indemnification and jurisdiction issues defined therein. Any holder of this document is advised that information contained hereon reflects the Company's findings at the time of its intervention only and within the limits of Client's instructions, if any. The Company's sole responsibility is to its Client and this document does not exonerate parties to a transaction from exercising all their rights and obligations under the transaction documents. This document cannot be reproduced except in full, without prior written approval of the Company. Any unauthorized alteration, forgery or falsification of the content or appearance of this document is unlawful and offenders may be prosecuted to the fullest extent of the law.
SGS Taiwan Ltd. 台灣檢驗科技股份有限公司
No.134,Wu Kung Road, New Taipei Industrial Park, Wuku District, New Taipei City, Taiwan 24803/新北市五股區新北產業園區五工路 134 號
t (886-2) 2299-3279 f (886-2) 2298-0488 www.tw.sgs.com
Member of SGS Group

EX3DV4- SN:3848 April 24, 2014

Frequency Response of E-Field
(TEM-Cell:ifi110 EXX, Waveguide: R22)

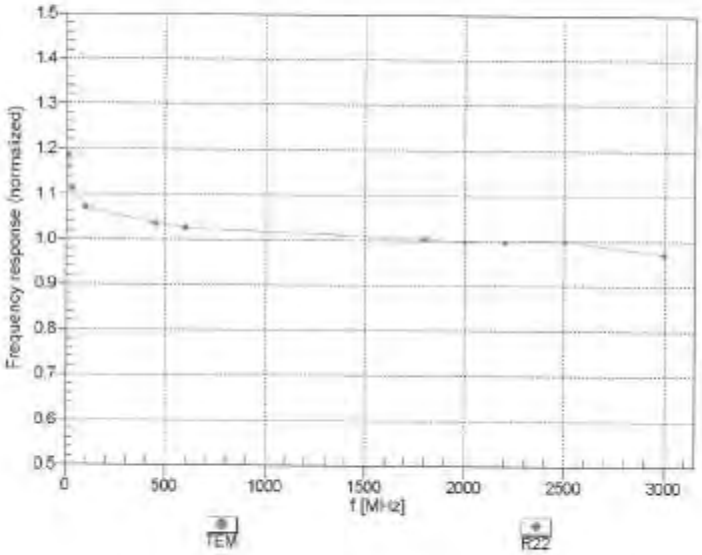

Uncertainty of Frequency Response of E-field: ± 6.3% (k=2)

Unless otherwise stated the results shown in this test report refer only to the sample(s) tested and such sample(s) are retained for 90 days only.
除非另有說明，此報告結果僅對測試之樣品負責，同時此樣品僅保留90天。本報告未經本公司書面許可，不可部份複製。
This document is issued by the Company subject to its General Conditions of Service printed overleaf, available on request or accessible at www.sgs.com/terms_and_conditions.htm and, for electronic format documents, subject to Terms and Conditions for Electronic Documents at www.sgs.com/terms_e-document.htm. Attention is drawn to the limitation of liability, indemnification and jurisdiction issues defined therein. Any holder of this document is advised that information contained hereon reflects the Company's findings at the time of its intervention only and within the limits of Client's instructions, if any. The Company's sole responsibility is to its Client and this document does not exonerate parties to a transaction from exercising all their rights and obligations under the transaction documents. This document cannot be reproduced except in full, without prior written approval of the Company. Any unauthorized alteration, forgery or falsification of the content or appearance of this document is unlawful and offenders may be prosecuted to the fullest extent of the law.
SGS Taiwan Ltd. 台灣檢驗科技股份有限公司
No.134,Wu Kung Road, New Taipei Industrial Park, Wuku District, New Taipei City, Taiwan 24803/新北市五股區新北產業園區五工路 134 號
t (886-2) 2299-3279 f (886-2) 2298-0488 www.tw.sgs.com
Member of SGS Group

Receiving Pattern (ϕ), ϑ = 0°

f=600 MHz,TEM

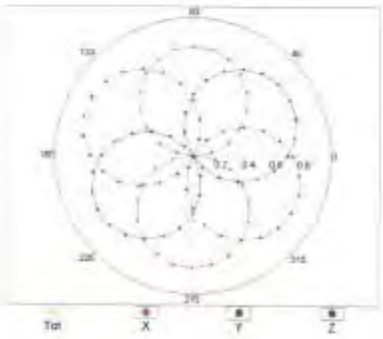

f=1800 MHz,R22

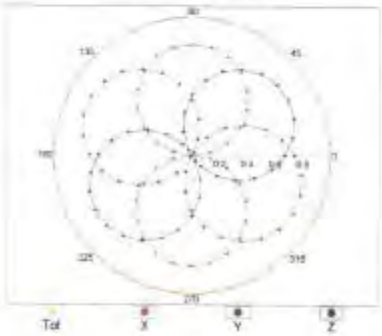

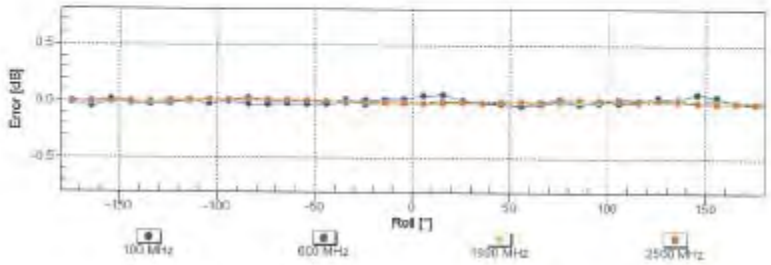

Uncertainty of Axial Isotropy Assessment: ± 0.5% (k=2)

Unless otherwise stated the results shown in this test report refer only to the sample(s) tested and such sample(s) are retained for 90 days only.
除非另有說明，此報告結果僅對測試之樣品負責，同時此樣品僅保留90天。本報告未經本公司書面許可，不可部份複製。

This document is issued by the Company subject to its General Conditions of Service printed overleaf, available on request or accessible at www.sgs.com/terms_and_conditions.htm and, for electronic format documents, subject to Terms and Conditions for Electronic Documents at www.sgs.com/terms_e-document.htm. Attention is drawn to the limitation of liability, indemnification and jurisdiction issues defined therein. Any holder of this document is advised that information contained hereon reflects the Company's findings at the time of its intervention only and within the limits of Client's instructions, if any. The Company's sole responsibility is to its Client and this document does not exonerate parties to a transaction from exercising all their rights and obligations under the transaction documents. This document cannot be reproduced except in full, without prior written approval of the Company. Any unauthorized alteration, forgery or falsification of the content or appearance of this document is unlawful and offenders may be prosecuted to the fullest extent of the law.

SGS Taiwan Ltd. 台灣檢驗科技股份有限公司
No.134,Wu Kung Road, New Taipei Industrial Park, Wuku District, New Taipei City, Taiwan 24803/新北市五股區新北產業園區五工路 134 號
t (886-2) 2299-3279 f (886-2) 2298-0488 www.tw.sgs.com
Member of SGS Group

Dynamic Range f(SAR$_{head}$)
(TEM cell , f_{eval}= 1900 MHz)

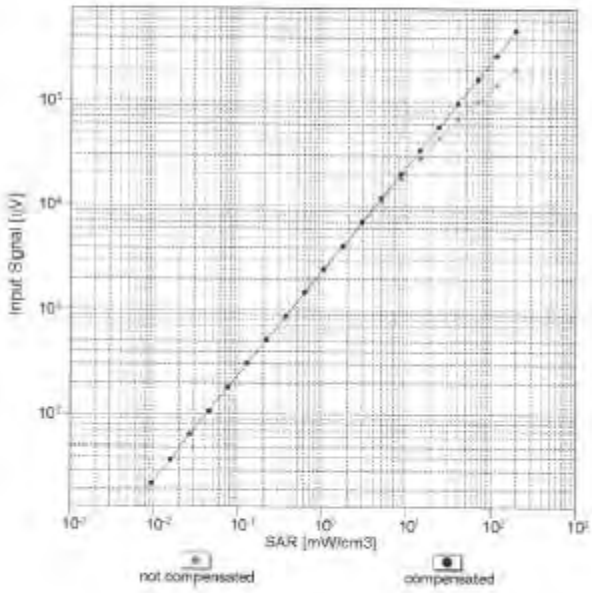

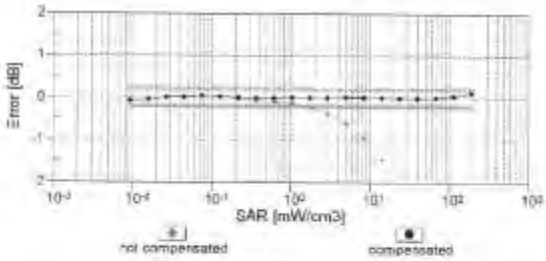

Uncertainty of Linearity Assessment: ± 0.6% (k=2)

Unless otherwise stated the results shown in this test report refer only to the sample(s) tested and such sample(s) are retained for 90 days only.
除非另有說明，此報告結果僅對測試之樣品負責，同時此樣品僅保留90天。本報告未經本公司書面許可，不可部份複製。
This document is issued by the Company subject to its General Conditions of Service printed overleaf, available on request or accessible at www.sgs.com/terms_and_conditions.htm and, for electronic format documents, subject to Terms and Conditions for Electronic Documents at www.sgs.com/terms_e-document.htm. Attention is drawn to the limitation of liability, indemnification and jurisdiction issues defined therein. Any holder of this document is advised that information contained hereon reflects the Company's findings at the time of its intervention only and within the limits of Client's instructions, if any. The Company's sole responsibility is to its Client and this document does not exonerate parties to a transaction from exercising all their rights and obligations under the transaction documents. This document cannot be reproduced except in full, without prior written approval of the Company. Any unauthorized alteration, forgery or falsification of the content or appearance of this document is unlawful and offenders may be prosecuted to the fullest extent of the law.

SGS Taiwan Ltd. 台灣檢驗科技股份有限公司
No.134,Wu Kung Road, New Taipei Industrial Park, Wuku District, New Taipei City, Taiwan 24803/新北市五股區新北產業園區五工路 134 號
t (886-2) 2299-3279 f (886-2) 2298-0488 www.tw.sgs.com
Member of SGS Group

EX3DV4– SN:3846 April 24, 2014

Conversion Factor Assessment

f = 835 MHz WGLS R9 (H_convF)

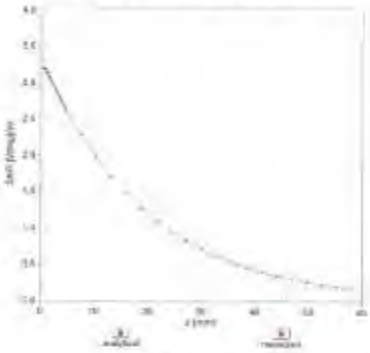

f = 1900 MHz WGLS R22 (H_convF)

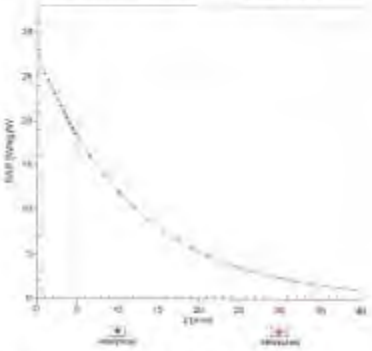

Deviation from Isotropy in Liquid

Error (ϕ, ϑ), f = 900 MHz

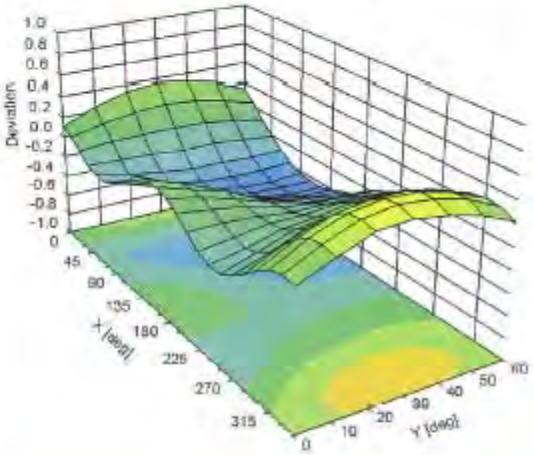

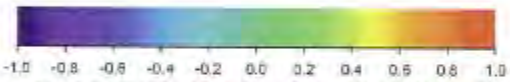

Uncertainty of Spherical Isotropy Assessment: ± 2.6% (k=2)

Certificate No. EX3-3846_Apr14 Page 10 of 11

Unless otherwise stated the results shown in this test report refer only to the sample(s) tested and such sample(s) are retained for 90 days only.
除非另有說明，此報告結果僅對測試之樣品負責，同時此樣品僅保留90天。本報告未經本公司書面許可，不可部份複製。

This document is issued by the Company subject to its General Conditions of Service printed overleaf, available on request or accessible at www.sgs.com/terms_and_conditions.htm and, for electronic format documents, subject to Terms and Conditions for Electronic Documents at www.sgs.com/terms_e-document.htm. Attention is drawn to the limitation of liability, indemnification and jurisdiction issues defined therein. Any holder of this document is advised that information contained hereon reflects the Company's findings at the time of its intervention only and within the limits of Client's instructions, if any. The Company's sole responsibility is to its Client and this document does not exonerate parties to a transaction from exercising all their rights and obligations under the transaction documents. This document cannot be reproduced except in full, without prior written approval of the Company. Any unauthorized alteration, forgery or falsification of the content or appearance of this document is unlawful and offenders may be prosecuted to the fullest extent of the law.

DASY/EASY - Parameters of Probe: EX3DV4 - SN:3848

Other Probe Parameters

Sensor Arrangement	Triangular
Connector Angle (°)	-54.3
Mechanical Surface Detection Mode	enabled
Optical Surface Detection Mode	disabled
Probe Overall Length	337 mm
Probe Body Diameter	10 mm
Tip Length	9 mm
Tip Diameter	2.5 mm
Probe Tip to Sensor X Calibration Point	1 mm
Probe Tip to Sensor Y Calibration Point	1 mm
Probe Tip to Sensor Z Calibration Point	1 mm
Recommended Measurement Distance from Surface	2 mm

Unless otherwise stated the results shown in this test report refer only to the sample(s) tested and such sample(s) are retained for 90 days only.
除非另有說明，此報告結果僅對測試之樣品負責，同時此樣品僅保留90天。本報告未經本公司書面許可，不可部份複製。
This document is issued by the Company subject to its General Conditions of Service printed overleaf, available on request or accessible at www.sgs.com/terms_and_conditions.htm and, for electronic format documents, subject to Terms and Conditions for Electronic Documents at www.sgs.com/terms_e-document.htm. Attention is drawn to the limitation of liability, indemnification and jurisdiction issues defined therein. Any holder of this document is advised that information contained hereon reflects the Company's findings at the time of its intervention only and within the limits of Client's instructions, if any. The Company's sole responsibility is to its Client and this document does not exonerate parties to a transaction from exercising all their rights and obligations under the transaction documents. This document cannot be reproduced except in full, without prior written approval of the Company. Any unauthorized alteration, forgery or falsification of the content or appearance of this document is unlawful and offenders may be prosecuted to the fullest extent of the law.

SGS Taiwan Ltd. 台灣檢驗科技股份有限公司
No.134,Wu Kung Road, New Taipei Industrial Park, Wuku District, New Taipei City, Taiwan 24803/新北市五股區新北產業園區五工路 134 號
t (886-2) 2299-3279 f (886-2) 2298-0488 www.tw.sgs.com
Member of SGS Group

8. Uncertainty Budget

Measurement Uncertainty evaluation template for DUT SAR test
IEEE 1528

A	c	D	e		f	g	h=c * f / e	i=c * g / e	k
Source of Uncertainty	Tolerance/ Uncertainty	Probability	Div	Div Value	ci (1g)	ci (10g)	Standard uncertainty	Standard uncertainty	vi, or Veff
Measurement system									
Probe calibration	6.55%	N	1	1	1	1	6.55%	6.55%	∞
Isotropy , Axial	3.50%	R	√3	1.732	1	1	2.02%	2.02%	∞
Isotropy, Hemispherical	9.60%	R	√3	1.732	1	1	5.54%	5.54%	∞
Boundary Effect	1.00%	R	√3	1.732	1	1	0.58%	0.58%	∞
Linearity	4.70%	R	√3	1.732	1	1	2.71%	2.71%	∞
Detection Limits	1.00%	R	√3	1.732	1	1	0.58%	0.58%	∞
Readout Electronics	0.30%	N	1	1	1	1	0.30%	0.30%	∞
Response time	0.80%	R	√3	1.732	1	1	0.46%	0.46%	∞
Integration Time	2.60%	R	√3	1.732	1	1	1.50%	1.50%	∞
Measurement drift (class A evaluation)	1.75%	R	√3	1.732	1	1	1.01%	1.01%	∞
RF ambient condition - noise	3.00%	R	√3	1.732	1	1	1.73%	1.73%	∞
RF ambient conditions - reflections	3.00%	R	√3	1.732	1	1	1.73%	1.73%	∞
Probe positioner Mechanical restrictions	0.40%	R	√3	1.732	1	1	0.23%	0.23%	∞
Probe Positioning with respect to phantom	2.90%	R	√3	1.732	1	1	1.67%	1.67%	∞
Post-processing	1.00%	R	√3	1.732	1	1	0.58%	0.58%	∞
Max SAR Eval	1.00%	R	√3	1.732	1	1	0.58%	0.58%	∞
Test Sample related									
Test sample positioning	2.90%	N	1	1	1	1	2.90%	2.90%	M-1
Device Holder Uncertainty	3.60%	N	1	1	1	1	3.60%	3.60%	M-1
Drift of output power	5.00%	R	√3	1.732	1	1	2.89%	2.89%	∞
Phantom and Setup									
Phantom Uncertainty	4.00%	R	√3	1.732	1	1	2.31%	2.31%	∞
Deviation from reference	4.36%	N	1	1	0.64	0.43	2.79%	1.87%	M
Deviation from reference	4.47%	N	1	1	0.6	0.49	2.68%	2.19%	M
Combined standard uncertainty		RSS					12.20%	11.92%	
Expant uncertainty (95% confidence							24.40%	23.85%	

Unless otherwise stated the results shown in this test report refer only to the sample(s) tested and such sample(s) are retained for 90 days only.
除非另有說明，此報告結果僅對測試之樣品負責，同時此樣品僅保留90天。本報告未經本公司書面許可，不可部份複製。

This document is issued by the Company subject to its General Conditions of Service printed overleaf, available on request or accessible at www.sgs.com/terms_and_conditions.htm and, for electronic format documents, subject to Terms and Conditions for Electronic Documents at www.sgs.com/terms_e-document.htm. Attention is drawn to the limitation of liability, indemnification and jurisdiction issues defined therein. Any holder of this document is advised that information contained hereon reflects the Company's findings at the time of its intervention only and within the limits of Client's instructions, if any. The Company's sole responsibility is to its Client and this document does not exonerate parties to a transaction from exercising all their rights and obligations under the transaction documents. This document cannot be reproduced except in full, without prior written approval of the Company. Any unauthorized alteration, forgery or falsification of the content or appearance of this document is unlawful and offenders may be prosecuted to the fullest extent of the law.

9. Phantom Description

Schmid & Partner Engineering AG

s p e a g

Zeughausstrasse 43, 8004 Zurich, Switzerland
Phone +41 1 245 9700, Fax +41 1 245 9779
info@speag.com, http://www.speag.com

Certificate of Conformity / First Article Inspection

Item	SAM Twin Phantom V4.0
Type No	QD 000 P40 C
Series No	TP-1150 and higher
Manufacturer	SPEAG Zeughausstrasse 43 CH-8004 Zürich Switzerland

Tests
The series production process used allows the limitation to test of first articles.
Complete tests were made on the pre-series Type No. QD 000 P40 AA, Serial No. TP-1001 and on the series first article Type No. QD 000 P40 BA, Serial No. TP-1006. Certain parameters have been retested using further series items (called samples) or are tested at each item.

Test	Requirement	Details	Units tested
Dimensions	Compliant with the geometry according to the CAD model.	IT'IS CAD File (*)	First article, Samples
Material thickness of shell	Compliant with the requirements according to the standards	2mm +/- 0.2mm in flat and specific areas of head section	First article, Samples, TP-1314 ff.
Material thickness at ERP	Compliant with the requirements according to the standards	6mm +/- 0.2mm at ERP	First article, All items
Material parameters	Dielectric parameters for required frequencies	300 MHz – 6 GHz: Relative permittivity < 5, Loss tangent < 0.05	Material samples
Material resistivity	The material has been tested to be compatible with the liquids defined in the standards if handled and cleaned according to the instructions. Observe technical Note for material compatibility.	DEGMBE based simulating liquids	Pre-series, First article, Material samples
Sagging	Compliant with the requirements according to the standards. Sagging of the flat section when filled with tissue simulating liquid	< 1% typical < 0.8% if filled with 155mm of HSL900 and without DUT below	Prototypes, Sample testing

Standards
[1] CENELEC EN 50361
[2] IEEE Std 1528-2003
[3] IEC 62209 Part I
[4] FCC OET Bulletin 65, Supplement C, Edition 01-01
(*) The IT'IS CAD file is derived from [2] and is also within the tolerance requirements of the shapes of the other documents.

Conformity
Based on the sample tests above, we certify that this item is in compliance with the uncertainty requirements of SAR measurements specified in standards [1] to [4].

Date 07.07.2005

Signature / Stamp

s p e a g
Schmid & Partner Engineering AG
Zeughausstrasse 43, 8004 Zurich, Switzerland
Phone +41 1 245 9700, Fax +41 1 245 9779
info@speag.com, http://www.speag.com

Unless otherwise stated the results shown in this test report refer only to the sample(s) tested and such sample(s) are retained for 90 days only.
除非另有說明，此報告結果僅對測試之樣品負責，同時此樣品僅保留90天。本報告未經本公司書面許可，不可部份複製。
This document is issued by the Company subject to its General Conditions of Service printed overleaf, available on request or accessible at www.sgs.com/terms_and_conditions.htm and, for electronic format documents, subject to Terms and Conditions for Electronic Documents at www.sgs.com/terms_e-document.htm. Attention is drawn to the limitation of liability, indemnification and jurisdiction issues defined therein. Any holder of this document is advised that information contained hereon reflects the Company's findings at the time of its intervention only and within the limits of Client's instructions, if any. The Company's sole responsibility is to its Client and this document does not exonerate parties to a transaction from exercising all their rights and obligations under the transaction documents. This document cannot be reproduced except in full, without prior written approval of the Company. Any unauthorized alteration, forgery or falsification of the content or appearance of this document is unlawful and offenders may be prosecuted to the fullest extent of the law.

10. System Validation from Original Equipment Supplier

Calibration Laboratory of
Schmid & Partner
Engineering AG
Zeughausstrasse 43, 8004 Zurich, Switzerland

S Schweizerischer Kalibrierdienst
C Service suisse d'étalonnage
S Servizio svizzero di taratura
Swiss Calibration Service

Accredited by the Swiss Accreditation Service (SAS)
The Swiss Accreditation Service is one of the signatories to the EA Multilateral Agreement for the recognition of calibration certificates

Accreditation No.: SCS 108

Client SGS-TW (Auden)

Certificate No: D835V2-4d063_Aug14

CALIBRATION CERTIFICATE

Object	D835V2 - SN: 4d063
Calibration procedure(s)	QA CAL-05.v9 Calibration procedure for dipole validation kits above 700 MHz
Calibration date	August 28, 2014

This calibration certificate documents the traceability to national standards, which realize the physical units of measurements (SI). The measurements and the uncertainties with confidence probability are given on the following pages and are part of the certificate.

All calibrations have been conducted in the closed laboratory facility: environment temperature (22 ± 3)°C and humidity < 70%.

Calibration Equipment used (M&TE critical for calibration)

Primary Standards	ID #	Cal Date (Certificate No.)	Scheduled Calibration
Power meter EPM-442A	GB37480704	09-Oct-13 (No. 217-01827)	Oct-14
Power sensor HP 8481A	US37292783	09-Oct-13 (No. 217-01827)	Oct-14
Power sensor HP 8481A	MY41092317	09-Oct-13 (No. 217-01828)	Oct-14
Reference 20 dB Attenuator	SN: 5058 (20k)	03-Apr-14 (No. 217-01916)	Apr-15
Type-N mismatch combination	SN: 5047.2 / 06327	03-Apr-14 (No. 217-01921)	Apr-15
Reference Probe ES3DV3	SN: 3205	30-Dec-13 (No. ES3-3205_Dec13)	Dec-14
DAE4	SN: 601	18-Aug-14 (No. DAE4-601_Aug14)	Aug-15
Secondary Standards	**ID #**	**Check Date (in house)**	**Scheduled Check**
RF generator R&S SMT-06	100005	04-Aug-99 (in house check Oct-13)	In house check: Oct-16
Network Analyzer HP 8753E	US37390585 S4206	18-Oct-01 (in house check Oct-13)	In house check: Oct-14

	Name	Function	Signature
Calibrated by:	Michael Weber	Laboratory Technician	M.Weber
Approved by:	Katja Pokovic	Technical Manager	

Issued: August 28, 2014

The calibration certificate shall not be reproduced except in full without written approval of the laboratory.

Certificate No: D835V2-4d063_Aug14 Page 1 of 8

Unless otherwise stated the results shown in this test report refer only to the sample(s) tested and such sample(s) are retained for 90 days only.
除非另有說明，此報告結果僅對測試之樣品負責，同時此樣品僅保留90天。本報告未經本公司書面許可，不可部份複製。
This document is issued by the Company subject to its General Conditions of Service printed overleaf, available on request or accessible at www.sgs.com/terms_and_conditions.htm and, for electronic format documents, subject to Terms and Conditions for Electronic Documents at www.sgs.com/terms_e-document.htm. Attention is drawn to the limitation of liability, indemnification and jurisdiction issues defined therein. Any holder of this document is advised that information contained hereon reflects the Company's findings at the time of its intervention only and within the limits of Client's instructions, if any. The Company's sole responsibility is to its Client and this document does not exonerate parties to a transaction from exercising all their rights and obligations under the transaction documents. This document cannot be reproduced except in full, without prior written approval of the Company. Any unauthorized alteration, forgery or falsification of the content or appearance of this document is unlawful and offenders may be prosecuted to the fullest extent of the law.

Calibration Laboratory of
Schmid & Partner
Engineering AG
Zeughausstrasse 43, 8004 Zurich, Switzerland

S Schweizerischer Kalibrierdienst
C Service suisse d'étalonnage
S Servizio svizzero di taratura
Swiss Calibration Service

Accredited by the Swiss Accreditation Service (SAS)
The Swiss Accreditation Service is one of the signatories to the EA Multilateral Agreement for the recognition of calibration certificates

Accreditation No.: SCS 108

Glossary:

TSL	tissue simulating liquid
ConvF	sensitivity in TSL / NORM x,y,z
N/A	not applicable or not measured

Calibration is Performed According to the Following Standards:

a) IEEE Std 1528-2013, "IEEE Recommended Practice for Determining the Peak Spatial-Averaged Specific Absorption Rate (SAR) in the Human Head from Wireless Communications Devices: Measurement Techniques", June 2013
b) IEC 62209-1, "Procedure to measure the Specific Absorption Rate (SAR) for hand-held devices used in close proximity to the ear (frequency range of 300 MHz to 3 GHz)", February 2005
c) KDB 865664, "SAR Measurement Requirements for 100 MHz to 6 GHz"

Additional Documentation:

d) DASY4/5 System Handbook

Methods Applied and Interpretation of Parameters:

- *Measurement Conditions:* Further details are available from the Validation Report at the end of the certificate. All figures stated in the certificate are valid at the frequency indicated.
- *Antenna Parameters with TSL:* The dipole is mounted with the spacer to position its feed point exactly below the center marking of the flat phantom section, with the arms oriented parallel to the body axis.
- *Feed Point Impedance and Return Loss:* These parameters are measured with the dipole positioned under the liquid filled phantom. The impedance stated is transformed from the measurement at the SMA connector to the feed point. The Return Loss ensures low reflected power. No uncertainty required.
- *Electrical Delay:* One-way delay between the SMA connector and the antenna feed point. No uncertainty required.
- *SAR measured:* SAR measured at the stated antenna input power.
- *SAR normalized:* SAR as measured, normalized to an input power of 1 W at the antenna connector.
- *SAR for nominal TSL parameters:* The measured TSL parameters are used to calculate the nominal SAR result.

The reported uncertainty of measurement is stated as the standard uncertainty of measurement multiplied by the coverage factor k=2, which for a normal distribution corresponds to a coverage probability of approximately 95%.

Unless otherwise stated the results shown in this test report refer only to the sample(s) tested and such sample(s) are retained for 90 days only.
除非另有說明，此報告結果僅對測試之樣品負責，同時此樣品僅保留90天。本報告未經本公司書面許可，不可部份複製。
This document is issued by the Company subject to its General Conditions of Service printed overleaf, available on request or accessible at www.sgs.com/terms_and_conditions.htm and, for electronic format documents, subject to Terms and Conditions for Electronic Documents at www.sgs.com/terms_e-document.htm. Attention is drawn to the limitation of liability, indemnification and jurisdiction issues defined therein. Any holder of this document is advised that information contained hereon reflects the Company's findings at the time of its intervention only and within the limits of Client's instructions, if any. The Company's sole responsibility is to its Client and this document does not exonerate parties to a transaction from exercising all their rights and obligations under the transaction documents. This document cannot be reproduced except in full, without prior written approval of the Company. Any unauthorized alteration, forgery or falsification of the content or appearance of this document is unlawful and offenders may be prosecuted to the fullest extent of the law.

Measurement Conditions

DASY system configuration, as far as not given on page 1.

DASY Version	DASY5	V52.8.8
Extrapolation	Advanced Extrapolation	
Phantom	Modular Flat Phantom	
Distance Dipole Center - TSL	15 mm	with Spacer
Zoom Scan Resolution	dx, dy, dz = 5 mm	
Frequency	835 MHz ± 1 MHz	

Head TSL parameters

The following parameters and calculations were applied.

	Temperature	Permittivity	Conductivity
Nominal Head TSL parameters	22.0 °C	41.5	0.90 mho/m
Measured Head TSL parameters	(22.0 ± 0.2) °C	42.0 ± 6 %	0.94 mho/m ± 6 %
Head TSL temperature change during test	< 0.5 °C	----	----

SAR result with Head TSL

SAR averaged over 1 cm³ (1 g) of Head TSL	Condition	
SAR measured	250 mW input power	2.38 W/kg
SAR for nominal Head TSL parameters	normalized to 1W	**9.24 W/kg ± 17.0 % (k=2)**

SAR averaged over 10 cm³ (10 g) of Head TSL	condition	
SAR measured	250 mW input power	1.55 W/kg
SAR for nominal Head TSL parameters	normalized to 1W	**6.05 W/kg ± 16.5 % (k=2)**

Body TSL parameters

The following parameters and calculations were applied.

	Temperature	Permittivity	Conductivity
Nominal Body TSL parameters	22.0 °C	55.2	0.97 mho/m
Measured Body TSL parameters	(22.0 ± 0.2) °C	55.2 ± 6 %	1.01 mho/m ± 6 %
Body TSL temperature change during test	< 0.5 °C	----	----

SAR result with Body TSL

SAR averaged over 1 cm³ (1 g) of Body TSL	Condition	
SAR measured	250 mW input power	2.41 W/kg
SAR for nominal Body TSL parameters	normalized to 1W	**9.35 W/kg ± 17.0 % (k=2)**

SAR averaged over 10 cm³ (10 g) of Body TSL	condition	
SAR measured	250 mW input power	1.59 W/kg
SAR for nominal Body TSL parameters	normalized to 1W	**6.21 W/kg ± 16.5 % (k=2)**

Unless otherwise stated the results shown in this test report refer only to the sample(s) tested and such sample(s) are retained for 90 days only.
除非另有說明，此報告結果僅對測試之樣品負責，同時此樣品僅保留90天。本報告未經本公司書面許可，不可部份複製。
This document is issued by the Company subject to its General Conditions of Service printed overleaf, available on request or accessible at www.sgs.com/terms_and_conditions.htm and, for electronic format documents, subject to Terms and Conditions for Electronic Documents at www.sgs.com/terms_e-document.htm. Attention is drawn to the limitation of liability, indemnification and jurisdiction issues defined therein. Any holder of this document is advised that information contained hereon reflects the Company's findings at the time of its intervention only and within the limits of Client's instructions, if any. The Company's sole responsibility is to its Client and this document does not exonerate parties to a transaction from exercising all their rights and obligations under the transaction documents. This document cannot be reproduced except in full, without prior written approval of the Company. Any unauthorized alteration, forgery or falsification of the content or appearance of this document is unlawful and offenders may be prosecuted to the fullest extent of the law.

SGS Taiwan Ltd. 台灣檢驗科技股份有限公司
No.134,Wu Kung Road, New Taipei Industrial Park, Wuku District, New Taipei City, Taiwan 24803/新北市五股區新北產業園區五工路 134 號
t (886-2) 2299-3279 f (886-2) 2298-0488 www.tw.sgs.com
Member of SGS Group

Appendix (Additional assessments outside the scope of SCS108)

Antenna Parameters with Head TSL

Impedance, transformed to feed point	51.7 Ω - 3.6 jΩ
Return Loss	- 28.2 dB

Antenna Parameters with Body TSL

Impedance, transformed to feed point	47.1 Ω - 5.8 jΩ
Return Loss	- 23.7 dB

General Antenna Parameters and Design

Electrical Delay (one direction)	1.391 ns

After long term use with 100W radiated power, only a slight warming of the dipole near the feedpoint can be measured.

The dipole is made of standard semirigid coaxial cable. The center conductor of the feeding line is directly connected to the second arm of the dipole. The antenna is therefore short-circuited for DC-signals. On some of the dipoles, small end caps are added to the dipole arms in order to improve matching when loaded according to the position as explained in the "Measurement Conditions" paragraph. The SAR data are not affected by this change. The overall dipole length is still according to the Standard.
No excessive force must be applied to the dipole arms, because they might bend or the soldered connections near the feedpoint may be damaged.

Additional EUT Data

Manufactured by	SPEAG
Manufactured on	November 27, 2006

Unless otherwise stated the results shown in this test report refer only to the sample(s) tested and such sample(s) are retained for 90 days only.
除非另有說明，此報告結果僅對測試之樣品負責，同時此樣品僅保留90天。本報告未經本公司書面許可，不可部份複製。
This document is issued by the Company subject to its General Conditions of Service printed overleaf, available on request or accessible at www.sgs.com/terms_and_conditions.htm and, for electronic format documents, subject to Terms and Conditions for Electronic Documents at www.sgs.com/terms_e-document.htm. Attention is drawn to the limitation of liability, indemnification and jurisdiction issues defined therein. Any holder of this document is advised that information contained hereon reflects the Company's findings at the time of its intervention only and within the limits of Client's instructions, if any. The Company's sole responsibility is to its Client and this document does not exonerate parties to a transaction from exercising all their rights and obligations under the transaction documents. This document cannot be reproduced except in full, without prior written approval of the Company. Any unauthorized alteration, forgery or falsification of the content or appearance of this document is unlawful and offenders may be prosecuted to the fullest extent of the law.
SGS Taiwan Ltd. 台灣檢驗科技股份有限公司
No.134,Wu Kung Road, New Taipei Industrial Park, Wuku District, New Taipei City, Taiwan 24803/新北市五股區新北產業園區五工路 134 號
t (886-2) 2299-3279 f (886-2) 2298-0488 www.tw.sgs.com
Member of SGS Group

DASY5 Validation Report for Head TSL

Date: 28.08.2014

Test Laboratory: SPEAG, Zurich, Switzerland

DUT: Dipole 835 MHz; Type: D835V2; Serial: D835V2 - SN: 4d063

Communication System: UID 0 - CW; Frequency: 835 MHz
Medium parameters used: f = 835 MHz; σ = 0.94 S/m; ε_r = 42; ρ = 1000 kg/m^3
Phantom section: Flat Section
Measurement Standard: DASY5 (IEEE/IEC/ANSI C63.19-2011)

DASY52 Configuration:

- Probe: ES3DV3 - SN3205; ConvF(6.22, 6.22, 6.22); Calibrated: 30.12.2013;
- Sensor-Surface: 3mm (Mechanical Surface Detection)
- Electronics: DAE4 Sn601; Calibrated: 18.08.2014
- Phantom: Flat Phantom 4.9L; Type: QD000P49AA; Serial: 1001
- DASY52 52.8.8(1222); SEMCAD X 14.6.10(7331)

Dipole Calibration for Head Tissue/Pin=250 mW, d=15mm/Zoom Scan (7x7x7)/Cube 0:
Measurement grid: dx=5mm, dy=5mm, dz=5mm
Reference Value = 56.23 V/m; Power Drift = -0.02 dB
Peak SAR (extrapolated) = 3.53 W/kg
SAR(1 g) = 2.38 W/kg; SAR(10 g) = 1.55 W/kg
Maximum value of SAR (measured) = 2.78 W/kg

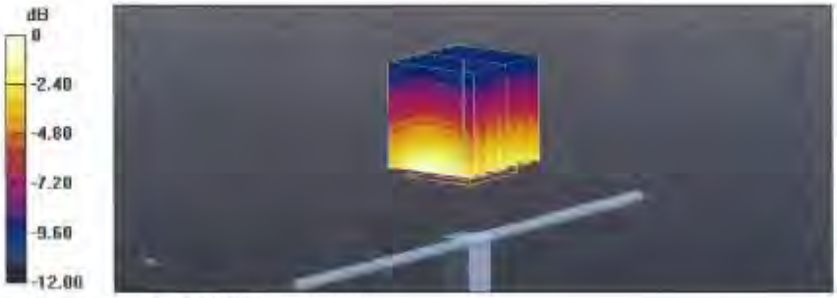

0 dB = 2.78 W/kg = 4.44 dBW/kg

Unless otherwise stated the results shown in this test report refer only to the sample(s) tested and such sample(s) are retained for 90 days only.
除非另有說明，此報告結果僅對測試之樣品負責，同時此樣品僅保留90天。本報告未經本公司書面許可，不可部份複製。
This document is issued by the Company subject to its General Conditions of Service printed overleaf, available on request or accessible at www.sgs.com/terms_and_conditions.htm and, for electronic format documents, subject to Terms and Conditions for Electronic Documents at www.sgs.com/terms_e-document.htm. Attention is drawn to the limitation of liability, indemnification and jurisdiction issues defined therein. Any holder of this document is advised that information contained hereon reflects the Company's findings at the time of its intervention only and within the limits of Client's instructions, if any. The Company's sole responsibility is to its Client and this document does not exonerate parties to a transaction from exercising all their rights and obligations under the transaction documents. This document cannot be reproduced except in full, without prior written approval of the Company. Any unauthorized alteration, forgery or falsification of the content or appearance of this document is unlawful and offenders may be prosecuted to the fullest extent of the law.
SGS Taiwan Ltd. 台灣檢驗科技股份有限公司
No.134,Wu Kung Road, New Taipei Industrial Park, Wuku District, New Taipei City, Taiwan 24803/新北市五股區新北產業園區五工路 134 號
t (886-2) 2299-3279 f (886-2) 2298-0488 www.tw.sgs.com
Member of SGS Group

Impedance Measurement Plot for Head TSL

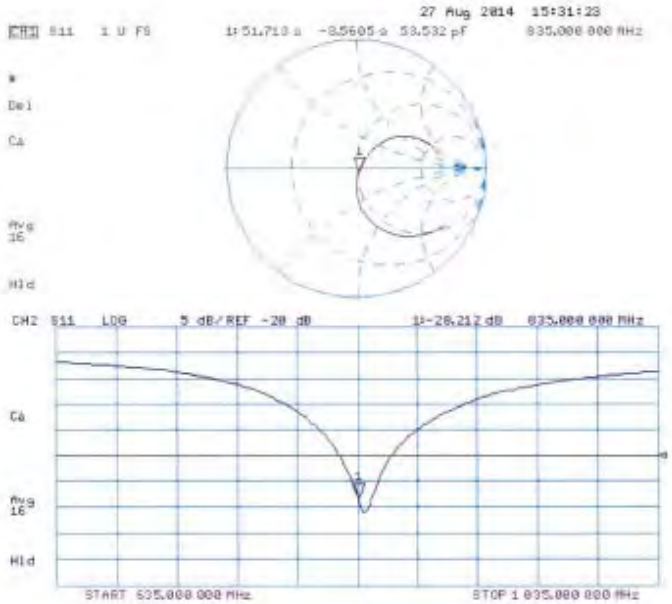

Unless otherwise stated the results shown in this test report refer only to the sample(s) tested and such sample(s) are retained for 90 days only.
除非另有說明，此報告結果僅對測試之樣品負責，同時此樣品僅保留90天。本報告未經本公司書面許可，不可部份複製。

This document is issued by the Company subject to its General Conditions of Service printed overleaf, available on request or accessible at www.sgs.com/terms_and_conditions.htm and, for electronic format documents, subject to Terms and Conditions for Electronic Documents at www.sgs.com/terms_e-document.htm. Attention is drawn to the limitation of liability, indemnification and jurisdiction issues defined therein. Any holder of this document is advised that information contained hereon reflects the Company's findings at the time of its intervention only and within the limits of Client's instructions, if any. The Company's sole responsibility is to its Client and this document does not exonerate parties to a transaction from exercising all their rights and obligations under the transaction documents. This document cannot be reproduced except in full, without prior written approval of the Company. Any unauthorized alteration, forgery or falsification of the content or appearance of this document is unlawful and offenders may be prosecuted to the fullest extent of the law.

SGS Taiwan Ltd. 台灣檢驗科技股份有限公司
No.134,Wu Kung Road, New Taipei Industrial Park, Wuku District, New Taipei City, Taiwan 24803/新北市五股區新北產業園區五工路 134 號
t (886-2) 2299-3279 f (886-2) 2298-0488 www.tw.sgs.com
Member of SGS Group

DASY5 Validation Report for Body TSL

Date: 27.08.2014

Test Laboratory: SPEAG, Zurich, Switzerland

DUT: Dipole 835 MHz; Type: D835V2; Serial: D835V2 - SN: 4d063

Communication System: UID 0 - CW; Frequency: 835 MHz
Medium parameters used: f = 835 MHz; σ = 1.01 S/m; ε_r = 55.2; ρ = 1000 kg/m^3
Phantom section: Flat Section
Measurement Standard: DASY5 (IEEE/IEC/ANSI C63.19-2011)

DASY52 Configuration:

- Probe: ES3DV3 - SN3205; ConvF(6.09, 6.09, 6.09); Calibrated: 30.12.2013;
- Sensor-Surface: 3mm (Mechanical Surface Detection)
- Electronics: DAE4 Sn601; Calibrated: 18.08.2014
- Phantom: Flat Phantom 4.9L; Type: QD000P49AA; Serial: 1001
- DASY52 52.8.8(1222); SEMCAD X 14.6.10(7331)

Dipole Calibration for Body Tissue/Pin=250 mW, d=15mm/Zoom Scan (7x7x7)/Cube 0:
Measurement grid: dx=5mm, dy=5mm, dz=5mm
Reference Value = 54.65 V/m; Power Drift = -0.03 dB
Peak SAR (extrapolated) = 3.53 W/kg
SAR(1 g) = 2.41 W/kg; SAR(10 g) = 1.59 W/kg
Maximum value of SAR (measured) = 2.80 W/kg

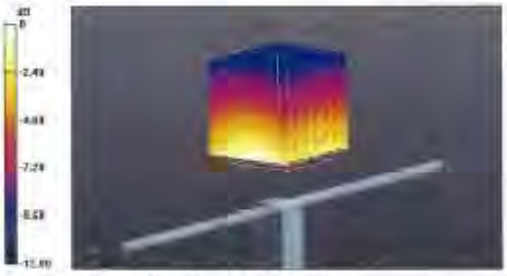

0 dB = 2.80 W/kg = 4.47 dBW/kg

Unless otherwise stated the results shown in this test report refer only to the sample(s) tested and such sample(s) are retained for 90 days only.
除非另有說明，此報告結果僅對測試之樣品負責，同時此樣品僅保留90天。本報告未經本公司書面許可，不可部份複製。
This document is issued by the Company subject to its General Conditions of Service printed overleaf, available on request or accessible at www.sgs.com/terms_and_conditions.htm and, for electronic format documents, subject to Terms and Conditions for Electronic Documents at www.sgs.com/terms_e-document.htm. Attention is drawn to the limitation of liability, indemnification and jurisdiction issues defined therein. Any holder of this document is advised that information contained hereon reflects the Company's findings at the time of its intervention only and within the limits of Client's instructions, if any. The Company's sole responsibility is to its Client and this document does not exonerate parties to a transaction from exercising all their rights and obligations under the transaction documents. This document cannot be reproduced except in full, without prior written approval of the Company. Any unauthorized alteration, forgery or falsification of the content or appearance of this document is unlawful and offenders may be prosecuted to the fullest extent of the law.
SGS Taiwan Ltd. 台灣檢驗科技股份有限公司
No.134,Wu Kung Road, New Taipei Industrial Park, Wuku District, New Taipei City, Taiwan 24803/新北市五股區新北產業園區五工路 134 號
t (886-2) 2299-3279 f (886-2) 2298-0488 www.tw.sgs.com
Member of SGS Group

Impedance Measurement Plot for Body TSL

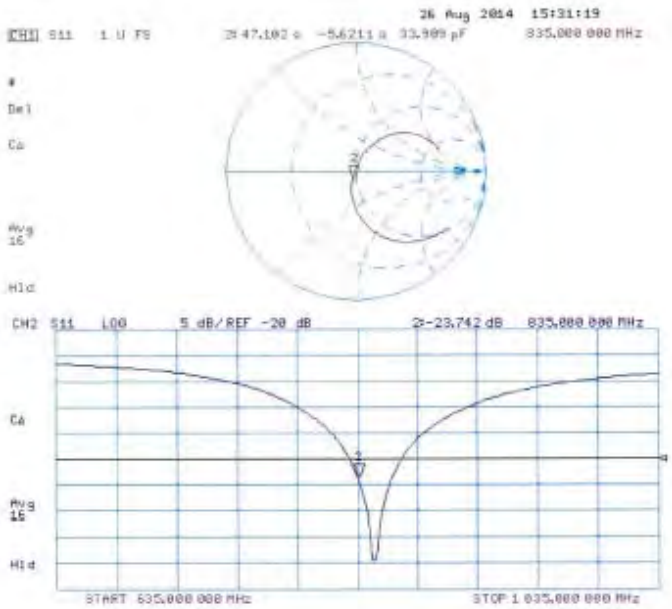

Unless otherwise stated the results shown in this test report refer only to the sample(s) tested and such sample(s) are retained for 90 days only.
除非另有說明，此報告結果僅對測試之樣品負責，同時此樣品僅保留90天。本報告未經本公司書面許可，不可部份複製。

This document is issued by the Company subject to its General Conditions of Service printed overleaf, available on request or accessible at www.sgs.com/terms_and_conditions.htm and, for electronic format documents, subject to Terms and Conditions for Electronic Documents at www.sgs.com/terms_e-document.htm. Attention is drawn to the limitation of liability, indemnification and jurisdiction issues defined therein. Any holder of this document is advised that information contained hereon reflects the Company's findings at the time of its intervention only and within the limits of Client's instructions, if any. The Company's sole responsibility is to its Client and this document does not exonerate parties to a transaction from exercising all their rights and obligations under the transaction documents. This document cannot be reproduced except in full, without prior written approval of the Company. Any unauthorized alteration, forgery or falsification of the content or appearance of this document is unlawful and offenders may be prosecuted to the fullest extent of the law.

SGS Taiwan Ltd. 台灣檢驗科技股份有限公司
No.134,Wu Kung Road, New Taipei Industrial Park, Wuku District, New Taipei City, Taiwan 24803/新北市五股區新北產業園區五工路 134 號
t (886-2) 2299-3279 f (886-2) 2298-0488 www.tw.sgs.com
Member of SGS Group

Calibration Laboratory of
Schmid & Partner
Engineering AG
Zeughausstrasse 43, 8004 Zurich, Switzerland

Schweizerischer KalibrierDienst
Service suisse d'étalonnage
Servizio svizzero di taratura
Swiss Calibration Service

Accredited by the Swiss Accreditation Service (SAS)
The Swiss Accreditation Service is one of the signatories to the EA Multilateral Agreement for the recognition of calibration certificates

Accreditation No.: SCS 108

Client SGS-TW (Auden)

Certificate No: D1750V2-1008_Aug14

CALIBRATION CERTIFICATE

Object	D1750V2 - SN: 1008
Calibration procedure(s)	QA CAL-05.v9 Calibration procedure for dipole validation kits above 700 MHz
Calibration date	August 28, 2014

This calibration certificate documents the traceability to national standards, which realize the physical units of measurements (SI). The measurements and the uncertainties with confidence probability are given on the following pages and are part of the certificate.

All calibrations have been conducted in the closed laboratory facility: environment temperature (22 ± 3)°C and humidity < 70%.

Calibration Equipment used (M&TE critical for calibration)

Primary Standards	ID #	Cal Date (Certificate No.)	Scheduled Calibration
Power meter EPM-442A	GB37480704	09-Oct-13 (No. 217-01827)	Oct-14
Power sensor HP 8481A	US37292783	09-Oct-13 (No. 217-01827)	Oct-14
Power sensor HP 8481A	MY41092317	09-Oct-13 (No. 217-01828)	Oct-14
Reference 20 dB Attenuator	SN: 5058 (20k)	03-Apr-14 (No. 217-01918)	Apr-15
Type-N mismatch combination	SN: 5047.2 / 06327	03-Apr-14 (No. 217-01921)	Apr-15
Reference Probe ES3DV3	SN: 3205	30-Dec-13 (No. ES3-3205_Dec13)	Dec-14
DAE4	SN: 601	18-Aug-14 (No. DAE4-601_Aug14)	Aug-15
Secondary Standards	**ID #**	**Check Date (in house)**	**Scheduled Check**
RF generator R&S SMT-06	100005	04-Aug-99 (in house check Oct-13)	in house check: Oct-15
Network Analyzer HP 8753E	US37390585 S4206	18-Oct-01 (in house check Oct-13)	in house check: Oct-14

	Name	Function	Signature
Calibrated by:	Michael Weber	Laboratory Technician	
Approved by:	Katja Pokovic	Technical Manager	

Issued: August 28, 2014

This calibration certificate shall not be reproduced except in full without written approval of the laboratory.

Certificate No: D1750V2-1008_Aug14 Page 1 of 8

Unless otherwise stated the results shown in this test report refer only to the sample(s) tested and such sample(s) are retained for 90 days only.
除非另有說明，此報告結果僅對測試之樣品負責，同時此樣品僅保留90天。本報告未經本公司書面許可，不可部份複製。
This document is issued by the Company subject to its General Conditions of Service printed overleaf, available on request or accessible at www.sgs.com/terms_and_conditions.htm and, for electronic format documents, subject to Terms and Conditions for Electronic Documents at www.sgs.com/terms_e-document.htm. Attention is drawn to the limitation of liability, indemnification and jurisdiction issues defined therein. Any holder of this document is advised that information contained hereon reflects the Company's findings at the time of its intervention only and within the limits of Client's instructions, if any. The Company's sole responsibility is to its Client and this document does not exonerate parties to a transaction from exercising all their rights and obligations under the transaction documents. This document cannot be reproduced except in full, without prior written approval of the Company. Any unauthorized alteration, forgery or falsification of the content or appearance of this document is unlawful and offenders may be prosecuted to the fullest extent of the law.

Calibration Laboratory of
Schmid & Partner
Engineering AG
Zeughausstrasse 43, 8004 Zurich, Switzerland

S Schweizerischer Kalibrierdienst
C Service suisse d'étalonnage
S Servizio svizzero di taratura
S Swiss Calibration Service

Accreditation No.: **SCS 108**

Accredited by the Swiss Accreditation Service (SAS)
The Swiss Accreditation Service is one of the signatories to the EA Multilateral Agreement for the recognition of calibration certificates

Glossary:

TSL	tissue simulating liquid
ConvF	sensitivity in TSL / NORM x,y,z
N/A	not applicable or not measured

Calibration is Performed According to the Following Standards:

a) IEEE Std 1528-2013, "IEEE Recommended Practice for Determining the Peak Spatial-Averaged Specific Absorption Rate (SAR) in the Human Head from Wireless Communications Devices: Measurement Techniques", June 2013
b) IEC 62209-1, "Procedure to measure the Specific Absorption Rate (SAR) for hand-held devices used in close proximity to the ear (frequency range of 300 MHz to 3 GHz)", February 2005
c) KDB 865664, "SAR Measurement Requirements for 100 MHz to 6 GHz"

Additional Documentation:

d) DASY4/5 System Handbook

Methods Applied and Interpretation of Parameters:

- *Measurement Conditions:* Further details are available from the Validation Report at the end of the certificate. All figures stated in the certificate are valid at the frequency indicated.
- *Antenna Parameters with TSL:* The dipole is mounted with the spacer to position its feed point exactly below the center marking of the flat phantom section, with the arms oriented parallel to the body axis.
- *Feed Point Impedance and Return Loss:* These parameters are measured with the dipole positioned under the liquid filled phantom. The impedance stated is transformed from the measurement at the SMA connector to the feed point. The Return Loss ensures low reflected power. No uncertainty required.
- *Electrical Delay:* One-way delay between the SMA connector and the antenna feed point. No uncertainty required.
- *SAR measured:* SAR measured at the stated antenna input power.
- *SAR normalized:* SAR as measured, normalized to an input power of 1 W at the antenna connector.
- *SAR for nominal TSL parameters:* The measured TSL parameters are used to calculate the nominal SAR result.

The reported uncertainty of measurement is stated as the standard uncertainty of measurement multiplied by the coverage factor k=2, which for a normal distribution corresponds to a coverage probability of approximately 95%.

Unless otherwise stated the results shown in this test report refer only to the sample(s) tested and such sample(s) are retained for 90 days only.
除非另有說明，此報告結果僅對測試之樣品負責，同時此樣品僅保留90天。本報告未經本公司書面許可，不可部份複製。
This document is issued by the Company subject to its General Conditions of Service printed overleaf, available on request or accessible at www.sgs.com/terms_and_conditions.htm and, for electronic format documents, subject to Terms and Conditions for Electronic Documents at www.sgs.com/terms_e-document.htm. Attention is drawn to the limitation of liability, indemnification and jurisdiction issues defined therein. Any holder of this document is advised that information contained hereon reflects the Company's findings at the time of its intervention only and within the limits of Client's instructions, if any. The Company's sole responsibility is to its Client and this document does not exonerate parties to a transaction from exercising all their rights and obligations under the transaction documents. This document cannot be reproduced except in full, without prior written approval of the Company. Any unauthorized alteration, forgery or falsification of the content or appearance of this document is unlawful and offenders may be prosecuted to the fullest extent of the law.
SGS Taiwan Ltd. 台灣檢驗科技股份有限公司
No.134,Wu Kung Road, New Taipei Industrial Park, Wuku District, New Taipei City, Taiwan 24803/新北市五股區新北產業園區五工路 134 號
t (886-2) 2299-3279 f (886-2) 2298-0488 www.tw.sgs.com
Member of SGS Group

Measurement Conditions

DASY system configuration, as far as not given on page 1.

DASY Version	DASY5	V52.6.8
Extrapolation	Advanced Extrapolation	
Phantom	Modular Flat Phantom	
Distance Dipole Center – TSL	10 mm	with Spacer
Zoom Scan Resolution	dx, dy, dz = 5 mm	
Frequency	1750 MHz ± 1 MHz	

Head TSL parameters

The following parameters and calculations were applied.

	Temperature	Permittivity	Conductivity
Nominal Head TSL parameters	22.0 °C	40.1	1.37 mho/m
Measured Head TSL parameters	(22.0 ± 0.2) °C	39.2 ± 6 %	1.37 mho/m ± 6 %
Head TSL temperature change during test	< 0.5 °C	—	—

SAR result with Head TSL

SAR averaged over 1 cm³ (1 g) of Head TSL	Condition	
SAR measured	250 mW input power	9.26 W/kg
SAR for nominal Head TSL parameters	normalized to 1W	**36.9 W/kg ± 17.0 % (k=2)**

SAR averaged over 10 cm³ (10 g) of Head TSL	condition	
SAR measured	250 mW input power	4.91 W/kg
SAR for nominal Head TSL parameters	normalized to 1W	**19.6 W/kg ± 16.5 % (k=2)**

Body TSL parameters

The following parameters and calculations were applied.

	Temperature	Permittivity	Conductivity
Nominal Body TSL parameters	22.0 °C	53.4	1.49 mho/m
Measured Body TSL parameters	(22.0 ± 0.2) °C	52.0 ± 6 %	1.49 mho/m ± 6 %
Body TSL temperature change during test	< 0.5 °C	—	—

SAR result with Body TSL

SAR averaged over 1 cm³ (1 g) of Body TSL	Condition	
SAR measured	250 mW input power	9.44 W/kg
SAR for nominal Body TSL parameters	normalized to 1W	**37.5 W/kg ± 17.0 % (k=2)**

SAR averaged over 10 cm³ (10 g) of Body TSL	condition	
SAR measured	250 mW input power	5.07 W/kg
SAR for nominal Body TSL parameters	normalized to 1W	**20.2 W/kg ± 16.5 % (k=2)**

Unless otherwise stated the results shown in this test report refer only to the sample(s) tested and such sample(s) are retained for 90 days only.
除非另有說明，此報告結果僅對測試之樣品負責，同時此樣品僅保留90天。本報告未經本公司書面許可，不可部份複製。
This document is issued by the Company subject to its General Conditions of Service printed overleaf, available on request or accessible at www.sgs.com/terms_and_conditions.htm and, for electronic format documents, subject to Terms and Conditions for Electronic Documents at www.sgs.com/terms_e-document.htm. Attention is drawn to the limitation of liability, indemnification and jurisdiction issues defined therein. Any holder of this document is advised that information contained hereon reflects the Company's findings at the time of its intervention only and within the limits of Client's instructions, if any. The Company's sole responsibility is to its Client and this document does not exonerate parties to a transaction from exercising all their rights and obligations under the transaction documents. This document cannot be reproduced except in full, without prior written approval of the Company. Any unauthorized alteration, forgery or falsification of the content or appearance of this document is unlawful and offenders may be prosecuted to the fullest extent of the law.
SGS Taiwan Ltd. 台灣檢驗科技股份有限公司
No.134,Wu Kung Road, New Taipei Industrial Park, Wuku District, New Taipei City, Taiwan 24803/新北市五股區新北產業園區五工路 134 號
t (886-2) 2299-3279 f (886-2) 2298-0488 www.tw.sgs.com
Member of SGS Group

Appendix (Additional assessments outside the scope of SCS108)

Antenna Parameters with Head TSL

Impedance, transformed to feed point	50.4 Ω + 0.3 jΩ
Return Loss	- 46.4 dB

Antenna Parameters with Body TSL

Impedance, transformed to feed point	46.4 Ω + 0.3 jΩ
Return Loss	- 28.5 dB

General Antenna Parameters and Design

Electrical Delay (one direction)	1.222 ns

After long term use with 100W radiated power, only a slight warming of the dipole near the feedpoint can be measured.

The dipole is made of standard semirigid coaxial cable. The center conductor of the feeding line is directly connected to the second arm of the dipole. The antenna is therefore short-circuited for DC-signals. On some of the dipoles, small end caps are added to the dipole arms in order to improve matching when loaded according to the position as explained in the "Measurement Conditions" paragraph. The SAR data are not affected by this change. The overall dipole length is still according to the Standard.
No excessive force must be applied to the dipole arms, because they might bend or the soldered connections near the feedpoint may be damaged.

Additional EUT Data

Manufactured by	SPEAG
Manufactured on	February 11, 2009

Unless otherwise stated the results shown in this test report refer only to the sample(s) tested and such sample(s) are retained for 90 days only.
除非另有說明，此報告結果僅對測試之樣品負責，同時此樣品僅保留90天。本報告未經本公司書面許可，不可部份複製。
This document is issued by the Company subject to its General Conditions of Service printed overleaf, available on request or accessible at www.sgs.com/terms_and_conditions.htm and, for electronic format documents, subject to Terms and Conditions for Electronic Documents at www.sgs.com/terms_e-document.htm. Attention is drawn to the limitation of liability, indemnification and jurisdiction issues defined therein. Any holder of this document is advised that information contained hereon reflects the Company's findings at the time of its intervention only and within the limits of Client's instructions, if any. The Company's sole responsibility is to its Client and this document does not exonerate parties to a transaction from exercising all their rights and obligations under the transaction documents. This document cannot be reproduced except in full, without prior written approval of the Company. Any unauthorized alteration, forgery or falsification of the content or appearance of this document is unlawful and offenders may be prosecuted to the fullest extent of the law.
SGS Taiwan Ltd. 台灣檢驗科技股份有限公司
No.134,Wu Kung Road, New Taipei Industrial Park, Wuku District, New Taipei City, Taiwan 24803/新北市五股區新北產業園區五工路 134 號
t (886-2) 2299-3279 f (886-2) 2298-0488 www.tw.sgs.com
Member of SGS Group

DASY5 Validation Report for Head TSL

Date: 28.08.2014

Test Laboratory: SPEAG, Zurich, Switzerland

DUT: Dipole 1750 MHz; Type: D1750V2; Serial: D1750V2 - SN: 1008

Communication System: UID 0 - CW; Frequency: 1750 MHz
Medium parameters used: f = 1750 MHz; σ = 1.37 S/m; ε_r = 39.2; ρ = 1000 kg/m^3
Phantom section: Flat Section
Measurement Standard: DASY5 (IEEE/IEC/ANSI C63.19-2011)

DASY52 Configuration:

- Probe: ES3DV3 - SN3205; ConvF(5.23, 5.23, 5.23); Calibrated: 30.12.2013;
- Sensor-Surface: 3mm (Mechanical Surface Detection)
- Electronics: DAE4 Sn601; Calibrated: 18.08.2014
- Phantom: Flat Phantom 5.0 (front); Type: QD000P50AA; Serial: 1001
- DASY52 52.8.8(1222); SEMCAD X 14.6.10(7331)

Dipole Calibration for Head Tissue/Pin=250 mW, d=10mm/Zoom Scan (7x7x7)/Cube 0:

Measurement grid: dx=5mm, dy=5mm, dz=5mm
Reference Value = 95.53 V/m; Power Drift = -0.01 dB
Peak SAR (extrapolated) = 16.7 W/kg
SAR(1 g) = 9.26 W/kg; SAR(10 g) = 4.91 W/kg
Maximum value of SAR (measured) = 11.6 W/kg

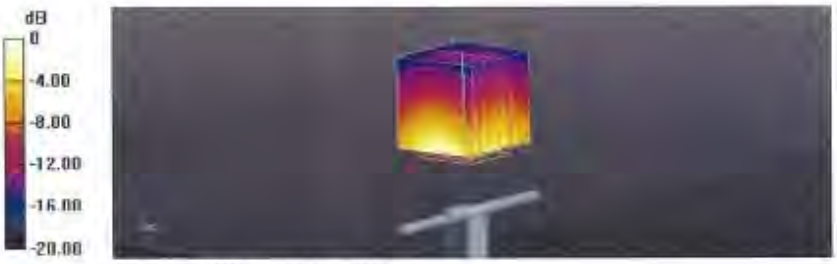

0 dB = 11.6 W/kg = 10.64 dBW/kg

Unless otherwise stated the results shown in this test report refer only to the sample(s) tested and such sample(s) are retained for 90 days only.
除非另有說明，此報告結果僅對測試之樣品負責，同時此樣品僅保留90天。本報告未經本公司書面許可，不可部份複製。
This document is issued by the Company subject to its General Conditions of Service printed overleaf, available on request or accessible at www.sgs.com/terms_and_conditions.htm and, for electronic format documents, subject to Terms and Conditions for Electronic Documents at www.sgs.com/terms_e-document.htm. Attention is drawn to the limitation of liability, indemnification and jurisdiction issues defined therein. Any holder of this document is advised that information contained hereon reflects the Company's findings at the time of its intervention only and within the limits of Client's instructions, if any. The Company's sole responsibility is to its Client and this document does not exonerate parties to a transaction from exercising all their rights and obligations under the transaction documents. This document cannot be reproduced except in full, without prior written approval of the Company. Any unauthorized alteration, forgery or falsification of the content or appearance of this document is unlawful and offenders may be prosecuted to the fullest extent of the law.
SGS Taiwan Ltd. 台灣檢驗科技股份有限公司
No.134,Wu Kung Road, New Taipei Industrial Park, Wuku District, New Taipei City, Taiwan 24803/新北市五股區新北產業園區五工路 134 號
t (886-2) 2299-3279 f (886-2) 2298-0488 www.tw.sgs.com
Member of SGS Group

Impedance Measurement Plot for Head TSL

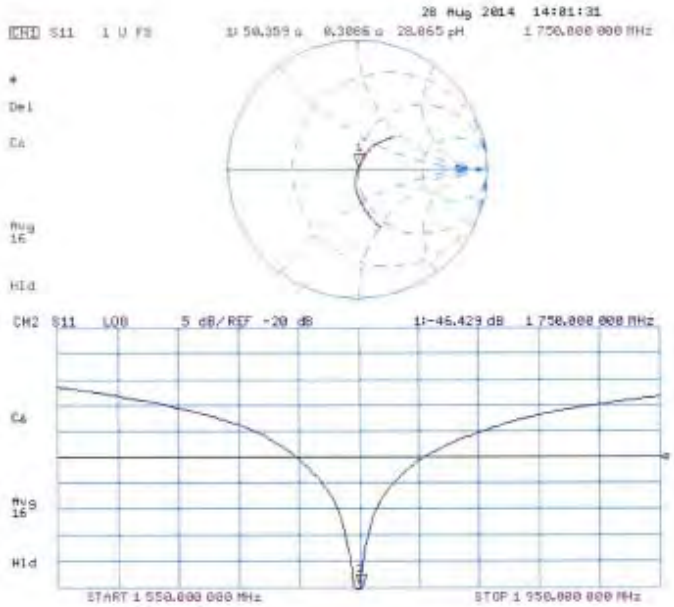

Unless otherwise stated the results shown in this test report refer only to the sample(s) tested and such sample(s) are retained for 90 days only.
除非另有說明，此報告結果僅對測試之樣品負責，同時此樣品僅保留90天。本報告未經本公司書面許可，不可部份複製。

This document is issued by the Company subject to its General Conditions of Service printed overleaf, available on request or accessible at www.sgs.com/terms_and_conditions.htm and, for electronic format documents, subject to Terms and Conditions for Electronic Documents at www.sgs.com/terms_e-document.htm. Attention is drawn to the limitation of liability, indemnification and jurisdiction issues defined therein. Any holder of this document is advised that information contained hereon reflects the Company's findings at the time of its intervention only and within the limits of Client's instructions, if any. The Company's sole responsibility is to its Client and this document does not exonerate parties to a transaction from exercising all their rights and obligations under the transaction documents. This document cannot be reproduced except in full, without prior written approval of the Company. Any unauthorized alteration, forgery or falsification of the content or appearance of this document is unlawful and offenders may be prosecuted to the fullest extent of the law.

SGS Taiwan Ltd. 台灣檢驗科技股份有限公司
No.134,Wu Kung Road, New Taipei Industrial Park, Wuku District, New Taipei City, Taiwan 24803/新北市五股區新北產業園區五工路 134 號
t (886-2) 2299-3279 f (886-2) 2298-0488 www.tw.sgs.com
Member of SGS Group

DASY5 Validation Report for Body TSL

Date: 28.08.2014

Test Laboratory: SPEAG, Zurich, Switzerland

DUT: Dipole 1750 MHz; Type: D1750V2; Serial: D1750V2 - SN: 1008

Communication System: UID 0 - CW; Frequency: 1750 MHz
Medium parameters used: f = 1750 MHz; σ = 1.49 S/m; ε_r = 52; ρ = 1000 kg/m^3
Phantom section: Flat Section
Measurement Standard: DASY5 (IEEE/IEC/ANSI C63.19-2011)

DASY52 Configuration:

- Probe: ES3DV3 - SN3205; ConvF(4.89, 4.89, 4.89); Calibrated: 30.12.2013;
- Sensor-Surface: 3mm (Mechanical Surface Detection)
- Electronics: DAE4 Sn601; Calibrated: 18.08.2014
- Phantom: Flat Phantom 5.0 (back); Type: QD000P50AA; Serial: 1002
- DASY52 52.8.8(1222); SEMCAD X 14.6.10(7331)

Dipole Calibration for Body Tissue/Pin=250 mW, d=10mm/Zoom Scan (7x7x7)/Cube 0:
Measurement grid: dx=5mm, dy=5mm, dz=5mm
Reference Value = 93.44 V/m; Power Drift = 0.01 dB
Peak SAR (extrapolated) = 16.3 W/kg
SAR(1 g) = 9.44 W/kg; SAR(10 g) = 5.07 W/kg
Maximum value of SAR (measured) = 11.9 W/kg

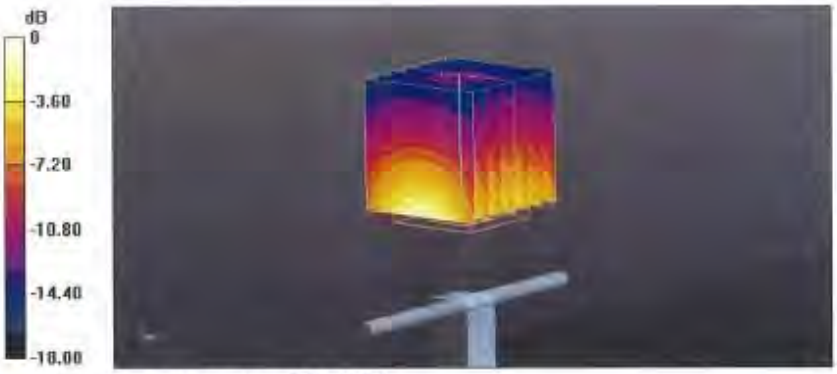

0 dB = 11.9 W/kg = 10.76 dBW/kg

Unless otherwise stated the results shown in this test report refer only to the sample(s) tested and such sample(s) are retained for 90 days only.
除非另有說明，此報告結果僅對測試之樣品負責，同時此樣品僅保留90天。本報告未經本公司書面許可，不可部份複製。
This document is issued by the Company subject to its General Conditions of Service printed overleaf, available on request or accessible at www.sgs.com/terms_and_conditions.htm and, for electronic format documents, subject to Terms and Conditions for Electronic Documents at www.sgs.com/terms_e-document.htm. Attention is drawn to the limitation of liability, indemnification and jurisdiction issues defined therein. Any holder of this document is advised that information contained hereon reflects the Company's findings at the time of its intervention only and within the limits of Client's instructions, if any. The Company's sole responsibility is to its Client and this document does not exonerate parties to a transaction from exercising all their rights and obligations under the transaction documents. This document cannot be reproduced except in full, without prior written approval of the Company. Any unauthorized alteration, forgery or falsification of the content or appearance of this document is unlawful and offenders may be prosecuted to the fullest extent of the law.
SGS Taiwan Ltd. 台灣檢驗科技股份有限公司
No.134,Wu Kung Road, New Taipei Industrial Park, Wuku District, New Taipei City, Taiwan 24803/新北市五股區新北產業園區五工路 134 號
t (886-2) 2299-3279 f (886-2) 2298-0488 www.tw.sgs.com
Member of SGS Group

Impedance Measurement Plot for Body TSL

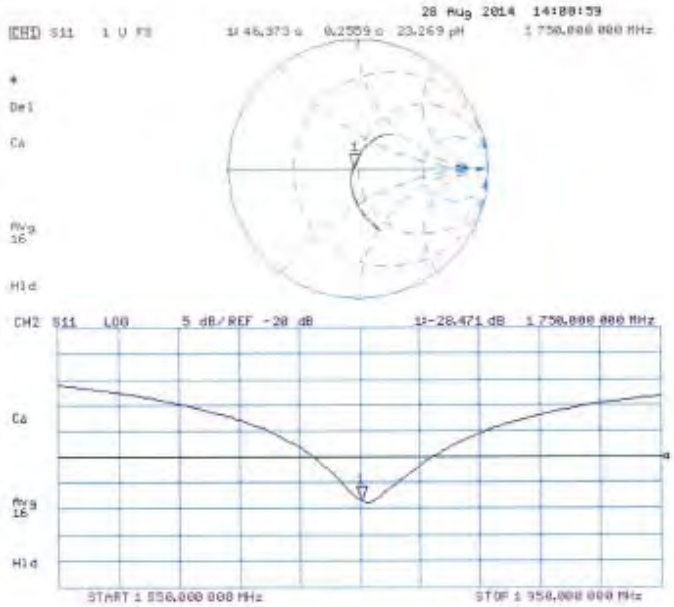

Unless otherwise stated the results shown in this test report refer only to the sample(s) tested and such sample(s) are retained for 90 days only.
除非另有說明，此報告結果僅對測試之樣品負責，同時此樣品僅保留90天。本報告未經本公司書面許可，不可部份複製。

This document is issued by the Company subject to its General Conditions of Service printed overleaf, available on request or accessible at www.sgs.com/terms_and_conditions.htm and, for electronic format documents, subject to Terms and Conditions for Electronic Documents at www.sgs.com/terms_e-document.htm. Attention is drawn to the limitation of liability, indemnification and jurisdiction issues defined therein. Any holder of this document is advised that information contained hereon reflects the Company's findings at the time of its intervention only and within the limits of Client's instructions, if any. The Company's sole responsibility is to its Client and this document does not exonerate parties to a transaction from exercising all their rights and obligations under the transaction documents. This document cannot be reproduced except in full, without prior written approval of the Company. Any unauthorized alteration, forgery or falsification of the content or appearance of this document is unlawful and offenders may be prosecuted to the fullest extent of the law.

SGS Taiwan Ltd. 台灣檢驗科技股份有限公司
No.134,Wu Kung Road, New Taipei Industrial Park, Wuku District, New Taipei City, Taiwan 24803/新北市五股區新北產業園區五工路 134 號
t (886-2) 2299-3279 f (886-2) 2298-0488 www.tw.sgs.com
Member of SGS Group

Calibration Laboratory of
Schmid & Partner
Engineering AG
Zeughausstrasse 43, 8004 Zurich, Switzerland

S Schweizerischer Kalibrierdienst
C Service suisse d'étalonnage
S Servizio svizzero di taratura
Swiss Calibration Service

Accredited by the Swiss Accreditation Service (SAS)
The Swiss Accreditation Service is one of the signatories to the EA Multilateral Agreement for the recognition of calibration certificates

Accreditation No.: SCS 108

Client SGS-TW (Auden)

Certificate No: D1900V2-5d027_Apr14

CALIBRATION CERTIFICATE

Object	D1900V2 - SN: 5d027
Calibration procedure(s)	QA CAL-05.v9 Calibration procedure for dipole validation kits above 700 MHz
Calibration date	April 23, 2014

This calibration certificate documents the traceability to national standards, which realize the physical units of measurements (SI).
The measurements and the uncertainties with confidence probability are given on the following pages and are part of the certificate.

All calibrations have been conducted in the closed laboratory facility: environment temperature (25 ± 3)°C and humidity < 70%.

Calibration Equipment used (M&TE critical for calibration)

Primary Standards	ID #	Cal Date (Certificate No.)	Scheduled Calibration
Power meter EPM-442A	GB37480704	09-Oct-13 (No. 217-01827)	Oct-14
Power sensor HP 8481A	US37292783	09-Oct-13 (No. 217-01827)	Oct-14
Power sensor HP 8481A	MY41092317	09-Oct-13 (No. 217-01828)	Oct-14
Reference 20 dB Attenuator	SN: 5058 (20k)	03-Apr-14 (No. 217-01918)	Apr-15
Type-N mismatch combination	SN: 5047.2 / 06327	03-Apr-14 (No. 217-01921)	Apr-15
Reference Probe ES3DV3	SN: 3205	30-Dec-13 (No. ES3-3205_Dec13)	Dec-14
DAE4	SN: 601	25-Apr-13 (No. DAE4-601_Apr13)	Apr-14

Secondary Standards	ID #	Check Date (in house)	Scheduled Check
RF generator R&S SMT-06	100005	04-Aug-99 (in house check Oct-13)	In house check: Oct-16
Network Analyzer HP 8753E	US37390585 S4206	18-Oct-01 (in house check Oct-13)	In house check: Oct-14

	Name	Function	Signature
Calibrated by:	Jelton Kastrati	Laboratory Technician	
Approved by:	Katja Pokovic	Technical Manager	

Issued: April 23, 2014

This calibration certificate shall not be reproduced except in full without written approval of the laboratory.

Certificate No: D1900V2-5d027_Apr14 Page 1 of 8

Unless otherwise stated the results shown in this test report refer only to the sample(s) tested and such sample(s) are retained for 90 days only.
除非另有說明，此報告結果僅對測試之樣品負責，同時此樣品僅保留90天。本報告未經本公司書面許可，不可部份複製。
This document is issued by the Company subject to its General Conditions of Service printed overleaf, available on request or accessible at www.sgs.com/terms_and_conditions.htm and, for electronic format documents, subject to Terms and Conditions for Electronic Documents at www.sgs.com/terms_e-document.htm. Attention is drawn to the limitation of liability, indemnification and jurisdiction issues defined therein. Any holder of this document is advised that information contained hereon reflects the Company's findings at the time of its intervention only and within the limits of Client's instructions, if any. The Company's sole responsibility is to its Client and this document does not exonerate parties to a transaction from exercising all their rights and obligations under the transaction documents. This document cannot be reproduced except in full, without prior written approval of the Company. Any unauthorized alteration, forgery or falsification of the content or appearance of this document is unlawful and offenders may be prosecuted to the fullest extent of the law.

Calibration Laboratory of
Schmid & Partner
Engineering AG
Zeughausstrasse 43, 8004 Zurich, Switzerland

S Schweizerischer Kalibrierdienst
C Service suisse d'étalonnage
S Servizio svizzero di taratura
Swiss Calibration Service

Accredited by the Swiss Accreditation Service (SAS)
The Swiss Accreditation Service is one of the signatories to the EA Multilateral Agreement for the recognition of calibration certificates

Accreditation No.: SCS 108

Glossary:

TSL	tissue simulating liquid
ConvF	sensitivity in TSL / NORM x,y,z
N/A	not applicable or not measured

Calibration is Performed According to the Following Standards:

a) IEEE Std 1528-2013, "IEEE Recommended Practice for Determining the Peak Spatial-Averaged Specific Absorption Rate (SAR) in the Human Head from Wireless Communications Devices: Measurement Techniques", June 2013
b) IEC 62209-1, "Procedure to measure the Specific Absorption Rate (SAR) for hand-held devices used in close proximity to the ear (frequency range of 300 MHz to 3 GHz)", February 2005
c) KDB 865664, "SAR Measurement Requirements for 100 MHz to 6 GHz"

Additional Documentation:

d) DASY4/5 System Handbook

Methods Applied and Interpretation of Parameters:

- *Measurement Conditions:* Further details are available from the Validation Report at the end of the certificate. All figures stated in the certificate are valid at the frequency indicated.
- *Antenna Parameters with TSL:* The dipole is mounted with the spacer to position its feed point exactly below the center marking of the flat phantom section, with the arms oriented parallel to the body axis.
- *Feed Point Impedance and Return Loss:* These parameters are measured with the dipole positioned under the liquid filled phantom. The impedance stated is transformed from the measurement at the SMA connector to the feed point. The Return Loss ensures low reflected power. No uncertainty required.
- *Electrical Delay:* One-way delay between the SMA connector and the antenna feed point. No uncertainty required.
- *SAR measured:* SAR measured at the stated antenna input power.
- *SAR normalized:* SAR as measured, normalized to an input power of 1 W at the antenna connector.
- *SAR for nominal TSL parameters:* The measured TSL parameters are used to calculate the nominal SAR result.

The reported uncertainty of measurement is stated as the standard uncertainty of measurement multiplied by the coverage factor k=2, which for a normal distribution corresponds to a coverage probability of approximately 95%.

Unless otherwise stated the results shown in this test report refer only to the sample(s) tested and such sample(s) are retained for 90 days only.
除非另有說明，此報告結果僅對測試之樣品負責，同時此樣品僅保留90天。本報告未經本公司書面許可，不可部份複製。
This document is issued by the Company subject to its General Conditions of Service printed overleaf, available on request or accessible at www.sgs.com/terms_and_conditions.htm and, for electronic format documents, subject to Terms and Conditions for Electronic Documents at www.sgs.com/terms_e-document.htm. Attention is drawn to the limitation of liability, indemnification and jurisdiction issues defined therein. Any holder of this document is advised that information contained hereon reflects the Company's findings at the time of its intervention only and within the limits of Client's instructions, if any. The Company's sole responsibility is to its Client and this document does not exonerate parties to a transaction from exercising all their rights and obligations under the transaction documents. This document cannot be reproduced except in full, without prior written approval of the Company. Any unauthorized alteration, forgery or falsification of the content or appearance of this document is unlawful and offenders may be prosecuted to the fullest extent of the law.

Measurement Conditions

DASY system configuration, as far as not given on page 1.

DASY Version	DASY5	V52.8.7
Extrapolation	Advanced Extrapolation	
Phantom	Modular Flat Phantom	
Distance Dipole Center - TSL	10 mm	with Spacer
Zoom Scan Resolution	dx, dy, dz = 5 mm	
Frequency	1900 MHz ± 1 MHz	

Head TSL parameters

The following parameters and calculations were applied.

	Temperature	Permittivity	Conductivity
Nominal Head TSL parameters	22.0 °C	40.0	1.40 mho/m
Measured Head TSL parameters	(22.0 ± 0.2) °C	39.1 ± 6 %	1.36 mho/m ± 6 %
Head TSL temperature change during test	< 0.5 °C	----	----

SAR result with Head TSL

SAR averaged over 1 cm³ (1 g) of Head TSL	Condition	
SAR measured	250 mW input power	9.71 W/kg
SAR for nominal Head TSL parameters	normalized to 1W	**39.3 W/kg ± 17.0 % (k=2)**

SAR averaged over 10 cm³ (10 g) of Head TSL	condition	
SAR measured	250 mW input power	5.10 W/kg
SAR for nominal Head TSL parameters	normalized to 1W	**20.6 W/kg ± 16.5 % (k=2)**

Body TSL parameters

The following parameters and calculations were applied.

	Temperature	Permittivity	Conductivity
Nominal Body TSL parameters	22.0 °C	53.3	1.52 mho/m
Measured Body TSL parameters	(22.0 ± 0.2) °C	52.4 ± 6 %	1.52 mho/m ± 6 %
Body TSL temperature change during test	< 0.5 °C	----	----

SAR result with Body TSL

SAR averaged over 1 cm³ (1 g) of Body TSL	Condition	
SAR measured	250 mW input power	9.87 W/kg
SAR for nominal Body TSL parameters	normalized to 1W	**39.3 W/kg ± 17.0 % (k=2)**

SAR averaged over 10 cm³ (10 g) of Body TSL	condition	
SAR measured	250 mW input power	5.22 W/kg
SAR for nominal Body TSL parameters	normalized to 1W	**20.8 W/kg ± 16.5 % (k=2)**

Unless otherwise stated the results shown in this test report refer only to the sample(s) tested and such sample(s) are retained for 90 days only.
除非另有說明，此報告結果僅對測試之樣品負責，同時此樣品僅保留90天。本報告未經本公司書面許可，不可部份複製。
This document is issued by the Company subject to its General Conditions of Service printed overleaf, available on request or accessible at www.sgs.com/terms_and_conditions.htm and, for electronic format documents, subject to Terms and Conditions for Electronic Documents at www.sgs.com/terms_e-document.htm. Attention is drawn to the limitation of liability, indemnification and jurisdiction issues defined therein. Any holder of this document is advised that information contained hereon reflects the Company's findings at the time of its intervention only and within the limits of Client's instructions, if any. The Company's sole responsibility is to its Client and this document does not exonerate parties to a transaction from exercising all their rights and obligations under the transaction documents. This document cannot be reproduced except in full, without prior written approval of the Company. Any unauthorized alteration, forgery or falsification of the content or appearance of this document is unlawful and offenders may be prosecuted to the fullest extent of the law.
SGS Taiwan Ltd. 台灣檢驗科技股份有限公司
No.134,Wu Kung Road, New Taipei Industrial Park, Wuku District, New Taipei City, Taiwan 24803/新北市五股區新北產業園區五工路 134 號
t (886-2) 2299-3279 f (886-2) 2298-0488 www.tw.sgs.com
Member of SGS Group

Appendix

Antenna Parameters with Head TSL

Impedance, transformed to feed point	52.5 Ω + 6.8 jΩ
Return Loss	- 23.0 dB

Antenna Parameters with Body TSL

Impedance, transformed to feed point	46.3 Ω + 2.8 jΩ
Return Loss	- 26.4 dB

General Antenna Parameters and Design

Electrical Delay (one direction)	1.199 ns

After long term use with 100W radiated power, only a slight warming of the dipole near the feedpoint can be measured.

The dipole is made of standard semirigid coaxial cable. The center conductor of the feeding line is directly connected to the second arm of the dipole. The antenna is therefore short-circuited for DC-signals. On some of the dipoles, small end caps are added to the dipole arms in order to improve matching when loaded according to the position as explained in the "Measurement Conditions" paragraph. The SAR data are not affected by this change. The overall dipole length is still according to the Standard.
No excessive force must be applied to the dipole arms, because they might bend or the soldered connections near the feedpoint may be damaged.

Additional EUT Data

Manufactured by	SPEAG
Manufactured on	December 17, 2002

Unless otherwise stated the results shown in this test report refer only to the sample(s) tested and such sample(s) are retained for 90 days only.
除非另有說明，此報告結果僅對測試之樣品負責，同時此樣品僅保留90天。本報告未經本公司書面許可，不可部份複製。
This document is issued by the Company subject to its General Conditions of Service printed overleaf, available on request or accessible at www.sgs.com/terms_and_conditions.htm and, for electronic format documents, subject to Terms and Conditions for Electronic Documents at www.sgs.com/terms_e-document.htm. Attention is drawn to the limitation of liability, indemnification and jurisdiction issues defined therein. Any holder of this document is advised that information contained hereon reflects the Company's findings at the time of its intervention only and within the limits of Client's instructions, if any. The Company's sole responsibility is to its Client and this document does not exonerate parties to a transaction from exercising all their rights and obligations under the transaction documents. This document cannot be reproduced except in full, without prior written approval of the Company. Any unauthorized alteration, forgery or falsification of the content or appearance of this document is unlawful and offenders may be prosecuted to the fullest extent of the law.
SGS Taiwan Ltd. 台灣檢驗科技股份有限公司
No.134,Wu Kung Road, New Taipei Industrial Park, Wuku District, New Taipei City, Taiwan 24803/新北市五股區新北產業園區五工路 134 號
t (886-2) 2299-3279 f (886-2) 2298-0488 www.tw.sgs.com
Member of SGS Group

DASY5 Validation Report for Head TSL

Date: 23.04.2014

Test Laboratory: SPEAG, Zurich, Switzerland

DUT: Dipole 1900 MHz; Type: D1900V2; Serial: D1900V2 - SN: 5d027

Communication System: UID 0 - CW; Frequency: 1900 MHz
Medium parameters used: f = 1900 MHz; σ = 1.36 S/m; ε_r = 39.1; ρ = 1000 kg/m^3
Phantom section: Flat Section
Measurement Standard: DASY5 (IEEE/IEC/ANSI C63.19-2007)

DASY52 Configuration:

- Probe: ES3DV3 - SN3205; ConvF(5.06, 5.06, 5.06); Calibrated: 30.12.2013;
- Sensor-Surface: 3mm (Mechanical Surface Detection)
- Electronics: DAE4 Sn601; Calibrated: 25.04.2013
- Phantom: Flat Phantom 5.0 (front); Type: QD000P50AA; Serial: 1001
- DASY52 52.8.7(1137); SEMCAD X 14.6.10(7164)

Dipole Calibration for Head Tissue/Pin=250 mW, d=10mm/Zoom Scan (7x7x7)/Cube 0:
Measurement grid: dx=5mm, dy=5mm, dz=5mm
Reference Value = 97.825 V/m; Power Drift = 0.06 dB
Peak SAR (extrapolated) = 17.8 W/kg
SAR(1 g) = 9.71 W/kg; SAR(10 g) = 5.1 W/kg
Maximum value of SAR (measured) = 12.3 W/kg

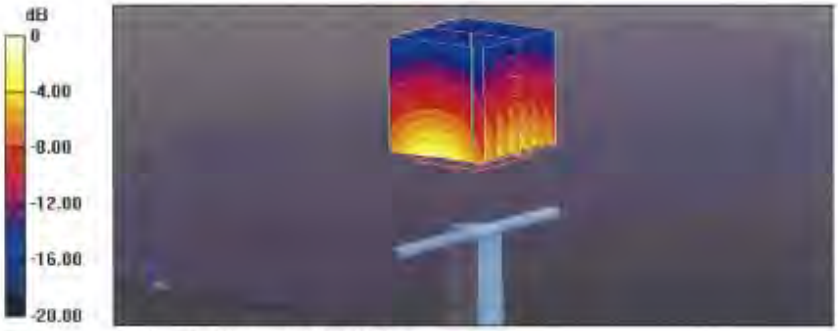

0 dB = 12.3 W/kg = 10.90 dBW/kg

Unless otherwise stated the results shown in this test report refer only to the sample(s) tested and such sample(s) are retained for 90 days only.
除非另有說明，此報告結果僅對測試之樣品負責，同時此樣品僅保留90天。本報告未經本公司書面許可，不可部份複製。
This document is issued by the Company subject to its General Conditions of Service printed overleaf, available on request or accessible at www.sgs.com/terms_and_conditions.htm and, for electronic format documents, subject to Terms and Conditions for Electronic Documents at www.sgs.com/terms_e-document.htm. Attention is drawn to the limitation of liability, indemnification and jurisdiction issues defined therein. Any holder of this document is advised that information contained hereon reflects the Company's findings at the time of its intervention only and within the limits of Client's instructions, if any. The Company's sole responsibility is to its Client and this document does not exonerate parties to a transaction from exercising all their rights and obligations under the transaction documents. This document cannot be reproduced except in full, without prior written approval of the Company. Any unauthorized alteration, forgery or falsification of the content or appearance of this document is unlawful and offenders may be prosecuted to the fullest extent of the law.
SGS Taiwan Ltd. 台灣檢驗科技股份有限公司
No.134,Wu Kung Road, New Taipei Industrial Park, Wuku District, New Taipei City, Taiwan 24803/新北市五股區新北產業園區五工路 134 號
t (886-2) 2299-3279 f (886-2) 2298-0488 www.tw.sgs.com
Member of SGS Group

Impedance Measurement Plot for Head TSL

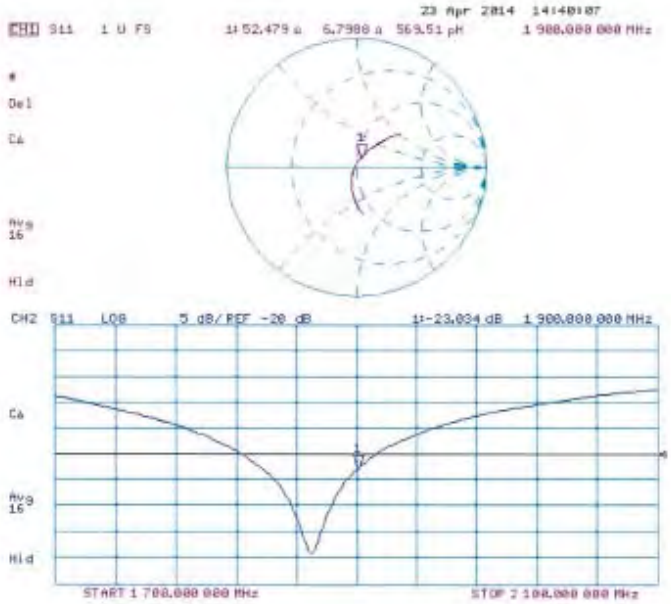

Unless otherwise stated the results shown in this test report refer only to the sample(s) tested and such sample(s) are retained for 90 days only.
除非另有說明，此報告結果僅對測試之樣品負責，同時此樣品僅保留90天。本報告未經本公司書面許可，不可部份複製。

This document is issued by the Company subject to its General Conditions of Service printed overleaf, available on request or accessible at www.sgs.com/terms_and_conditions.htm and, for electronic format documents, subject to Terms and Conditions for Electronic Documents at www.sgs.com/terms_e-document.htm. Attention is drawn to the limitation of liability, indemnification and jurisdiction issues defined therein. Any holder of this document is advised that information contained hereon reflects the Company's findings at the time of its intervention only and within the limits of Client's instructions, if any. The Company's sole responsibility is to its Client and this document does not exonerate parties to a transaction from exercising all their rights and obligations under the transaction documents. This document cannot be reproduced except in full, without prior written approval of the Company. Any unauthorized alteration, forgery or falsification of the content or appearance of this document is unlawful and offenders may be prosecuted to the fullest extent of the law.

SGS Taiwan Ltd. 台灣檢驗科技股份有限公司
No.134,Wu Kung Road, New Taipei Industrial Park, Wuku District, New Taipei City, Taiwan 24803/新北市五股區新北產業園區五工路 134 號
t (886-2) 2299-3279 f (886-2) 2298-0488 www.tw.sgs.com
Member of SGS Group

DASY5 Validation Report for Body TSL

Date: 22.04.2014

Test Laboratory: SPEAG, Zurich, Switzerland

DUT; Dipole 1900 MHz; Type: D1900V2; Serial: D1900V2 - SN: 5d027

Communication System: UID 0 - CW; Frequency: 1900 MHz
Medium parameters used: f = 1900 MHz; σ = 1.52 S/m; ε_r = 52.4; ρ = 1000 kg/m^3
Phantom section: Flat Section
Measurement Standard: DASY5 (IEEE/IEC/ANSI C63.19-2007)

DASY52 Configuration:

- Probe: ES3DV3 - SN3205; ConvF(4.76, 4.76, 4.76); Calibrated: 30.12.2013;
- Sensor-Surface: 3mm (Mechanical Surface Detection)
- Electronics: DAE4 Sn601; Calibrated: 25.04.2013
- Phantom: Flat Phantom 5.0 (back); Type: QD000P50AA; Serial: 1002
- DASY52 52.8.7(1137); SEMCAD X 14.6.10(7164)

Dipole Calibration for Body Tissue/Pin=250 mW, d=10mm 2/Zoom Scan (7x7x7)/Cube 0:
Measurement grid: dx=5mm, dy=5mm, dz=5mm
Reference Value = 94.526 V/m; Power Drift = -0.01 dB
Peak SAR (extrapolated) = 17.2 W/kg
SAR(1 g) = 9.87 W/kg; SAR(10 g) = 5.22 W/kg
Maximum value of SAR (measured) = 12.5 W/kg

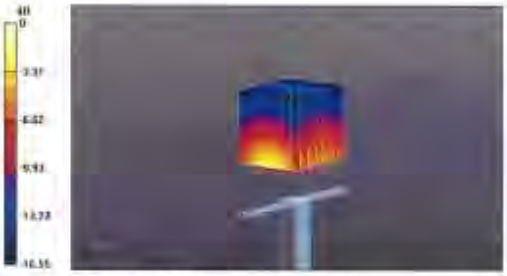

0 dB = 12.5 W/kg = 10.97 dBW/kg

Unless otherwise stated the results shown in this test report refer only to the sample(s) tested and such sample(s) are retained for 90 days only.
除非另有說明，此報告結果僅對測試之樣品負責，同時此樣品僅保留90天。本報告未經本公司書面許可，不可部份複製。
This document is issued by the Company subject to its General Conditions of Service printed overleaf, available on request or accessible at www.sgs.com/terms_and_conditions.htm and, for electronic format documents, subject to Terms and Conditions for Electronic Documents at www.sgs.com/terms_e-document.htm. Attention is drawn to the limitation of liability, indemnification and jurisdiction issues defined therein. Any holder of this document is advised that information contained hereon reflects the Company's findings at the time of its intervention only and within the limits of Client's instructions, if any. The Company's sole responsibility is to its Client and this document does not exonerate parties to a transaction from exercising all their rights and obligations under the transaction documents. This document cannot be reproduced except in full, without prior written approval of the Company. Any unauthorized alteration, forgery or falsification of the content or appearance of this document is unlawful and offenders may be prosecuted to the fullest extent of the law.
SGS Taiwan Ltd. 台灣檢驗科技股份有限公司
No.134,Wu Kung Road, New Taipei Industrial Park, Wuku District, New Taipei City, Taiwan 24803/新北市五股區新北產業園區五工路 134 號
t (886-2) 2299-3279 f (886-2) 2298-0488 www.tw.sgs.com
Member of SGS Group

Impedance Measurement Plot for Body TSL

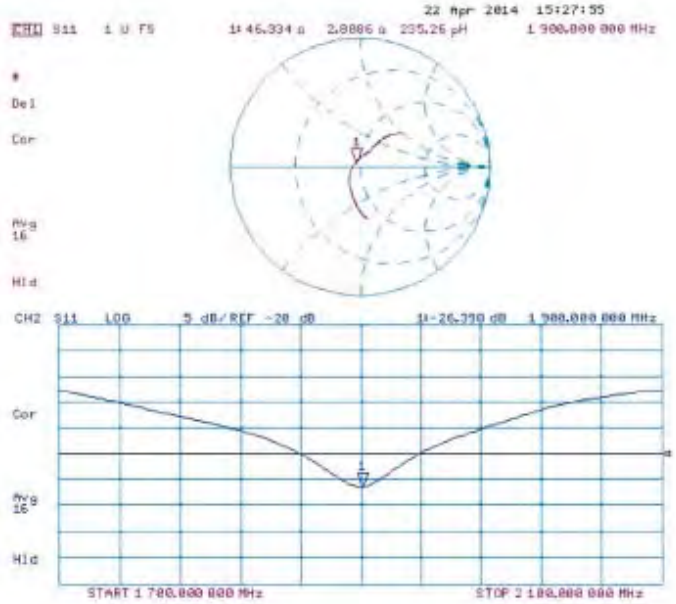

Unless otherwise stated the results shown in this test report refer only to the sample(s) tested and such sample(s) are retained for 90 days only.
除非另有說明，此報告結果僅對測試之樣品負責，同時此樣品僅保留90天。本報告未經本公司書面許可，不可部份複製。

This document is issued by the Company subject to its General Conditions of Service printed overleaf, available on request or accessible at www.sgs.com/terms_and_conditions.htm and, for electronic format documents, subject to Terms and Conditions for Electronic Documents at www.sgs.com/terms_e-document.htm. Attention is drawn to the limitation of liability, indemnification and jurisdiction issues defined therein. Any holder of this document is advised that information contained hereon reflects the Company's findings at the time of its intervention only and within the limits of Client's instructions, if any. The Company's sole responsibility is to its Client and this document does not exonerate parties to a transaction from exercising all their rights and obligations under the transaction documents. This document cannot be reproduced except in full, without prior written approval of the Company. Any unauthorized alteration, forgery or falsification of the content or appearance of this document is unlawful and offenders may be prosecuted to the fullest extent of the law.

SGS Taiwan Ltd. 台灣檢驗科技股份有限公司
No.134,Wu Kung Road, New Taipei Industrial Park, Wuku District, New Taipei City, Taiwan 24803/新北市五股區新北產業園區五工路 134 號
t (886-2) 2299-3279 f (886-2) 2298-0488 www.tw.sgs.com
Member of SGS Group

Calibration Laboratory of
Schmid & Partner
Engineering AG
Zeughausstrasse 43, 8004 Zurich, Switzerland

S Schweizerischer Kalibrierdienst
C Service suisse d'étalonnage
S Servizio svizzero di taratura
Swiss Calibration Service

Accredited by the Swiss Accreditation Service (SAS)
The Swiss Accreditation Service is one of the signatories to the EA Multilateral Agreement for the recognition of calibration certificates

Accreditation No.: **SCS 108**

Client **SGS-TW (Auden)**

Certificate No: **D2450V2-922_Nov13**

CALIBRATION CERTIFICATE

Object	D2450V2 - SN: 922
Calibration procedure(s)	QA CAL-05.v9 Calibration procedure for dipole validation kits above 700 MHz
Calibration date:	November 05, 2013

This calibration certificate documents the traceability to national standards, which realize the physical units of measurements (SI).
The measurements and the uncertainties with confidence probability are given on the following pages and are part of the certificate.

All calibrations have been conducted in the closed laboratory facility: environment temperature (22 ± 3)°C and humidity < 70%.

Calibration Equipment used (M&TE critical for calibration)

Primary Standards	ID #	Cal Date (Certificate No.)	Scheduled Calibration
Power meter EPM-442A	GB37480704	09-Oct-13 (No. 217-01827)	Oct-14
Power sensor HP 8481A	US37292783	09-Oct-13 (No. 217-01827)	Oct-14
Power sensor HP 8481A	MY41092317	09-Oct-13 (No. 217-01828)	Oct-14
Reference 20 dB Attenuator	SN: 5058 (20k)	04-Apr-13 (No. 217-01736)	Apr-14
Type-N mismatch combination	SN: 5047.3 / 06327	04-Apr-13 (No. 217-01739)	Apr-14
Reference Probe ES3DV3	SN: 3205	28-Dec-12 (No. ES3-3205_Dec12)	Dec-13
DAE4	SN: 601	25-Apr-13 (No. DAE4-601_Apr13)	Apr-14

Secondary Standards	ID #	Check Date (in house)	Scheduled Check
RF generator R&S SMT-06	100005	04-Aug-99 (in house check Oct-13)	In house check: Oct-15
Network Analyzer HP 8753E	US37390585 S4206	18-Oct-01 (in house check Oct-13)	In house check: Oct-14

	Name	Function	Signature
Calibrated by:	Israe El-Naouq	Laboratory Technician	Israe El-Naouq
Approved by:	Katja Pokovic	Technical Manager	

Issued: November 5, 2013

This calibration certificate shall not be reproduced except in full without written approval of the laboratory.

Certificate No: D2450V2-922_Nov13 Page 1 of 8

Unless otherwise stated the results shown in this test report refer only to the sample(s) tested and such sample(s) are retained for 90 days only.
除非另有說明，此報告結果僅對測試之樣品負責，同時此樣品僅保留90天。本報告未經本公司書面許可，不可部份複製。
This document is issued by the Company subject to its General Conditions of Service printed overleaf, available on request or accessible at www.sgs.com/terms_and_conditions.htm and, for electronic format documents, subject to Terms and Conditions for Electronic Documents at www.sgs.com/terms_e-document.htm. Attention is drawn to the limitation of liability, indemnification and jurisdiction issues defined therein. Any holder of this document is advised that information contained hereon reflects the Company's findings at the time of its intervention only and within the limits of Client's instructions, if any. The Company's sole responsibility is to its Client and this document does not exonerate parties to a transaction from exercising all their rights and obligations under the transaction documents. This document cannot be reproduced except in full, without prior written approval of the Company. Any unauthorized alteration, forgery or falsification of the content or appearance of this document is unlawful and offenders may be prosecuted to the fullest extent of the law.

Calibration Laboratory of
Schmid & Partner
Engineering AG
Zeughausstrasse 43, 8004 Zurich, Switzerland

S Schweizerischer Kalibrierdienst
C Service suisse d'étalonnage
Servizio svizzero di taratura
S Swiss Calibration Service

Accredited by the Swiss Accreditation Service (SAS)
The Swiss Accreditation Service is one of the signatories to the EA Multilateral Agreement for the recognition of calibration certificates

Accreditation No.: SCS 108

Glossary:

TSL	tissue simulating liquid
ConvF	sensitivity in TSL / NORM x,y,z
N/A	not applicable or not measured

Calibration is Performed According to the Following Standards:

a) IEEE Std 1528-2013, "IEEE Recommended Practice for Determining the Peak Spatial-Averaged Specific Absorption Rate (SAR) in the Human Head from Wireless Communications Devices: Measurement Techniques", June 2013
b) IEC 62209-1, "Procedure to measure the Specific Absorption Rate (SAR) for hand-held devices used in close proximity to the ear (frequency range of 300 MHz to 3 GHz)", February 2005
c) KDB 865664, "SAR Measurement Requirements for 100 MHz to 6 GHz"

Additional Documentation:

d) DASY4/5 System Handbook

Methods Applied and Interpretation of Parameters:

- *Measurement Conditions:* Further details are available from the Validation Report at the end of the certificate. All figures stated in the certificate are valid at the frequency indicated.
- *Antenna Parameters with TSL:* The dipole is mounted with the spacer to position its feed point exactly below the center marking of the flat phantom section, with the arms oriented parallel to the body axis.
- *Feed Point Impedance and Return Loss:* These parameters are measured with the dipole positioned under the liquid filled phantom. The impedance stated is transformed from the measurement at the SMA connector to the feed point. The Return Loss ensures low reflected power. No uncertainty required.
- *Electrical Delay:* One-way delay between the SMA connector and the antenna feed point. No uncertainty required.
- *SAR measured:* SAR measured at the stated antenna input power.
- *SAR normalized:* SAR as measured, normalized to an input power of 1 W at the antenna connector.
- *SAR for nominal TSL parameters:* The measured TSL parameters are used to calculate the nominal SAR result.

The reported uncertainty of measurement is stated as the standard uncertainty of measurement multiplied by the coverage factor k=2, which for a normal distribution corresponds to a coverage probability of approximately 95%.

Unless otherwise stated the results shown in this test report refer only to the sample(s) tested and such sample(s) are retained for 90 days only.
除非另有說明，此報告結果僅對測試之樣品負責，同時此樣品僅保留90天。本報告未經本公司書面許可，不可部份複製。
This document is issued by the Company subject to its General Conditions of Service printed overleaf, available on request or accessible at www.sgs.com/terms_and_conditions.htm and, for electronic format documents, subject to Terms and Conditions for Electronic Documents at www.sgs.com/terms_e-document.htm. Attention is drawn to the limitation of liability, indemnification and jurisdiction issues defined therein. Any holder of this document is advised that information contained hereon reflects the Company's findings at the time of its intervention only and within the limits of Client's instructions, if any. The Company's sole responsibility is to its Client and this document does not exonerate parties to a transaction from exercising all their rights and obligations under the transaction documents. This document cannot be reproduced except in full, without prior written approval of the Company. Any unauthorized alteration, forgery or falsification of the content or appearance of this document is unlawful and offenders may be prosecuted to the fullest extent of the law.

Measurement Conditions

DASY system configuration, as far as not given on page 1.

DASY Version	DASY5	V52.8.7
Extrapolation	Advanced Extrapolation	
Phantom	Modular Flat Phantom	
Distance Dipole Center - TSL	10 mm	with Spacer
Zoom Scan Resolution	dx, dy, dz = 5 mm	
Frequency	2450 MHz ± 1 MHz	

Head TSL parameters

The following parameters and calculations were applied.

	Temperature	Permittivity	Conductivity
Nominal Head TSL parameters	22.0 °C	39.2	1.80 mho/m
Measured Head TSL parameters	(22.0 ± 0.2) °C	39.7 ± 6 %	1.84 mho/m ± 6 %
Head TSL temperature change during test	< 0.5 °C	----	----

SAR result with Head TSL

SAR averaged over 1 cm³ (1 g) of Head TSL	Condition	
SAR measured	250 mW input power	13.3 W/kg
SAR for nominal Head TSL parameters	normalized to 1W	**52.8 W/kg ± 17.0 % (k=2)**

SAR averaged over 10 cm³ (10 g) of Head TSL	condition	
SAR measured	250 mW input power	6.13 W/kg
SAR for nominal Head TSL parameters	normalized to 1W	**24.4 W/kg ± 16.5 % (k=2)**

Body TSL parameters

The following parameters and calculations were applied.

	Temperature	Permittivity	Conductivity
Nominal Body TSL parameters	22.0 °C	52.7	1.95 mho/m
Measured Body TSL parameters	(22.0 ± 0.2) °C	52.1 ± 6 %	2.02 mho/m ± 6 %
Body TSL temperature change during test	< 0.5 °C	----	----

SAR result with Body TSL

SAR averaged over 1 cm³ (1 g) of Body TSL	Condition	
SAR measured	250 mW input power	12.9 W/kg
SAR for nominal Body TSL parameters	normalized to 1W	**50.6 W/kg ± 17.0 % (k=2)**

SAR averaged over 10 cm³ (10 g) of Body TSL	condition	
SAR measured	250 mW input power	5.96 W/kg
SAR for nominal Body TSL parameters	normalized to 1W	**23.6 W/kg ± 16.5 % (k=2)**

Unless otherwise stated the results shown in this test report refer only to the sample(s) tested and such sample(s) are retained for 90 days only.
除非另有說明，此報告結果僅對測試之樣品負責，同時此樣品僅保留90天。本報告未經本公司書面許可，不可部份複製。
This document is issued by the Company subject to its General Conditions of Service printed overleaf, available on request or accessible at www.sgs.com/terms_and_conditions.htm and, for electronic format documents, subject to Terms and Conditions for Electronic Documents at www.sgs.com/terms_e-document.htm. Attention is drawn to the limitation of liability, indemnification and jurisdiction issues defined therein. Any holder of this document is advised that information contained hereon reflects the Company's findings at the time of its intervention only and within the limits of Client's instructions, if any. The Company's sole responsibility is to its Client and this document does not exonerate parties to a transaction from exercising all their rights and obligations under the transaction documents. This document cannot be reproduced except in full, without prior written approval of the Company. Any unauthorized alteration, forgery or falsification of the content or appearance of this document is unlawful and offenders may be prosecuted to the fullest extent of the law.

SGS Taiwan Ltd. 台灣檢驗科技股份有限公司
No.134,Wu Kung Road, New Taipei Industrial Park, Wuku District, New Taipei City, Taiwan 24803/新北市五股區新北產業園區五工路 134 號
t (886-2) 2299-3279 f (886-2) 2298-0488 www.tw.sgs.com
Member of SGS Group

Appendix

Antenna Parameters with Head TSL

Impedance, transformed to feed point	53.5 Ω + 3.5 jΩ
Return Loss	- 26.5 dB

Antenna Parameters with Body TSL

Impedance, transformed to feed point	51.0 Ω + 5.0 jΩ
Return Loss	- 25.9 dB

General Antenna Parameters and Design

Electrical Delay (one direction)	1.161 ns

After long term use with 100W radiated power, only a slight warming of the dipole near the feedpoint can be measured.

The dipole is made of standard semirigid coaxial cable. The center conductor of the feeding line is directly connected to the second arm of the dipole. The antenna is therefore short-circuited for DC-signals. On some of the dipoles, small end caps are added to the dipole arms in order to improve matching when loaded according to the position as explained in the "Measurement Conditions" paragraph. The SAR data are not affected by this change. The overall dipole length is still according to the Standard.
No excessive force must be applied to the dipole arms, because they might bend or the soldered connections near the feedpoint may be damaged.

Additional EUT Data

Manufactured by	SPEAG
Manufactured on	September 26, 2013

Unless otherwise stated the results shown in this test report refer only to the sample(s) tested and such sample(s) are retained for 90 days only.
除非另有說明，此報告結果僅對測試之樣品負責，同時此樣品僅保留90天。本報告未經本公司書面許可，不可部份複製。
This document is issued by the Company subject to its General Conditions of Service printed overleaf, available on request or accessible at www.sgs.com/terms_and_conditions.htm and, for electronic format documents, subject to Terms and Conditions for Electronic Documents at www.sgs.com/terms_e-document.htm. Attention is drawn to the limitation of liability, indemnification and jurisdiction issues defined therein. Any holder of this document is advised that information contained hereon reflects the Company's findings at the time of its intervention only and within the limits of Client's instructions, if any. The Company's sole responsibility is to its Client and this document does not exonerate parties to a transaction from exercising all their rights and obligations under the transaction documents. This document cannot be reproduced except in full, without prior written approval of the Company. Any unauthorized alteration, forgery or falsification of the content or appearance of this document is unlawful and offenders may be prosecuted to the fullest extent of the law.
SGS Taiwan Ltd. 台灣檢驗科技股份有限公司
No.134,Wu Kung Road, New Taipei Industrial Park, Wuku District, New Taipei City, Taiwan 24803/新北市五股區新北產業園區五工路 134 號
t (886-2) 2299-3279 f (886-2) 2298-0488 www.tw.sgs.com
Member of SGS Group

DASY5 Validation Report for Head TSL

Date: 05.11.2013

Test Laboratory: SPEAG, Zurich, Switzerland

DUT: Dipole 2450 MHz; Type: D2450V2; Serial: D2450V2 - SN: 922

Communication System: UID 0 - CW; Frequency: 2450 MHz
Medium parameters used: f = 2450 MHz; σ = 1.84 S/m; ε_r = 39.7; ρ = 1000 kg/m^3
Phantom section: Flat Section
Measurement Standard: DASY5 (IEEE/IEC/ANSI C63.19-2007)

DASY52 Configuration:

- Probe: ES3DV3 - SN3205; ConvF(4.52, 4.52, 4.52); Calibrated: 28.12.2012;
- Sensor-Surface: 3mm (Mechanical Surface Detection)
- Electronics: DAE4 Sn601; Calibrated: 25.04.2013
- Phantom: Flat Phantom 5.0 (front); Type: QD000P50AA; Serial: 1001
- DASY52 52.8.7(1137); SEMCAD X 14.6.10(7164)

Dipole Calibration for Head Tissue/Pin=250 mW, d=10mm/Zoom Scan (7x7x7)/Cube 0:
Measurement grid: dx=5mm, dy=5mm, dz=5mm
Reference Value = 98.82 V/m; Power Drift = 0.07 dB
Peak SAR (extrapolated) = 27.7 W/kg
SAR(1 g) = 13.3 W/kg; SAR(10 g) = 6.13 W/kg
Maximum value of SAR (measured) = 16.8 W/kg

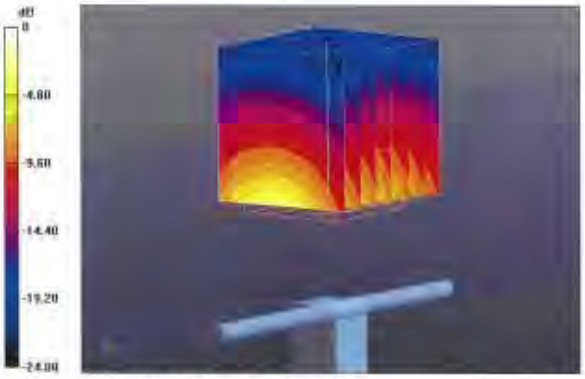

0 dB = 16.8 W/kg = 12.25 dBW/kg

Unless otherwise stated the results shown in this test report refer only to the sample(s) tested and such sample(s) are retained for 90 days only.
除非另有說明，此報告結果僅對測試之樣品負責，同時此樣品僅保留90天。本報告未經本公司書面許可，不可部份複製。
This document is issued by the Company subject to its General Conditions of Service printed overleaf, available on request or accessible at www.sgs.com/terms_and_conditions.htm and, for electronic format documents, subject to Terms and Conditions for Electronic Documents at www.sgs.com/terms_e-document.htm. Attention is drawn to the limitation of liability, indemnification and jurisdiction issues defined therein. Any holder of this document is advised that information contained hereon reflects the Company's findings at the time of its intervention only and within the limits of Client's instructions, if any. The Company's sole responsibility is to its Client and this document does not exonerate parties to a transaction from exercising all their rights and obligations under the transaction documents. This document cannot be reproduced except in full, without prior written approval of the Company. Any unauthorized alteration, forgery or falsification of the content or appearance of this document is unlawful and offenders may be prosecuted to the fullest extent of the law.
SGS Taiwan Ltd. 台灣檢驗科技股份有限公司
No.134,Wu Kung Road, New Taipei Industrial Park, Wuku District, New Taipei City, Taiwan 24803/新北市五股區新北產業園區五工路 134 號
t (886-2) 2299-3279 f (886-2) 2298-0488 www.tw.sgs.com
Member of SGS Group

Impedance Measurement Plot for Head TSL

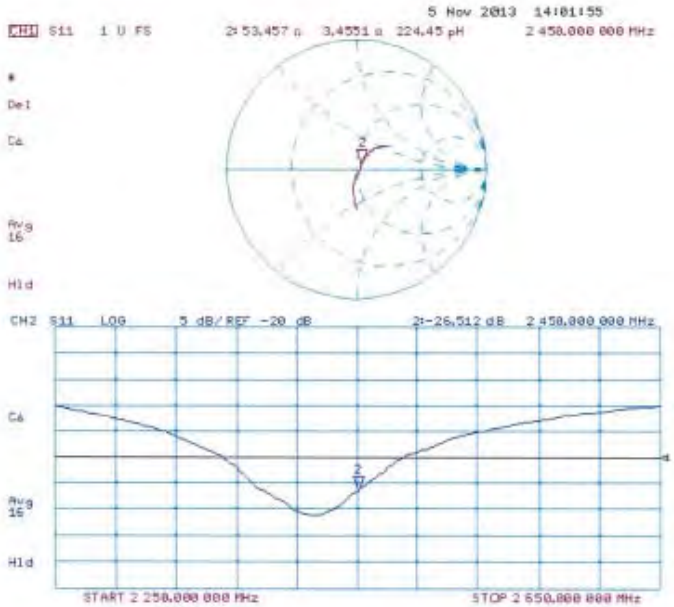

Unless otherwise stated the results shown in this test report refer only to the sample(s) tested and such sample(s) are retained for 90 days only.
除非另有說明，此報告結果僅對測試之樣品負責，同時此樣品僅保留90天。本報告未經本公司書面許可，不可部份複製。

This document is issued by the Company subject to its General Conditions of Service printed overleaf, available on request or accessible at www.sgs.com/terms_and_conditions.htm and, for electronic format documents, subject to Terms and Conditions for Electronic Documents at www.sgs.com/terms_e-document.htm. Attention is drawn to the limitation of liability, indemnification and jurisdiction issues defined therein. Any holder of this document is advised that information contained hereon reflects the Company's findings at the time of its intervention only and within the limits of Client's instructions, if any. The Company's sole responsibility is to its Client and this document does not exonerate parties to a transaction from exercising all their rights and obligations under the transaction documents. This document cannot be reproduced except in full, without prior written approval of the Company. Any unauthorized alteration, forgery or falsification of the content or appearance of this document is unlawful and offenders may be prosecuted to the fullest extent of the law.

SGS Taiwan Ltd. 台灣檢驗科技股份有限公司
No.134,Wu Kung Road, New Taipei Industrial Park, Wuku District, New Taipei City, Taiwan 24803/新北市五股區新北產業園區五工路 134 號
t (886-2) 2299-3279 f (886-2) 2298-0488 www.tw.sgs.com
Member of SGS Group

DASY5 Validation Report for Body TSL

Date: 01.11.2013

Test Laboratory: SPEAG, Zurich, Switzerland

DUT: Dipole 2450 MHz; Type: D2450V2; Serial: D2450V2 - SN: 922

Communication System: UID 0 - CW; Frequency: 2450 MHz
Medium parameters used: f = 2450 MHz; σ = 2.02 S/m; ε_r = 52.1; ρ = 1000 kg/m^3
Phantom section: Flat Section
Measurement Standard: DASY5 (IEEE/IEC/ANSI C63.19-2007)

DASY52 Configuration:

- Probe: ES3DV3 - SN3205; ConvF(4.42, 4.42, 4.42); Calibrated: 28.12.2012;
- Sensor-Surface: 3mm (Mechanical Surface Detection)
- Electronics: DAE4 Sn601; Calibrated: 25.04.2013
- Phantom: Flat Phantom 5.0 (back); Type: QD000P50AA; Serial: 1002
- DASY52 52.8.7(1137); SEMCAD X 14.6.10(7164)

Dipole Calibration for Body Tissue/Pin=250 mW, d=10mm/Zoom Scan (7x7x7)/Cube 0:
Measurement grid: dx=5mm, dy=5mm, dz=5mm
Reference Value = 94.218 V/m; Power Drift = 0.02 dB
Peak SAR (extrapolated) = 27.0 W/kg
SAR(1 g) = 12.9 W/kg; SAR(10 g) = 5.96 W/kg
Maximum value of SAR (measured) = 16.9 W/kg

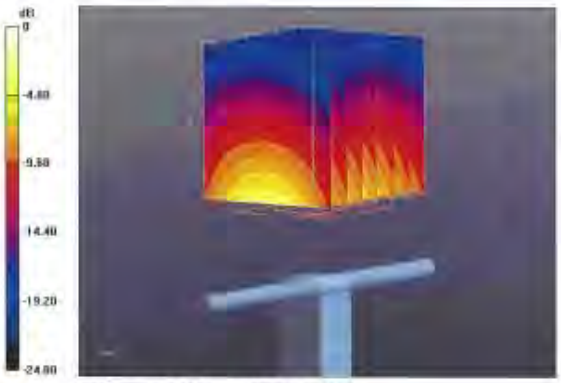

0 dB = 16.9 W/kg = 12.28 dBW/kg

Unless otherwise stated the results shown in this test report refer only to the sample(s) tested and such sample(s) are retained for 90 days only.
除非另有說明，此報告結果僅對測試之樣品負責，同時此樣品僅保留90天。本報告未經本公司書面許可，不可部份複製。
This document is issued by the Company subject to its General Conditions of Service printed overleaf, available on request or accessible at www.sgs.com/terms_and_conditions.htm and, for electronic format documents, subject to Terms and Conditions for Electronic Documents at www.sgs.com/terms_e-document.htm. Attention is drawn to the limitation of liability, indemnification and jurisdiction issues defined therein. Any holder of this document is advised that information contained hereon reflects the Company's findings at the time of its intervention only and within the limits of Client's instructions, if any. The Company's sole responsibility is to its Client and this document does not exonerate parties to a transaction from exercising all their rights and obligations under the transaction documents. This document cannot be reproduced except in full, without prior written approval of the Company. Any unauthorized alteration, forgery or falsification of the content or appearance of this document is unlawful and offenders may be prosecuted to the fullest extent of the law.
SGS Taiwan Ltd. 台灣檢驗科技股份有限公司
No.134,Wu Kung Road, New Taipei Industrial Park, Wuku District, New Taipei City, Taiwan 24803/新北市五股區新北產業園區五工路 134 號
t (886-2) 2299-3279 f (886-2) 2298-0488 www.tw.sgs.com
Member of SGS Group

Impedance Measurement Plot for Body TSL

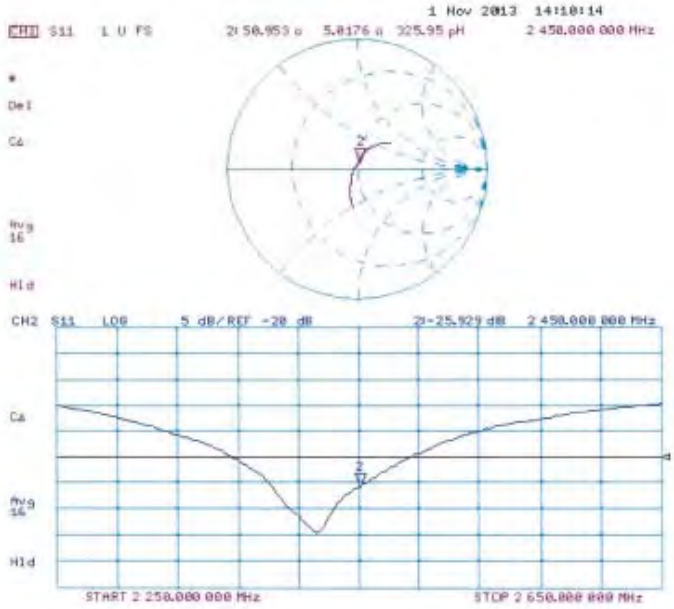

- End of 1st part of report -

Unless otherwise stated the results shown in this test report refer only to the sample(s) tested and such sample(s) are retained for 90 days only.
除非另有說明，此報告結果僅對測試之樣品負責，同時此樣品僅保留90天。本報告未經本公司書面許可，不可部份複製。

This document is issued by the Company subject to its General Conditions of Service printed overleaf, available on request or accessible at www.sgs.com/terms_and_conditions.htm and, for electronic format documents, subject to Terms and Conditions for Electronic Documents at www.sgs.com/terms_e-document.htm. Attention is drawn to the limitation of liability, indemnification and jurisdiction issues defined therein. Any holder of this document is advised that information contained hereon reflects the Company's findings at the time of its intervention only and within the limits of Client's instructions, if any. The Company's sole responsibility is to its Client and this document does not exonerate parties to a transaction from exercising all their rights and obligations under the transaction documents. This document cannot be reproduced except in full, without prior written approval of the Company. Any unauthorized alteration, forgery or falsification of the content or appearance of this document is unlawful and offenders may be prosecuted to the fullest extent of the law.

SGS Taiwan Ltd. 台灣檢驗科技股份有限公司
No.134,Wu Kung Road, New Taipei Industrial Park, Wuku District, New Taipei City, Taiwan 24803/新北市五股區新北產業園區五工路 134 號
t (886-2) 2299-3279 f (886-2) 2298-0488 www.tw.sgs.com
Member of SGS Group