System Check_Head_750MHz

DUT: D750V3-1107

Communication System: CW ; Frequency: 750 MHz;Duty Cycle: 1:1
Medium: HSL_750_201004 Medium parameters used: f = 750 MHz; σ = 0.903 S/m; ε_r = 40.956; ρ = 1000 kg/m^3
Ambient Temperature：23.6 ℃; Liquid Temperature：22.6 ℃

DASY5 Configuration:
- Probe: EX3DV4 - SN3873; ConvF(9.79, 9.79, 9.79) @ 750 MHz; Calibrated: 2020/8/27
- Sensor-Surface: 1.4mm (Mechanical Surface Detection)
- Electronics: DAE4 Sn778; Calibrated: 2020/6/4
- Phantom: ELI v5.0; Type: QDOVA002AA; Serial: 1131
- Measurement SW: DASY52, Version 52.10 (4);SEMCAD X Version 14.6.14 (7483)

Pin=250mW/Area Scan (61x61x1): Interpolated grid: dx=1.500 mm, dy=1.500 mm
Maximum value of SAR (interpolated) = 2.89 W/kg

Pin=250mW/Zoom Scan (5x5x7)/Cube 0: Measurement grid: dx=8mm, dy=8mm, dz=5mm
Reference Value = 59.07 V/m; Power Drift = -0.18 dB
Peak SAR (extrapolated) = 3.08 W/kg
SAR(1 g) = 2.17 W/kg; SAR(10 g) = 1.49 W/kg
Maximum value of SAR (measured) = 2.79 W/kg

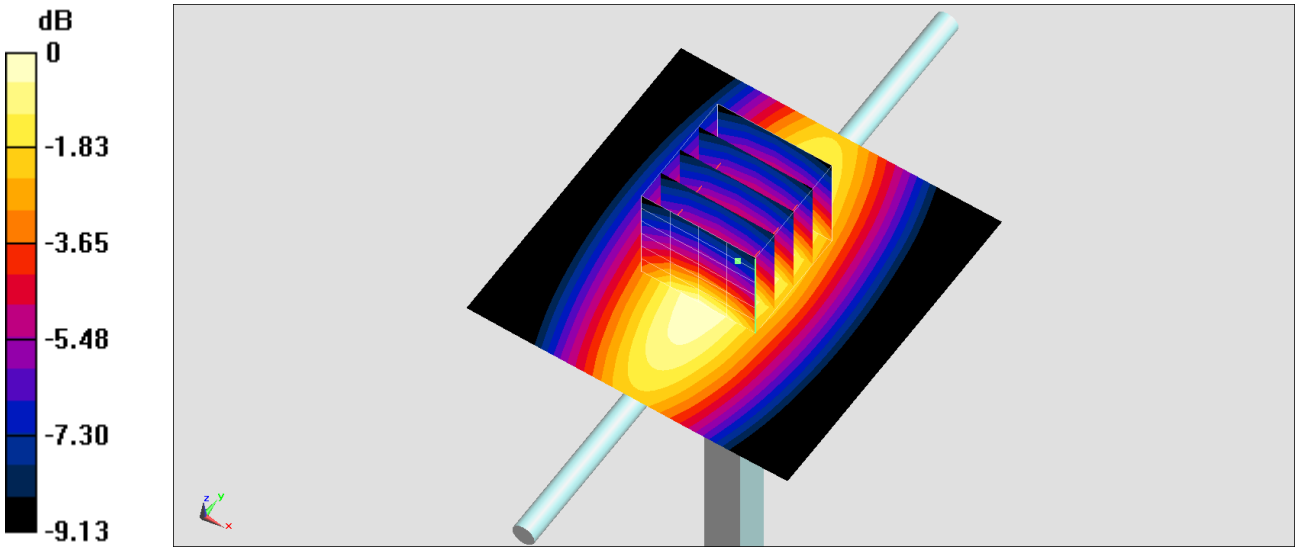

0 dB = 2.79 W/kg = 4.46 dBW/kg

System Check_Head_750MHz

DUT: D750V3-1107

Communication System: CW ; Frequency: 750 MHz;Duty Cycle: 1:1
Medium: HSL_750_201005 Medium parameters used: f = 750 MHz; σ = 0.904 S/m; ε_r = 40.966; ρ = 1000 kg/m^3
Ambient Temperature：23.4 ℃; Liquid Temperature：22.4 ℃

DASY5 Configuration:
- Probe: EX3DV4 - SN3873; ConvF(9.79, 9.79, 9.79) @ 750 MHz; Calibrated: 2020/8/27
- Sensor-Surface: 1.4mm (Mechanical Surface Detection)
- Electronics: DAE4 Sn778; Calibrated: 2020/6/4
- Phantom: ELI v5.0; Type: QDOVA002AA; Serial: 1131
- Measurement SW: DASY52, Version 52.10 (4);SEMCAD X Version 14.6.14 (7483)

Pin=250mW/Area Scan (61x61x1): Interpolated grid: dx=1.500 mm, dy=1.500 mm
Maximum value of SAR (interpolated) = 2.97 W/kg

Pin=250mW/Zoom Scan (5x5x7)/Cube 0: Measurement grid: dx=8mm, dy=8mm, dz=5mm
Reference Value = 59.07 V/m; Power Drift = -0.14 dB
Peak SAR (extrapolated) = 3.29 W/kg
SAR(1 g) = 2.19 W/kg; SAR(10 g) = 1.53 W/kg
Maximum value of SAR (measured) = 2.88 W/kg

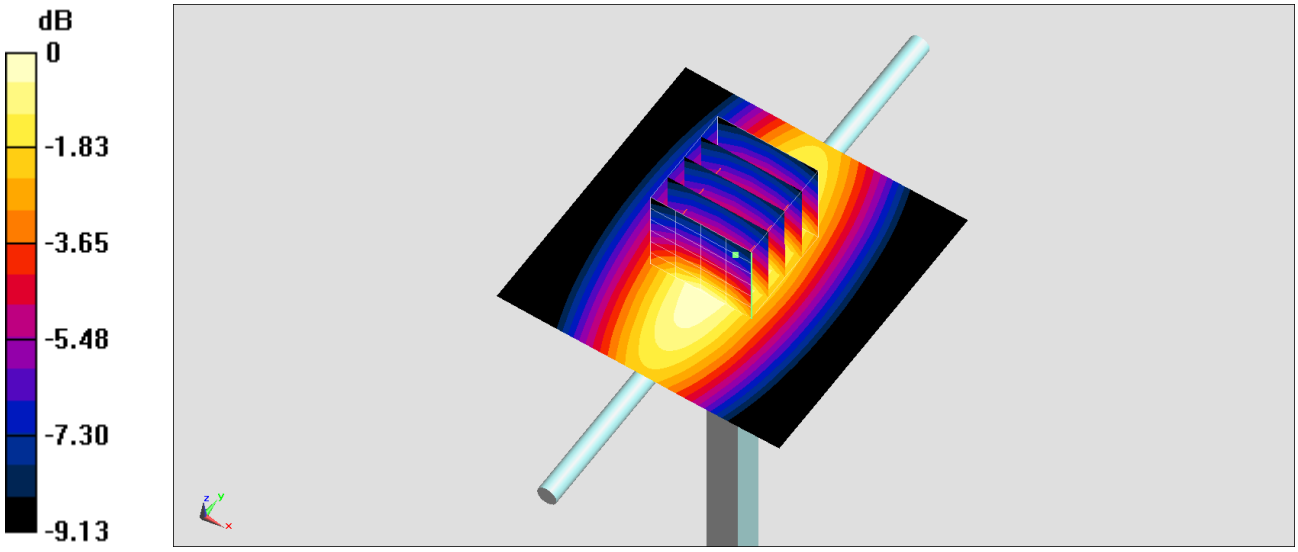

0 dB = 2.88 W/kg = 4.59 dBW/kg

System Check_Head_750MHz

DUT: D750V3-1107

Communication System: CW ; Frequency: 750 MHz;Duty Cycle: 1:1
Medium: HSL_750_201006 Medium parameters used: f = 750 MHz; σ = 0.889 S/m; ε_r = 40.306; ρ = 1000 kg/m^3
Ambient Temperature：23.3 ℃; Liquid Temperature：22.3 ℃

DASY5 Configuration:
- Probe: EX3DV4 - SN3873; ConvF(9.79, 9.79, 9.79) @ 750 MHz; Calibrated: 2020/8/27
- Sensor-Surface: 1.4mm (Mechanical Surface Detection)
- Electronics: DAE4 Sn778; Calibrated: 2020/6/4
- Phantom: ELI v5.0; Type: QDOVA002AA; Serial: 1131
- Measurement SW: DASY52, Version 52.10 (4);SEMCAD X Version 14.6.14 (7483)

Pin=250mW/Area Scan (61x61x1): Interpolated grid: dx=1.500 mm, dy=1.500 mm
Maximum value of SAR (interpolated) = 2.85 W/kg

Pin=250mW/Zoom Scan (5x5x7)/Cube 0: Measurement grid: dx=8mm, dy=8mm, dz=5mm
Reference Value = 59.07 V/m; Power Drift = -0.10 dB
Peak SAR (extrapolated) = 3.03 W/kg
SAR(1 g) = 2.13 W/kg; SAR(10 g) = 1.47 W/kg
Maximum value of SAR (measured) = 2.74 W/kg

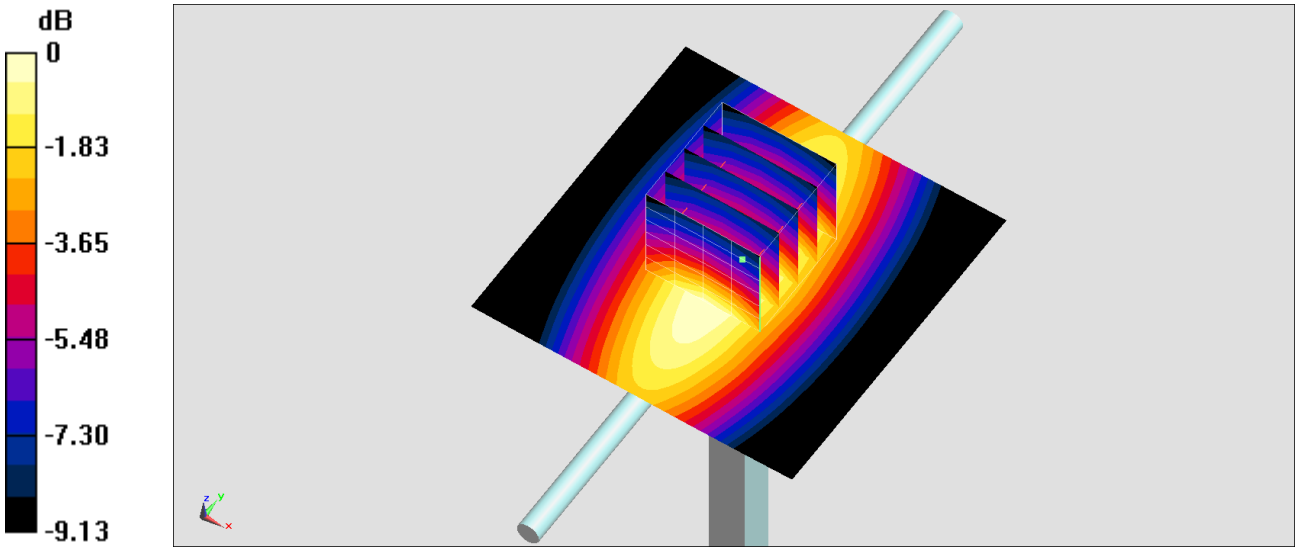

0 dB = 2.74 W/kg = 4.38 dBW/kg

System Check_Head_835MHz

DUT: D835V2-4d167

Communication System: CW; Frequency: 835 MHz;Duty Cycle: 1:1
Medium: HSL_850_201004 Medium parameters used: f = 835 MHz; σ = 0.883 S/m; ε_r = 41.2; ρ = 1000 kg/m^3
Ambient Temperature：23.6 ℃; Liquid Temperature：22.6 ℃

DASY5 Configuration:
- Probe: EX3DV4 - SN3873; ConvF(9.46, 9.46, 9.46) @ 835 MHz; Calibrated: 2020/8/27
- Sensor-Surface: 1.4mm (Mechanical Surface Detection)
- Electronics: DAE4 Sn778; Calibrated: 2020/6/4
- Phantom: ELI v5.0; Type: QDOVA002AA; Serial: 1131
- Measurement SW: DASY52, Version 52.10 (4);SEMCAD X Version 14.6.14 (7483)

Pin=250mW/Area Scan (61x61x1): Interpolated grid: dx=1.500 mm, dy=1.500 mm
Maximum value of SAR (interpolated) = 3.23 W/kg

Pin=250mW/Zoom Scan (5x5x7)/Cube 0: Measurement grid: dx=8mm, dy=8mm, dz=5mm
Reference Value = 61.74 V/m; Power Drift = -0.02 dB
Peak SAR (extrapolated) = 3.59 W/kg
SAR(1 g) = 2.42 W/kg; SAR(10 g) = 1.63 W/kg
Maximum value of SAR (measured) = 3.15 W/kg

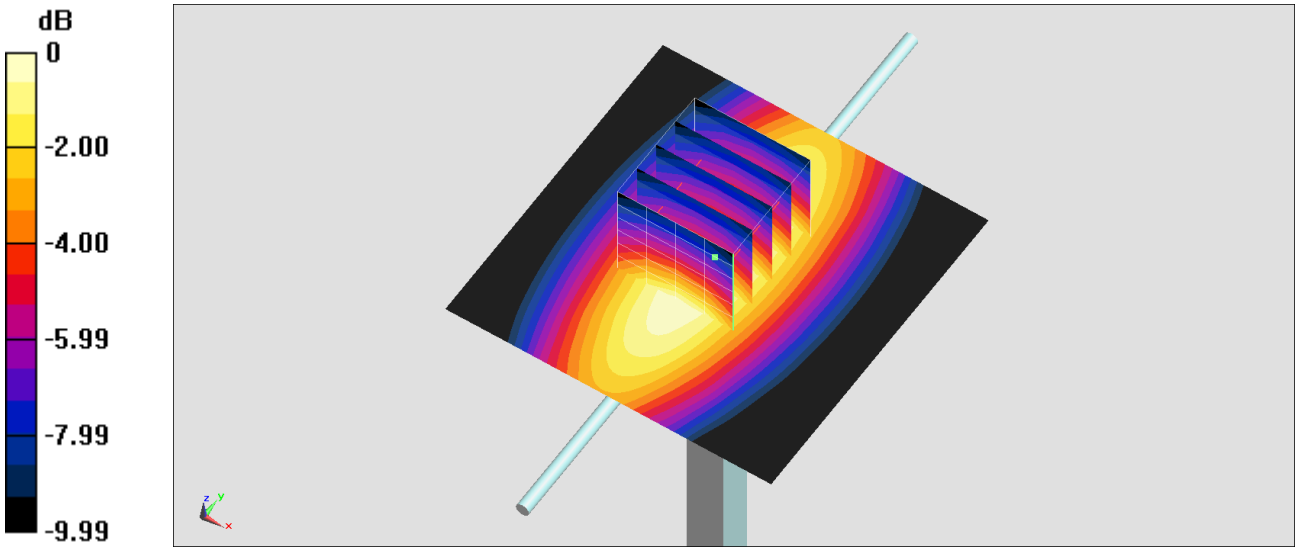

0 dB = 3.15 W/kg = 4.98 dBW/kg

System Check_Head_835MHz

DUT: D835V2-4d167

Communication System: CW; Frequency: 835 MHz;Duty Cycle: 1:1
Medium: HSL_850_201006 Medium parameters used: f = 835 MHz; σ = 0.894 S/m; ε_r = 42.27; ρ = 1000 kg/m^3
Ambient Temperature：23.3 ℃; Liquid Temperature：22.3 ℃

DASY5 Configuration:
- Probe: EX3DV4 - SN3873; ConvF(9.46, 9.46, 9.46) @ 835 MHz; Calibrated: 2020/8/27
- Sensor-Surface: 1.4mm (Mechanical Surface Detection)
- Electronics: DAE4 Sn778; Calibrated: 2020/6/4
- Phantom: ELI v5.0; Type: QDOVA002AA; Serial: 1131
- Measurement SW: DASY52, Version 52.10 (4);SEMCAD X Version 14.6.14 (7483)

Pin=250mW/Area Scan (61x61x1): Interpolated grid: dx=1.500 mm, dy=1.500 mm
Maximum value of SAR (interpolated) = 2.86 W/kg

Pin=250mW/Zoom Scan (5x5x7)/Cube 0: Measurement grid: dx=8mm, dy=8mm, dz=5mm
Reference Value = 57.12 V/m; Power Drift = -0.00 dB
Peak SAR (extrapolated) = 3.33 W/kg
SAR(1 g) = 2.26 W/kg; SAR(10 g) = 1.5 W/kg
Maximum value of SAR (measured) = 2.83 W/kg

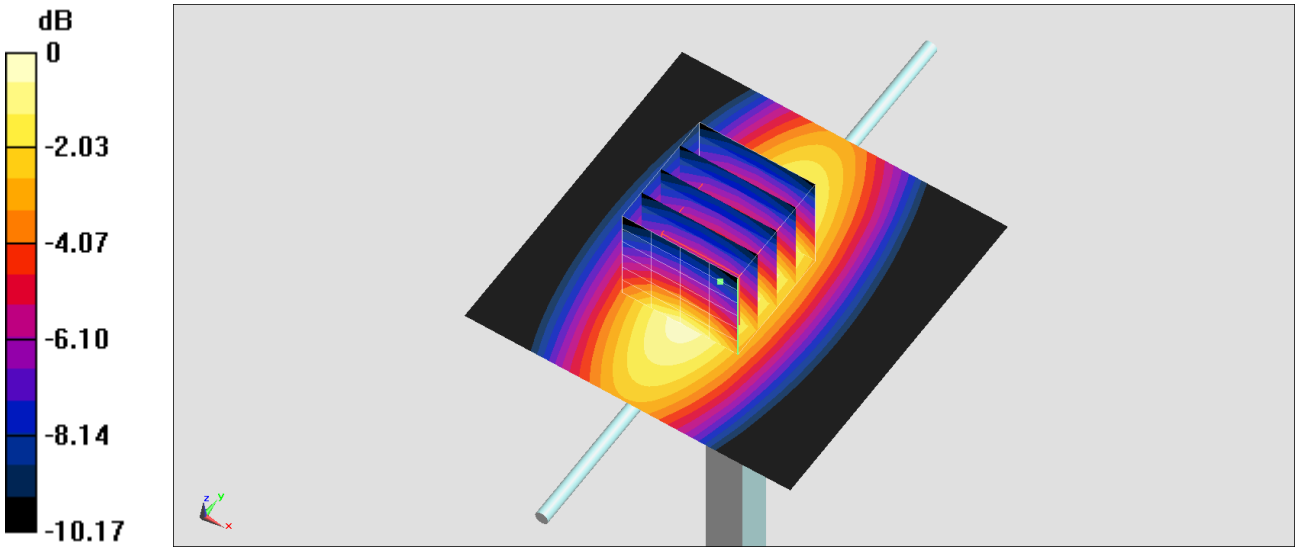

0 dB = 2.83 W/kg = 4.52 dBW/kg

System Check_Head_835MHz

DUT: D835V2-4d167

Communication System: CW ; Frequency: 835 MHz;Duty Cycle: 1:1
Medium: HSL_835_201022 Medium parameters used: f = 835 MHz; σ = 0.901 S/m; ε_r = 42.474; ρ = 1000 kg/m^3
Ambient Temperature：23.4 ℃; Liquid Temperature：22.4 ℃

DASY5 Configuration:
- Probe: EX3DV4 - SN3753; ConvF(9.44, 9.44, 9.44) @ 835 MHz; Calibrated: 2020/6/25
- Sensor-Surface: 1.4mm (Mechanical Surface Detection)
- Electronics: DAE4 Sn778; Calibrated: 2020/6/4
- Phantom: SAM_Right; Type: SAM; Serial: TP:1446
- Measurement SW: DASY52, Version 52.10 (4);SEMCAD X Version 14.6.14 (7483)

Pin=50mW/Area Scan (61x61x1): Interpolated grid: dx=1.500 mm, dy=1.500 mm
Maximum value of SAR (interpolated) = 0.617 W/kg

Pin=50mW/Zoom Scan (5x5x7)/Cube 0: Measurement grid: dx=8mm, dy=8mm, dz=5mm
Reference Value = 27.58 V/m; Power Drift = -0.07 dB
Peak SAR (extrapolated) = 0.683 W/kg
SAR(1 g) = 0.467 W/kg; SAR(10 g) = 0.312 W/kg
Maximum value of SAR (measured) = 0.612 W/kg

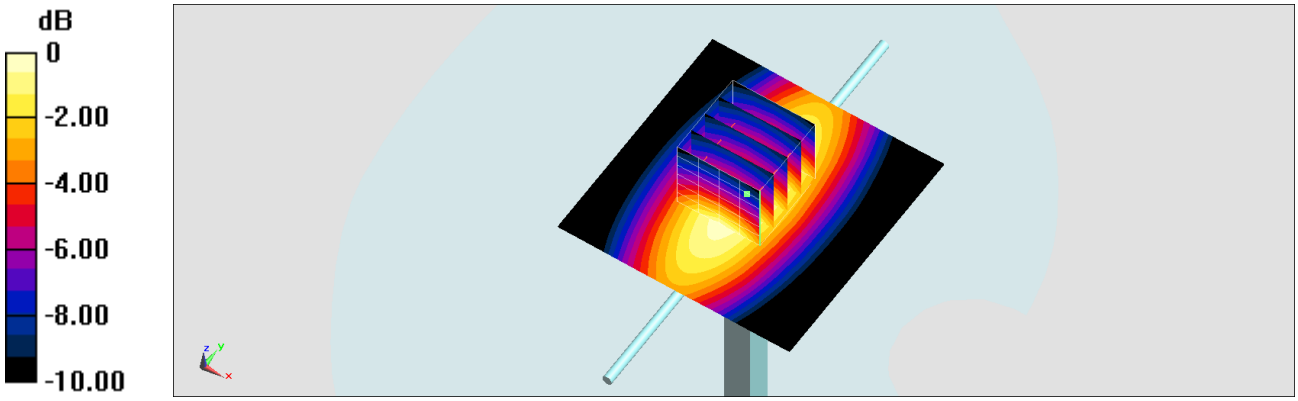

0 dB = 0.612 W/kg = -2.13 dBW/kg

System Check_Head_1750MHz

DUT: D1750V2-1112

Communication System: CW ; Frequency: 1750 MHz;Duty Cycle: 1:1
Medium: HSL_1750_201001 Medium parameters used: f = 1750 MHz; σ = 1.361 S/m; ε_r = 40.492; ρ = 1000 kg/m^3
Ambient Temperature：23.5 ℃; Liquid Temperature：22.5 ℃

DASY5 Configuration:
- Probe: EX3DV4 - SN3873; ConvF(8.17, 8.17, 8.17) @ 1750 MHz; Calibrated: 2020/8/27
- Sensor-Surface: 1.4mm (Mechanical Surface Detection)
- Electronics: DAE4 Sn778; Calibrated: 2020/6/4
- Phantom: ELI v5.0; Type: QDOVA002AA; Serial: 1131
- Measurement SW: DASY52, Version 52.10 (4);SEMCAD X Version 14.6.14 (7483)

Pin=250mW/Area Scan (61x61x1): Interpolated grid: dx=1.500 mm, dy=1.500 mm
Maximum value of SAR (interpolated) = 12.6 W/kg

Pin=250mW/Zoom Scan (5x5x7)/Cube 0: Measurement grid: dx=8mm, dy=8mm, dz=5mm
Reference Value = 96.63 V/m; Power Drift = -0.08 dB
Peak SAR (extrapolated) = 15.3 W/kg
SAR(1 g) = 9.14 W/kg; SAR(10 g) = 5.14 W/kg
Maximum value of SAR (measured) = 12.2 W/kg

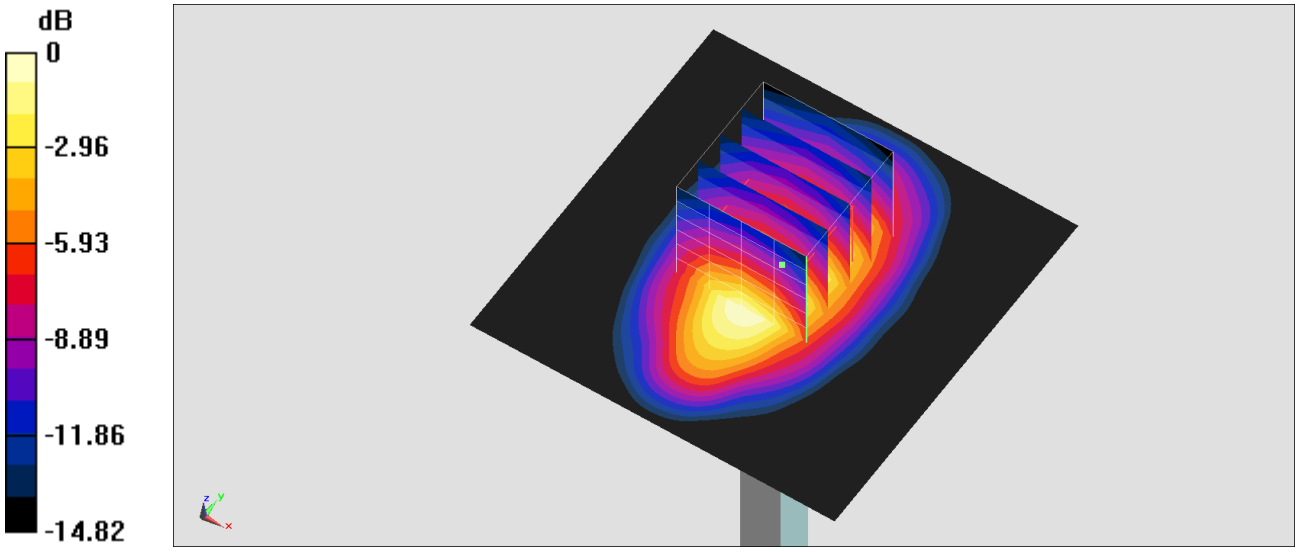

0 dB = 12.2 W/kg = 10.86 dBW/kg

System Check_Head_1750MHz

DUT: D1750V2-1112

Communication System: CW ; Frequency: 1750 MHz;Duty Cycle: 1:1
Medium: HSL_1750_201003 Medium parameters used: f = 1750 MHz; σ = 1.357 S/m; ε_r = 40.774; ρ = 1000 kg/m^3
Ambient Temperature：23.2 ℃; Liquid Temperature：22.2 ℃

DASY5 Configuration:
- Probe: EX3DV4 - SN3873; ConvF(8.17, 8.17, 8.17) @ 1750 MHz; Calibrated: 2020/8/27
- Sensor-Surface: 1.4mm (Mechanical Surface Detection)
- Electronics: DAE4 Sn778; Calibrated: 2020/6/4
- Phantom: ELI v5.0; Type: QDOVA002AA; Serial: 1131
- Measurement SW: DASY52, Version 52.10 (4);SEMCAD X Version 14.6.14 (7483)

Pin=250mW/Area Scan (61x61x1): Interpolated grid: dx=1.500 mm, dy=1.500 mm
Maximum value of SAR (interpolated) = 12.6 W/kg

Pin=250mW/Zoom Scan (5x5x7)/Cube 0: Measurement grid: dx=8mm, dy=8mm, dz=5mm
Reference Value = 96.63 V/m; Power Drift = -0.08 dB
Peak SAR (extrapolated) = 15.3 W/kg
SAR(1 g) = 9.11 W/kg; SAR(10 g) = 5.12 W/kg
Maximum value of SAR (measured) = 12.1 W/kg

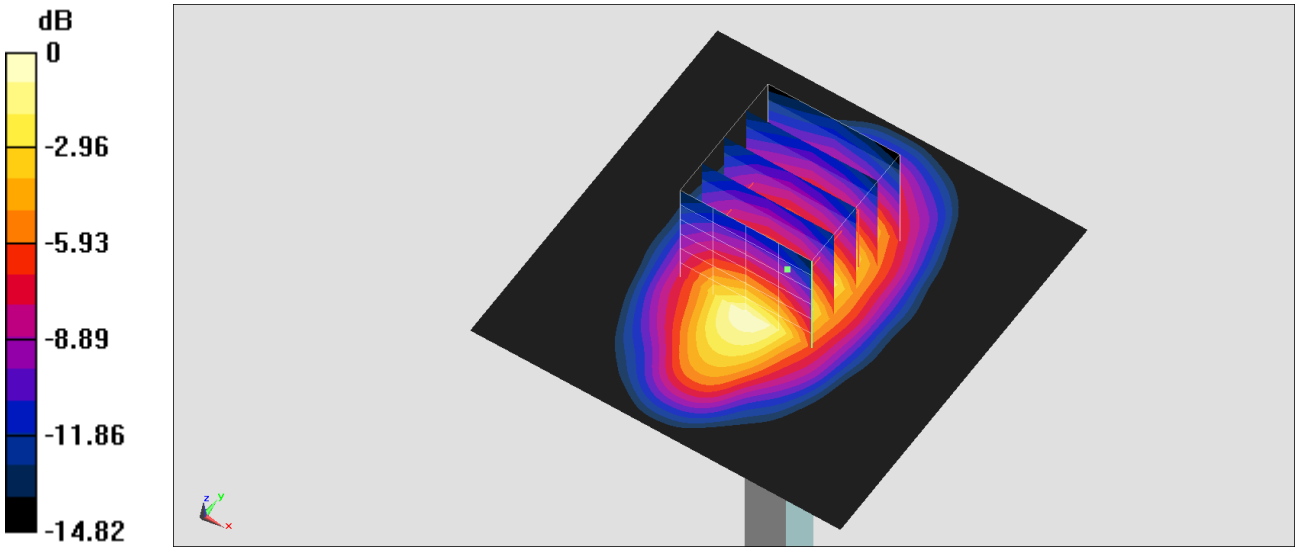

0 dB = 12.1 W/kg = 10.83 dBW/kg

System Check_Head_1750MHz

DUT: D1750V2-1112

Communication System: CW ; Frequency: 1750 MHz;Duty Cycle: 1:1
Medium: HSL_1750_201007 Medium parameters used: f = 1750 MHz; σ = 1.389 S/m; ε_r = 41.369; ρ = 1000 kg/m^3
Ambient Temperature：23.5 ℃; Liquid Temperature：22.5 ℃

DASY5 Configuration:
- Probe: EX3DV4 - SN3873; ConvF(8.17, 8.17, 8.17) @ 1750 MHz; Calibrated: 2020/8/27
- Sensor-Surface: 1.4mm (Mechanical Surface Detection)
- Electronics: DAE4 Sn778; Calibrated: 2020/6/4
- Phantom: ELI v5.0; Type: QDOVA002AA; Serial: 1131
- Measurement SW: DASY52, Version 52.10 (4);SEMCAD X Version 14.6.14 (7483)

Pin=250mW/Area Scan (61x61x1): Interpolated grid: dx=1.500 mm, dy=1.500 mm
Maximum value of SAR (interpolated) = 12.9 W/kg

Pin=250mW/Zoom Scan (5x5x7)/Cube 0: Measurement grid: dx=8mm, dy=8mm, dz=5mm
Reference Value = 96.63 V/m; Power Drift = -0.11 dB
Peak SAR (extrapolated) = 15.6 W/kg
SAR(1 g) = 9.33 W/kg; SAR(10 g) = 5.24 W/kg
Maximum value of SAR (measured) = 12.4 W/kg

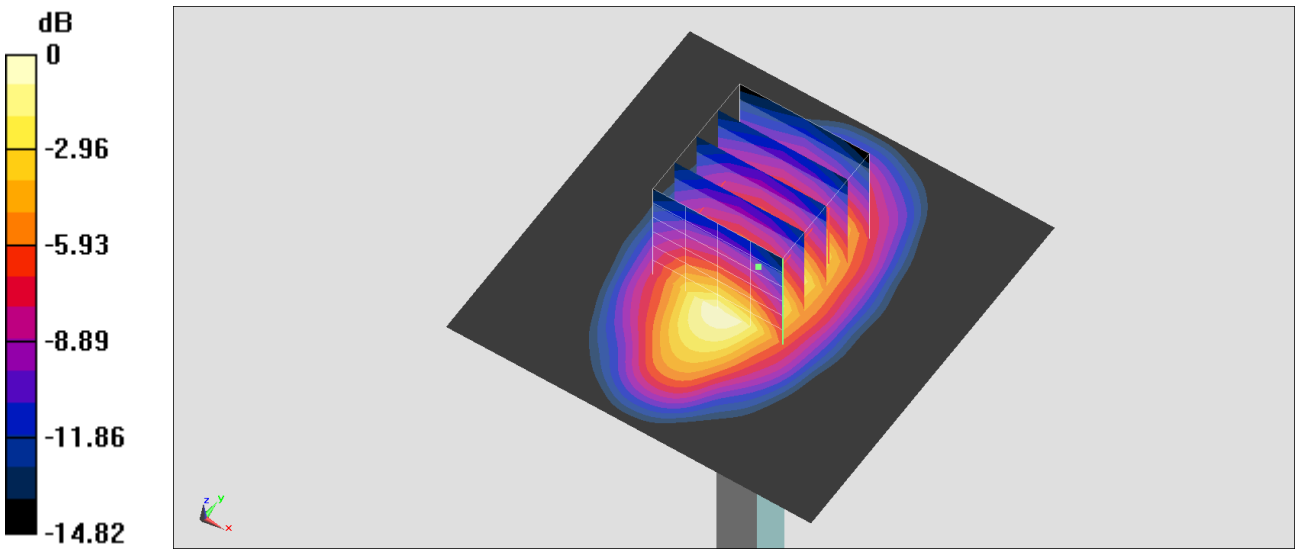

0 dB = 12.4 W/kg = 10.93 dBW/kg

System Check_Head_1750MHz

DUT: D1750V2-1112

Communication System: CW; Frequency: 1750 MHz;Duty Cycle: 1:1
Medium: HSL_1750_201015 Medium parameters used: f = 1750 MHz; σ = 1.338 S/m; ε_r = 39.73; ρ = 1000 kg/m^3
Ambient Temperature：23.3 ℃; Liquid Temperature：22.3 ℃

DASY5 Configuration:
- Probe: ES3DV3 - SN3115; ConvF(5.23, 5.23, 5.23) @ 1750 MHz; Calibrated: 2020/1/3
- Sensor-Surface: 3mm (Mechanical Surface Detection)
- Electronics: DAE4 Sn778; Calibrated: 2020/6/4
- Phantom: ELI v5.0; Type: QDOVA002AA; Serial: 1131
- Measurement SW: DASY52, Version 52.10 (4);SEMCAD X Version 14.6.14 (7483)

Pin=50mW/Area Scan (61x61x1): Interpolated grid: dx=1.500 mm, dy=1.500 mm
Maximum value of SAR (interpolated) = 2.37 W/kg

Pin=50mW/Zoom Scan (5x5x7)/Cube 0: Measurement grid: dx=8mm, dy=8mm, dz=5mm
Reference Value = 43.02 V/m; Power Drift = -0.12 dB
Peak SAR (extrapolated) = 3.18 W/kg
SAR(1 g) = 1.86 W/kg; SAR(10 g) = 1.02 W/kg
Maximum value of SAR (measured) = 2.26 W/kg

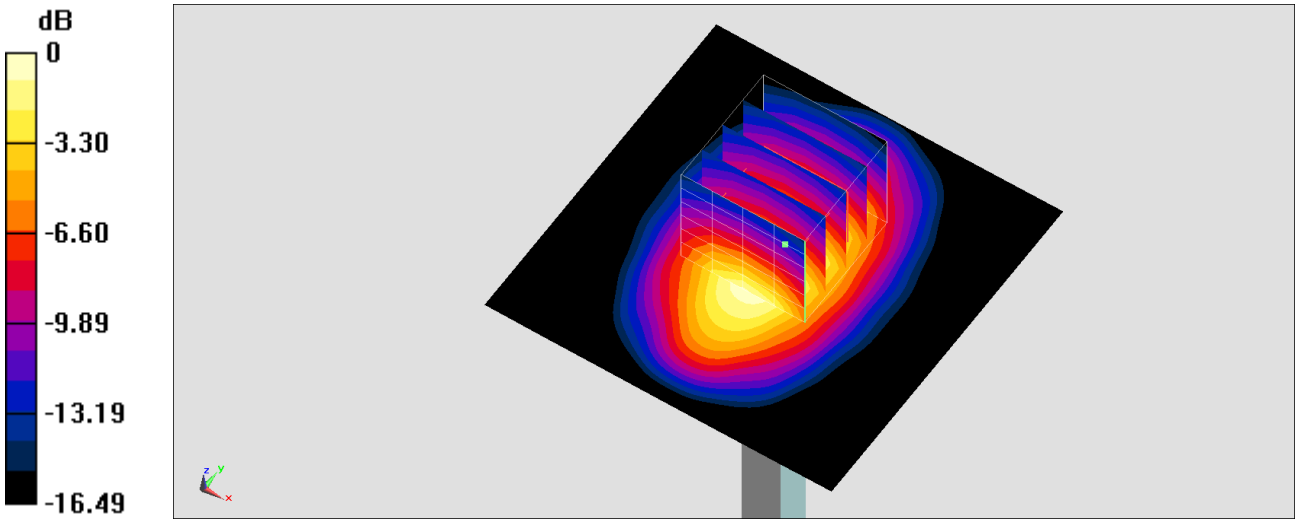

0 dB = 2.26 W/kg = 3.54 dBW/kg

System Check_Head_1750MHz

DUT: D1750V2-1112

Communication System: CW; Frequency: 1750 MHz;Duty Cycle: 1:1
Medium: HSL_1750_201022 Medium parameters used: f = 1750 MHz; σ = 1.360 S/m; ε_r = 40.491; ρ = 1000 kg/m^3
Ambient Temperature：23.4 ℃; Liquid Temperature：22.4 ℃

DASY5 Configuration:
- Probe: EX3DV4 - SN3753; ConvF(8.25, 8.25, 8.25) @ 1750 MHz; Calibrated: 2020/6/25
- Sensor-Surface: 1.4mm (Mechanical Surface Detection)
- Electronics: DAE4 Sn778; Calibrated: 2020/6/4
- Phantom: SAM_Right; Type: SAM; Serial: TP:1446
- Measurement SW: DASY52, Version 52.10 (4);SEMCAD X Version 14.6.14 (7483)

Pin=50mW/Area Scan (61x61x1): Interpolated grid: dx=1.500 mm, dy=1.500 mm
Maximum value of SAR (interpolated) = 2.80 W/kg

Pin=50mW/Zoom Scan (5x5x7)/Cube 0: Measurement grid: dx=8mm, dy=8mm, dz=5mm
Reference Value = 45.72 V/m; Power Drift = -0.06 dB
Peak SAR (extrapolated) = 3.18 W/kg
SAR(1 g) = 1.77 W/kg; SAR(10 g) = 0.976 W/kg
Maximum value of SAR (measured) = 2.66 W/kg

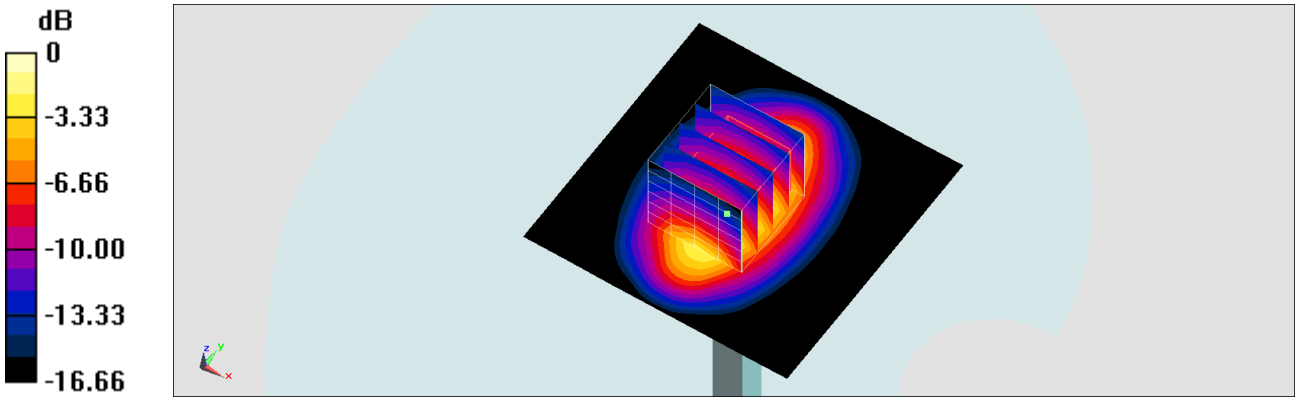

0 dB = 2.66 W/kg = 4.25 dBW/kg

System Check_Head_1900MHz

DUT: D1900V2-5d185

Communication System: CW ; Frequency: 1900 MHz;Duty Cycle: 1:1
Medium: HSL_1900_201001 Medium parameters used: f = 1900 MHz; σ = 1.416 S/m; ε_r = 38.866; ρ = 1000 kg/m^3
Ambient Temperature：23.5 ℃; Liquid Temperature：22.5 ℃

DASY5 Configuration:
- Probe: EX3DV4 - SN3873; ConvF(7.94, 7.94, 7.94) @ 1900 MHz; Calibrated: 2020/8/27
- Sensor-Surface: 1.4mm (Mechanical Surface Detection)
- Electronics: DAE4 Sn778; Calibrated: 2020/6/4
- Phantom: ELI v5.0; Type: QDOVA002AA; Serial: 1131
- Measurement SW: DASY52, Version 52.10 (4);SEMCAD X Version 14.6.14 (7483)

Pin=250mW/Area Scan (61x61x1): Interpolated grid: dx=1.500 mm, dy=1.500 mm
Maximum value of SAR (interpolated) = 15.9 W/kg

Pin=250mW/Zoom Scan (5x5x7)/Cube 0: Measurement grid: dx=8mm, dy=8mm, dz=5mm
Reference Value = 107.3 V/m; Power Drift = -0.06 dB
Peak SAR (extrapolated) = 18.2 W/kg
SAR(1 g) = 9.92 W/kg; SAR(10 g) = 5.24 W/kg
Maximum value of SAR (measured) = 15.2 W/kg

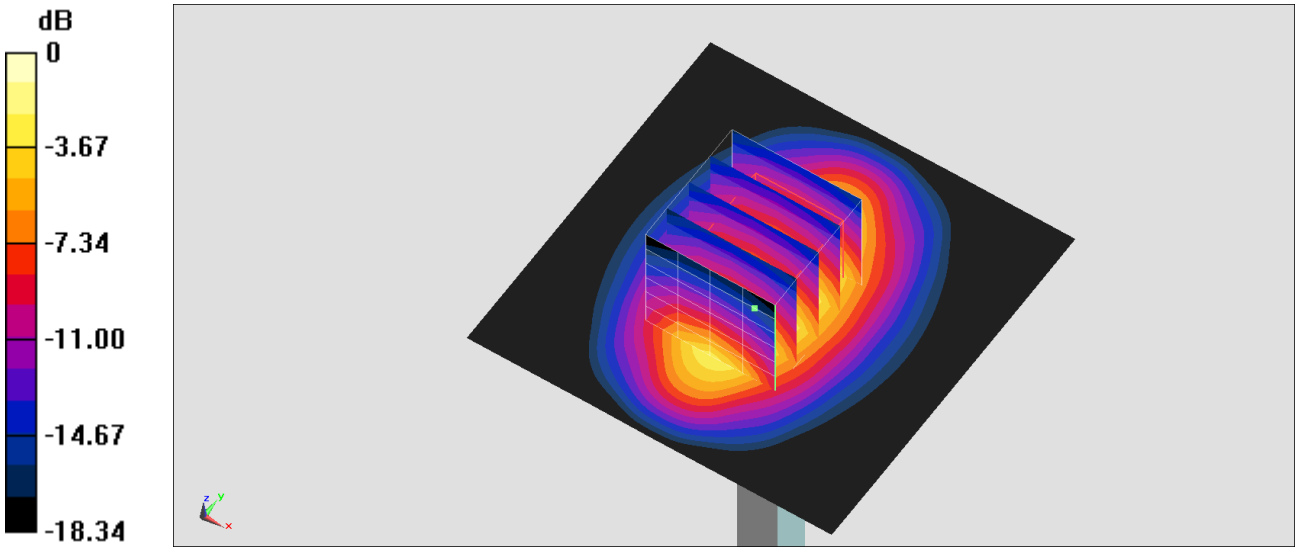

0 dB = 15.2 W/kg = 11.82 dBW/kg

System Check_Head_1900MHz

DUT: D1900V2-5d185

Communication System: CW ; Frequency: 1900 MHz;Duty Cycle: 1:1
Medium: HSL_1900_201003 Medium parameters used: f = 1900 MHz; σ = 1.393 S/m; ε_r = 40.514; ρ = 1000 kg/m^3
Ambient Temperature：23.2 ℃; Liquid Temperature：22.2 ℃

DASY5 Configuration:
- Probe: EX3DV4 - SN3873; ConvF(7.94, 7.94, 7.94) @ 1900 MHz; Calibrated: 2020/8/27
- Sensor-Surface: 1.4mm (Mechanical Surface Detection)
- Electronics: DAE4 Sn778; Calibrated: 2020/6/4
- Phantom: ELI v5.0; Type: QDOVA002AA; Serial: 1131
- Measurement SW: DASY52, Version 52.10 (4);SEMCAD X Version 14.6.14 (7483)

Pin=250mW/Area Scan (61x61x1): Interpolated grid: dx=1.500 mm, dy=1.500 mm
Maximum value of SAR (interpolated) = 14.1 W/kg

Pin=250mW/Zoom Scan (5x5x7)/Cube 0: Measurement grid: dx=8mm, dy=8mm, dz=5mm
Reference Value = 101.7 V/m; Power Drift = -0.03 dB
Peak SAR (extrapolated) = 15.8 W/kg
SAR(1 g) = 9.23 W/kg; SAR(10 g) = 5.07 W/kg
Maximum value of SAR (measured) = 13.5 W/kg

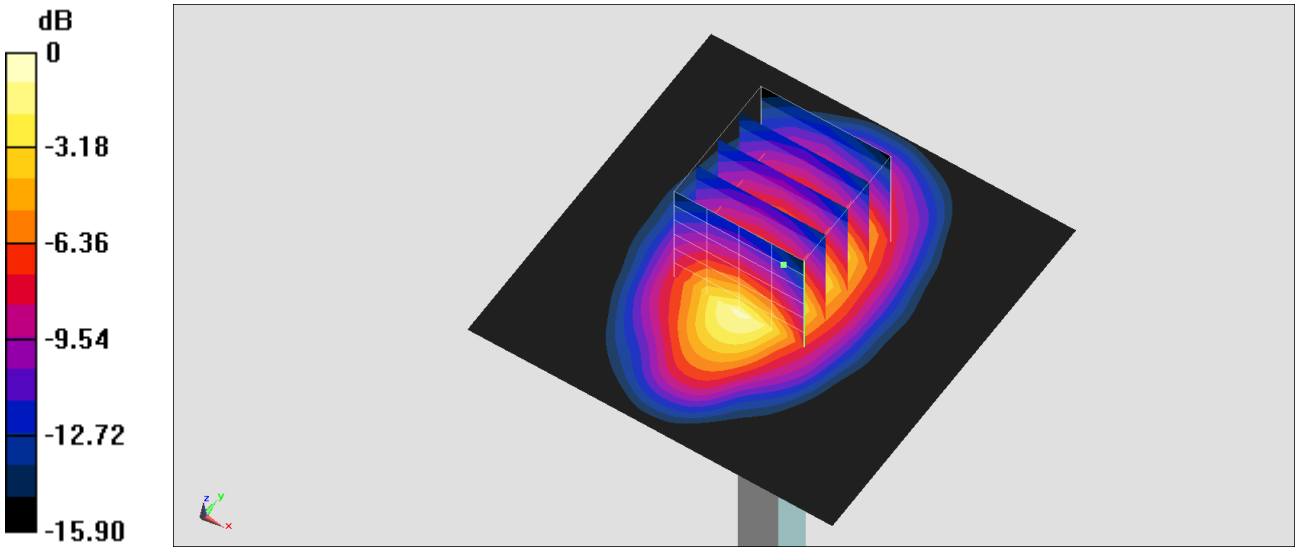

0 dB = 13.5 W/kg = 11.30 dBW/kg

System Check_Head_1900MHz

DUT: D1900V2-5d185

Communication System: CW ; Frequency: 1900 MHz;Duty Cycle: 1:1
Medium: HSL_1900_201007 Medium parameters used: f = 1900 MHz; σ = 1.415 S/m; ε_r = 38.865; ρ = 1000 kg/m^3
Ambient Temperature：23.5 ℃; Liquid Temperature：22.5 ℃

DASY5 Configuration:
- Probe: EX3DV4 - SN3873; ConvF(7.94, 7.94, 7.94) @ 1900 MHz; Calibrated: 2020/8/27
- Sensor-Surface: 1.4mm (Mechanical Surface Detection)
- Electronics: DAE4 Sn778; Calibrated: 2020/6/4
- Phantom: ELI v5.0; Type: QDOVA002AA; Serial: 1131
- Measurement SW: DASY52, Version 52.10 (4);SEMCAD X Version 14.6.14 (7483)

Pin=250mW/Area Scan (61x61x1): Interpolated grid: dx=1.500 mm, dy=1.500 mm
Maximum value of SAR (interpolated) = 14.3 W/kg

Pin=250mW/Zoom Scan (5x5x7)/Cube 0: Measurement grid: dx=8mm, dy=8mm, dz=5mm
Reference Value = 101.7 V/m; Power Drift = -0.03 dB
Peak SAR (extrapolated) = 16.0 W/kg
SAR(1 g) = 9.32 W/kg; SAR(10 g) = 5.15 W/kg
Maximum value of SAR (measured) = 13.7 W/kg

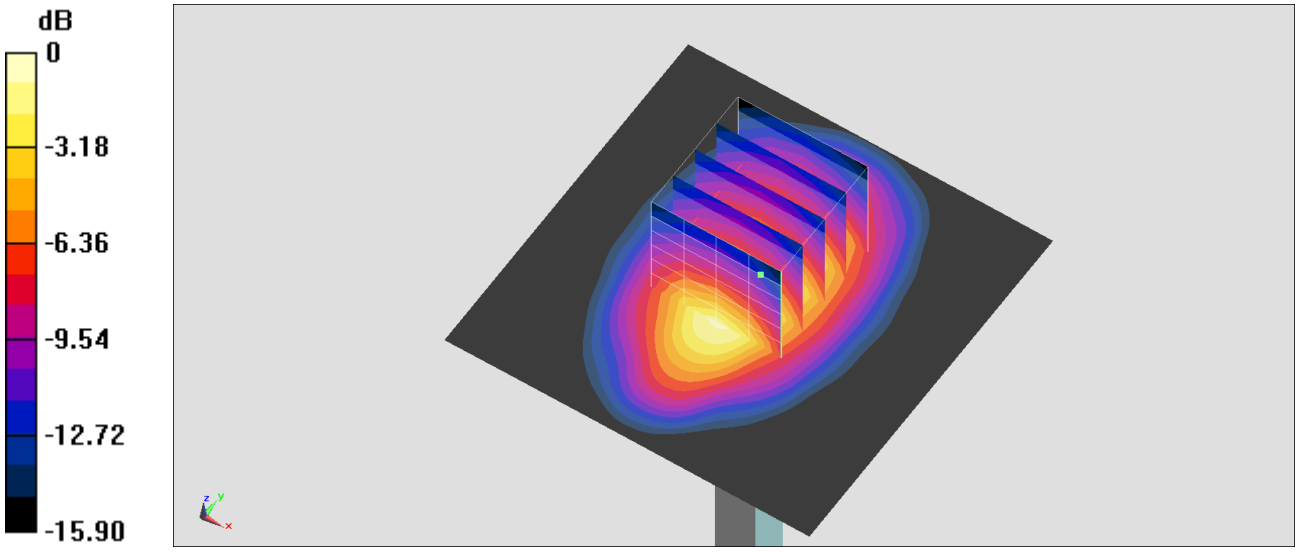

0 dB = 13.7 W/kg = 11.37 dBW/kg

System Check_Head_1900MHz

DUT: D1900V2-5d185

Communication System: CW ; Frequency: 1900 MHz;Duty Cycle: 1:1
Medium: HSL_1900_201015 Medium parameters used: f = 1900 MHz; σ = 1.423 S/m; ε_r = 41.882; ρ = 1000 kg/m^3
Ambient Temperature：23.3 ℃; Liquid Temperature：22.3 ℃

DASY5 Configuration:
- Probe: ES3DV3 - SN3115; ConvF(5.08, 5.08, 5.08) @ 1900 MHz; Calibrated: 2020/1/3
- Sensor-Surface: 3mm (Mechanical Surface Detection)
- Electronics: DAE4 Sn778; Calibrated: 2020/6/4
- Phantom: ELI v5.0; Type: QDOVA002AA; Serial: 1131
- Measurement SW: DASY52, Version 52.10 (4);SEMCAD X Version 14.6.14 (7483)

Pin=50mW/Area Scan (61x61x1): Interpolated grid: dx=1.500 mm, dy=1.500 mm
Maximum value of SAR (interpolated) = 2.58 W/kg

Pin=50mW/Zoom Scan (5x5x7)/Cube 0: Measurement grid: dx=8mm, dy=8mm, dz=5mm
Reference Value = 43.36 V/m; Power Drift = -0.06 dB
Peak SAR (extrapolated) = 3.64 W/kg
SAR(1 g) = 1.97 W/kg; SAR(10 g) = 1.02 W/kg
Maximum value of SAR (measured) = 2.49 W/kg

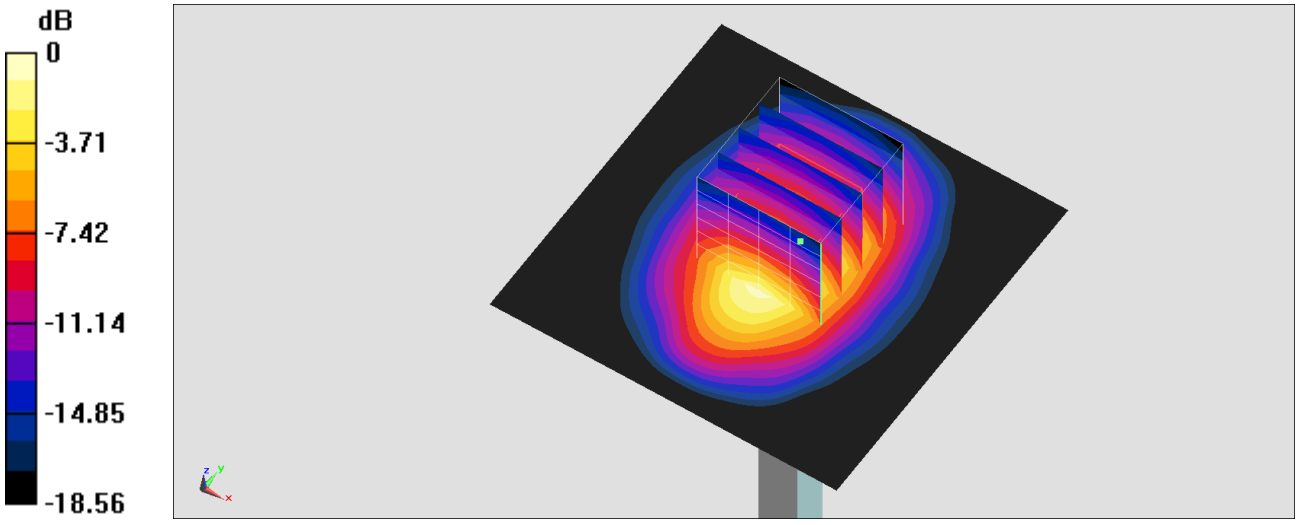

0 dB = 2.49 W/kg = 3.96 dBW/kg

System Check_Head_2300MHz

DUT: D2300V2-1006

Communication System: CW ; Frequency: 2300 MHz;Duty Cycle: 1:1
Medium: HSL_2300_201005 Medium parameters used: f = 2300 MHz; σ = 1.632 S/m; ε_r = 40.14; ρ = 1000 kg/m^3
Ambient Temperature：23.4 ℃; Liquid Temperature：22.4 ℃

DASY5 Configuration:
- Probe: EX3DV4 - SN3873; ConvF(7.57, 7.57, 7.57) @ 2300 MHz; Calibrated: 2020/8/27
- Sensor-Surface: 1.4mm (Mechanical Surface Detection)
- Electronics: DAE4 Sn778; Calibrated: 2020/6/4
- Phantom: ELI v5.0; Type: QDOVA002AA; Serial: 1131
- Measurement SW: DASY52, Version 52.10 (4);SEMCAD X Version 14.6.14 (7483)

Pin=50mW/Area Scan (71x71x1): Interpolated grid: dx=1.200 mm, dy=1.200 mm
Maximum value of SAR (interpolated) = 4.35 W/kg

Pin=50mW/Zoom Scan (7x7x7)/Cube 0: Measurement grid: dx=5mm, dy=5mm, dz=5mm
Reference Value = 60.67 V/m; Power Drift = -0.01 dB
Peak SAR (extrapolated) = 6.3 W/kg
SAR(1 g) = 2.60 W/kg; SAR(10 g) = 1.10 W/kg
Maximum value of SAR (measured) = 4.19 W/kg

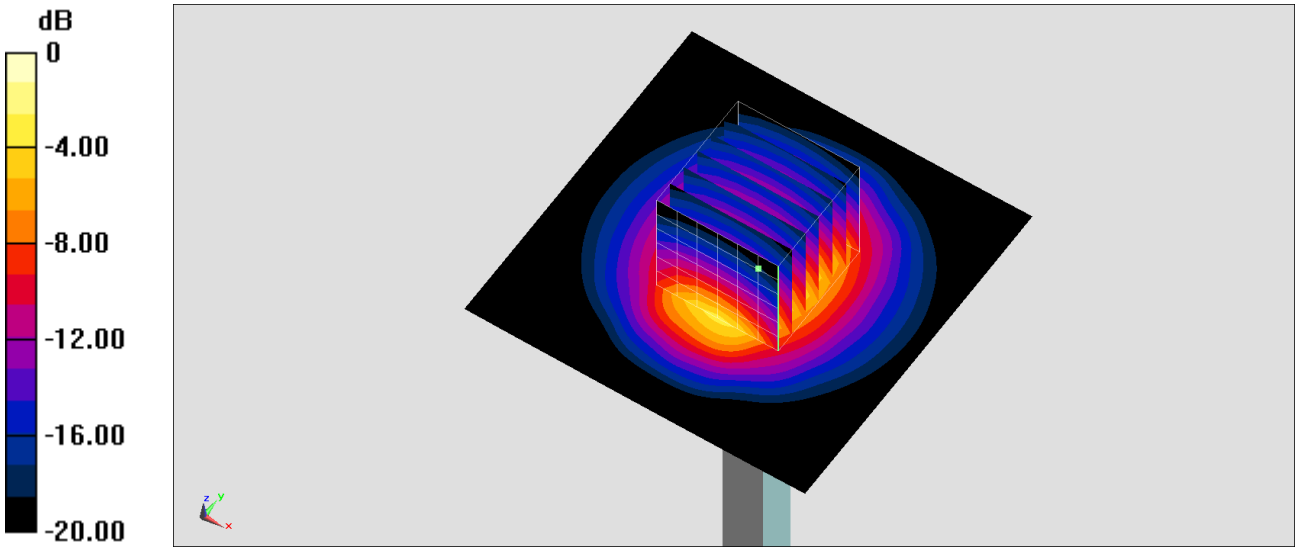

0 dB = 4.19 W/kg = 6.92 dBW/kg

System Check_Head_2600MHz

DUT: D2600V2-1078

Communication System: CW; Frequency: 2600 MHz;Duty Cycle: 1:1
Medium: HSL_2600_201002 Medium parameters used: f = 2600 MHz; σ = 1.964 S/m; ε_r = 39.381; ρ = 1000 kg/m^3
Ambient Temperature：23.4 ℃; Liquid Temperature：22.4 ℃

DASY5 Configuration:
- Probe: EX3DV4 - SN3873; ConvF(7.18, 7.18, 7.18) @ 2600 MHz; Calibrated: 2020/8/27
- Sensor-Surface: 1.4mm (Mechanical Surface Detection)
- Electronics: DAE4 Sn778; Calibrated: 2020/6/4
- Phantom: ELI v5.0; Type: QDOVA002AA; Serial: 1131
- Measurement SW: DASY52, Version 52.10 (4);SEMCAD X Version 14.6.14 (7483)

Pin=50mW/Area Scan (71x71x1): Interpolated grid: dx=1.200 mm, dy=1.200 mm
Maximum value of SAR (interpolated) = 4.05 W/kg

Pin=50mW/Zoom Scan (7x7x7)/Cube 0: Measurement grid: dx=5mm, dy=5mm, dz=5mm
Reference Value = 62.30 V/m; Power Drift = -0.06 dB
Peak SAR (extrapolated) = 6.25 W/kg
SAR(1 g) = 2.89 W/kg; SAR(10 g) = 1.34 W/kg
Maximum value of SAR (measured) = 3.77 W/kg

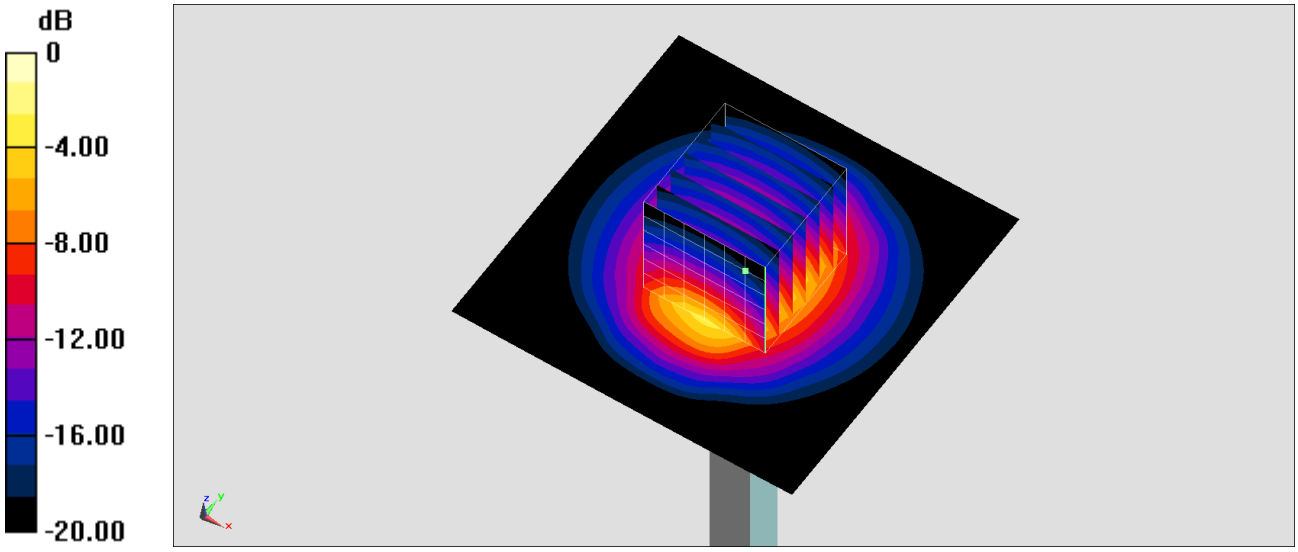

0 dB = 3.77 W/kg = 11.54 dBW/kg

System Check_Head_2600MHz

DUT: D2600V2-1078

Communication System: CW; Frequency: 2600 MHz;Duty Cycle: 1:1
Medium: HSL_2600_201008 Medium parameters used: f = 2600 MHz; σ = 1.947 S/m; ε_r = 40.203; ρ = 1000 kg/m^3
Ambient Temperature：23.2 ℃; Liquid Temperature：22.2 ℃

DASY5 Configuration:
- Probe: EX3DV4 - SN3873; ConvF(7.18, 7.18, 7.18) @ 2600 MHz; Calibrated: 2020/8/27
- Sensor-Surface: 1.4mm (Mechanical Surface Detection)
- Electronics: DAE4 Sn778; Calibrated: 2020/6/4
- Phantom: ELI v5.0; Type: QDOVA002AA; Serial: 1131
- Measurement SW: DASY52, Version 52.10 (4);SEMCAD X Version 14.6.14 (7483)

Pin=250mW/Area Scan (61x61x1): Interpolated grid: dx=1.200 mm, dy=1.200 mm
Maximum value of SAR (interpolated) = 22.7 W/kg

Pin=250mW/Zoom Scan (7x7x7)/Cube 0: Measurement grid: dx=5mm, dy=5mm, dz=5mm
Reference Value = 103.8 V/m; Power Drift = -0.01 dB
Peak SAR (extrapolated) = 28.0 W/kg
SAR(1 g) = 13.5 W/kg; SAR(10 g) = 6.25 W/kg
Maximum value of SAR (measured) = 22.5 W/kg

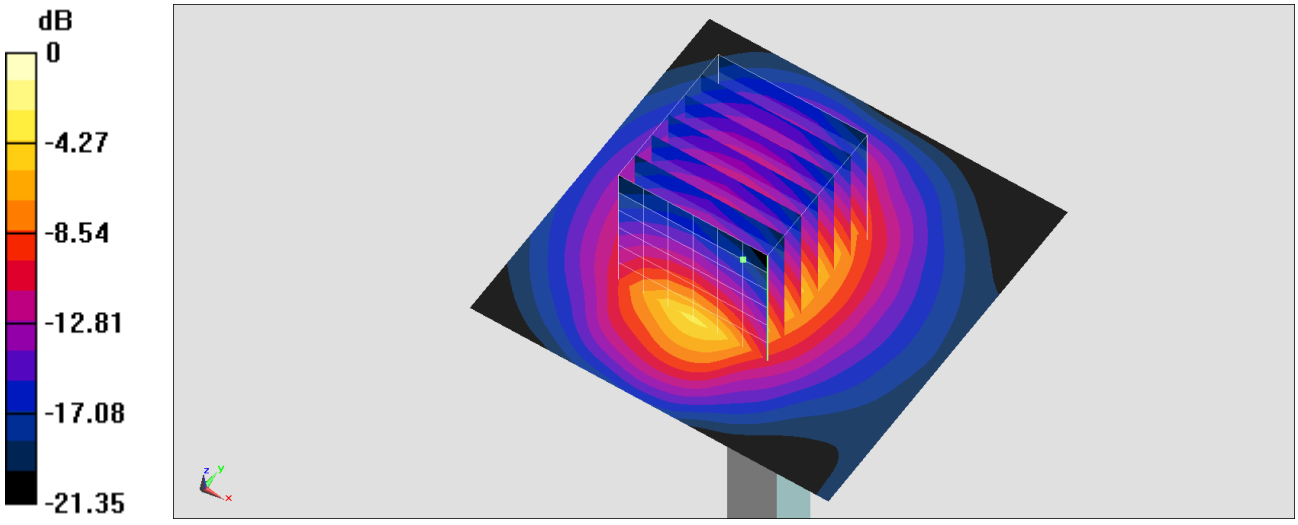

0 dB = 22.5 W/kg = 13.52 dBW/kg

System Check_Head_2600MHz

DUT: D2600V2-1078

Communication System: CW; Frequency: 2600 MHz;Duty Cycle: 1:1
Medium: HSL_2600_201015 Medium parameters used: f = 2600 MHz; σ = 1.963 S/m; ε_r = 38.891; ρ = 1000 kg/m^3
Ambient Temperature：23.5 ℃; Liquid Temperature：22.5 ℃

DASY5 Configuration:
- Probe: ES3DV3 - SN3115; ConvF(4.44, 4.44, 4.44) @ 2600 MHz; Calibrated: 2020/1/3
- Sensor-Surface: 3mm (Mechanical Surface Detection)
- Electronics: DAE4 Sn778; Calibrated: 2020/6/4
- Phantom: ELI v5.0; Type: QDOVA002AA; Serial: 1131
- Measurement SW: DASY52, Version 52.10 (4);SEMCAD X Version 14.6.14 (7483)

Pin=50mW/Area Scan (71x71x1): Interpolated grid: dx=1.200 mm, dy=1.200 mm
Maximum value of SAR (interpolated) = 3.77 W/kg

Pin=50mW/Zoom Scan (7x7x7)/Cube 0: Measurement grid: dx=5mm, dy=5mm, dz=5mm
Reference Value = 44.99 V/m; Power Drift = -0.09 dB
Peak SAR (extrapolated) = 6.02 W/kg
SAR(1 g) = 2.73 W/kg; SAR(10 g) = 1.22 W/kg
Maximum value of SAR (measured) = 3.68 W/kg

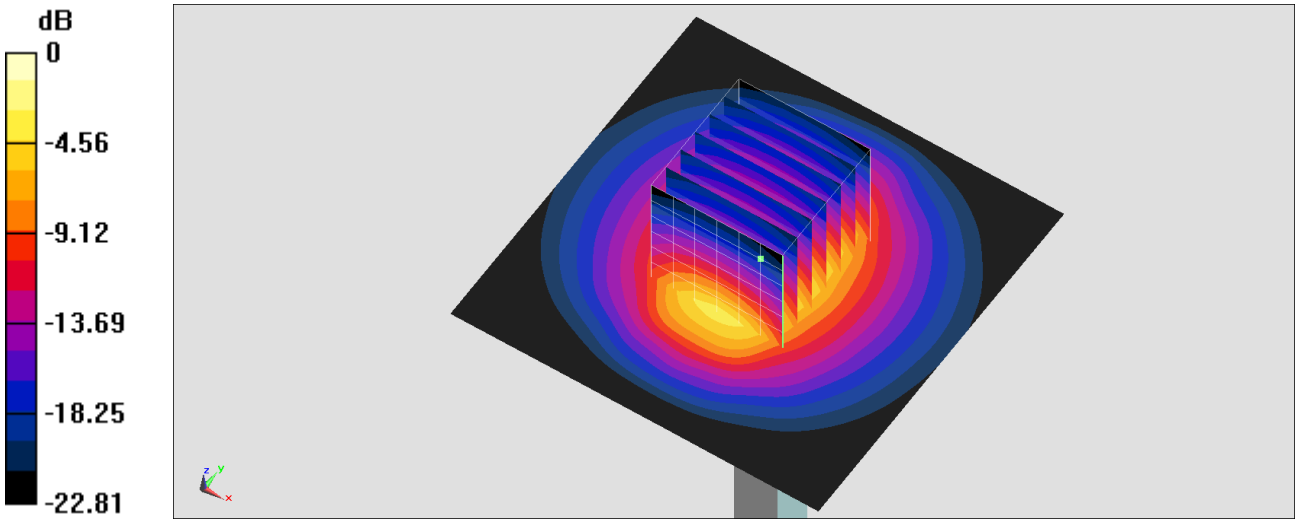

0 dB = 3.68 W/kg = 5.66 dBW/kg

System Check_Head_3500MHz

DUT: D3500V2-1014

Communication System: CW; Frequency: 3500 MHz;Duty Cycle: 1:1
Medium: HSL_3500_201016 Medium parameters used: f = 3500 MHz; σ = 2.994 S/m; ε_r = 38.417; ρ = 1000 kg/m^3
Ambient Temperature：23.5 ℃; Liquid Temperature：22.5 ℃

DASY5 Configuration:
- Probe: EX3DV4 - SN3753; ConvF(6.8, 6.8, 6.8) @ 3500 MHz; Calibrated: 2020/6/25
- Sensor-Surface: 1.4mm (Mechanical Surface Detection)
- Electronics: DAE4 Sn854; Calibrated: 2020/5/26
- Phantom: ELI v5.0; Type: QDOVA002AA; Serial: 1131
- Measurement SW: DASY52, Version 52.10 (4);SEMCAD X Version 14.6.14 (7483)

Pin=100mW/Area Scan (71x71x1): Interpolated grid: dx=1.200 mm, dy=1.200 mm
Maximum value of SAR (interpolated) = 11.6 W/kg

Pin=100mW/Zoom Scan (7x7x7)/Cube 0: Measurement grid: dx=5mm, dy=5mm, dz=1.4mm
Reference Value = 59.61 V/m; Power Drift = 0.07 dB
Peak SAR (extrapolated) = 15.6 W/kg
SAR(1 g) = 6.13 W/kg; SAR(10 g) = 2.35 W/kg
Maximum value of SAR (measured) = 11.7 W/kg

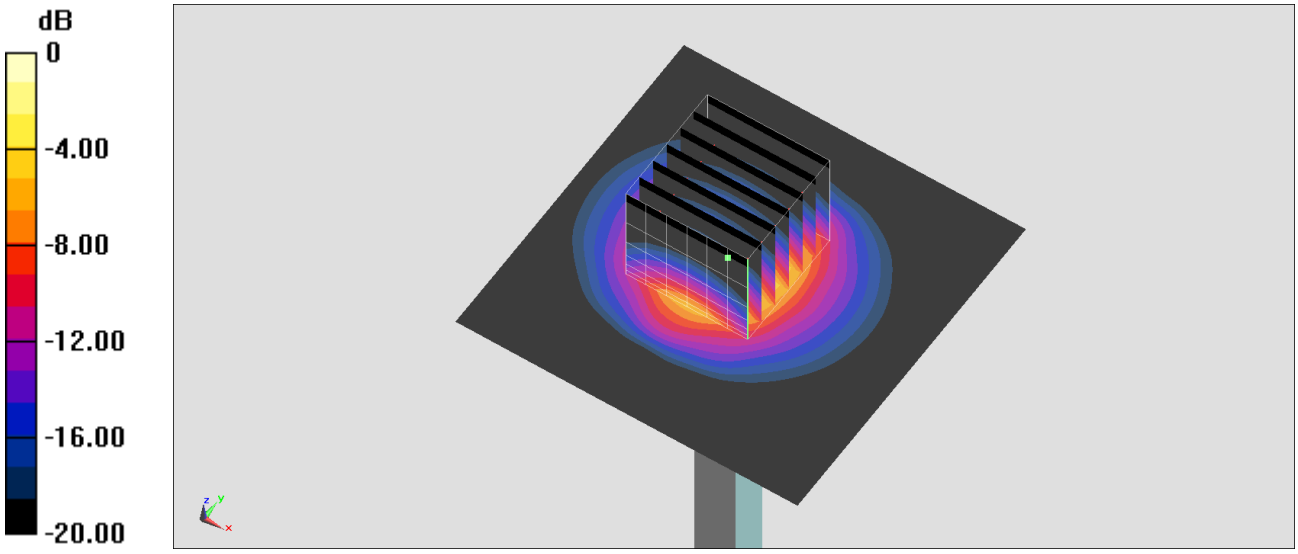

0 dB = 11.7 W/kg = 10.68 dBW/kg

System Check_Head_3700MHz

DUT: D3700V2-1006

Communication System: CW ; Frequency: 3700 MHz;Duty Cycle: 1:1
Medium: HSL_3700_201016 Medium parameters used: f = 3700 MHz; σ = 3.208 S/m; ε_r = 38.215; ρ = 1000 kg/m^3
Ambient Temperature：23.5 ℃; Liquid Temperature：22.5 ℃

DASY5 Configuration:
- Probe: EX3DV4 - SN3753; ConvF(6.75, 6.75, 6.75) @ 3700 MHz; Calibrated: 2020/6/25
- Sensor-Surface: 1.4mm (Mechanical Surface Detection)
- Electronics: DAE4 Sn854; Calibrated: 2020/5/26
- Phantom: ELI v5.0; Type: QDOVA002AA; Serial: 1131
- Measurement SW: DASY52, Version 52.10 (4);SEMCAD X Version 14.6.14 (7483)

Pin=100mW/Area Scan (71x71x1): Interpolated grid: dx=1.200 mm, dy=1.200 mm
Maximum value of SAR (interpolated) = 12.6 W/kg

Pin=100mW/Zoom Scan (7x7x7)/Cube 0: Measurement grid: dx=5mm, dy=5mm, dz=1.4mm
Reference Value = 65.92 V/m; Power Drift = -0.06 dB
Peak SAR (extrapolated) = 18.9 W/kg
SAR(1 g) = 6.27 W/kg; SAR(10 g) = 2.25 W/kg
Maximum value of SAR (measured) = 12.9 W/kg

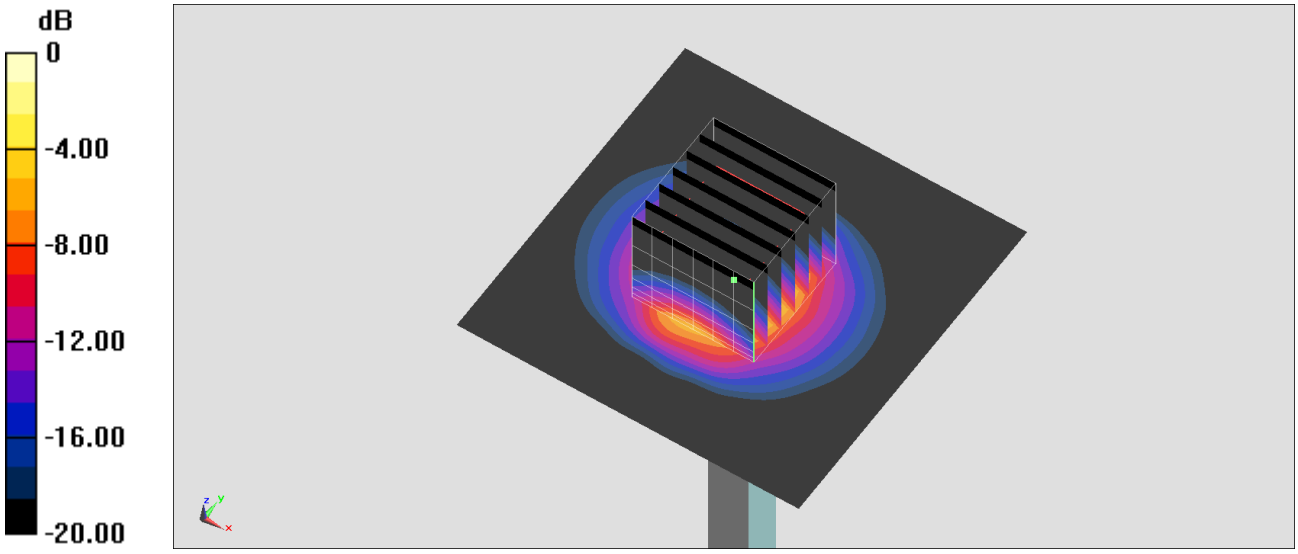

0 dB = 12.9 W/kg = 11.11 dBW/kg