System Check_Head_750MHz

DUT: D750V3-1107

Communication System: CW; Frequency: 750 MHz;Duty Cycle: 1:1
Medium: HSL_750_200930 Medium parameters used: f = 750 MHz; σ = 0.893 S/m; ε_r = 42.947; ρ = 1000 kg/m^3
Ambient Temperature：23.8 ℃; Liquid Temperature：22.8 ℃

DASY5 Configuration
- Probe: EX3DV4 - SN3728; ConvF(9.67, 9.67, 9.67) @ 750 MHz; Calibrated: 2020/2/4
- Sensor-Surface: 1.4mm (Mechanical Surface Detection)
- Electronics: DAE4 Sn1311; Calibrated: 2020/8/25
- Phantom: ELI v4.0; Type: QDOVA001BB; Serial: 1029
- Measurement SW: DASY52, Version 52.10 (4); SEMCAD X Version 14.6.14 (7483)

Pin=250mW/Area Scan (61x61x1): Interpolated grid: dx=1.500 mm, dy=1.500 mm
Maximum value of SAR (interpolated) = 2.85 W/kg

Pin=250mW/Zoom Scan (5x5x7)/Cube 0: Measurement grid: dx=8mm, dy=8mm, dz=5mm
Reference Value = 60.78 V/m; Power Drift = -0.08 dB
Peak SAR (extrapolated) = 3.54 W/kg
SAR(1 g) = 2.1 W/kg; SAR(10 g) = 1.35 W/kg
Maximum value of SAR (measured) = 2.99 W/kg

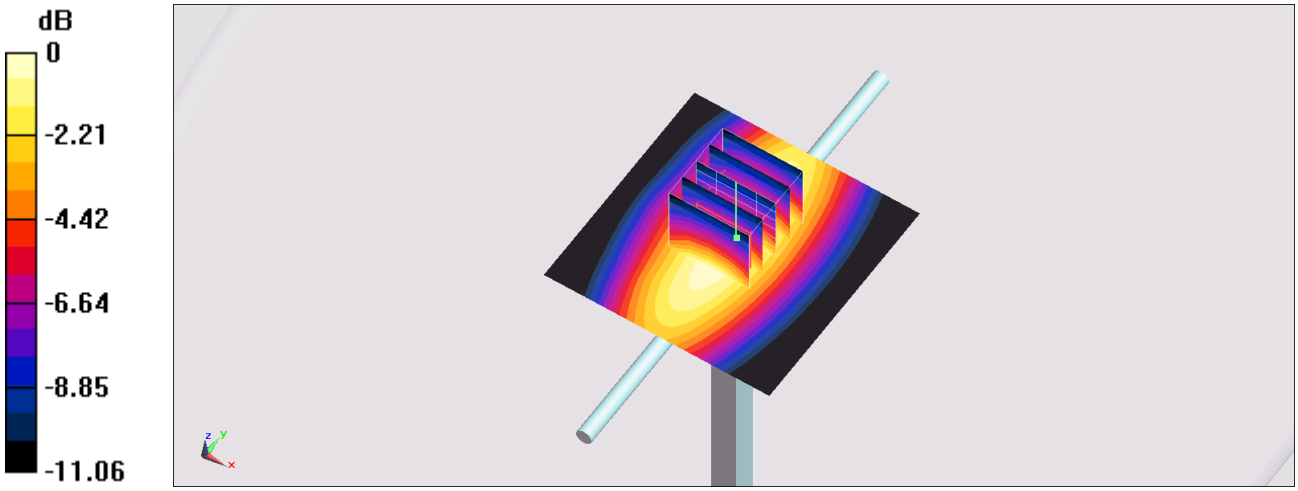

0 dB = 2.85 W/kg = 4.55 dBW/kg

System Check_Head_750MHz

DUT: D750V3-1107

Communication System: CW ; Frequency: 750 MHz;Duty Cycle: 1:1
Medium: HSL_750_201006 Medium parameters used: f = 750 MHz; σ = 0.89 S/m; ε_r = 43.137; ρ = 1000 kg/m^3
Ambient Temperature：23.7 ℃; Liquid Temperature：22.7 ℃

DASY5 Configuration
- Probe: EX3DV4 - SN3642; ConvF(8.9, 8.9, 8.9) @ 750 MHz; Calibrated: 2020/4/29
- Sensor-Surface: 1.4mm (Mechanical Surface Detection)
- Electronics: DAE4 Sn854; Calibrated: 2020/5/26
- Phantom: ELI v4.0; Type: QDOVA001BB; Serial: 1029
- Measurement SW: DASY52, Version 52.10 (4); SEMCAD X Version 14.6.14 (7483)

Pin=250mW/Area Scan (61x61x1): Interpolated grid: dx=1.500 mm, dy=1.500 mm
Maximum value of SAR (interpolated) = 2.72 W/kg

Pin=250mW/Zoom Scan (5x5x7)/Cube 0: Measurement grid: dx=8mm, dy=8mm, dz=5mm
Reference Value = 58.26 V/m; Power Drift = -0.13 dB
Peak SAR (extrapolated) = 3.06 W/kg
SAR(1 g) = 2.05 W/kg; SAR(10 g) = 1.35 W/kg
Maximum value of SAR (measured) = 2.74 W/kg

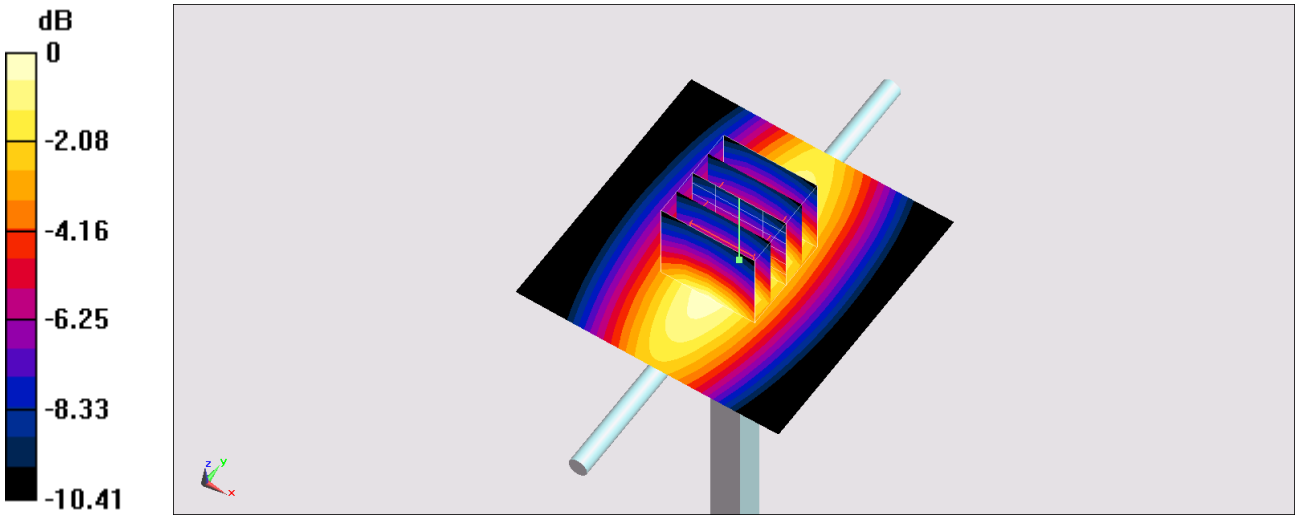

0 dB = 2.72 W/kg = 4.35 dBW/kg

System Check_Head_750MHz

DUT: D750V3-1107

Communication System: CW ; Frequency: 750 MHz;Duty Cycle: 1:1
Medium: HSL_750_201015 Medium parameters used: f = 750 MHz; σ = 0.89 S/m; ε_r = 42.13; ρ = 1000 kg/m^3
Ambient Temperature：23.4 ℃; Liquid Temperature：22.4 ℃

DASY5 Configuration
- Probe: EX3DV4 - SN3642; ConvF(8.9, 8.9, 8.9) @ 750 MHz; Calibrated: 2020/4/29
- Sensor-Surface: 1.4mm (Mechanical Surface Detection)
- Electronics: DAE4 Sn1311; Calibrated: 2020/8/25
- Phantom: ELI v4.0; Type: QDOVA001BB; Serial: 1029
- Measurement SW: DASY52, Version 52.10 (4); SEMCAD X Version 14.6.14 (7483)

Pin=250mW/Area Scan (61x61x1): Interpolated grid: dx=1.500 mm, dy=1.500 mm
Maximum value of SAR (interpolated) = 2.72 W/kg

Pin=250mW/Zoom Scan (5x5x7)/Cube 0: Measurement grid: dx=8mm, dy=8mm, dz=5mm
Reference Value = 59.71 V/m; Power Drift = -0.12 dB
Peak SAR (extrapolated) = 3.24 W/kg
SAR(1 g) = 2.17 W/kg; SAR(10 g) = 1.43 W/kg
Maximum value of SAR (measured) = 2.89 W/kg

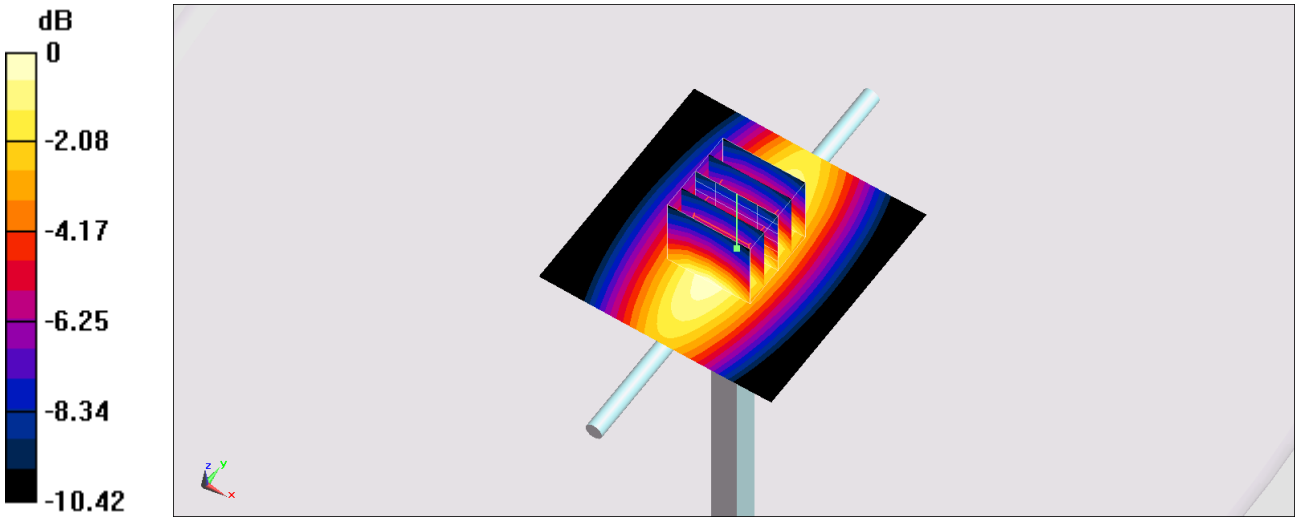

0 dB = 2.72 W/kg = 4.35 dBW/kg

System Check_Head_835MHz

DUT: D835V2-4d167

Communication System: CW; Frequency: 835 MHz;Duty Cycle: 1:1
Medium: HSL_850_200917 Medium parameters used: f = 835 MHz; σ = 0.893 S/m; ε_r = 42.528; ρ = 1000 kg/m^3
Ambient Temperature：23.6 ℃; Liquid Temperature：22.6 ℃

DASY5 Configuration
- Probe: EX3DV4 - SN3728; ConvF(9.51, 9.51, 9.51) @ 835 MHz; Calibrated: 2020/2/4
- Sensor-Surface: 1.4mm (Mechanical Surface Detection)
- Electronics: DAE4 Sn1311; Calibrated: 2020/8/25
- Phantom: ELI v4.0; Type: QDOVA001BB; Serial: 1029
- Measurement SW: DASY52, Version 52.10 (4); SEMCAD X Version 14.6.14 (7483)

Pin=250mW/Area Scan (61x61x1): Interpolated grid: dx=1.500 mm, dy=1.500 mm
Maximum value of SAR (interpolated) = 3.14 W/kg

Pin=250mW/Zoom Scan (5x5x7)/Cube 0: Measurement grid: dx=8mm, dy=8mm, dz=5mm
Reference Value = 61.74 V/m; Power Drift = -0.00 dB
Peak SAR (extrapolated) = 3.48 W/kg
SAR(1 g) = 2.37 W/kg; SAR(10 g) = 1.56 W/kg
Maximum value of SAR (measured) = 3.13 W/kg

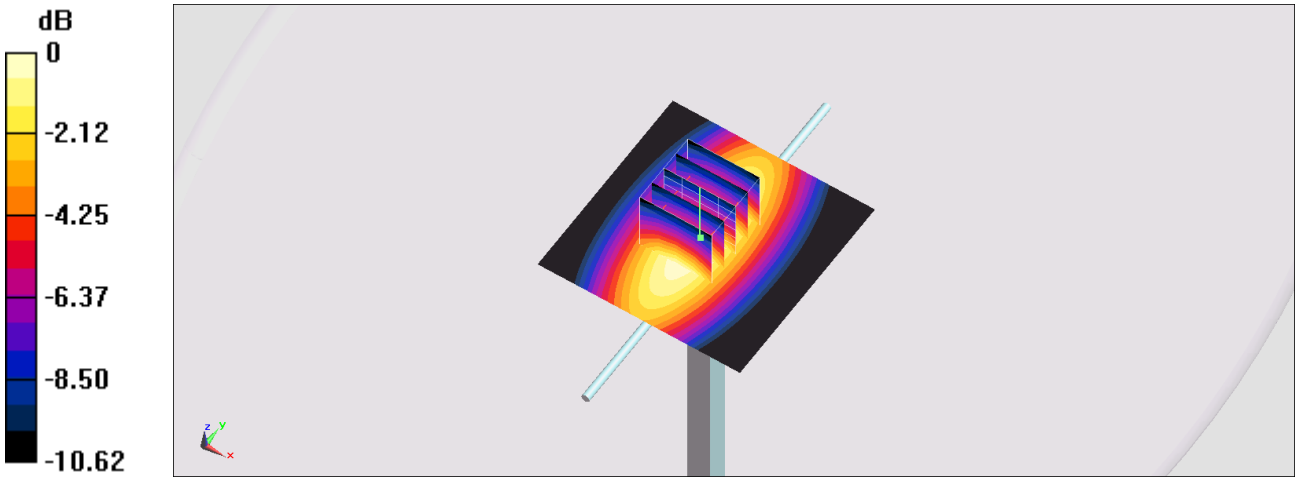

0 dB = 3.14 W/kg = 4.97 dBW/kg

System Check_Head_835MHz

DUT: D835V2-4d167

Communication System: CW ; Frequency: 835 MHz;Duty Cycle: 1:1
Medium: HSL_850_201006 Medium parameters used: f = 835 MHz; σ = 0.92 S/m; ε_r = 42.721; ρ = 1000 kg/m^3
Ambient Temperature：23.7 ℃; Liquid Temperature：22.7 ℃

DASY5 Configuration
- Probe: EX3DV4 - SN3753; ConvF(9.44, 9.44, 9.44) @ 835 MHz; Calibrated: 2020/6/25
- Sensor-Surface: 1.4mm (Mechanical Surface Detection)
- Electronics: DAE4 Sn854; Calibrated: 2020/5/26
- Phantom: ELI v4.0; Type: QDOVA001BB; Serial: 1029
- Measurement SW: DASY52, Version 52.10 (4); SEMCAD X Version 14.6.14 (7483)

Pin=50mW/Area Scan (61x61x1): Interpolated grid: dx=1.500 mm, dy=1.500 mm
Maximum value of SAR (interpolated) = 0.629 W/kg

Pin=50mW/Zoom Scan (5x5x7)/Cube 0: Measurement grid: dx=8mm, dy=8mm, dz=5mm
Reference Value = 27.55 V/m; Power Drift = -0.07 dB
Peak SAR (extrapolated) = 0.696 W/kg
SAR(1 g) = 0.476 W/kg; SAR(10 g) = 0.319 W/kg
Maximum value of SAR (measured) = 0.624 W/kg

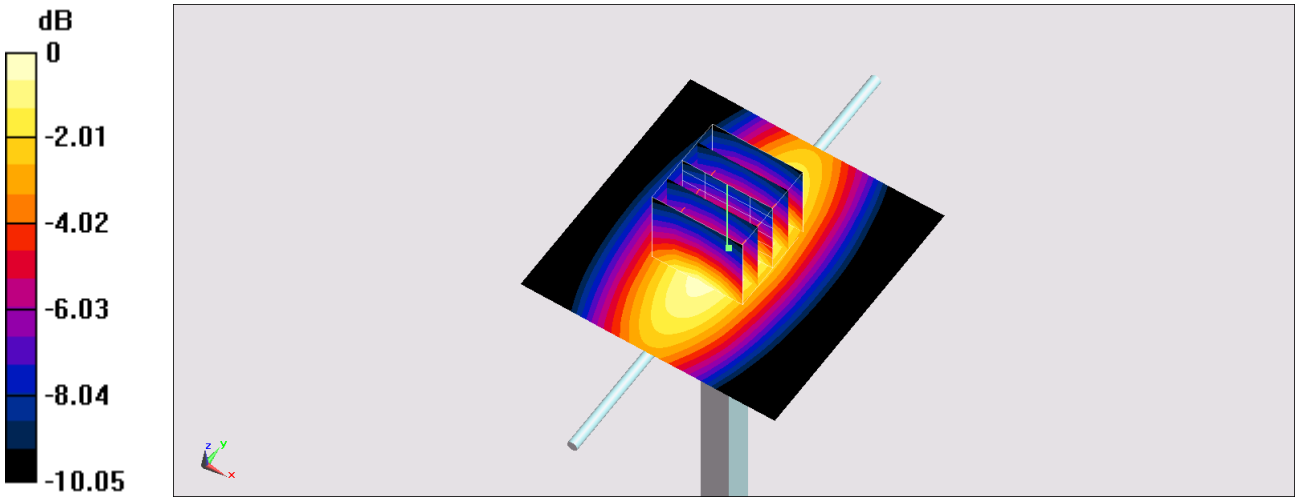

0 dB = 0.629 W/kg = -2.01 dBW/kg

System Check_Head_835MHz

DUT: D835V2-4d167

Communication System: CW; Frequency: 835 MHz;Duty Cycle: 1:1
Medium: HSL_850_201016 Medium parameters used: f = 835 MHz; σ = 0.894 S/m; ε_r = 42.578; ρ = 1000 kg/m^3
Ambient Temperature：23.4 ℃; Liquid Temperature：22.4 ℃

DASY5 Configuration
- Probe: EX3DV4 - SN3642; ConvF(8.73, 8.73, 8.73) @ 835 MHz; Calibrated: 2020/4/29
- Sensor-Surface: 1.4mm (Mechanical Surface Detection)
- Electronics: DAE4 Sn1311; Calibrated: 2020/8/25
- Phantom: ELI v4.0; Type: QDOVA001BB; Serial: 1029
- Measurement SW: DASY52, Version 52.10 (4); SEMCAD X Version 14.6.14 (7483)

Pin=250mW/Area Scan (61x61x1): Interpolated grid: dx=1.500 mm, dy=1.500 mm
Maximum value of SAR (interpolated) = 3.31 W/kg

Pin=250mW/Zoom Scan (5x5x7)/Cube 0: Measurement grid: dx=8mm, dy=8mm, dz=5mm
Reference Value = 64.28 V/m; Power Drift = -0.12 dB
Peak SAR (extrapolated) = 3.68 W/kg
SAR(1 g) = 2.44 W/kg; SAR(10 g) = 1.6 W/kg
Maximum value of SAR (measured) = 3.28 W/kg

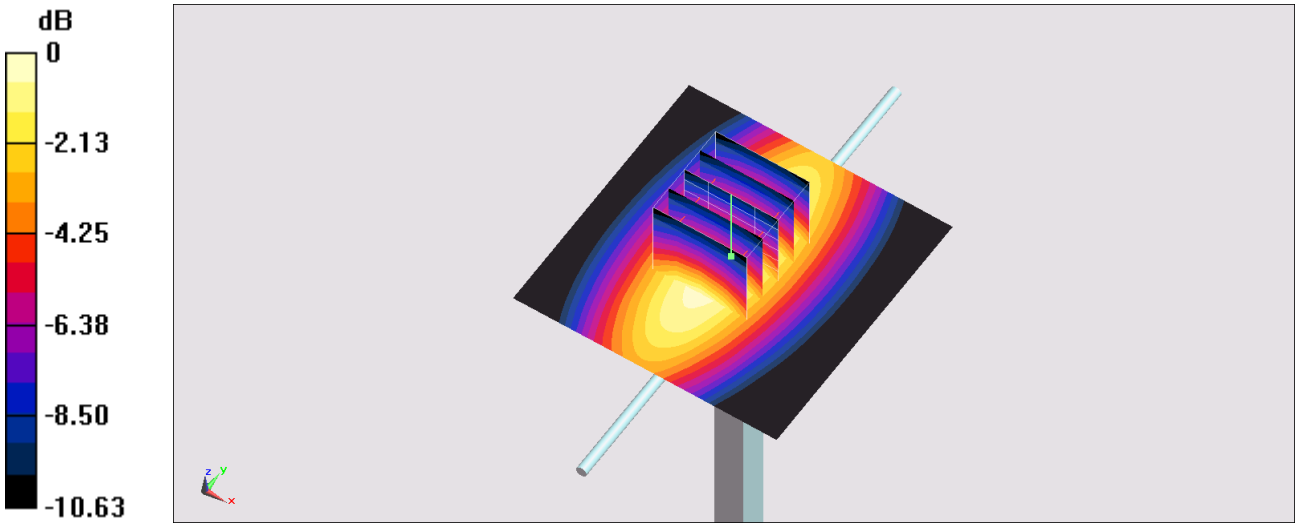

0 dB = 3.31 W/kg = 5.20 dBW/kg

System Check_Head_1750MHz

DUT: D1750V2-1112

Communication System: CW; Frequency: 1750 MHz;Duty Cycle: 1:1
Medium: HSL_1750_200917 Medium parameters used: f = 1750 MHz; σ = 1.362 S/m; ε_r = 40.669; ρ = 1000 kg/m^3
Ambient Temperature：23.6 ℃; Liquid Temperature：22.6 ℃

DASY5 Configuration
- Probe: EX3DV4 - SN3728; ConvF(8.06, 8.06, 8.06) @ 1750 MHz; Calibrated: 2020/2/4
- Sensor-Surface: 1.4mm (Mechanical Surface Detection)
- Electronics: DAE4 Sn1311; Calibrated: 2020/8/25
- Phantom: ELI v4.0; Type: QDOVA001BB; Serial: 1029
- Measurement SW: DASY52, Version 52.10 (4); SEMCAD X Version 14.6.14 (7483)

Pin=250mW/Area Scan (61x61x1): Interpolated grid: dx=1.500 mm, dy=1.500 mm
Maximum value of SAR (interpolated) = 13.5 W/kg

Pin=250mW/Zoom Scan (5x5x7)/Cube 0: Measurement grid: dx=8mm, dy=8mm, dz=5mm
Reference Value = 100.8 V/m; Power Drift = 0.07 dB
Peak SAR (extrapolated) = 16.1 W/kg
SAR(1 g) = 8.57 W/kg; SAR(10 g) = 4.54 W/kg
Maximum value of SAR (measured) = 13.3 W/kg

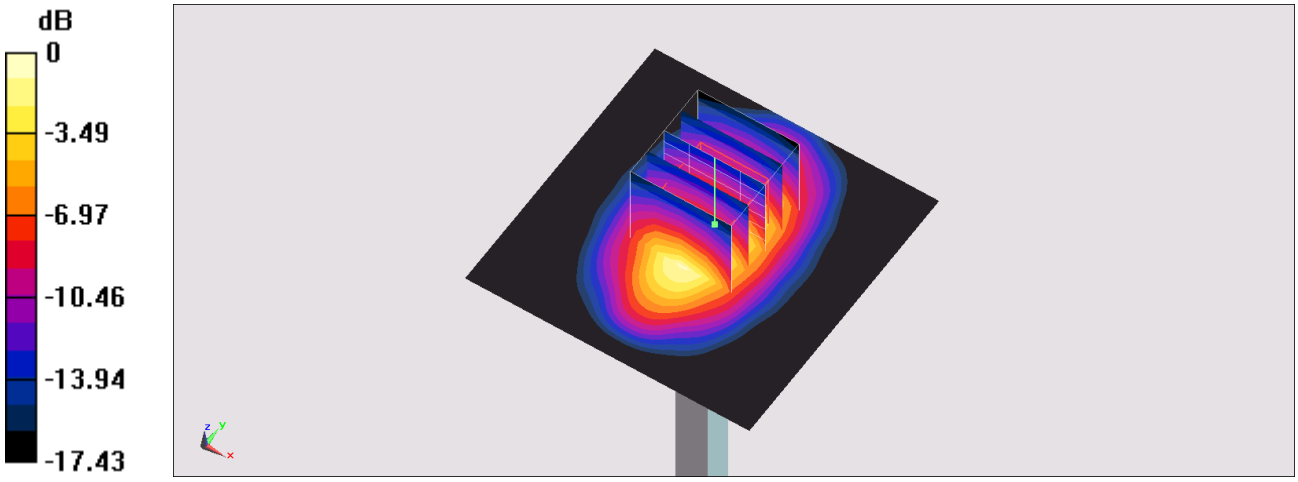

0 dB = 13.5 W/kg = 11.30 dBW/kg

System Check_Head_1750MHz

DUT: D1750V2-1112

Communication System: CW; Frequency: 1750 MHz;Duty Cycle: 1:1
Medium: HSL_1750_201004 Medium parameters used: f = 1750 MHz; σ = 1.388 S/m; ε_r = 39.88; ρ = 1000 kg/m^3
Ambient Temperature：23.7 ℃; Liquid Temperature：22.7 ℃

DASY5 Configuration
- Probe: EX3DV4 - SN3753; ConvF(8.25, 8.25, 8.25) @ 1750 MHz; Calibrated: 2020/6/25
- Sensor-Surface: 1.4mm (Mechanical Surface Detection)
- Electronics: DAE4 Sn854; Calibrated: 2020/5/26
- Phantom: ELI v4.0; Type: QDOVA001BB; Serial: 1029
- Measurement SW: DASY52, Version 52.10 (4); SEMCAD X Version 14.6.14 (7483)

Pin=50mW/Area Scan (61x61x1): Interpolated grid: dx=1.500 mm, dy=1.500 mm
Maximum value of SAR (interpolated) = 2.86 W/kg

Pin=50mW/Zoom Scan (5x5x7)/Cube 0: Measurement grid: dx=8mm, dy=8mm, dz=5mm
Reference Value = 45.75 V/m; Power Drift = -0.06 dB
Peak SAR (extrapolated) = 3.25 W/kg
SAR(1 g) = 1.81 W/kg; SAR(10 g) = 0.994 W/kg
Maximum value of SAR (measured) = 2.72 W/kg

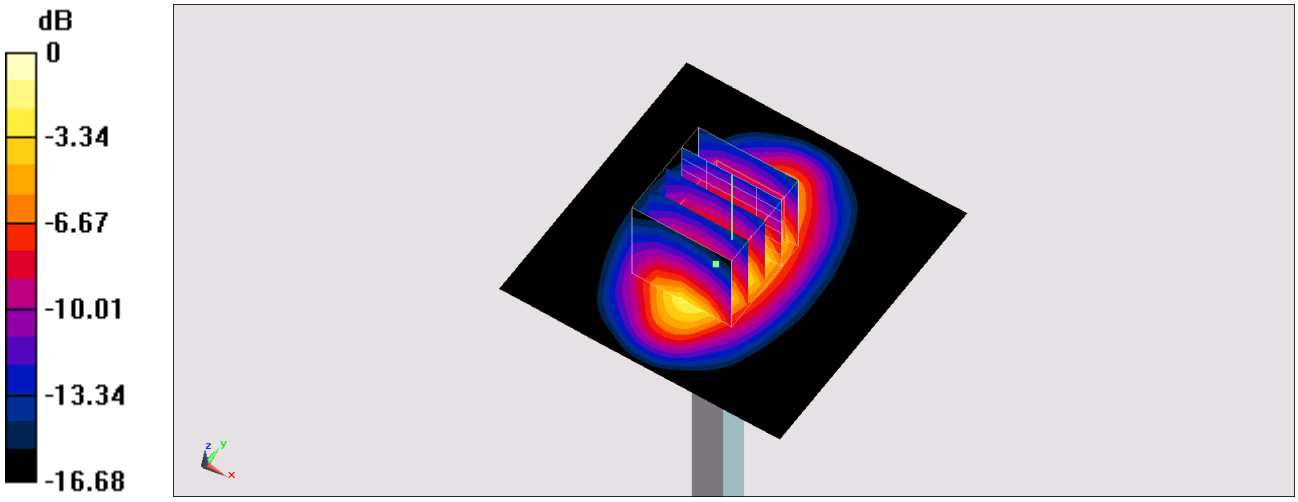

0 dB = 2.86 W/kg = 4.56 dBW/kg

System Check_Head_1750MHz

DUT: D1750V2-1112

Communication System: CW; Frequency: 1750 MHz;Duty Cycle: 1:1
Medium: HSL_1750_201015 Medium parameters used: f = 1750 MHz; σ = 1.362 S/m; ε_r = 40.395; ρ = 1000 kg/m^3
Ambient Temperature：23.4 ℃; Liquid Temperature：22.4 ℃

DASY5 Configuration
- Probe: EX3DV4 - SN3642; ConvF(7.89, 7.89, 7.89) @ 1750 MHz; Calibrated: 2020/4/29
- Sensor-Surface: 1.4mm (Mechanical Surface Detection)
- Electronics: DAE4 Sn1311; Calibrated: 2020/8/25
- Phantom: ELI v4.0; Type: QDOVA001BB; Serial: 1029
- Measurement SW: DASY52, Version 52.10 (4); SEMCAD X Version 14.6.14 (7483)

Pin=250mW/Area Scan (61x61x1): Interpolated grid: dx=1.500 mm, dy=1.500 mm
Maximum value of SAR (interpolated) = 12.8 W/kg

Pin=250mW/Zoom Scan (5x5x7)/Cube 0: Measurement grid: dx=8mm, dy=8mm, dz=5mm
Reference Value = 99.02 V/m; Power Drift = 0.14 dB
Peak SAR (extrapolated) = 16.0 W/kg
SAR(1 g) = 8.66 W/kg; SAR(10 g) = 4.57 W/kg
Maximum value of SAR (measured) = 13.3 W/kg

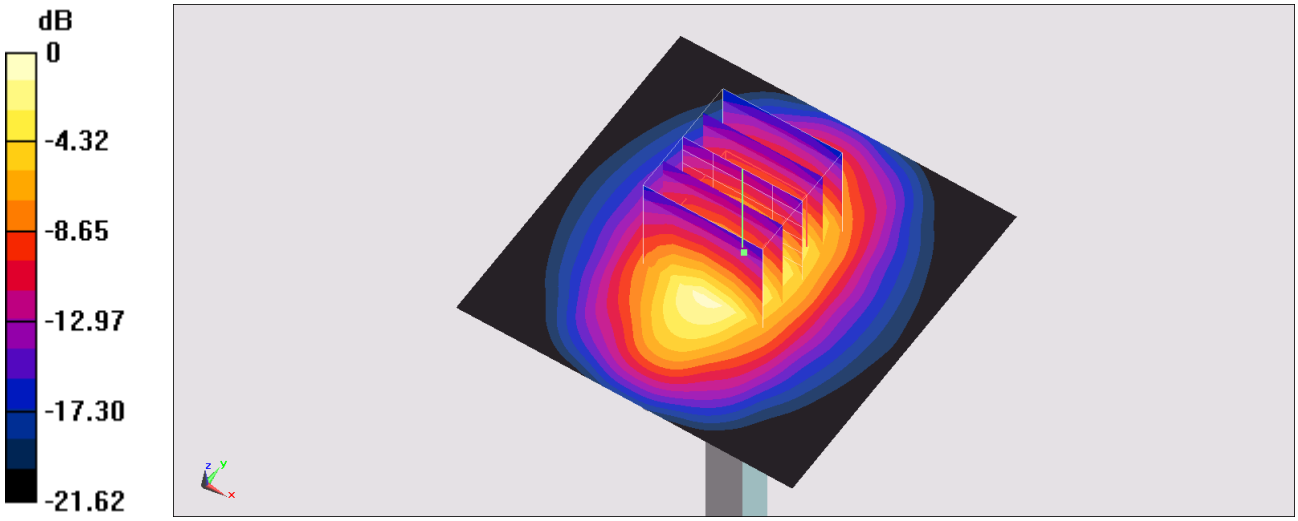

0 dB = 12.8 W/kg = 11.07 dBW/kg

System Check_Head_1900MHz

DUT: D1900V2-5d185

Communication System: CW ; Frequency: 1900 MHz;Duty Cycle: 1:1
Medium: HSL_1900_200917 Medium parameters used: f = 1900 MHz; σ = 1.418 S/m; ε_r = 39.377; ρ = 1000 kg/m^3
Ambient Temperature：23.6 ℃; Liquid Temperature：22.6 ℃

DASY5 Configuration
- Probe: EX3DV4 - SN3728; ConvF(7.82, 7.82, 7.82) @ 1900 MHz; Calibrated: 2020/2/4
- Sensor-Surface: 1.4mm (Mechanical Surface Detection)
- Electronics: DAE4 Sn1311; Calibrated: 2020/8/25
- Phantom: ELI v4.0; Type: QDOVA001BB; Serial: 1029
- Measurement SW: DASY52, Version 52.10 (4); SEMCAD X Version 14.6.14 (7483)

Pin=250mW/Area Scan (61x61x1): Interpolated grid: dx=1.500 mm, dy=1.500 mm
Maximum value of SAR (interpolated) = 16.2 W/kg

Pin=250mW/Zoom Scan (5x5x7)/Cube 0: Measurement grid: dx=8mm, dy=8mm, dz=5mm
Reference Value = 106.2 V/m; Power Drift = -0.04 dB
Peak SAR (extrapolated) = 18.3 W/kg
SAR(1 g) = 9.97 W/kg; SAR(10 g) = 5.18 W/kg
Maximum value of SAR (measured) = 15.4 W/kg

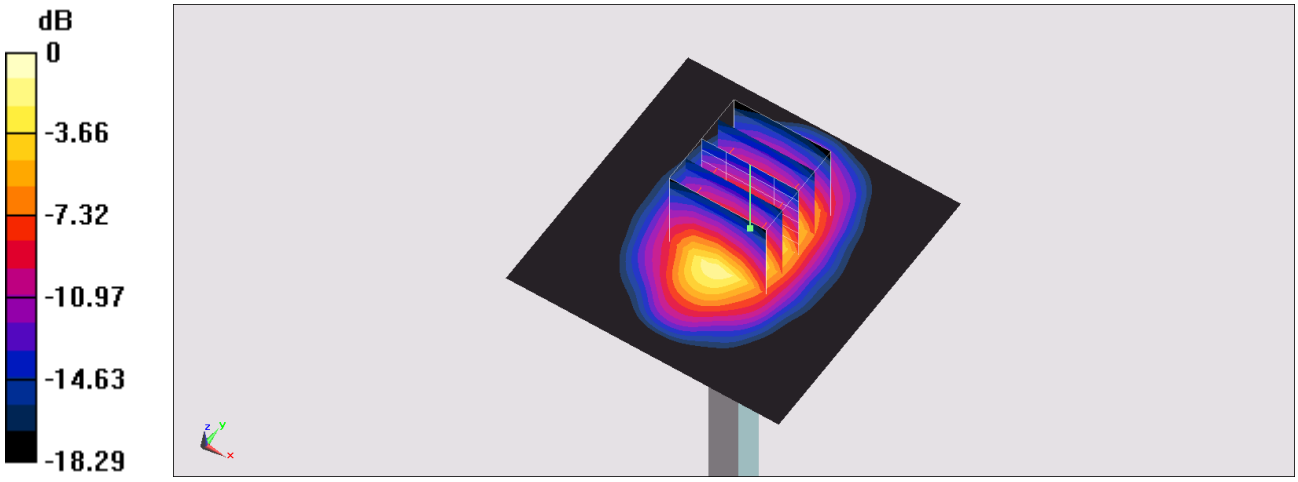

0 dB = 16.2 W/kg = 12.10 dBW/kg

System Check_Head_1900MHz

DUT: D1900V2-5d185

Communication System: CW; Frequency: 1900 MHz;Duty Cycle: 1:1
Medium: HSL_1900_201005 Medium parameters used: f = 1900 MHz; σ = 1.421 S/m; ε_r = 40.705; ρ = 1000 kg/m^3
Ambient Temperature：23.7 ℃; Liquid Temperature：22.7 ℃

DASY5 Configuration
- Probe: EX3DV4 - SN3753; ConvF(7.92, 7.92, 7.92) @ 1900 MHz; Calibrated: 2020/6/25
- Sensor-Surface: 1.4mm (Mechanical Surface Detection)
- Electronics: DAE4 Sn854; Calibrated: 2020/5/26
- Phantom: ELI v4.0; Type: QDOVA001BB; Serial: 1029
- Measurement SW: DASY52, Version 52.10 (4); SEMCAD X Version 14.6.14 (7483)

Pin=50mW/Area Scan (61x61x1): Interpolated grid: dx=1.500 mm, dy=1.500 mm
Maximum value of SAR (interpolated) = 2.43 W/kg

Pin=50mW/Zoom Scan (5x5x7)/Cube 0: Measurement grid: dx=8mm, dy=8mm, dz=5mm
Reference Value = 41.06 V/m; Power Drift = -0.12 dB
Peak SAR (extrapolated) = 3.25 W/kg
SAR(1 g) = 1.86 W/kg; SAR(10 g) = 1.01 W/kg
Maximum value of SAR (measured) = 2.27 W/kg

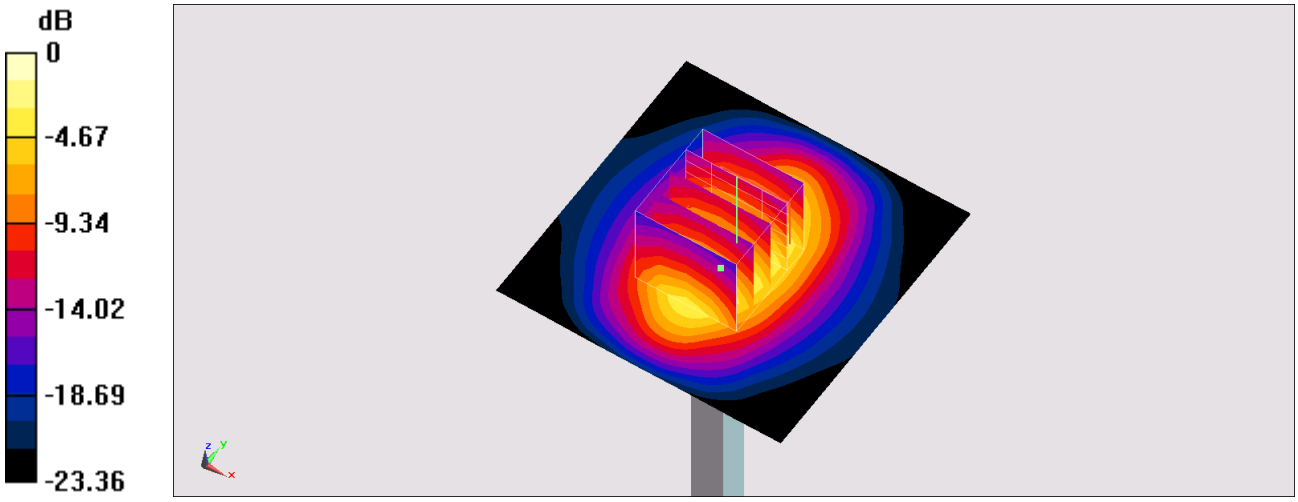

0 dB = 2.43 W/kg = 3.86 dBW/kg

System Check_Head_1900MHz

DUT: D1900V2-5d185

Communication System: CW; Frequency: 1900 MHz;Duty Cycle: 1:1
Medium: HSL_1900_201016 Medium parameters used: f = 1900 MHz; σ = 1.431 S/m; ε_r = 40.835; ρ = 1000 kg/m^3
Ambient Temperature：23.4 ℃; Liquid Temperature：22.4 ℃

DASY5 Configuration
- Probe: EX3DV4 - SN3642; ConvF(7.75, 7.75, 7.75) @ 1900 MHz; Calibrated: 2020/4/29
- Sensor-Surface: 1.4mm (Mechanical Surface Detection)
- Electronics: DAE4 Sn1311; Calibrated: 2020/8/25
- Phantom: ELI v4.0; Type: QDOVA001BB; Serial: 1029
- Measurement SW: DASY52, Version 52.10 (4); SEMCAD X Version 14.6.14 (7483)

Pin=250mW/Area Scan (61x61x1): Interpolated grid: dx=1.500 mm, dy=1.500 mm
Maximum value of SAR (interpolated) = 16.8 W/kg

Pin=250mW/Zoom Scan (5x5x7)/Cube 0: Measurement grid: dx=8mm, dy=8mm, dz=5mm
Reference Value = 110.2 V/m; Power Drift = 0.08 dB
Peak SAR (extrapolated) = 19.4 W/kg
SAR(1 g) = 10.4 W/kg; SAR(10 g) = 5.33 W/kg
Maximum value of SAR (measured) = 16.1 W/kg

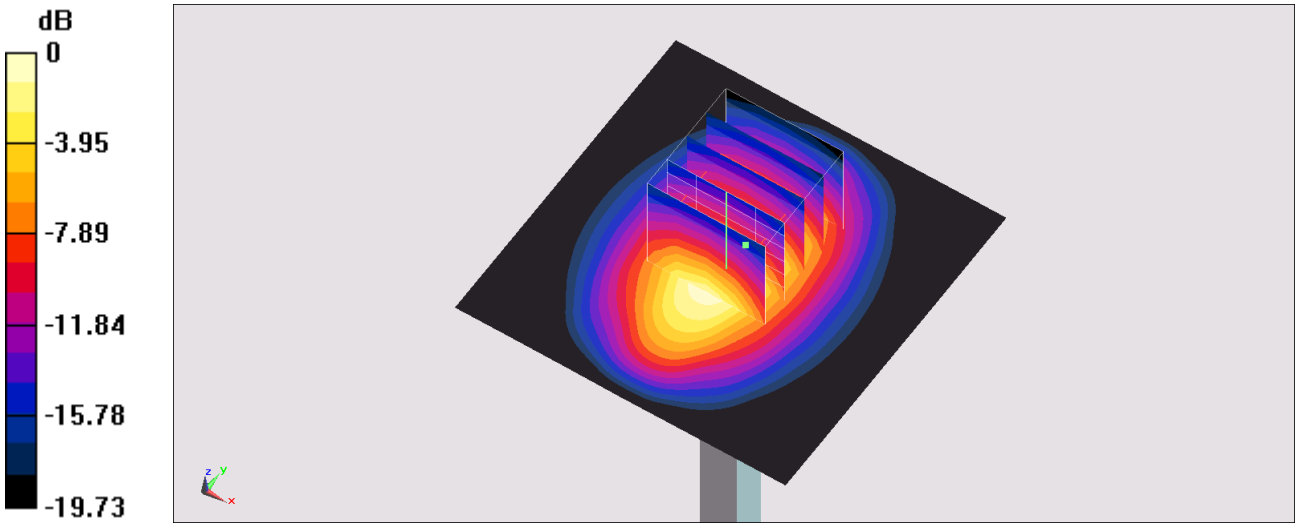

0 dB = 16.8 W/kg = 12.25 dBW/kg

System Check_Head_2300MHz

DUT: D2300V2-1006

Communication System: CW; Frequency: 2300 MHz;Duty Cycle: 1:1
Medium: HSL_2300_200917 Medium parameters used: f = 2300 MHz; σ = 1.617 S/m; ε_r = 39.237; ρ = 1000 kg/m^3
Ambient Temperature：23.6 ℃; Liquid Temperature：22.6 ℃

DASY5 Configuration
- Probe: EX3DV4 - SN3728; ConvF(7.56, 7.56, 7.56) @ 2300 MHz; Calibrated: 2020/2/4
- Sensor-Surface: 1.4mm (Mechanical Surface Detection)
- Electronics: DAE4 Sn1311; Calibrated: 2020/8/25
- Phantom: ELI v4.0; Type: QDOVA001BB; Serial: 1029
- Measurement SW: DASY52, Version 52.10 (4); SEMCAD X Version 14.6.14 (7483)

Pin=250mW/Area Scan (71x71x1): Interpolated grid: dx=1.200 mm, dy=1.200 mm
Maximum value of SAR (interpolated) = 19.9 W/kg

Pin=250mW/Zoom Scan (7x7x7)/Cube 0: Measurement grid: dx=5mm, dy=5mm, dz=5mm
Reference Value = 111.2 V/m; Power Drift = -0.18 dB
Peak SAR (extrapolated) = 23.8 W/kg
SAR(1 g) = 12.1 W/kg; SAR(10 g) = 5.76 W/kg
Maximum value of SAR (measured) = 19.6 W/kg

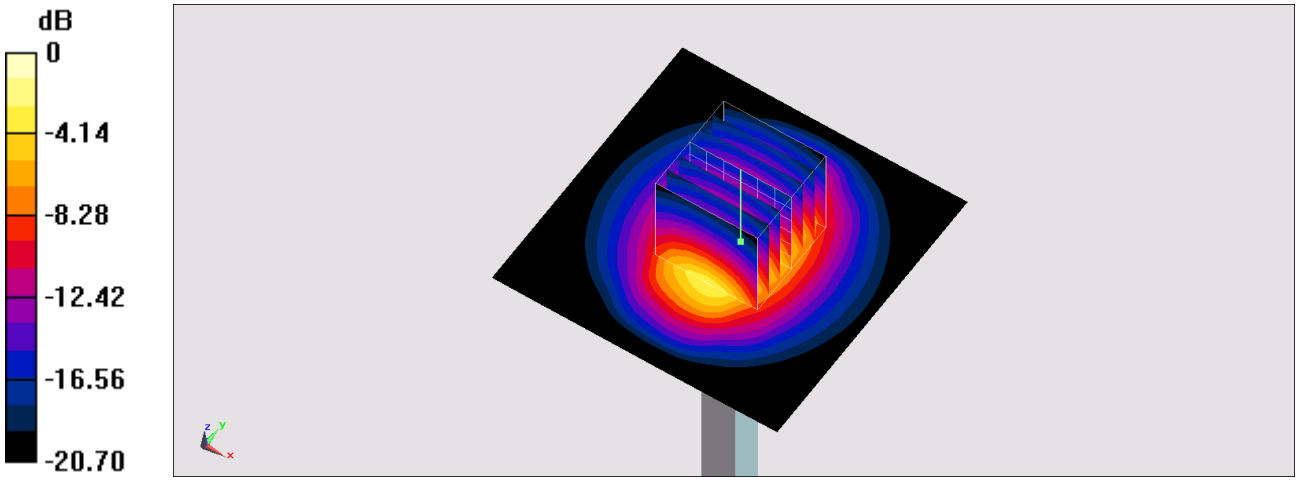

0 dB = 19.9 W/kg = 12.99 dBW/kg

System Check_Head_2300MHz

DUT: D2300V2-1006

Communication System: CW; Frequency: 2300 MHz;Duty Cycle: 1:1
Medium: HSL_2300_201001 Medium parameters used: f = 2300 MHz; σ = 1.657 S/m; ε_r = 39.611; ρ = 1000 kg/m^3
Ambient Temperature：23.7 ℃; Liquid Temperature：22.7 ℃

DASY5 Configuration
- Probe: EX3DV4 - SN3753; ConvF(7.48, 7.48, 7.48) @ 2300 MHz; Calibrated: 2020/6/25
- Sensor-Surface: 1.4mm (Mechanical Surface Detection)
- Electronics: DAE4 Sn854; Calibrated: 2020/5/26
- Phantom: ELI v4.0; Type: QDOVA001BB; Serial: 1029
- Measurement SW: DASY52, Version 52.10 (4); SEMCAD X Version 14.6.14 (7483)

Pin=50mW/Area Scan (81x81x1): Interpolated grid: dx=1.200 mm, dy=1.200 mm
Maximum value of SAR (interpolated) = 3.75 W/kg

Pin=50mW/Zoom Scan (7x7x7)/Cube 0: Measurement grid: dx=5mm, dy=5mm, dz=5mm
Reference Value = 48.41 V/m; Power Drift = 0.09 dB
Peak SAR (extrapolated) = 4.51 W/kg
SAR(1 g) = 2.35 W/kg; SAR(10 g) = 1.17 W/kg
Maximum value of SAR (measured) = 3.72 W/kg

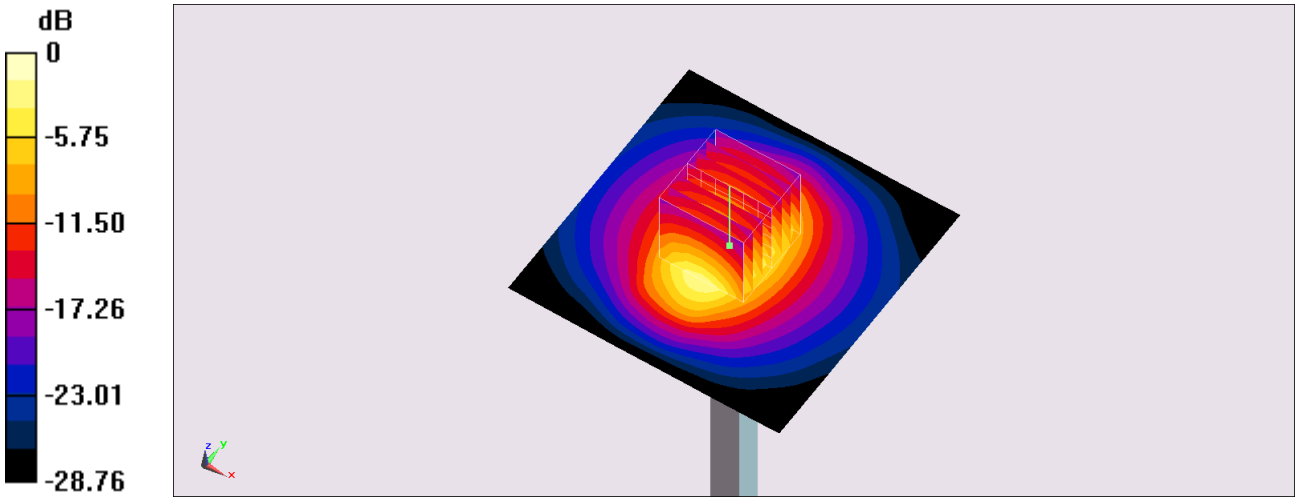

0 dB = 3.75 W/kg = 5.74 dBW/kg

System Check_Head_2300MHz

DUT: D2300V2-1006

Communication System: CW ; Frequency: 2300 MHz;Duty Cycle: 1:1
Medium: HSL_2300_201014 Medium parameters used: f = 2300 MHz; σ = 1.645 S/m; ε_r = 39.661; ρ = 1000 kg/m^3
Ambient Temperature：23.4 ℃; Liquid Temperature：22.4 ℃

DASY5 Configuration
- Probe: EX3DV4 - SN3642; ConvF(7.38, 7.38, 7.38) @ 2300 MHz; Calibrated: 2020/4/29
- Sensor-Surface: 1.4mm (Mechanical Surface Detection)
- Electronics: DAE4 Sn1311; Calibrated: 2020/8/25
- Phantom: ELI v4.0; Type: QDOVA001BB; Serial: 1029
- Measurement SW: DASY52, Version 52.10 (4); SEMCAD X Version 14.6.14 (7483)

Pin=250mW/Area Scan (71x71x1): Interpolated grid: dx=1.200 mm, dy=1.200 mm
Maximum value of SAR (interpolated) = 18.6 W/kg

Pin=250mW/Zoom Scan (7x7x7)/Cube 0: Measurement grid: dx=5mm, dy=5mm, dz=5mm
Reference Value = 108.3 V/m; Power Drift = 0.14 dB
Peak SAR (extrapolated) = 23.8 W/kg
SAR(1 g) = 11.6 W/kg; SAR(10 g) = 5.5 W/kg
Maximum value of SAR (measured) = 19.3 W/kg

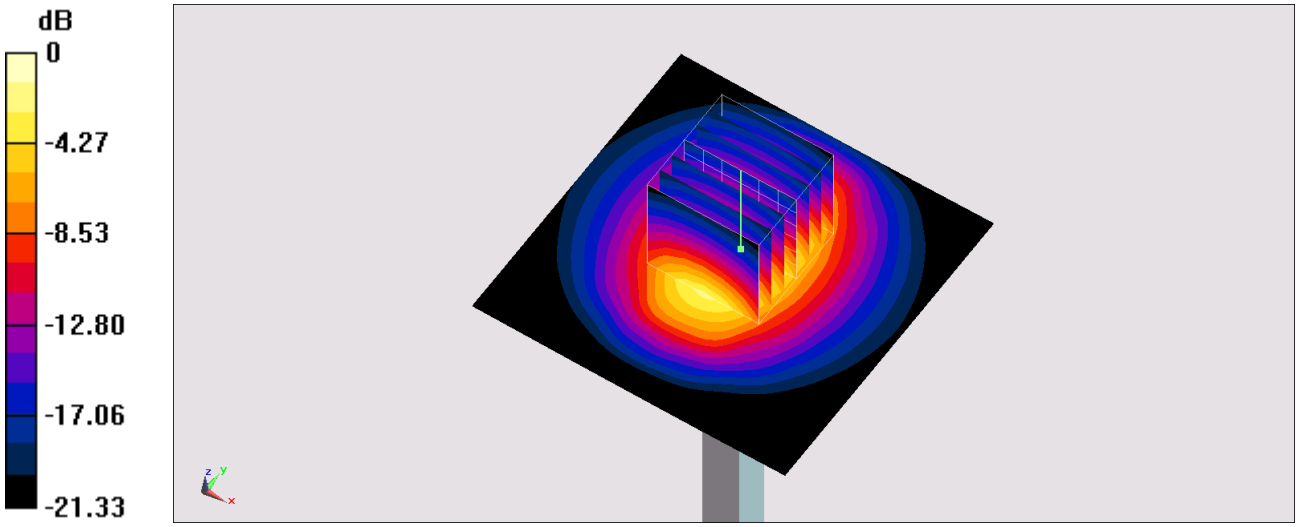

0 dB = 18.6 W/kg = 12.70 dBW/kg

System Check_Head_2600MHz

DUT: D2600V2-1008

Communication System: CW ; Frequency: 2600 MHz;Duty Cycle: 1:1
Medium: HSL_2600_200917 Medium parameters used: f = 2600 MHz; σ = 1.958 S/m; ε_r = 38.131; ρ = 1000 kg/m^3
Ambient Temperature：23.6 ℃; Liquid Temperature：22.6 ℃

DASY5 Configuration
- Probe: EX3DV4 - SN3728; ConvF(7.08, 7.08, 7.08) @ 2600 MHz; Calibrated: 2020/2/4
- Sensor-Surface: 1.4mm (Mechanical Surface Detection)
- Electronics: DAE4 Sn1311; Calibrated: 2020/8/25
- Phantom: ELI v4.0; Type: QDOVA001BB; Serial: 1029
- Measurement SW: DASY52, Version 52.10 (4); SEMCAD X Version 14.6.14 (7483)

Pin=50mW/Area Scan (71x71x1): Interpolated grid: dx=1.200 mm, dy=1.200 mm
Maximum value of SAR (interpolated) = 4.30 W/kg

Pin=50mW/Zoom Scan (7x7x7)/Cube 0: Measurement grid: dx=5mm, dy=5mm, dz=5mm
Reference Value = 47.52 V/m; Power Drift = 0.08 dB
Peak SAR (extrapolated) = 5.27 W/kg
SAR(1 g) = 2.56 W/kg; SAR(10 g) = 1.17 W/kg
Maximum value of SAR (measured) = 4.30 W/kg

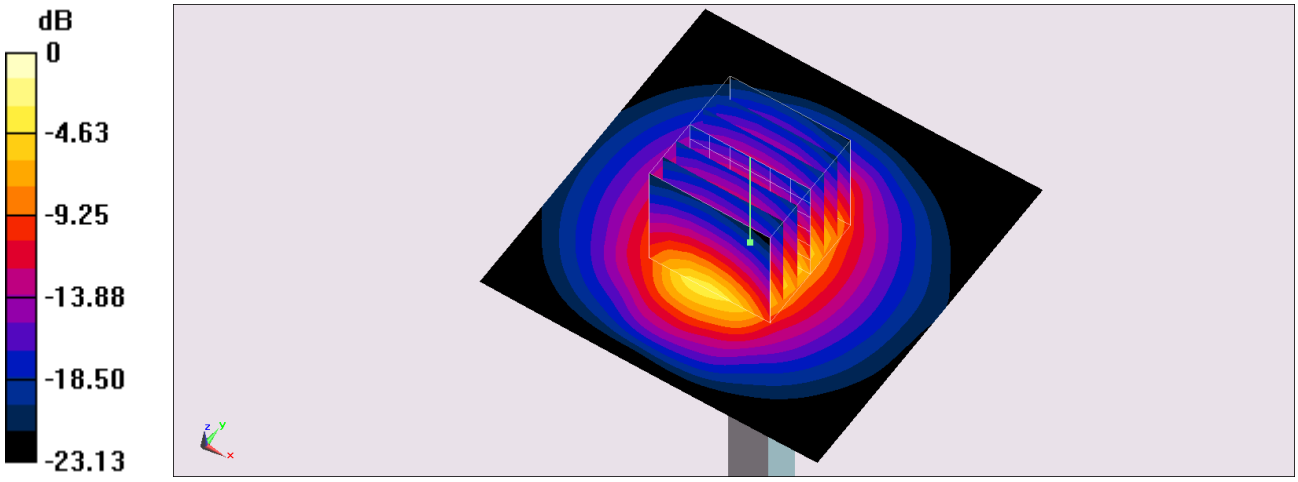

0 dB = 4.30 W/kg = 6.33 dBW/kg

System Check_Head_2600MHz

DUT: D2600V2-1008

Communication System: CW ; Frequency: 2600 MHz;Duty Cycle: 1:1
Medium: HSL_2600_201001 Medium parameters used: f = 2600 MHz; σ = 2.004 S/m; ε_r = 38.426; ρ = 1000 kg/m^3
Ambient Temperature：23.7 ℃; Liquid Temperature：22.7 ℃

DASY5 Configuration
- Probe: EX3DV4 - SN3753; ConvF(6.98, 6.98, 6.98) @ 2600 MHz; Calibrated: 2020/6/25
- Sensor-Surface: 1.4mm (Mechanical Surface Detection)
- Electronics: DAE4 Sn854; Calibrated: 2020/5/26
- Phantom: ELI v4.0; Type: QDOVA001BB; Serial: 1029
- Measurement SW: DASY52, Version 52.10 (4); SEMCAD X Version 14.6.14 (7483)

Pin=50mW/Area Scan (71x71x1): Interpolated grid: dx=1.200 mm, dy=1.200 mm
Maximum value of SAR (interpolated) = 4.54 W/kg

Pin=50mW/Zoom Scan (7x7x7)/Cube 0: Measurement grid: dx=5mm, dy=5mm, dz=5mm
Reference Value = 50.19 V/m; Power Drift = 0.08 dB
Peak SAR (extrapolated) = 5.58 W/kg
SAR(1 g) = 2.71 W/kg; SAR(10 g) = 1.24 W/kg
Maximum value of SAR (measured) = 4.55 W/kg

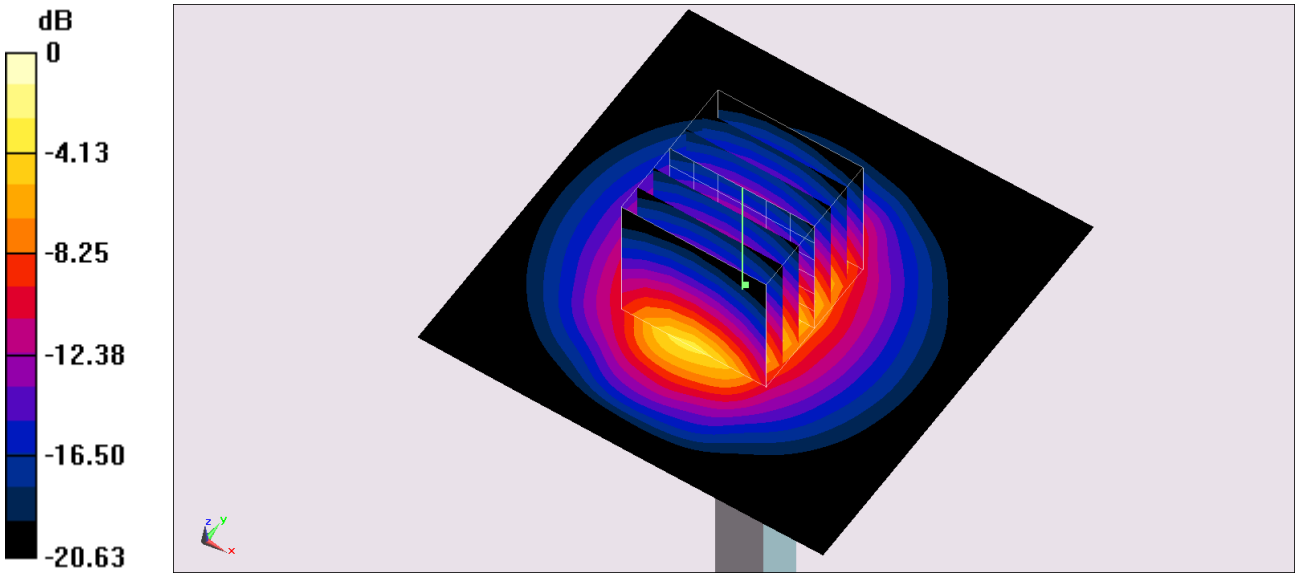

0 dB = 4.55 W/kg = 6.58 dBW/kg

System Check_Head_2600MHz

DUT: D2600V2-1008

Communication System: CW; Frequency: 2600 MHz;Duty Cycle: 1:1
Medium: HSL_2600_201007 Medium parameters used: f = 2600 MHz; σ = 1.938 S/m; ε_r = 38.865; ρ = 1000 kg/m^3
Ambient Temperature：23.7 ℃; Liquid Temperature：22.7 ℃

DASY5 Configuration
- Probe: EX3DV4 - SN7306; ConvF(7.34, 7.34, 7.34) @ 2600 MHz; Calibrated: 2020/7/24
- Sensor-Surface: 1.4mm (Mechanical Surface Detection)
- Electronics: DAE4 Sn1399; Calibrated: 2020/2/18
- Phantom: ELI v4.0; Type: QDOVA001BB; Serial: 1029
- Measurement SW: DASY52, Version 52.10 (4); SEMCAD X Version 14.6.14 (7483)

Pin=250mW/Area Scan (61x61x1): Interpolated grid: dx=1.200 mm, dy=1.200 mm
Maximum value of SAR (interpolated) = 26.7 W/kg

Pin=250mW/Zoom Scan (7x7x7)/Cube 0: Measurement grid: dx=5mm, dy=5mm, dz=5mm
Reference Value = 115.0 V/m; Power Drift = -0.14 dB
Peak SAR (extrapolated) = 33.6 W/kg
SAR(1 g) = 14.6 W/kg; SAR(10 g) = 6.35 W/kg
Maximum value of SAR (measured) = 25.9 W/kg

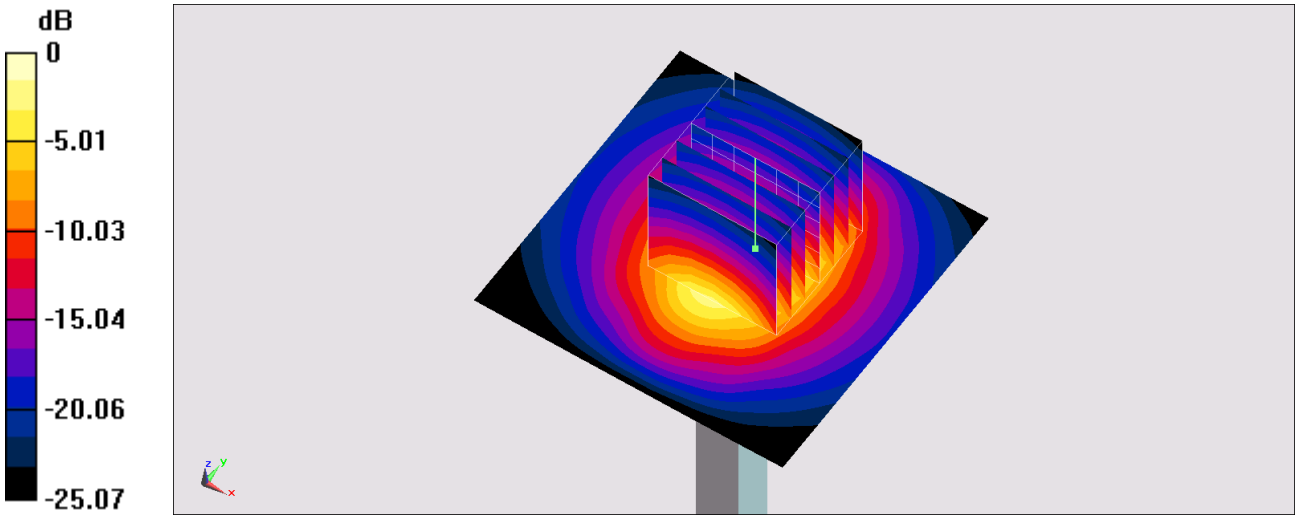

0 dB = 26.7 W/kg = 14.27 dBW/kg

System Check_Head_2600MHz

DUT: D2600V2-1008

Communication System: CW; Frequency: 2600 MHz;Duty Cycle: 1:1
Medium: HSL_2600_201007 Medium parameters used: f = 2600 MHz; σ = 1.938 S/m; ε_r = 38.865; ρ = 1000 kg/m^3
Ambient Temperature：23.7 ℃; Liquid Temperature：22.7 ℃

DASY5 Configuration
- Probe: ES3DV3 - SN3115; ConvF(4.44, 4.44, 4.44) @ 2600 MHz; Calibrated: 2020/1/3
- Sensor-Surface: 3mm (Mechanical Surface Detection)
- Electronics: DAE4 Sn778; Calibrated: 2020/6/4
- Phantom: ELI v4.0; Type: QDOVA001BB; Serial: 1029
- Measurement SW: DASY52, Version 52.10 (4); SEMCAD X Version 14.6.14 (7483)

Pin=50mW/Area Scan (71x71x1): Interpolated grid: dx=1.200 mm, dy=1.200 mm
Maximum value of SAR (interpolated) = 3.72 W/kg

Pin=50mW/Zoom Scan (7x7x7)/Cube 0: Measurement grid: dx=5mm, dy=5mm, dz=5mm
Reference Value = 44.99 V/m; Power Drift = -0.02 dB
Peak SAR (extrapolated) = 5.94 W/kg
SAR(1 g) = 2.7 W/kg; SAR(10 g) = 1.2 W/kg
Maximum value of SAR (measured) = 3.63 W/kg

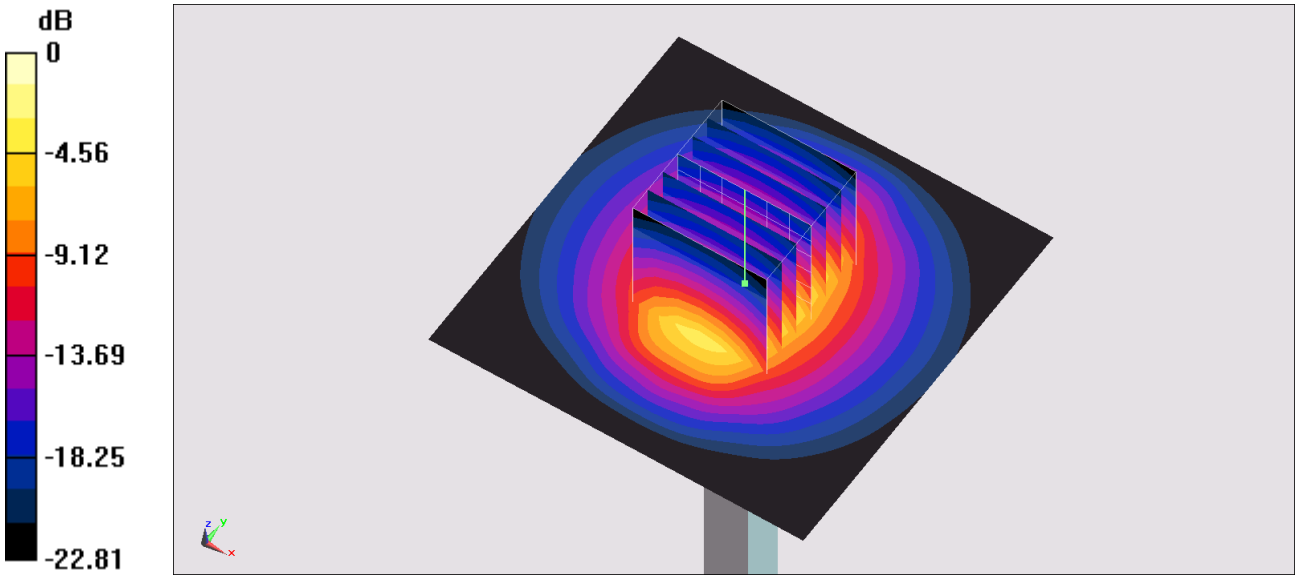

0 dB = 3.63 W/kg = 5.60 dBW/kg

System Check_Head_2600MHz

DUT: D2600V2-1008

Communication System: CW; Frequency: 2600 MHz;Duty Cycle: 1:1
Medium: HSL_2600_201014 Medium parameters used: f = 2600 MHz; σ = 1.995 S/m; ε_r = 38.566; ρ = 1000 kg/m^3
Ambient Temperature：23.4 ℃; Liquid Temperature：22.4 ℃

DASY5 Configuration
- Probe: EX3DV4 - SN3642; ConvF(6.95, 6.95, 6.95) @ 2600 MHz; Calibrated: 2020/4/29
- Sensor-Surface: 1.4mm (Mechanical Surface Detection)
- Electronics: DAE4 Sn1311; Calibrated: 2020/8/25
- Phantom: ELI v4.0; Type: QDOVA001BB; Serial: 1029
- Measurement SW: DASY52, Version 52.10 (4); SEMCAD X Version 14.6.14 (7483)

Pin=250mW/Area Scan (71x71x1): Interpolated grid: dx=1.200 mm, dy=1.200 mm
Maximum value of SAR (interpolated) = 21.7 W/kg

Pin=250mW/Zoom Scan (7x7x7)/Cube 0: Measurement grid: dx=5mm, dy=5mm, dz=5mm
Reference Value = 113.7 V/m; Power Drift = -0.06 dB
Peak SAR (extrapolated) = 30.0 W/kg
SAR(1 g) = 14.5 W/kg; SAR(10 g) = 6.64 W/kg
Maximum value of SAR (measured) = 24.3 W/kg

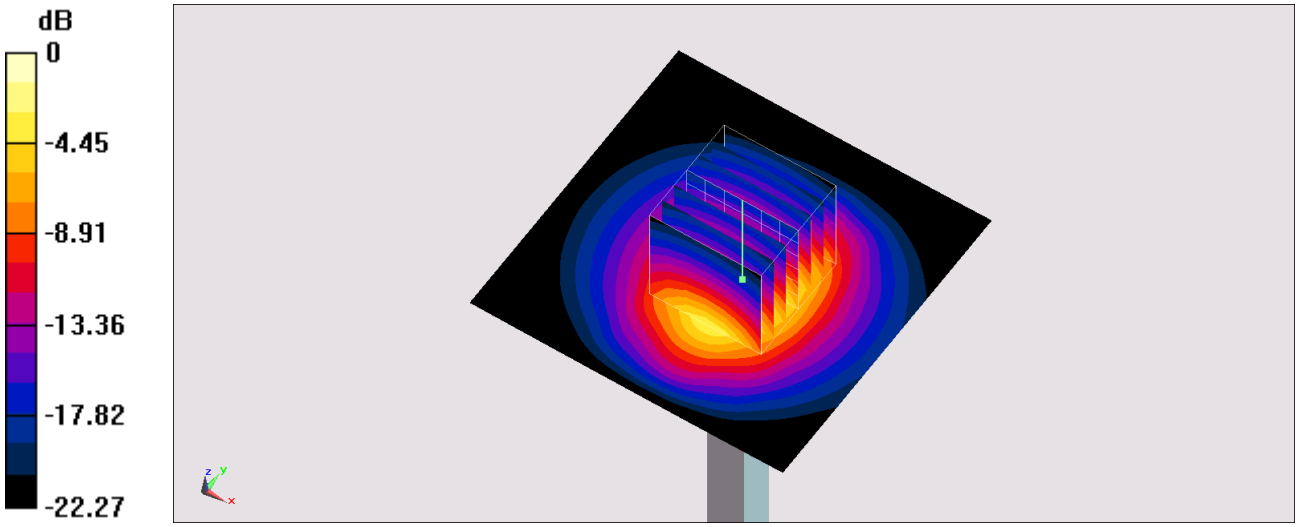

0 dB = 24.3 W/kg = 13.86 dBW/kg

System Check_Head_3500MHz

DUT: D3500V2 -1014

Communication System: CW; Frequency: 3500 MHz;Duty Cycle: 1:1
Medium: HSL_3500_201009 Medium parameters used: f = 3500 MHz; σ = 2.936 S/m; ε_r = 37.527; ρ = 1000 kg/m^3
Ambient Temperature：23.5 ℃; Liquid Temperature：22.5 ℃

DASY5 Configuration:
- Probe: EX3DV4 - SN3642;ConvF(6.6, 6.6, 6.6) @ 3500 MHz;Calibrated: 2020/4/29
- Sensor-Surface: 1.4mm (Mechanical Surface Detection)
- Electronics: DAE4 Sn1311; Calibrated: 2020/8/25
- Phantom: ELI v4.0_Mid; Type: QDOVA001AA; Serial: TP:1131
- Measurement SW: DASY52, Version 52.10 (4);SEMCAD X Version 14.6.14 (7483)

Pin=100mW/Area Scan (71x71x1): Interpolated grid: dx=1.200 mm, dy=1.200 mm
Maximum value of SAR (interpolated) = 12.6 W/kg

Pin=100mW/Zoom Scan (7x7x7)/Cube 0: Measurement grid: dx=5mm, dy=5mm, dz=1.4mm
Reference Value = 70.09 V/m; Power Drift = -0.06 dB
Peak SAR (extrapolated) = 17.7 W/kg
SAR(1 g) = 6.48 W/kg; SAR(10 g) = 2.41 W/kg
Maximum value of SAR (measured) = 12.9 W/kg

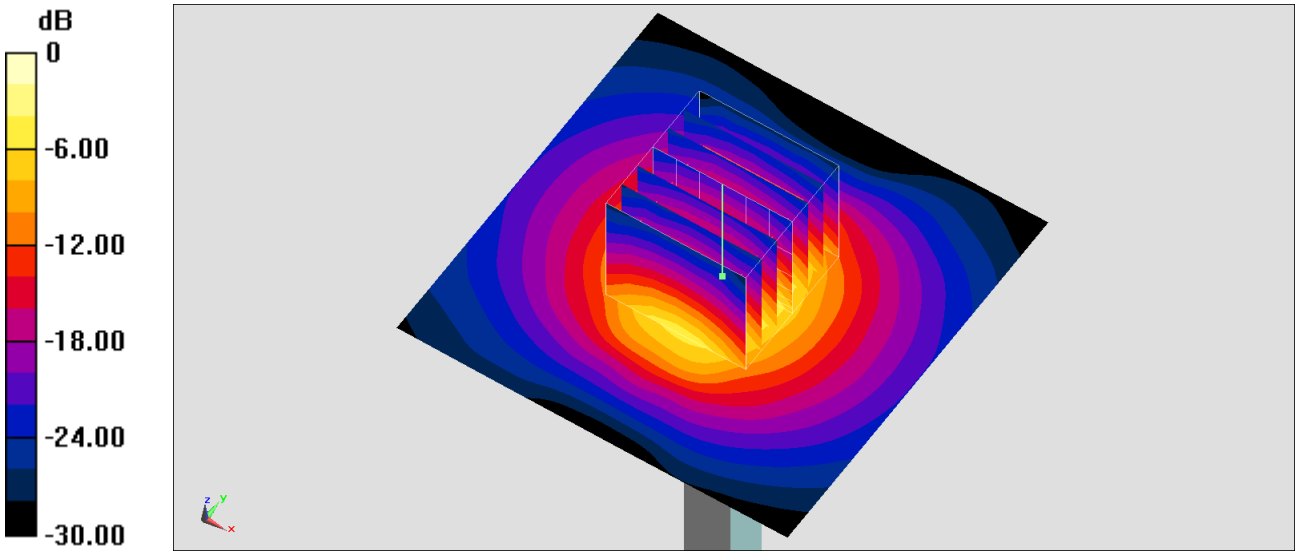

0 dB = 12.6 W/kg = 11.00 dBW/kg

System Check_Head_3700MHz

DUT: D3700V2-1006

Communication System: CW ; Frequency: 3700 MHz;Duty Cycle: 1:1
Medium: HSL_3700_201009 Medium parameters used: f = 3700 MHz; σ = 3.121 S/m; ε_r = 37.228; ρ = 1000 kg/m^3
Ambient Temperature：23.5 ℃; Liquid Temperature：22.5 ℃

DASY5 Configuration
- Probe: EX3DV4 - SN3642; ConvF(6.45, 6.45, 6.45) @ 3700 MHz; Calibrated: 2020/4/29
- Sensor-Surface: 1.4mm (Mechanical Surface Detection)
- Electronics: DAE4 Sn1311; Calibrated: 2020/8/25
- Phantom: ELI v4.0_Mid; Type: QDOVA001AA; Serial: TP:1131
- Measurement SW: DASY52, Version 52.10 (4); SEMCAD X Version 14.6.14 (7483)

Pin=100mW/Area Scan (71x71x1): Interpolated grid: dx=1.200 mm, dy=1.200 mm
Maximum value of SAR (interpolated) = 12.6 W/kg

Pin=100mW/Zoom Scan (7x7x7)/Cube 0: Measurement grid: dx=5mm, dy=5mm, dz=1.4mm
Reference Value = 65.68 V/m; Power Drift = -0.04 dB
Peak SAR (extrapolated) = 18.0 W/kg
SAR(1 g) = 6.38 W/kg; SAR(10 g) = 2.3 W/kg
Maximum value of SAR (measured) = 13.0 W/kg

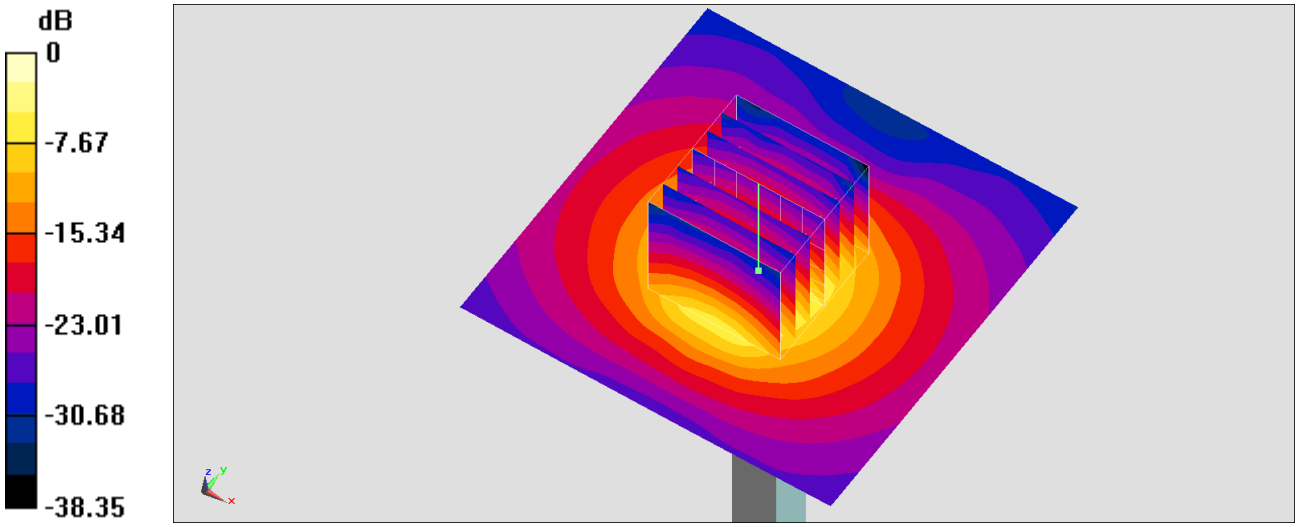

0 dB = 13.0 W/kg = 11.14 dBW/kg