CERTIFICATE #3478.01

TEST REPORT

EUT Description	**Tablet**
Brand Name	**HP**
Model Name	**HSN-C11C**
FCC ID	**FCC ID: B94HNC11CPD**
Date of Test Start/End	**2020-11-27 / 2020-12-10**
Features	**WWAN (LTE, UMTS), WLAN, BT** (see section 6)
Description	**Platform: HSN-C11C + INPAQ antenna**

Applicant	**HP Inc.**
Address	**1501 Page Mill Road, Palo Alto CA 94304 USA**
Contact Person	**Sam Lin**
Telephone/Fax/ Email	**+886 2 37896331/sam.lin2@hp.com**

Reference Standards	**FCC 47 CFR Part §2.1093** (see section 1)	
RF Exposure Environment	**Portable devices - General population/uncontrolled exposure**	
Exposure Conditions	**Body worn**	
	SAR Result	SAR Limit
Maximum SAR Result & Limit	**1.44 W/kg (1g)**	**1.6 W/kg (1g)**
Min. test separation distance	**0mm to phantom, 1.95mm to antenna edge**	

Test Report identification	**201124-01.TR02**
Revision Control	**Rev. 01** **This test report revision replaces any previous test report revision** (see section 9)

The test results relate only to the samples tested.
The test report shall not be reproduced, except in full, without written approval of the laboratory.
Reference to accreditation shall be used only by full reproduction of test report.

Issued by	Reviewed by
Digitally signed by Vaso Kaculini Date: 2021-01-19 12:06:20	Olivier FARGANT cn=Olivier FARGANT, o=Intel Corporation, ou, email=olivier.fargant@intel.com, c=FR 2021.01.19 16:43:53 +01'00'
Vaso Kaculini (Test Engineer Lead)	Olivier FARGANT (Technical Officer)

Intel Corporation S.A.S – WRF Lab
425 rue de Goa – Le Cargo B6 - 06600 Antibes, France
Tel. +33493001400 / Fax +33493001401

Table of Contents

1. Standards, reference documents and applicable test methods 4

2. General conditions, competences and guarantees 4

3. Preface 5

4. Environmental Conditions 6

5. Test samples 6

6. EUT Features 7

7. Remarks and comments 12

8. Test Verdicts summary 12

9. Document Revision History 12

Annex A. Test & System Description 13

A.1 SAR DEFINITION 13

A.2 SPEAG SAR MEASUREMENT SYSTEM 14

A.2.1 SAR Measurement Setup 14

A.2.2 E-Field Measurement Probe 15

A.2.3 SAM Phantom 15

A.2.4 Flat Phantom 16

A.2.5 Device Positioner 16

A.3 DATA EVALUATION 17

A.4 SYSTEM AND LIQUID CHECK 19

A.4.1 System Check 19

A.4.2 Liquid Check 20

A.5 TEST EQUIPMENT LIST 21

A.5.1 SAR System #2 21

A.5.2 Shared Instrumentation 22

A.5.3 Tissue Simulant Liquid 22

A.6 MEASUREMENT UNCERTAINTY EVALUATION 23

A.7 RF EXPOSURE LIMITS 25

Annex B. Test Results 26

B.1 TEST CONDITIONS 26

B.1.1 Test SAR Test positions relative to the phantom 26

B.1.2 Test signal, Output power and Test Frequencies 27

B.1.3 Evaluation Exclusion and Test Reductions 28

B.2 CONDUCTED POWER MEASUREMENTS – TABLET MODE 32

B.2.1 WCDMA/ HSPA/ DC-HSPA 32

B.2.2 LTE 35

B.3 TISSUE PARAMETERS MEASUREMENT 56

B.4 SYSTEM CHECK MEASUREMENTS 56

B.5 SAR TEST RESULTS 57

B.5.1 WCDMA 57

B.5.2 LTE 58

B.5.3 SAR Measurement Variability 62

B.5.4 Simultaneous Transmission SAR Evaluation 63

Annex C. Test System Plots 65

Annex D. TSL Dielectric Parameters 87

D.1 BODY 600MHZ-900MHZ 87

D.2 BODY 1700MHZ-2000MHZ 89

D.3 BODY 2300MHZ-2700MHZ 91
Annex E. Calibration Certificates 93
Annex F. Photographs 95
F.1 TEST SAMPLE 95
F.2 TEST POSITIONS 96
F.3 ANTENNA HOST PLATFORM LOCATION AND ADJACENT EDGE POSITIONS RELATIVE TO THE BODY 97
F.4 PHANTOM LIQUID LEVEL DURING MEASUREMENTS 98

1. Standards, reference documents and applicable test methods

FCC	1. FCC Title 47 CFR Part §2.1093 – Radiofrequency radiation exposure evaluation: portable devices. 2019-10-01 Edition 2. FCC OET KDB 447498 D01 v06 – RF Exposure Procedures and Equipment Authorization Policies for Mobile and Portable Devices. 3. FCC OET KDB 616217 D04 v01r02 – SAR Evaluation Considerations for Laptop, Notebook, Netbook and Tablet Computers. 4. FCC OET KDB 865664 D01 v01r04 – SAR Measurement Requirements for 100 MHz to 6 GHz. 5. FCC OET KDB 865664 D02 v01r02 – RF Exposure Compliance Reporting and Documentation Considerations. 6. FCC OET KDB 941225 D05 v02r05 – SAR Evaluation Considerations for LTE Devices. 7. FCC OET KDB 941225 D01 v03r01 – 3G SAR Measurement Procedures. 8. IEEE Std 1528-2013 – IEEE Recommended Practice Determining the Peak Spatial-Average Specific Absorption Rate (SAR) in the Human Head from Wireless Communication Devices: Measurement Techniques…

2. General conditions, competences and guarantees

- ✓ Intel Corporation SAS Wireless RF Lab (Intel WRF Lab) is an ISO/IEC 17025:2017 laboratory accredited by the American Association for Laboratory Accreditation (A2LA) with the certificate number 3478.01.
- ✓ Intel Corporation SAS Wireless RF Lab (Intel WRF Lab) is an Accredited Test Firm recognized by the FCC, with Designation Number FR0011.
- ✓ Intel WRF Lab declines any responsibility with respect to the identified information provided by the customer and that may affect the validity of results.
- ✓ Intel WRF Lab only provides testing services and is committed to providing reliable, unbiased test results and interpretations.
- ✓ Intel WRF Lab is liable to the client for the maintenance of the confidentiality of all information related to the item under test and the results of the test.
- ✓ Intel WRF Lab has developed calibration and proficiency programs for its measurement equipment to ensure correlated and reliable results to its customers.
- ✓ This report is only referred to the item that has undergone the test.
- ✓ This report does not imply an approval of the product by the Certification Bodies or competent Authorities.
- ✓ Complete or partial reproduction of the report cannot be made without written permission of Intel WRF Lab.

3. Preface

The HSN-C11C Tablet includes the Time Averaging SAR (TAS) concept. The TAS algorithm is implemented in the Intel XMM 7360 Cellular Modem, which is incorporated in the HSN-C11C (FCC ID: ZMOL850GL).

The implementation details and TAS operating characteristics are described in a separated document [1]. The validation of algorithm operations is performed by Intel Corporation according to the range of commonly used accessible control parameters used for typical host products. The validation results are reported in document [2].

The FCC SAR limit is a time averaged exposure metric. At host level, the normally required SAR test procedures are applicable for SAR compliance testing at upper-threshold values of the algorithm, which is the maximum output power level for continuous time-averaging operations TAS algorithm enforces. The reliability of this has been demonstrated by results in the Algorithm Validation Test Report [2].

The model supports simultaneous transmission of WWAN, BT and WLAN. The TAS algorithm is only applied to WWAN cellular module. The WLAN / BT SAR evaluation is presented in the document [3].

The SAR evaluation of WWAN is performed in this report as well as the RF exposure assessment for simultaneous transmission of WWAN, WLAN and BT.

[1] 190214_TAS_Operational_Report_XMM7360_KDB_Rev04

[2] 171110-01.TR02 - TAS_Validation_report_Rev02

[3] 201124-01.TR01 - HP HSN-C11C SAR WLAN wAX201D2W

4. Environmental Conditions

✓ At the site where the measurements were performed the following limits were not exceeded during the tests:

Temperature	20.5ºC ± 2ºC
Humidity	50% ± 20%
Liquid Temperature	20ºC ± 2ºC

5. Test samples

Sample	Control #	Description	Model	Serial #	Date of receipt
#01	201124-01.S03	Tablet	HSN-C11C	HSN-C11C (3)	2020-11-27

6. EUT Features

The herein information is provided by the customer

Brand Name	HP
Model Name	HSN-C11C
Software Version	-
Driver Version	-
Prototype / Production	Production
Host Identification	HSN-C11C
Exposure Conditions	Body worn

Supported radios

The module is a data only DUT supporting UMTS and LTE, without carrier aggregation. The applicable frequency bands and operating modes are identified in the following table, where North America bands are shown in bold.

WWAN:

Mode	Bands	Supported Tx Mode			
		WCDMA	HSDPA	HSUPA	DC-HSDPA
WCDMA / HSPA+ (UL Cat6)	FDD I (1920.0 – 1980.0 MHz)	✓	✓	✓	✓
	FDD II (1850.0 – 1910.0 MHz)	✓	✓	✓	✓
	FDD IV (1710.0 – 1755.0 MHz)	✓	✓	✓	✓
	FDD V (824.0 – 849.0 MHz)	✓	✓	✓	✓
	FDD VIII (880.0 – 915.0 MHz)	✓	✓	✓	✓

FDD/TDD	Band	Modulation	Bandwidth					
			1.4	3	5	10	15	20
LTE FDD (UL Cat9)	Band 1 (1920.0 – 1980.0 MHz)	QPSK/16QAM			✓	✓	✓	✓
	Band 2 (1850.0 – 1910.0 MHz)	QPSK/16QAM	✓	✓	✓	✓	✓	✓
	Band 3 (1710.0 – 1785.0 MHz)	QPSK/16QAM	✓	✓	✓	✓	✓	✓
	Band 4 (1710.0 – 1755.0 MHz)	QPSK/16QAM	✓	✓	✓	✓	✓	✓
	Band 5 (824.0 – 849.0 MHz)	QPSK/16QAM	✓	✓	✓	✓		
	Band 7 (2500.0 – 2570.0 MHz)	QPSK/16QAM			✓	✓	✓	✓
	Band 8 (880.0 – 915.0 MHz)	QPSK/16QAM	✓	✓	✓	✓		
	Band 11 (1427.9 – 1784.9 MHz)	QPSK/16QAM			✓	✓		
	Band 12 (699.0 – 716.0 MHz)	QPSK/16QAM	✓	✓	✓	✓		
	Band 13 (777.0 – 787.0 MHz)	QPSK/16QAM			✓	✓		
	Band 17 (704.0 – 716.0 MHz)	QPSK/16QAM			✓	✓		
	Band 18 (815.0 – 830.0 MHz)	QPSK/16QAM			✓	✓	✓	
	Band 19 (830.0 – 845.0 MHz)	QPSK/16QAM			✓	✓	✓	
	Band 20 (832.0 – 862.0 MHz)	QPSK/16QAM			✓	✓	✓	
	Band 21 (1747.9 – 1462.9 MHz)	QPSK/16QAM			✓	✓	✓	
	Band 26 (814.0 – 849.0 MHz)	QPSK/16QAM	✓	✓	✓	✓	✓	
	Band 28 (703.0 – 748.0 MHz)	QPSK/16QAM		✓	✓	✓	✓	✓
	Band 30 (2305.0 – 2315.0 MHz)	QPSK/16QAM			✓	✓		
	Band 66 (1710.0 – 1780.0 MHz)	QPSK/16QAM	✓	✓	✓	✓	✓	✓
LTE TDD (UL Cat9)	**Band 38 (2570.0 – 2620.0 MHz)**	QPSK/16QAM			✓	✓	✓	✓
	Band 39 (1880.0 – 1920.0 MHz)	QPSK/16QAM			✓	✓	✓	✓
	Band 40 (2300.0 – 2400.0 MHz)	QPSK/16QAM			✓	✓	✓	✓
	Band 41 (2496.0 – 2690.0 MHz)	QPSK/16QAM			✓	✓	✓	✓

WLAN

Mode	UL Freq Range
802.11b/g/n/ax	2.4GHz (2400.0 – 2483.5 MHz)
802.11a/n/ac/ax	5.2GHz (5150.0 – 5250.0 MHz) 5.3GHz (5250.0 – 5350.0 MHz) 5.6GHz (5470.0 – 5725.0 MHz) 5.8GHz (5725.0 – 5825.0 MHz)
Bluetooth & BLE v5.1	2.4GHz (2400.0 – 2483.5 MHz)

Antenna Information "information provided by the applicant"

The DUT has 1 WWAN TX antenna:

- WWAN Main Tx1 Antenna: INPAQ, PIFA antenna.
  P/N : WA-P-LTE15-02-001 (DC330029D20)

See Annex *F* for more details on antennas location.

Simultaneous Transmission Configurations

WWAN Main + WLAN 2.4GHz Main + BT Aux
WWAN Main + WLAN 2.4GHz Main + WLAN 2.4GHz Aux
WWAN Main + WLAN 5GHz Main + BT Aux
WWAN Main + WLAN 5GHz Main + WLAN 5GHz Aux
WWAN Main + WLAN 5GHz Main + WLAN 5GHz Aux + BT Aux

WLAN transmitter is considered in this report just for the simultaneous transmission evaluation with the WWAN module (See section B.5.4)

Additional information

- 5.60-5.65 GHz band (TDWR) is supported by the device
- Band gap is supported by the device
- Two different power settings are implemented in the DUT:
  - Max power for Notebook mode
  - Reduced power for Tablet mode
- The DUT does not support VoLTE, so Head Exposure is not considered for LTE and WCDMA modes. Maximum Power Reduction (MPR) is implemented according to 3GPP, and it is a permanent feature, built-in by design:

Modulation	**Channel bandwidth / #RB**						**MPR (dB)**
	1.4 MHz	**3.0 MHz**	**5 MHz**	**10 MHz**	**15 MHz**	**20 MHz**	
QPSK	> 5	> 4	> 8	> 12	> 16	> 18	≤ 1
16 QAM	≤ 5	≤ 4	≤ 8	≤ 12	≤ 16	≤ 18	≤ 1
16 QAM	> 5	> 4	> 8	> 12	> 16	> 18	≤ 2
64 QAM	≤ 5	≤ 4	≤ 8	≤ 12	≤ 16	≥18	≤ 2
64 QAM	> 5	> 4	> 8	> 12	>16	>18	≤ 3
256 QAM	≥1						≤ 5

A-MPR (additional MPR) was disabled during SAR testing

Documents

Filename	Date of receipt
-	
-	
-	

Low, Middle and High channel and frequency number for LTE

LTE BAND	BANDWIDTH	FREQ (MHZ)	CHANNEL #
LTE2	20 MHz	1860.00	18700
		1880.00	18900
		1900.00	19100
	15 MHz	1857.50	18675
		1880.00	18900
		1902.50	19125
	10 MHz	1855.00	18650
		1880.00	18900
		1905.00	19150
	5.0 MHz	1852.50	18625
		1880.00	18900
		1907.50	19175
	3.0 MHz	1851.50	18615
		1880.00	18900
		1908.50	19185
	1.4 MHz	1850.70	18607
		1880.00	18900
		1909.30	19193
LTE4	20 MHz	1720.00	20050
		1732.50	20175
		1745.00	20300
	15 MHz	1717.50	20025
		1732.50	20175
		1747.50	20325
	10 MHz	1715.00	20000
		1732.50	20175
		1750.00	20350
	5.0 MHz	1712.50	19975
		1732.50	20175
		1752.50	20375
	3.0 MHz	1711.50	19965
		1732.50	20175
		1753.50	20385
	1.4 MHz	1710.70	19957
		1732.50	20175
		1754.30	20393

LTE BAND	BANDWIDTH	FREQ (MHZ)	CHANNEL #
LTE5	10 MHz	829.00	20450
		836.50	20525
		844.00	20600
	5.0 MHz	826.50	20425
		836.50	20525
		846.50	20625
	3.0 MHz	825.50	20415
		836.50	20525
		847.50	20635
	1.4 MHz	824.70	20407
		836.50	20525
		848.30	20643
LTE7	20 MHz	2510.00	20850
		2535.00	21100
		2560.00	21350
	15 MHz	2507.50	20825
		2535.00	21100
		2562.50	21375
	10 MHz	2505.00	20800
		2535.00	21100
		2565.00	21400
	5.0 MHz	2502.50	20775
		2535.00	21100
		2567.50	21425
LTE12	10 MHz	707.50	23095
	5.0 MHz	701.50	23035
		707.50	23095
		713.50	23155
	3.0 MHz	700.50	23025
		707.50	23095
		714.50	23165
	1.4 MHz	699.70	23017
		707.50	23095
		715.30	23173

Low, Middle and High channel and frequency number for LTE

LTE BAND	BANDWIDTH	FREQ (MHZ)	CHANNEL #
LTE13	10 MHz	782.00	23230
	5.0 MHz	782.00	23230
LTE17	10 MHz	710.00	23790
	5.0 MHz	706.50	23755
		710.00	23790
		713.50	23825
LTE26	15 MHz	822.50	26775
		831.50	26865
		841.50	26965
	10 MHz	820.00	26750
		831.50	26865
		844.00	26990
	5.0 MHz	816.50	26715
		831.50	26865
		846.50	27015
	3.0 MHz	815.50	26705
		831.50	26865
		847.50	27025
	1.4 MHz	814.70	26697
		831.50	26865
		848.30	27033
LTE 30	10 MHz	2310.00	27710
	5.0 MHz	2310.00	27710
LTE38	20 MHz	2580.00	37850
		2595.00	38000
		2610.00	38150
	15 MHz	2577.50	37825
		2595.00	38000
		2612.50	38175
	10 MHz	2575.00	37800
		2595.00	38000
		2615.00	38200
	5.0 MHz	2572.50	37775
		2595.00	38000
		2617.50	38225

LTE BAND	BANDWIDTH	FREQ (MHZ)	CHANNEL #
LTE41	20 MHz	2506.00	39750
		2549.50	40185
		2593.00	40620
		2636.50	41055
		2680.00	41490
	15 MHz	2506.00	39750
		2549.50	40185
		2593.00	40620
		2636.50	41055
		2680.00	41490
	10 MHz	2506.00	39750
		2549.50	40185
		2593.00	40620
		2636.50	41055
		2680.00	41490
	5.0 MHz	2506.00	39750
		2549.50	40185
		2593.00	40620
		2636.50	41055
		2680.00	41490
LTE66	20 MHz	1720.00	132072
		1755.00	132422
		1770.00	132572
	15 MHz	1717.50	132047
		1755.00	132422
		1772.50	132597
	10 MHz	1715.00	132022
		1755.00	132422
		1775.00	132622
	5.0 MHz	1712.50	131997
		1755.00	132422
		1777.50	132647
	3.0 MHz	1711.50	131987
		1755.00	132422
		1778.50	132657
	1.4 MHz	1710.00	131979
		1755.00	132422
		1779.30	132665

The following table indicates the power levels and tolerance for each mode:

Maximum Output power specification + Tune up tolerance

Mode	Technology	Bands	Class	Nominal (dBm)	Tolerance dB	Lower Tolerance (dBm)	Upper Tolerance (dBm)
Tablet	WCDMA/HSPA	FDD II (1850.0 – 1910.0 MHz)	3	12.5	±1	11.5	13.5
Tablet	WCDMA/HSPA	FDD IV (1710.0 – 1755.0 MHz)	3	12	±1	11	13
Tablet	WCDMA/HSPA	FDD V (824.0 – 849.0 MHz)	3	20	±1	19	21
Tablet	LTE	Band 2 (1850.0 – 1910.0 MHz)	3	12.5	±1	11.5	13.5
Tablet	LTE	Band 4 (1710.0 – 1755.0 MHz)	3	11.5	±1	10.5	12.5
Tablet	LTE	Band 5 (824.0 – 849.0 MHz)	3	20.5	±1	19.5	21.5
Tablet	LTE	Band 7 (2500.0 – 2570.0 MHz)	3	13	±1	12	14
Tablet	LTE	Band 12 (699.0 – 716.0 MHz)	3	19	±1	18	20
Tablet	LTE	Band 13 (777.0 – 787.0 MHz)	3	21	±1	20	22
Tablet	LTE	Band 17 (704.0 – 716.0 MHz)	3	19	±1	18	20
Tablet	LTE	Band 26 (814.0 – 849.0 MHz)	3	21	±1	20	22
Tablet	LTE	Band 30 (2305.0 – 2315.0 MHz)	3	12.5	±1	11.5	13.5
Tablet	LTE	Band 38 (2570.0 – 2620.0 MHz)	3	15.5	±1	14.5	16.5
Tablet	LTE	Band 41 (2496.0 – 2690.0 MHz)	3	13.5	±1	12.5	14.5
Tablet	LTE	Band 66 (1710.0 – 1780.0 MHz)	3	12.5	±1	11.5	13.5

As mentioned in Section 3, the SAR compliance testing is performed at upper-threshold values of the algorithm, which is the maximum output power level for continuous time-averaging operations TAS algorithm enforces.
In TAS operation, the control parameters including the upper-threshold value are stored in NVM. They are inaccessible to the normal users and no other interface is available for changing these control parameters.
The table below shows the upper-threshold values used as continuous power for SAR testing as well as the different TAS parameters defined in [1] and [2] to be embedded in the host:

Mode	Technology	Bands	Class	Nominal Full Power (dBm)	Upper Threshold (dBm)	Lower Threshold (dBm)	DPR_ON Power (dBm)
Tablet	WCDMA/HSPA	FDD II (1850.0 – 1910.0 MHz)	3	23.5	12.5	11.5	10.5
Tablet	WCDMA/HSPA	FDD IV (1710.0 – 1755.0 MHz)	3	23.5	12	11	10
Tablet	WCDMA/HSPA	FDD V (824.0 – 849.0 MHz)	3	23.5	20	19	18
Tablet	LTE	Band 2 (1850.0 – 1910.0 MHz)	3	23.5	12.5	11.5	10.5
Tablet	LTE	Band 4 (1710.0 – 1755.0 MHz)	3	23	11.5	10.5	9.5
Tablet	LTE	Band 5 (824.0 – 849.0 MHz)	3	23	20.5	19.5	18.5
Tablet	LTE	Band 7 (2500.0 – 2570.0 MHz)	3	23	13	12	11
Tablet	LTE	Band 12 (699.0 – 716.0 MHz)	3	23	19	18	17
Tablet	LTE	Band 13 (777.0 – 787.0 MHz)	3	23	21	20	19
Tablet	LTE	Band 17 (704.0 – 716.0 MHz)	3	23	19	18	17
Tablet	LTE	Band 26 (814.0 – 849.0 MHz)	3	23	21	20	19
Tablet	LTE	Band 30 (2305.0 – 2315.0 MHz)	3	23	12.5	11.5	10.5
Tablet	LTE	Band 38 (2570.0 – 2620.0 MHz)	3	23	15.5	14.5	13.5
Tablet	LTE	Band 41 (2496.0 – 2690.0 MHz)	3	23	13.5	12.5	11.5
Tablet	LTE	Band 66 (1710.0 – 1780.0 MHz)	3	23	12.5	11.5	10.5

SAR compliance is demonstrated with the *Reported SAR*:

Reported SAR = measured 1gSAR @ Reported Upper Threshold < FCC SAR limit
Where, *Reported Upper Threshold = Upper Threshold (stored in NVM) + Tolerance*

7. Remarks and comments

1. Only the plots for the test positions with the highest measured SAR per band/mode are included in Annex C as required per FCC OET KDB 865664 D02, paragraph 2.3.h.
2. The WLAN / BT SAR evaluation considered in B.5.4 is taken from: 201124-01.TR01 - HP HSN-C11C SAR WLAN wAX201D2W

8. Test Verdicts summary

The statement of conformity to applicable standards in the table below are based on the measured values, without taking into account the measurement uncertainties.

Mode	Band (UL)	Highest Reported SAR (1g) (W/kg)	Verdict
WCDMA	FDD II (1850.0 – 1910.0 MHz)	1.08	P
	FDD IV (1710.0 – 1755.0 MHz)	0.76	P
	FDD V (824.0 – 849.0 MHz)	1.18	P
LTE FDD	Band 2 (1850.0 – 1910.0 MHz)	1.08	P
	Band 4 (1710.0 – 1755.0 MHz)	NM	NA
	Band 5 (824.0 – 849.0 MHz)	NM	NA
	Band 7 (2500.0 – 2570.0 MHz)	1.18	P
	Band 12 (699.0 – 716.0 MHz)	1.36	P
	Band 13 (777.0 – 787.0 MHz)	1.44	P
	Band 17 (704.0 – 716.0 MHz)	NM	NA
	Band 26 (814.0 – 849.0 MHz)	1.44	P
	Band 30 (2305.0 – 2315.0 MHz)	1.17	P
	Band 66 (1710.0 – 1780.0 MHz)	0.92	P
LTE TDD	Band 38 (2570.0 – 2620.0 MHz)	1.09	P
	Band 41 (2496.0 – 2690.0 MHz)	0.66	P

P: Pass
F: Fail
NM: Not Measured – The band is covered by another passing band with the same/higher tune-up power, same frequency range and same BW
NA: Not Applicable

According to the FCC OET KDB 690783 D01, this is the summary of the values for the Grant Listing:

Highest Reported SAR (1g) (W/kg)				
Exposure Condition	Equipment Class			
	PCE	DTS	DSS	U-NII
Body Worn	1.44	0.50	0.14	1.17
Simultaneous Tx	Sum-SAR: 3.24 SPLSR: 0.03	Sum-SAR: 2.30 SPLSR: 0.02	Sum-SAR: 3.24 SPLSR: 0.03	Sum-SAR: 3.24 SPLSR: 0.03

Considering the results of the performed test according to FCC 47CFR Part 2.1093 the item under test is IN COMPLIANCE with the requested specifications specified in Section1. Standards, reference documents and applicable test methods

9. Document Revision History

Revision #	Modified by	Revision Details
Rev. 00	V. Kaculini	First Issue
Rev. 01	V. Kaculini	Changed contact name in front page and other minor editorial changes

Annex A. Test & System Description

A.1 SAR Definition

Specific Absorption rate is defined as the time derivative of the incremental energy (dW) absorbed by (dissipated in) and incremental mass (dm) contained in a volume element (dV) of a given density (ρ).

$$SAR = \frac{d}{dt} \cdot \left(\frac{dW}{dm}\right) = \frac{d}{dt} \cdot \left(\frac{dW}{\rho \cdot dV}\right)$$

SAR is expressed in units of watts per kilogram (W/kg). SAR can be related to the electric field at a point by

$$SAR = \frac{\sigma |E|^2}{\rho}$$

Where:

σ = Conductivity of the tissue (S/m)
ρ = Mass density of the tissue (kg/m3)
E = RMS electric field strength (V/m)

A.2 SPEAG SAR Measurement System

A.2.1 SAR Measurement Setup

The DASY6 system for performing compliance tests consists of the following items:

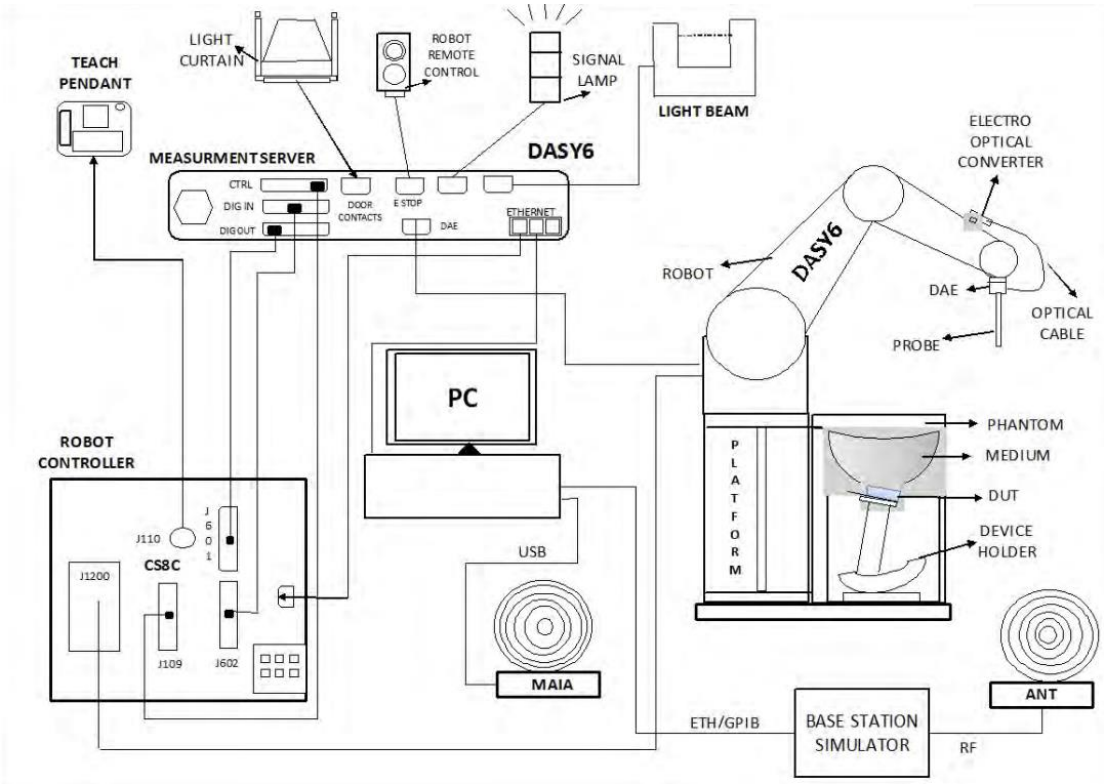

- ✓ A standard high precision 6-axis robot (Staübli TX/RX family) with controller, teach pendant and software. It includes an arm extension for accommodating the data acquisition electronics (DAE)
- ✓ An isotropic field probe optimized and calibrated for the targeted measurements.
- ✓ A data acquisition electronics (DAE) which performs the signal amplification, signal multiplexing, AD-conversion, offset measurements, mechanical surface detection, collision detection, etc. The unit is battery powered with standard or rechargeable batteries. The signal is optically transmitted to the EOC.
- ✓ The Electro-optical Converter (EOC) performs the conversion from optical to electrical signals for the digital communication to the DAE. The EOC signal is transmitted to the measurement server.
- ✓ The function of the measurement server is to perform the time critical tasks such as signal filtering, control of the robot operation and fast movements interrupts.
- ✓ The Light Beam used is for probe alignment. This improves the (absolute) accuracy of the probe positioning.
- ✓ A computer running Win7 professional operating system and the DASY6 software.
- ✓ Remote control and teach pendant as well as additional circuitry for robot safety such as warning lamps, etc.
- ✓ The phantom, the device holder and other accessories according to the targeted measurement.
- ✓ MAIA is a hardware interface (Antenna) used to evaluate the modulation and audio interference characteristics of RF signals.
- ✓ ANT is an ultra-wideband antenna for use with the base station simulators over 698 MHz to 6GHz.
- ✓ The base station simulator is an equipment used for SAR cellular tests in order to emulate the cellular signals characteristics and behavior between a regular base station and the equipment under test.
- ✓ Tissue simulating liquid.
- ✓ System Validation dipoles.
- ✓ Network emulator or RF test tool.

A.2.2 E-Field Measurement Probe

The probe is constructed using three orthogonal dipole sensors arranged on an interlocking, triangular prism core. The probe has built-in shielding against static charges and is contained within a PEEK cylindrical enclosure material at the tip.

The probe's characteristics are:

Frequency Range	30MHz – 6GHz
Length	337 mm
Probe tip external diameter	2.5 mm
Typical distance between dipoles and the probe tip	1 mm
Axial Isotropy (in human-equivalent liquids)	±0.3 dB
Hemispherical Isotropy (in human-equivalent liquids)	±0.5 dB
Linearity	±0.2 dB
Maximum operating SAR	100 W/kg
Lower SAR detection threshold	0.001 W/kg

A.2.3 SAM Phantom

The shell corresponds to the specifications of the Specific Anthropomorphic Mannequin (SAM) phantom defined in IEEE 1528 and IEC 62209-1. It enables the dosimetric evaluation of left and right hand phone usage as well as body mounted usage at the flat phantom region. A cover prevents evaporation of the liquid. Reference markings on the phantom allow the complete setup of all predefined phantom positions and measurement grids by teaching three points with the robot.

The phantom's characteristics are:

Material	Vinylester, glass fiber reinforced (VE-GF)
Shell thickness	2 mm ± 0.2 mm
Shell thickness at ERP	6 ± 0.2 mm
Filling volume	25 Liters
Dimensions	Length: 1000mm / Width: 500mm

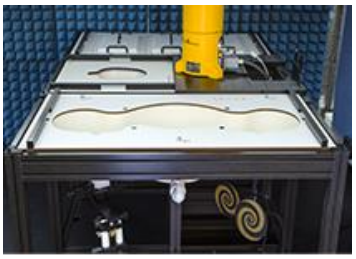

A.2.4 Flat Phantom

Phantom for compliance testing of handheld and body-mounted wireless devices in the frequency range of 30 MHz to 6 GHz. ELI is fully compatible with the IEC 62209-2 standard and all known tissue simulating liquids. ELI has been optimized regarding its performance and can be integrated into our standard phantom tables. A cover prevents evaporation of the liquid. Reference markings on the phantom allow installation of the complete setup, including all predefined phantom positions and measurement grids, by teaching three points. The phantom is compatible with all SPEAG dosimetric probes and dipoles.

The phantom's characteristics are:

Material	Vinylester, glass fiber reinforced (VE-GF)
Shell thickness	2 mm ± 0.2 mm
Filling volume	30 Liters approx.
Dimensions	Major axis: 600mm / Minor axis: 400mm

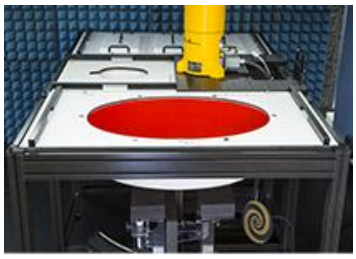

A.2.5 Device Positioner

The SAR in the phantom is approximately inversely proportional to the square of the distance between the source and the liquid surface. For a source at 5 mm distance, a positioning uncertainty of 0.5 mm would produce a SAR uncertainty of 20%. Accurate device positioning is therefore crucial for accurate and repeatable measurements. The positions in which the devices must be measured are defined by the standards.

The DASY device holder is designed to cope with the different positions given in the standard. It has two scales for device rotation (with respect to the body axis) and device inclination (with respect to the line between the ear reference points). The rotation center for both scales is the ear reference point (ERP). Thus the device needs no repositioning when changing the angles.

The DASY device holder is constructed of low-loss POM material having the following dielectric parameters: relative permittivity ε=3 and loss tangent δ=0.02. The amount of dielectric material has been reduced in the closest vicinity of the device, since measurements have suggested that the influence of the clamp on the test results could thus be lowered.

A simple but effective and easy-to-use extension for the Mounting Device; facilitates testing of larger devices according to IEC 62209-2 (e.g., laptops, cameras, etc.); lightweight and fits easily on the upper part of the Mounting Device in place of the phone positioner. The extension is fully compatible with the Twin SAM, ELI and other Flat Phantoms.

A.3 Data Evaluation

- **Power Reference measurement**

The robot measures the E field in a specified reference position that can be either the selected section's grid reference point or a user point in this section at 4mm of the inner surface of the phantom, 2mm for frequencies above 3GHz.

- **Area Scan**

Measurement procedures for evaluating SAR from wireless handsets typically start with a coarse measurement grid to determine the approximate location of the local peak SAR values. This is known as the area-scan procedure. The SAR distribution is scanned along the inside surface of one side of the phantom head, at least for an area larger than the projection of the handset and antenna. The distance between the measured points and phantom surface should be less than 8 mm, and should remain constant (with variation less than ± 1 mm) during the entire scan in order to determine the locations of the local peak SAR with sufficient accuracy. The angle between the probe axis and the surface normal line is recommended but not required to be less than 30°. If this angle is larger than 30° and the closest point on the probe-tip housing to the phantom surface is closer than a probe diameter, the boundary effect may become larger and polarization dependent. This additional uncertainty needs to be analyzed and accounted for. To achieve this, modified test procedures and additional uncertainty analyses not described in this recommended practice may be required. The measurement and interpolation point spacing should be chosen such as to allow identification of the local peak locations to within one-half of the linear dimension of a side of the zoom-scan volume. Because a local peak having specific amplitude and steep gradients may produce a lower peak spatial-average SAR compared to peaks with slightly lower amplitude and less steep gradients, it is necessary to evaluate these other peaks as well. However, since the spatial gradients of local SAR peaks are a function of the wavelength inside the tissue-equivalent liquid and the incident magnetic field strength, it is not necessary to evaluate local peaks that are less than 2 dB or more below the global maximum peak. Two-dimensional spline algorithms (Brishoual et al. 2001; Press et al., 1996) are typically used to determine the peaks and gradients within the scanned area. If a peak is found at a distance from the scan border of less than one-half the edge dimension of the desired 1 g or 10 g cube, the measurement area should be enlarged if possible.

- **Zoom Scan**

To evaluate the peak spatial-average SAR values for 1 g or 10 g cubes, fine resolution volume scans, called zoom scans, are performed at the peak SAR locations identified during the area scan. The minimum zoom scan volume size should extend at least 1.5 times the edge dimension of a 1 g cube in all directions from the center of the scan volume, for both 1 g and 10 g peak spatial-average SAR evaluations. Along the phantom curved surfaces, the front face of the volume facing the tissue/liquid interface conforms to the curved boundary, to ensure that all SAR peaks are captured. The back face should be equally distorted to maintain the correct averaging mass. The flatness and orientation of the four side faces are unchanged from that of a cube whose orientation is within ± 30° of the line normal to the phantom at the center of the cube face next to the phantom surface. The peak local SAR locations that were determined in the area scan (interpolated values) should be used for the centers of the zoom scans. If a scan volume cannot be centered due to proximity of a phantom shape feature, the probe should be tilted to allow scan volume enlargement. If probe tilt is not feasible, the zoom-scan origin may be shifted, but not by more than half of the 1 g or 10 g cube edge dimension.

After the zoom-scan measurement, extrapolations from the closest measured points to the surface, for example along lines parallel to the zoom-scan centerline, and interpolations to a finer resolution between all measured and extrapolated points are performed. Extrapolation algorithm considerations are described in 6.5.3, and 3-D spline methods (Brishoual et al., 2001; Kreyszig, 1983; Press et al., 1996) can be used for interpolation. The peak spatial-average SAR is finally determined by a numerical averaging of the local SAR values in the interpolation grid, using for example a trapezoidal algorithm for the integration (averaging).

In some areas of the phantom, such as the jaw and upper head regions, the angle of the probe with respect to the line normal to the surface may be relatively large, e.g., greater than ± 30º, which could increase the boundary effect error to a larger level. In these cases, during the zoom scan a change in the orientation of the probe, the phantom, or both is recommended but not required for the duration of the zoom scan, so that the angle between the probe axis and the line normal to the surface is within 30º for all measurement points.

- **Power Drift measurement**

The robot re-measures the E-Field in the same reference location measured at the Power Reference. The drift measurement gives the field difference in dB from the first to the last reference reading. This allows a user to monitor the power drift of the device under test that must remain within a maximum variation of ±5%.

- **Post-processing**

The procedure for spatial peak SAR evaluation has been implemented according to the IEEE1528 and IEC 62209-1/2 standards. It can be conducted for 1g and 10g.

The software allows evaluations that combine measured data and robot positions, such as:

- ✓ Maximum search
- ✓ Extrapolation
- ✓ Boundary correction
- ✓ Peak search for averaged SAR

Interpolation between the measured points is performed when the resolution of the grid is not fine enough to compute the average SAR over a given mass.

Extrapolation routines are used to obtain SAR values between the lowest measurement points and the inner phantom surface. The extrapolation is determined by the surface detection distance and the probe sensor offset. Several measurements at different distances are necessary for the extrapolation.

A.4 System and Liquid Check

A.4.1 System Check

The system performance check verifies that the system operates within its specifications. System and operator errors can be detected and corrected. It is recommended that the system performance check be performed prior to any usage of the system in order to guarantee reproducible results.

The system performance check uses normal SAR measurements in a simplified setup with a well characterized source. This setup was selected to give a high sensitivity to all parameters that might fail or vary over time. The system check does not intend to replace the calibration of the components, but indicates situations where the system uncertainty is exceeded due to drift or failure.

In the simplified setup for system check, the EUT is replaced by a calibrated dipole and the power source is replaced by a controlled continuous wave generated by a signal generator. The calibrated dipole must be placed beneath the flat phantom section of the phantom at the correct distance.

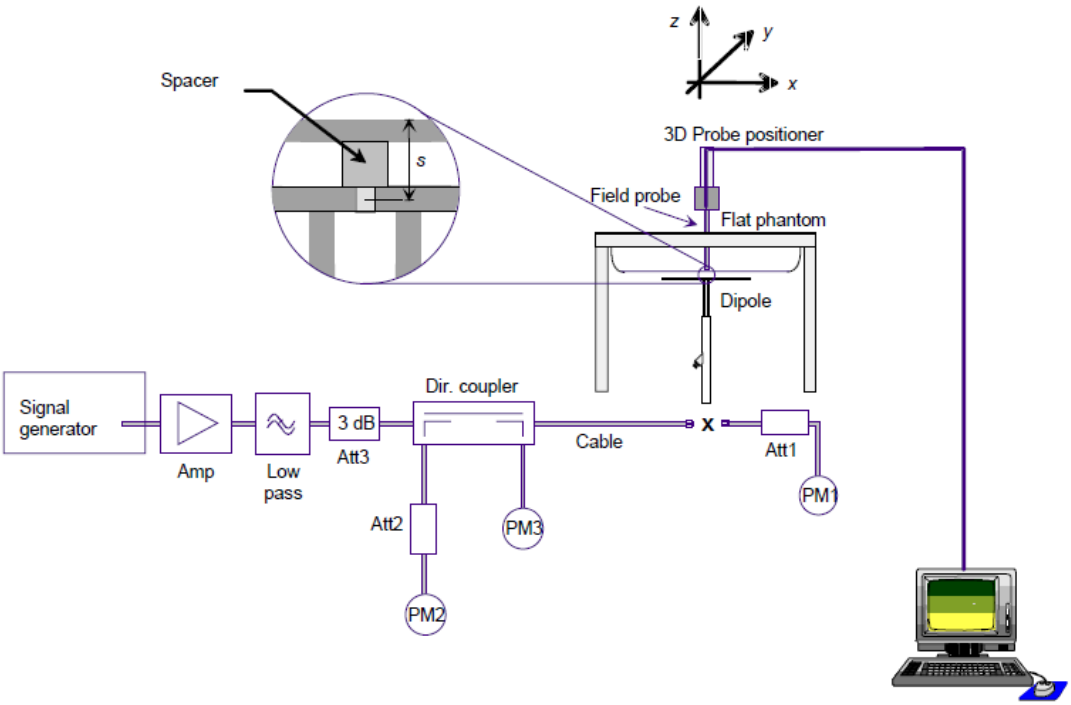

The equipment setup is shown below:

- ✓ Signal Generator
- ✓ Amplifier
- ✓ Directional coupler
- ✓ Power meter
- ✓ Calibrated dipole

First, the power meter PM1 (including attenuator Att1) is connected to the cable to measure the forward power at the location of the connector (x) to the system check source. The signal generator is adjusted for the desired forward power at the connector as read by power meter PM1 after attenuation Att1 and also as coupled through Att2 to PM2. After connecting the cable to the source, the signal generator is readjusted for the same reading at power meter PM2.

SAR results are normalized to a forward power of 1W to compare the values with the calibration reports results as described at IEEE 1528 and IEC 62209 standards.

A.4.2 Liquid Check

The dielectric parameters check is done prior to the use of the tissue simulating liquid. The verification is made by comparing the relative permittivity and conductivity to the values recommended by the applicable standards.

The liquid verification was performed using the following test setup:

- ✓ VNA (Vector Network Analyzer)
- ✓ Open-Short-Load calibration kit
- ✓ RF Cable
- ✓ Open-Ended Coaxial probe
- ✓ DAK software tool
- ✓ SAR Liquid
- ✓ De-ionized water
- ✓ Thermometer

These are the target dielectric properties of the tissue-equivalent liquid material as defined in FCC OET KDB 865664 D01.

Frequency	Body SAR	
(MHz)	ε_r (F/m)	σ (S/m)
150	61.9	0.80
300	58.2	0.92
450	56.7	0.94
835	55.2	0.97
900	55.0	1.05
1450	54.0	1.30
1800-2000	53.3	1.52
2450	52.7	1.95
3000	52.0	2.73
5800	48.2	6.00

(ε_r = relative permittivity, σ = conductivity and ρ = 1000 kg/m3)

The measurement system implement a SAR error compensation algorithm as documented in IEEE Std 1528-2013 (equivalent to draft standard IEEE P1528-2011) to automatically compensate the measured SAR results for deviations between the measured and required tissue dielectric parameters (applied to only scale up the measured SAR, and not downward) so, according to FCC OET KDB 865664 D01, the tolerance for ε_r and σ may be relaxed to ± 10%.

A.5 Test Equipment List

A.5.1 SAR System #2

ID #	Device	Type/Model	Serial Number	Manufacturer	Cal. Date	Cal. Due Date
0236	Dosimetric E-field Probe	EX3DV4	3978	SPEAG	2020-05-22	2021-05-22
0242	Data Acquisition Electronics	DAE4	1429	SPEAG	2020-05-14	2021-05-14
0451	6-axis Robot	TX60 L	F16/55FXA1/A/01	STAÜBLI	NA	NA
0453	Robot Controller	CS8C	F16/55FXA1/C/01	STAÜBLI	NA	NA
0455	Measurement Server	DASY6 P/N: SE UMS 028 BB	1489	SPEAG	NA	NA
0456	Electro-Optical Converter	EOC60	1098	SPEAG	NA	NA
0459	Light Beam Unit	SE UKS 030 AA	-	Di-soric	NA	NA
0460	Oval Flat Phantom	ELI v8.0	2048	SPEAG	NA	NA
0461	Measurement SW	DASY6 6.14.0.0989	9-5DEE27C2	SPEAG	NA	NA
0466	Laptop Holder	P/N SM LH1 001 CD	-	SPEAG	NA	NA

A.5.2 Shared Instrumentation

ID #	Device	Type/Model	Serial Number	Manufacturer	Cal. Date	Cal. Due Date
0098	USB Power Sensor	NRP-Z81	102278	R&S	2019-04-02	2021-04-02
0099	USB Power Sensor	NRP-Z81	102279	R&S	2019-04-02	2021-04-02
0100	Network Emulator	CMW500	129337	R&S	2019-04-02	2021-04-02
0114	Vector Signal Generator	ESG E4438C	MY45092885	Agilent	2019-05-28	2021-05-28
0170	Power Amplifier	SAM-01	151922	ETS-Lindgren	NA	NA
0224	Liquid measurement SW	DAK-3.5 V2.6.0.5	9-2687B491	SPEAG	NA	NA
0237	Dielectric Probe Kit	DAK-3.5	1037	SPEAG	2019-07-16	2021-07-16
0277	750 MHz System Validation Dipole	D750V3	1136	SPEAG	2019-01-17	2021-01-17
0278	835 MHz System Validation Dipole	D835V2	4d192	SPEAG	2019-01-17	2021-01-17
0280	1750 MHz System Validation Dipole	D1750V2	1133	SPEAG	2019-01-21	2021-01-21
0281	1900 MHz System Validation Dipole	D1900V2	5d197	SPEAG	2019-01-21	2021-01-21
0283	2300 MHz System Validation Dipole	D2300V2	1046	SPEAG	2019-01-21	2021-01-21
0284	2600 MHz System Validation Dipole	D2600V2	1100	SPEAG	2019-01-21	2021-01-21
0412	Coupler	CD0.5-8-20-30	1251-002	Amd-group	NA	NA
0414	RF Cable	ST-18/SMAm/SMAm/48	1158830	Huber & Suhner	2020-08-25	2021-02-25
0415	RF Cable	ST-18/SMAm/SMAm/48	1158831	Huber & Suhner	2020-08-25	2021-02-25
0655	Vector Reflectometer	PLANAR R140	0190616	Copper Mountain Technologies	2019-08-07	2021-08-07
0799	Temperature & Humidity Logger	RA32E-TH1-RAS	RA32-FBFD5A	AVTECH	2019-06-27	2021-06-27
0880	Thermometer	925	34822881	Testo	2019-11-19	2021-11-19

A.5.3 Tissue Simulant Liquid

TSL	Manufacturer / Model	Freq Range (MHz)	Main Ingredients
Body WideBand	SPEAG MBBL600-6000V6 Batch 160603-01	600-6000	Ethanediol, Sodium petroleum sulfonate, Hexylene Glycol / 2-Methyl-pentane-2.4-diol, Alkoxylated alcohol

A.6 Measurement Uncertainty Evaluation

The system uncertainty evaluation is shown in the table below with a coverage factor of k = 2 to indicate a 95% level of confidence:

SPEAG DASY6 Uncertainty Budget According to IEEE 1528-2013 and IEC 62209-1/2016 (0.3 - 6 GHz range)								
Error Description	Uncert. value	Prob. Dist.	Div.	(ci) 1g	(ci) 10g	Std. Unc. (1g)	Std. Unc. (10g)	(vi) veff
Measurement System								
Probe Calibration	±7.00	N	1	1	1	±7.00	±7.00	∞
Axial Isotropy	±4.7 %	R	√3	0.7	0.7	±1.9 %	±1.9 %	∞
Hemispherical Isotropy	±9.6 %	R	√3	0.7	0.7	±3.9 %	±3.9 %	∞
Boundary Effects	±2.0 %	R	√3	1	1	±1.2 %	±1.2 %	∞
Linearity	±4.7 %	R	√3	1	1	±2.7 %	±2.7 %	∞
System Detection Limits	±1.0 %	R	√3	1	1	±0.6 %	±0.6 %	∞
Modulation Response	±2.4 %	R	√3	1	1	±1.4 %	±1.4 %	∞
Readout Electronics	±0.3 %	N	1	1	1	±0.3 %	±0.3 %	∞
Response Time	±0.8 %	R	√3	1	1	±0.5 %	±0.5 %	∞
Integration Time	±2.6 %	R	√3	1	1	±1.5 %	±1.5 %	∞
RF Ambient Noise	±3.0 %	R	√3	1	1	±1.7 %	±1.7 %	∞
RF Ambient Reflections	±3.0 %	R	√3	1	1	±1.7 %	±1.7 %	∞
Probe Positioner	±0.04 %	R	√3	1	1	±0.0 %	±0.0 %	∞
Probe Positioning	±0.8 %	R	√3	1	1	±0.5 %	±0.5 %	∞
Max. SAR Eval.	±4.0 %	R	√3	1	1	±2.3 %	±2.3 %	∞
Test Sample Related								
Device Positioning	±2.9 %	N	1	1	1	±2.9 %	±2.9 %	145
Device Holder	±3.6 %	N	1	1	1	±3.6 %	±3.6 %	5
Power Drift	±5.0 %	R	√3	1	1	±2.9 %	±2.9 %	∞
Power Scaling	±0.0 %	R	√3	1	1	±0.0 %	±0.0 %	∞
Phantom and Setup								
Phantom Uncertainty	±6.6 %	R	√3	1	1	±3.8 %	±3.8 %	∞
SAR correction	±1.9 %	N	√3	1	0.84	±1.9 %	±1.6 %	∞
Liquid Conductivity (mea.)DAK	±2.5 %	N	√3	0.78	0.71	±2.0 %	±1.8 %	∞
Liquid Permittivity (mea.) DAK	±2.5 %	N	√3	0.23	0.26	±0.6 %	±0.7 %	∞
Temp. unc. - Conductivity BB	±3.4 %	R	√3	0.78	0.71	±1.5 %	±1.4 %	∞
Temp. unc. - Permittivity BB	±0.4 %	R	√3	0.23	0.26	±0.1 %	±0.1 %	∞
Combined Std. Uncertainty						±11.6 %	±11.5 %	569
Expanded STD Uncertainty						**±23.2%**	**±23.00 %**	

SPEAG DASY6 Uncertainty Budget According to IEC 62209-2/2010 (30 MHz - 6 GHz range)								
Error Description	Uncert. value	Prob. Dist.	Div.	(ci) 1g	(ci) 10g	Std. Unc. (1g)	Std. Unc. (10g)	(vi) veff
Measurement System								
Probe Calibration	±7.00 %	N	1	1	1	±7.00 %	±7.00 %	∞
Axial Isotropy	±4.7 %	R	√3	0.7	0.7	±1.9 %	±1.9 %	∞
Hemispherical Isotropy	±9.6 %	R	√3	0.7	0.7	±3.9 %	±3.9 %	∞
Linearity	±4.7 %	R	√3	1	1	±2.7 %	±2.7 %	∞
Modulation Response	±2.4 %	R	√3	1	1	±1.4 %	±1.4 %	∞
System Detection Limits	±1.0 %	R	√3	1	1	±0.6 %	±0.6 %	∞
Boundary Effects	±2.0 %	R	√3	1	1	±1.2 %	±1.2 %	∞
Readout Electronics	±0.3 %	N	1	1	1	±0.3 %	±0.3 %	∞
Response Time	±0.8 %	R	√3	1	1	±0.5 %	±0.5 %	∞
Integration Time	±2.6 %	R	√3	1	1	±1.5 %	±1.5 %	∞
RF Ambient Noise	±3.0 %	R	√3	1	1	±1.7 %	±1.7 %	∞
RF Ambient Reflections	±3.0 %	R	√3	1	1	±1.7 %	±1.7 %	∞
Probe Positioner	±0.04 %	R	√3	1	1	±0.0 %	±0.0 %	∞
Probe Positioning	±0.8 %	R	√3	1	1	±0.5 %	±0.5 %	∞
Post-processing	±4.0 %	R	√3	1	1	±2.3 %	±2.3 %	∞
Test Sample Related								
Device Holder	±3.6 %	N	1	1	1	±3.6 %	±3.6 %	5
Test sample Positioning	±2.9 %	N	1	1	1	±2.9 %	±2.9 %	145
Power Scaling	±0.0 %	R	√3	1	1	±0.0 %	±0.0 %	∞
Power Drift	±5.0 %	R	√3	1	1	±2.9 %	±2.9 %	∞
Phantom and Setup								
Phantom Uncertainty	±7.6 %	R	√3	1	1	±4.4 %	±4.4 %	∞
SAR correction	±1.9 %	N	√3	1	0.84	±1.9 %	±1.6 %	∞
Liquid Conductivity (mea.)DAK	±2.5 %	N	√3	0.78	0.71	±2.0 %	±1.8 %	∞
Liquid Permittivity (mea.) DAK	±2.5 %	N	√3	0.23	0.26	±0.6 %	±0.7 %	∞
Temp. unc. - Conductivity BB	±3.4 %	R	√3	0.78	0.71	±1.5 %	±1.4 %	∞
Temp. unc. - Permittivity BB	±0.4 %	R	√3	0.23	0.26	±0.1 %	±0.1 %	∞
Combined Std. Uncertainty						±11.6 %	±11.6 %	605
Expanded STD Uncertainty						**±23.3 %**	**±23.2 %**	

A.7 RF Exposure Limits

SAR assessments have been made in line with the requirements of FCC 47 CFR Part 2.1093 on the limitation of exposure of the general population / uncontrolled exposure for portable devices.

Exposure Type	General Population / Uncontrolled Environment
Peak spatial-average SAR (averaged over any 1 gram of tissue)	**1.6 W/kg**
Whole body average SAR	**0.08 W/kg**
Peak spatial-average SAR (extremities) (averaged over any 10 grams of tissue)	**4.0 W/kg**

Annex B. Test Results

The herein test results were performed by:

Test case measurement	Test Engineer
Conducted measurement	Zayd Ouachicha
SAR measurement	Edgar Garcia

B.1 Test Conditions

B.1.1 Test SAR Test positions relative to the phantom

Tablet mode

According to FCC OET KDB 616217 D04, the back surface and edges of the tablet should be tested for SAR compliance with the tablet touching the phantom. The SAR Test Exclusion Threshold in FCC OET KDB 447498 D01 can be applied to determine SAR test exclusion for adjacent edge configurations. (See section 6 for power specifications)

The reduced power values shown on section 6 and the closest distance from the antenna to an adjacent tablet edge is used to determine if SAR testing is required for the adjacent edges, with the adjacent edge positioned against the phantom and the edge containing the antenna positioned perpendicular to the phantom.

Considering the antenna location diagrams in Annex F and the test exclusions described before, the surfaces/edges to be measured for each antenna are:

Tablet	WWAN Main
Position	• Top Edge • Back Face • Right Edge

See *B.1.3.1* for a more detailed list of the applied reductions.

See *F.2 Test positions* section for more information on the tested positions.

B.1.2 Test signal, Output power and Test Frequencies

B.1.2.1 LTE TDD consideration

According to KDB 941225 D05 SAR for LTE Devices, for Time-Division Duplex (TDD) systems, SAR must be tested using a fixed periodic duty factor according to the highest transmission duty factor implemented for the device and supported by the defined 3GPP LTE TDD configurations.

LTE TDD Bands support 3GPP TS 36.211 section 4.2 for Type 2 Frame structure and table 2 for uplink-downlink configurations and table 1 for special subframe configurations

Table 1

Special subframe configuration	Normal cyclic prefix in downlink			Extended cyclic prefix in downlink		
	DwPTS	UpPTS		DwPTS	UpPTS	
		Normal cyclic prefix in uplink	Extended cyclic prefix in uplink		Normal cyclic prefix in uplink	Extended cyclic prefix in uplink
0	6592 T_S	(1+X) 2192 T_S	(1+X) 2560 T_S	7680 · T_S	(1+X) 2192 T_S	(1+X) 2560 T_S
1	19760 T_S			20480 T_S		
2	21952 T_S			23040 T_S		
3	24144 T_S			25600 T_S		
4	26336 T_S			7680 T_S	(2+X) 2192 T_S	(2+X) 2560 T_S
5	6592 T_S	(2+X) 2192 T_S	(2+X) 2560 T_S	20480 T_S		
6	19760 T_S			23040 T_S		
7	21952 T_S			12800 T_S		
8	24144 T_S			-	-	-
9	13168 T_S			-	-	-
10	13168 T_S	13150 T_S	12800 T_S	-	-	

Table2

Uplink-Downlink Config.	Downlink-to-Uplink Switch-point Periodicity	Subframe Number										Calculated Duty Cycle (%)
		0	1	2	3	4	5	6	7	8	9	
0	5 ms	D	S	U	U	U	D	S	U	U	U	63.3%
1	5 ms	D	S	U	U	D	D	S	U	U	D	43.3%
2	5 ms	D	S	U	D	D	D	S	U	D	D	23.3%
3	10 ms	D	S	U	U	U	D	D	D	D	D	31.7%
4	10 ms	D	S	U	U	D	D	D	D	D	D	21.7%
5	10 ms	D	S	U	D	D	D	D	D	D	D	11.7%
6	5 ms	D	S	U	U	U	D	S	U	U	D	53.3%

Calculated duty cycle = Extended cyclic prefix in uplink *(TS)*# of S + # of U / period
The configuration used for SAR testing was the number 0 which corresponds to the highest duty cycle (Power Class 3)

B.1.3 Evaluation Exclusion and Test Reductions

B.1.3.1 SAR evaluation exclusion

The SAR Test Exclusion Threshold in FCC OET KDB 447498 D01 v06 can be applied to determine SAR test exclusion for adjacent edge configurations. For 100MHz to 6GHz and test separation distances ≤50mm, the 1-g and 10-g SAR test exclusion thresholds are determined by the following formula:

$$[(\text{max. power of channel, including tune} - \text{up tolerance, mW})/(\text{min. test separation distance, mm})] \cdot \left[\sqrt{f_{(GHz)}}\right] \leq 3.0\ for\ 1g\ SAR, and \leq 7.5\ for\ 10g\ extremity\ SAR \quad (1)$$

Where:

- f(GHz) is the RF channel transmit frequency in GHz
- Power and distance are rounded to the nearest mW and mm before calculation
- The result is rounded to one decimal place for comparison
- The values 3.0 and 7.5 are referred to as numeric thresholds

The test exclusions are applicable only when the minimum test separation distance is ≤ 50 mm, and for transmission frequencies between 100 MHz and 6 GHz. When the minimum test separation distance is < 5 mm, a distance of 5 mm is applied to determine SAR test exclusion.

For test separation distances > 50 mm, the 1-g and 10-g SAR test exclusion thresholds are determined using the following formulas:

$$\langle(Power\ allowed\ at\ numeric\ threshold\ for\ 50\ mm\ in\ (1)) + (test\ separation\ distance - 50\ mm) \cdot (f_{MHz}/150)\rangle mW,\ for\ 100MHz\ to\ 1500MHz \quad (2)$$

$$\langle(Power\ allowed\ at\ numeric\ threshold\ for\ 50\ mm\ in\ (1)) + (test\ separation\ distance - 50\ mm) \cdot 10)\rangle mW,\ for\ 1500MHz\ and\ \leq 6GHz \quad (3)$$

Test Exclusion

Antenna	Band Name	Output power				Back Face	Top Edge	Right Edge	Left Edge	Bottom Edge	Laptop – Tent Mode	Back Face	Top Edge	Right Edge	Left Edge	Bottom Edge	Laptop – Tent Mode
		Notebook		Tablet													
		dBm	mW	dBm	mW												
WWAN Main	FDD II	23.5	223.9	13.5	22.4	**<50**	**<50**	**<50**	>50	>50	>50	T	T	T	R	R	R
	FDD IV	23.5	223.9	13	20.0	**<50**	**<50**	**<50**	>50	>50	>50	T	T	T	R	R	R
	FDD V	23.5	223.9	21	125.9	**<50**	**<50**	**<50**	>50	>50	>50	T	T	T	R	R	R
	LTE 2	23.0	200.0	13.5	22.4	**<50**	**<50**	**<50**	>50	>50	>50	T	T	T	R	R	R
	LTE 4	23.0	200.0	12.5	17.8	**<50**	**<50**	**<50**	>50	>50	>50	R	R	R	R	R	R
	LTE 5	23.0	200.0	21.5	141.3	**<50**	**<50**	**<50**	>50	>50	>50	R	R	R	R	R	R
	LTE 7	23.0	200.0	14	25.1	**<50**	**<50**	**<50**	>50	>50	>50	T	T	T	R	R	R
	LTE 12	23.0	200.0	20	100	**<50**	**<50**	**<50**	>50	>50	>50	T	T	T	R	R	R
	LTE 13	23.0	200.0	22	158.5	**<50**	**<50**	**<50**	>50	>50	>50	T	T	T	R	R	R
	LTE 17	23.0	200.0	20	100	**<50**	**<50**	**<50**	>50	>50	>50	R	R	R	R	R	R
	LTE 26	23.0	200.0	22	158.5	**<50**	**<50**	**<50**	>50	>50	>50	T	T	T	R	R	R
	LTE 30	23.0	200.0	13.5	22.4	**<50**	**<50**	**<50**	>50	>50	>50	T	T	T	R	R	R
	LTE 38	23.0	200.0	16.5	44.7	**<50**	**<50**	**<50**	>50	>50	>50	T	T	T	R	R	R
	LTE 41	23.0	200.0	14.5	28.2	**<50**	**<50**	**<50**	>50	>50	>50	T	T	T	R	R	R
	LTE 66	23.0	200.0	13.5	22.4	**<50**	**<50**	**<50**	>50	>50	>50	T	T	T	R	R	R

T: Tested position
R: Reduced
See Annex *F* for a more detailed explanation of the separation distance related to the platform.

In order to evaluate SAR test exclusion for laptop (tent mode) and tablet user positions in which the separation distance passes the 50mm limit, equations (2) and (3) are used with the corresponding frequencies for each band, the user distances for the two positions and with the power values described on Section 6. The table below shows all cellular bands evaluated in this report grouped by frequency band, separation distances and the corresponding Power threshold in mW for each combination (distance and frequency)

Bands	Freq	Separation distance to the body on mm										
		60	70	80	90	100	110	160	170	190	200	
LTE 12,13, 17	750	223	273	323	373	423	473	723	773	873	923	Threshold values in mW
FDD V LTE 5, 26	835	220	275	331	387	442	498	776	832	943	999	
FDD IV LTE 4, 66	1750	213	313	413	513	613	713	1213	1313	1513	1613	
FDD II LTE 2	1900	209	309	409	509	609	709	1209	1309	1509	1609	
LTE 30	2300	199	299	399	499	599	699	1199	1299	1499	1599	
LTE 7, 41	2600	193	293	393	493	593	693	1193	1293	1493	1593	

Since the highest output power for all bands in laptop mode (tent mode) is 223.9mW and the distance to the phantom is >200mm, Laptop (tent mode) position is not required

The highest output power for all bands in tablet mode is 158mW which is smaller than all the values of the table, SAR is not required for the tablet bottom and left edge positions

B.1.3.2 General SAR test reduction

According to FCC OET KDB 447498 D01, testing of other required channels within the operating mode of a frequency band is not required when the reported 1-g or 10-g SAR for the mid-band or highest output power channel is:

- ≤ 0.8 W/kg or 2.0 W/kg, for 1-g or 10-g respectively, when the transmission band is ≤ 100 MHz
- ≤ 0.6 W/kg or 1.5 W/kg, for 1-g or 10-g respectively, when the transmission band is between 100 MHz and 200 MHz
- ≤ 0.4 W/kg or 1.0 W/kg, for 1-g or 10-g respectively, when the transmission band is ≥ 200 MHz

WLAN SAR Test reduction

Transmission Mode	SAR test exclusion/reduction
DSSS	According to FCC OET KDB 248227 D01, SAR is measured for 2.4 GHz 802.11b, SAR test reduction is determined according to the following: ▪ When the reported SAR of the highest measured maximum output power channel for the exposure configuration is ≤ 0.8 W/kg, no further SAR testing is required for 802.11b DSSS in that exposure configuration. ▪ When the reported SAR is > 0.8 W/kg, SAR is required for that exposure configuration using the next highest measured output power channel. When any reported SAR is > 1.2 W/kg, SAR is required for the third channel. According to FCC OET KDB 248227 D01, SAR is not required for 2.4 GHz OFDM conditions when the highest reported SAR for DSSS is adjusted by the ratio of OFDM to DSSS specified maximum output power and the adjusted SAR is ≤ 1.2 W/kg.
OFDM	According to FCC OET KDB 248227 D01, 802.11a/g/n/ac modes have the same specified maximum output power, largest channel bandwidth, lowest order modulation and lowest data rate, the lowest order 802.11 mode is selected; i.e., 802.11a is chosen over 802.11n then 802.11ac or 802.11g is chosen over 802.11n. According to FCC OET KDB 248227 D01, an *initial test configuration* is determined for OFDM and DSSS transmission modes according to the channel bandwidth, modulation and data rate combination(s) with the highest maximum output power specified for production units in each standalone and aggregated frequency band. SAR is measured using the highest measured maximum output power channel. SAR test reduction for subsequent highest output test channels is determined according to reported SAR of the initial test configuration. The *initial test configuration* for 5 GHz OFDM transmission modes is determined by the 802.11 configuration with the highest maximum output power specified for production units, including tune-up tolerance, in each standalone and aggregated frequency band. SAR for the initial test configuration is measured using the highest maximum output power channel determined by the default power measurement procedures. According to FCC OET KDB 248227 D01, when the reported SAR of the initial test configuration is > 0.8 W/kg, SAR measurement is required for subsequent next highest measured output power channel(s) in the initial test configuration until reported SAR is ≤ 1.2 W/kg or all required channels are tested.

WWAN SAR Test reduction

Transmission Mode	SAR test exclusion/reduction
HSDPA	According to FCC OET KDB 941225 D01, SAR evaluation is not required when the maximum average output power is < ¼ dB higher than the measured on the corresponding channels without HSDPA, using 12.2kbps RMC, and the maximum SAR for 12.2kbps RMC is < 1.2 W/kg.
HSUPA	According to FCC OET KDB 941225 D01, SAR evaluation is not required when the maximum average output power is < ¼ dB higher than the measured on the corresponding channels without HSUPA, using 12.2kbps RMC, and the maximum SAR for 12.2kbps RMC is < 1.2 W/kg.
DC+HSDPA	According to FCC OET KDB 941225 D01, SAR evaluation is not required when the maximum average output power is < ¼ dB higher than the measured on the corresponding channels without DC+HSDPA, using 12.2kbps RMC, and the maximum SAR for 12.2kbps RMC is < 1.2 W/kg.
LTE	According to FCC OET KDB 941225 D05, testing of 100% RB allocation, higher order modulations or lower BW is not required when these conditions are met: ○ For QPSK with 100% RB allocation, SAR is not required when the highest maximum output power for 100 % RB allocation is less than the highest maximum output power in 50% and 1 RB allocations and the highest reported SAR for 1 RB and 50% RB allocation are ≤ 0.8 W/kg. ○ For each modulation besides QPSK, SAR is required only when the highest maximum output power for the configuration in the higher order modulation is > ½ dB higher than the same configuration in QPSK or when the reported SAR for the QPSK configuration is > 1.45 W/kg. ○ For lower BW, only measure SAR when the highest maximum output power of a configuration requiring testing in the smaller channel bandwidth is > ½ dB higher than the equivalent channel configurations in the largest channel bandwidth configuration or the reported SAR of a configuration for the largest channel bandwidth is > 1.45 W/kg. For LTE bands that do not support at least three non-overlapping channels in certain channel bandwidths, test the available non-overlapping channels instead. When a device supports overlapping channel assignment in a channel bandwidth configuration, the middle channel of the group of overlapping channels should be selected for testing; therefore, the requirement for H, M, and L channels may not fully apply

B.2 Conducted Power Measurements

B.2.1 WCDMA/ HSPA/ DC-HSPA

B.2.1.1 WCDMA Band II

Mode	Channel Number	Freq (MHz)	Subset	Average Power Measured (dBm)	Factory Upper Tolerance (dBm)
RMC	9262	1852.4	-	13.36	13.50
	9400	1880	-	13.22	13.50
	9538	1907.6	-	13.28	13.50
HSDPA	9262	1852.4	1	13.32	13.50
			2	13.35	13.50
			3	13.36	13.50
			4	13.34	13.50
	9400	1880	1	13.21	13.50
			2	13.19	13.50
			3	13.19	13.50
			4	13.21	13.50
	9538	1907.6	1	13.25	13.50
			2	13.27	13.50
			3	13.27	13.50
			4	13.26	13.50
HSUPA	9262	1852.4	1	13.32	13.50
			2	13.35	13.50
			3	13.36	13.50
			4	13.36	13.50
			5	13.18	13.50
	9400	1880	1	13.21	13.50
			2	13.20	13.50
			3	13.22	13.50
			4	13.28	13.50
			5	13.25	13.50
	9538	1907.6	1	13.26	13.50
			2	13.27	13.50
			3	13.34	13.50
			4	13.30	13.50
			5	13.33	13.50
DC-HSDPA	9262	1852.4	1	13.36	13.50
			2	13.36	13.50
			3	13.19	13.50
			4	13.21	13.50
	9400	1880	1	13.22	13.50
			2	13.16	13.50
			3	13.22	13.50
			4	13.27	13.50
	9538	1907.6	1	13.27	13.50
			2	13.26	13.50
			3	13.27	13.50
			4	13.27	13.50

B.2.1.2 WCDMA Band IV

Mode	Channel Number	Freq (MHz)	Subset	Average Power Measured (dBm)	Factory Upper Tolerance (dBm)
RMC	1312	1712.4	-	12.08	13.00
	1413	1732.6	-	12.33	13.00
	1513	1752.6	-	12.57	13.00
HSDPA	1312	1712.4	1	12.06	13.00
			2	12.06	13.00
			3	12.04	13.00
			4	12.05	13.00
	1413	1732.6	1	12.28	13.00
			2	12.27	13.00
			3	12.29	13.00
			4	12.32	13.00
	1513	1752.6	1	12.54	13.00
			2	12.56	13.00
			3	12.56	13.00
			4	12.57	13.00
HSUPA	1312	1712.4	1	12.06	13.00
			2	12.06	13.00
			3	12.07	13.00
			4	12.08	13.00
			5	12.28	13.00
	1413	1732.6	1	12.27	13.00
			2	12.27	13.00
			3	12.30	13.00
			4	12.55	13.00
			5	12.55	13.00
	1513	1752.6	1	12.54	13.00
			2	12.56	13.00
			3	12.10	13.00
			4	12.07	13.00
			5	12.15	13.00
DC-HSDPA	1312	1712.4	1	12.13	13.00
			2	12.11	13.00
			3	12.30	13.00
			4	12.31	13.00
	1413	1732.6	1	12.31	13.00
			2	12.31	13.00
			3	12.33	13.00
			4	12.51	13.00
	1513	1752.6	1	12.56	13.00
			2	12.57	13.00
			3	12.57	13.00
			4	12.56	13.00

B.2.1.3 WCDMA Band V

Mode	Channel Number	Freq (MHz)	Subset	Pwr Avg (dBm)	Factory Upper Tolerance (dBm)
RMC	4132	826.4	-	20.68	21.00
	4183	836.6	-	20.65	21.00
	4233	846.6	-	20.63	21.00
HSDPA	4132	826.4	1	20.68	21.00
			2	20.66	21.00
			3	20.68	21.00
			4	20.67	21.00
	4183	836.6	1	20.64	21.00
			2	20.64	21.00
			3	20.64	21.00
			4	20.61	21.00
	4233	846.6	1	20.61	21.00
			2	20.62	21.00
			3	20.61	21.00
			4	20.60	21.00
HSUPA	4132	826.4	1	20.69	21.00
			2	20.69	21.00
			3	20.69	21.00
			4	20.70	21.00
			5	20.64	21.00
	4183	836.6	1	20.63	21.00
			2	20.63	21.00
			3	20.64	21.00
			4	20.62	21.00
			5	20.59	21.00
	4233	846.6	1	20.60	21.00
			2	20.61	21.00
			3	20.66	21.00
			4	20.66	21.00
			5	20.64	21.00
DC- HSDPA	4132	826.4	1	20.64	21.00
			2	20.66	21.00
			3	20.63	21.00
			4	20.65	21.00
	4183	836.6	1	20.65	21.00
			2	20.65	21.00
			3	20.61	21.00
			4	20.61	21.00
	4233	846.6	1	20.59	21.00
			2	20.57	21.00
			3	20.62	21.00
			4	20.61	21.00

B.2.2 LTE

B.2.2.1 LTE Band 2 FDD

Band	BW	Channel#	Freq (MHz)	% RB Allocation	RB Position	Factory Upper Tolerance (dBm)	Measured Output Power (dBm)	
							QPSK	16-QAM
LTE2	20 MHz	18700	1860	1RB Low	1 Pos 0	13.50	13.23	13.33
				1RB Mid	1 Pos 50	13.50	13.09	13.24
				1RB High	1 Pos 99	13.50	13.13	13.24
				50% RB Low	50 Pos 0	13.50	13.04	13.12
				50% RB Mid	50 Pos 24	13.50	13.05	13.10
				50% RB High	50 Pos 50	13.50	13.06	13.11
				100% RB	100 Pos 0	13.50	13.14	13.16
		18900	1880	1RB Low	1 Pos 0	13.50	13.20	13.27
				1RB Mid	1 Pos 50	13.50	13.22	13.30
				1RB High	1 Pos 99	13.50	13.29	13.47
				50% RB Low	50 Pos 0	13.50	13.04	13.09
				50% RB Mid	50 Pos 24	13.50	13.08	13.12
				50% RB High	50 Pos 50	13.50	13.17	13.21
				100% RB	100 Pos 0	13.50	13.20	13.24
		19100	1900	1RB Low	1 Pos 0	13.50	13.20	13.40
				1RB Mid	1 Pos 50	13.50	13.06	13.25
				1RB High	1 Pos 99	13.50	13.14	13.36
				50% RB Low	50 Pos 0	13.50	13.06	13.13
				50% RB Mid	50 Pos 24	13.50	13.06	13.13
				50% RB High	50 Pos 50	13.50	13.13	13.21
				100% RB	100 Pos 0	13.50	13.27	13.39
	15 MHz	18675	1857.5	1RB Low	1 Pos 0	13.50	13.35	13.49
				1RB Mid	1 Pos 38	13.50	13.25	13.39
				1RB High	1 Pos 74	13.50	13.20	13.34
				50% RB Low	38 Pos 0	13.50	13.09	13.18
				50% RB Mid	38 Pos 19	13.50	13.03	13.11
				50% RB High	38 Pos 39	13.50	13.03	13.10
				100% RB	75 Pos 0	13.50	13.20	13.14
		18900	1880	1RB Low	1 Pos 0	13.50	12.98	13.04
				1RB Mid	1 Pos 38	13.50	13.12	13.21
				1RB High	1 Pos 74	13.50	13.28	13.31
				50% RB Low	38 Pos 0	13.50	13.05	13.11
				50% RB Mid	38 Pos 19	13.50	13.12	13.18
				50% RB High	38 Pos 39	13.50	13.20	13.25
				100% RB	75 Pos 0	13.50	13.08	13.17
		19125	1902.5	1RB Low	1 Pos 0	13.50	13.06	13.26
				1RB Mid	1 Pos 38	13.50	13.10	13.34
				1RB High	1 Pos 74	13.50	13.10	13.31
				50% RB Low	38 Pos 0	13.50	13.05	13.11
				50% RB Mid	38 Pos 19	13.50	13.19	13.24
				50% RB High	38 Pos 39	13.50	13.24	13.32
				100% RB	75 Pos 0	13.50	13.30	13.35
	10 MHz	18650	1855	1RB Low	1 Pos 0	13.50	13.35	13.39
				1RB Mid	1 Pos 24	13.50	13.25	13.26
				1RB High	1 Pos 49	13.50	13.15	13.19
				50% RB Low	25 Pos 0	13.50	13.23	13.33
				50% RB Mid	25 Pos 12	13.50	13.14	13.25
				50% RB High	25 Pos 24	13.50	13.13	13.22
				100% RB	50 Pos 0	13.50	13.10	13.13
		18900	1880	1RB Low	1 Pos 0	13.50	13.09	13.07
				1RB Mid	1 Pos 24	13.50	13.16	13.15
				1RB High	1 Pos 49	13.50	13.27	13.27
				50% RB Low	25 Pos 0	13.50	13.10	13.17
				50% RB Mid	25 Pos 12	13.50	13.08	13.17
				50% RB High	25 Pos 24	13.50	13.15	13.23
				100% RB	50 Pos 0	13.50	13.04	13.14
		19150	1905	1RB Low	1 Pos 0	13.50	12.99	13.18
				1RB Mid	1 Pos 24	13.50	13.06	13.24
				1RB High	1 Pos 49	13.50	13.12	13.29
				50% RB Low	25 Pos 0	13.50	13.12	13.20
				50% RB Mid	25 Pos 12	13.50	13.14	13.21
				50% RB High	25 Pos 24	13.50	13.14	13.21
				100% RB	50 Pos 0	13.50	13.22	13.22

Band	BW	Channel#	Freq (MHz)	% RB Allocation	RB Position	Factory Upper Tolerance (dBm)	Measured Output Power (dBm)	
							QPSK	16-QAM
LTE2	5.0 MHz	18625	1852.5	1RB Low	1 Pos 0	13.50	13.22	13.36
				1RB Mid	1 Pos 12	13.50	13.22	13.38
				1RB High	1 Pos 24	13.50	13.15	13.50
				50% RB Low	12 Pos 0	13.50	13.16	13.22
				50% RB Mid	12 Pos 6	13.50	13.17	13.20
				50% RB High	12 Pos 11	13.50	13.16	13.24
				100% RB	25 Pos 0	13.50	13.10	13.18
		18900	1880	1RB Low	1 Pos 0	13.50	13.09	13.18
				1RB Mid	1 Pos 12	13.50	12.98	13.16
				1RB High	1 Pos 24	13.50	13.11	13.23
				50% RB Low	12 Pos 0	13.50	13.02	13.05
				50% RB Mid	12 Pos 6	13.50	13.03	13.07
				50% RB High	12 Pos 11	13.50	13.02	13.05
				100% RB	25 Pos 0	13.50	13.04	13.07
		19175	1907.5	1RB Low	1 Pos 0	13.50	13.18	13.41
				1RB Mid	1 Pos 12	13.50	13.16	13.41
				1RB High	1 Pos 24	13.50	13.19	13.43
				50% RB Low	12 Pos 0	13.50	13.20	13.24
				50% RB Mid	12 Pos 6	13.50	13.11	13.14
				50% RB High	12 Pos 11	13.50	13.11	13.20
				100% RB	25 Pos 0	13.50	13.09	13.20
	3.0 MHz	18615	1851.5	1RB Low	1 Pos 0	13.50	13.06	13.26
				1RB Mid	1 Pos 7	13.50	13.08	13.46
				1RB High	1 Pos 14	13.50	13.07	13.26
				50% RB Low	8 Pos 0	13.50	13.14	13.27
				50% RB Mid	8 Pos 4	13.50	13.15	13.26
				50% RB High	8 Pos 7	13.50	13.18	13.29
				100% RB	15 Pos 0	13.50	13.19	13.22
		18900	1880	1RB Low	1 Pos 0	13.50	12.94	12.96
				1RB Mid	1 Pos 7	13.50	13.02	13.39
				1RB High	1 Pos 14	13.50	12.94	12.95
				50% RB Low	8 Pos 0	13.50	13.01	13.12
				50% RB Mid	8 Pos 4	13.50	12.98	13.13
				50% RB High	8 Pos 7	13.50	13.00	13.14
				100% RB	15 Pos 0	13.50	13.02	13.12
		19185	1908.5	1RB Low	1 Pos 0	13.50	13.06	13.12
				1RB Mid	1 Pos 7	13.50	13.13	13.46
				1RB High	1 Pos 14	13.50	13.03	13.35
				50% RB Low	8 Pos 0	13.50	13.10	13.14
				50% RB Mid	8 Pos 4	13.50	13.07	13.13
				50% RB High	8 Pos 7	13.50	13.06	13.15
				100% RB	15 Pos 0	13.50	13.12	13.14
	1.4 MHz	18607	1850.7	1RB Low	1 Pos 0	13.50	13.26	13.16
				1RB Mid	1 Pos 2	13.50	13.15	13.11
				1RB High	1 Pos 5	13.50	13.15	13.13
				50% RB Low	3 Pos 0	13.50	13.14	13.14
				50% RB Mid	3 Pos 1	13.50	13.11	13.07
				50% RB High	3 Pos 2	13.50	13.12	13.09
				100% RB	6 Pos 0	13.50	13.14	13.16
		18900	1880	1RB Low	1 Pos 0	13.50	13.01	13.19
				1RB Mid	1 Pos 2	13.50	13.03	13.16
				1RB High	1 Pos 5	13.50	13.09	13.21
				50% RB Low	3 Pos 0	13.50	12.97	12.99
				50% RB Mid	3 Pos 1	13.50	12.97	12.98
				50% RB High	3 Pos 2	13.50	12.96	13.27
				100% RB	6 Pos 0	13.50	12.99	12.99
		19193	1909.3	1RB Low	1 Pos 0	13.50	13.04	13.20
				1RB Mid	1 Pos 2	13.50	13.03	13.17
				1RB High	1 Pos 5	13.50	13.07	13.48
				50% RB Low	3 Pos 0	13.50	13.11	13.09
				50% RB Mid	3 Pos 1	13.50	13.08	13.24
				50% RB High	3 Pos 2	13.50	13.04	13.08
				100% RB	6 Pos 0	13.50	13.10	13.11

B.2.2.2 LTE Band 4 FDD

SAR Measurement for LTE Band 4 FDD (Frequency range: 1710 – 1755MHz) is covered by LTE Band 66 FDD (Frequency range: 1710 – 1780MHz) due to overlapping frequency range, lower tune-up power and same bandwidth.

B.2.2.3 LTE band 5 FDD

SAR Measurement for LTE Band 5 FDD (Frequency range: 824 – 849MHz) is covered by LTE Band 26 FDD (Frequency range: 814 – 849MHz) due to overlapping frequency range, lower maximum tune-up and similar bandwidth

B.2.2.4 LTE Band 7 FDD

Band	BW	Channel#	Freq (MHz)	% RB Allocation	RB Position	Factory Upper Tolerance (dBm)	Measured Output Power (dBm)	
							QPSK	16-QAM
LTE7	20 MHz	20850	2510	1RB Low	1 Pos 0	14.00	13.38	13.65
				1RB Mid	1 Pos 50	14.00	13.40	13.68
				1RB High	1 Pos 99	14.00	13.50	13.79
				50% RB Low	50 Pos 0	14.00	13.46	13.48
				50% RB Mid	50 Pos 24	14.00	13.37	13.42
				50% RB High	50 Pos 50	14.00	13.42	13.48
				100% RB	100 Pos 0	14.00	13.55	13.55
		21100	2535	1RB Low	1 Pos 0	14.00	13.39	13.50
				1RB Mid	1 Pos 50	14.00	13.37	13.48
				1RB High	1 Pos 99	14.00	13.53	13.59
				50% RB Low	50 Pos 0	14.00	13.34	13.37
				50% RB Mid	50 Pos 24	14.00	13.29	13.34
				50% RB High	50 Pos 50	14.00	13.47	13.48
				100% RB	100 Pos 0	14.00	13.52	13.54
		21350	2560	1RB Low	1 Pos 0	14.00	13.41	13.61
				1RB Mid	1 Pos 50	14.00	13.29	13.56
				1RB High	1 Pos 99	14.00	13.38	13.55
				50% RB Low	50 Pos 0	14.00	13.29	13.30
				50% RB Mid	50 Pos 24	14.00	13.27	13.26
				50% RB High	50 Pos 50	14.00	13.36	13.37
				100% RB	100 Pos 0	14.00	13.35	13.36
	15 MHz	20825	2507.5	1RB Low	1 Pos 0	14.00	13.36	13.64
				1RB Mid	1 Pos 38	14.00	13.38	13.64
				1RB High	1 Pos 74	14.00	13.38	13.64
				50% RB Low	38 Pos 0	14.00	13.50	13.50
				50% RB Mid	38 Pos 19	14.00	13.47	13.48
				50% RB High	38 Pos 39	14.00	13.48	13.47
				100% RB	75 Pos 0	14.00	13.47	13.46
		21100	2535	1RB Low	1 Pos 0	14.00	13.35	13.40
				1RB Mid	1 Pos 38	14.00	13.40	13.42
				1RB High	1 Pos 74	14.00	13.49	13.53
				50% RB Low	38 Pos 0	14.00	13.32	13.34
				50% RB Mid	38 Pos 19	14.00	13.36	13.34
				50% RB High	38 Pos 39	14.00	13.47	13.44
				100% RB	75 Pos 0	14.00	13.44	13.50
		21375	2562.5	1RB Low	1 Pos 0	14.00	13.23	13.39
				1RB Mid	1 Pos 38	14.00	13.18	13.34
				1RB High	1 Pos 74	14.00	13.16	13.33
				50% RB Low	38 Pos 0	14.00	13.29	13.32
				50% RB Mid	38 Pos 19	14.00	13.29	13.33
				50% RB High	38 Pos 39	14.00	13.28	13.33
				100% RB	75 Pos 0	14.00	13.29	13.33
	10 MHz	20800	2505	1RB Low	1 Pos 0	14.00	13.41	13.51
				1RB Mid	1 Pos 24	14.00	13.45	13.51
				1RB High	1 Pos 49	14.00	13.60	13.64
				50% RB Low	25 Pos 0	14.00	13.46	13.52
				50% RB Mid	25 Pos 12	14.00	13.45	13.51
				50% RB High	25 Pos 24	14.00	13.48	13.55
				100% RB	50 Pos 0	14.00	13.50	13.49
		21100	2535	1RB Low	1 Pos 0	14.00	13.34	13.20
				1RB Mid	1 Pos 24	14.00	13.27	13.10
				1RB High	1 Pos 49	14.00	13.41	13.20
				50% RB Low	25 Pos 0	14.00	13.45	13.42
				50% RB Mid	25 Pos 12	14.00	13.42	13.40
				50% RB High	25 Pos 24	14.00	13.46	13.45
				100% RB	50 Pos 0	14.00	13.44	13.47
		21400	2565	1RB Low	1 Pos 0	14.00	13.28	13.42
				1RB Mid	1 Pos 24	14.00	13.25	13.37
				1RB High	1 Pos 49	14.00	13.16	13.30
				50% RB Low	25 Pos 0	14.00	13.35	13.41
				50% RB Mid	25 Pos 12	14.00	13.39	13.44
				50% RB High	25 Pos 24	14.00	13.35	13.39
				100% RB	50 Pos 0	14.00	13.37	13.40

Band	BW	Channel#	Freq (MHz)	% RB Allocation	RB Position	Factory Upper Tolerance (dBm)	Measured Output Power (dBm)	
							QPSK	16-QAM
LTE7	5.0 MHz	20775	2502.5	1RB Low	1 Pos 0	14.00	13.30	13.44
				1RB Mid	1 Pos 12	14.00	13.35	13.52
				1RB High	1 Pos 24	14.00	13.36	13.48
				50% RB Low	12 Pos 0	14.00	13.42	13.38
				50% RB Mid	12 Pos 6	14.00	13.45	13.57
				50% RB High	12 Pos 11	14.00	13.43	13.39
				100% RB	25 Pos 0	14.00	13.46	13.43
		21100	2535	1RB Low	1 Pos 0	14.00	13.27	13.42
				1RB Mid	1 Pos 12	14.00	13.22	13.39
				1RB High	1 Pos 24	14.00	13.25	13.40
				50% RB Low	12 Pos 0	14.00	13.31	13.40
				50% RB Mid	12 Pos 6	14.00	13.40	13.41
				50% RB High	12 Pos 11	14.00	13.30	13.36
				100% RB	25 Pos 0	14.00	13.33	13.40
		21425	2567.5	1RB Low	1 Pos 0	14.00	13.34	13.49
				1RB Mid	1 Pos 12	14.00	13.24	13.39
				1RB High	1 Pos 24	14.00	13.27	13.41
				50% RB Low	12 Pos 0	14.00	13.29	13.35
				50% RB Mid	12 Pos 6	14.00	13.23	13.26
				50% RB High	12 Pos 11	14.00	13.26	13.31
				100% RB	25 Pos 0	14.00	13.30	13.36

B.2.2.5 LTE Band 12 FDD

Band	BW	Channel#	Freq (MHz)	% RB Allocation	RB Position	Factory Upper Tolerance (dBm)	Measured Output Power (dBm)	
							QPSK	16-QAM
LTE12	10 MHz	23095	707.5	1RB Low	1 Pos 0	20.00	19.65	19.93
				1RB Mid	1 Pos 24	20.00	19.69	19.96
				1RB High	1 Pos 49	20.00	19.74	19.97
				50% RB Low	25 Pos 0	20.00	19.81	19.90
				50% RB Mid	25 Pos 12	20.00	19.82	19.89
				50% RB High	25 Pos 24	20.00	19.82	19.96
				100% RB	50 Pos 0	20.00	19.93	19.96
	5.0 MHz	23035	701.5	1RB Low	1 Pos 0	20.00	19.95	19.89
				1RB Mid	1 Pos 12	20.00	19.82	19.91
				1RB High	1 Pos 24	20.00	19.84	19.85
				50% RB Low	12 Pos 0	20.00	19.63	19.78
				50% RB Mid	12 Pos 6	20.00	19.79	19.74
				50% RB High	12 Pos 11	20.00	19.59	19.70
				100% RB	25 Pos 0	20.00	19.73	19.79
		23095	707.5	1RB Low	1 Pos 0	20.00	19.80	19.96
				1RB Mid	1 Pos 12	20.00	19.82	19.89
				1RB High	1 Pos 24	20.00	19.92	19.92
				50% RB Low	12 Pos 0	20.00	19.69	19.81
				50% RB Mid	12 Pos 6	20.00	19.76	19.82
				50% RB High	12 Pos 11	20.00	19.72	19.81
				100% RB	25 Pos 0	20.00	19.72	19.76
		23155	713.5	1RB Low	1 Pos 0	20.00	19.82	20.00
				1RB Mid	1 Pos 12	20.00	19.75	19.90
				1RB High	1 Pos 24	20.00	19.74	19.93
				50% RB Low	12 Pos 0	20.00	19.58	19.68
				50% RB Mid	12 Pos 6	20.00	19.55	19.67
				50% RB High	12 Pos 11	20.00	19.52	19.55
				100% RB	25 Pos 0	20.00	19.63	19.58
	3.0 MHz	23025	700.5	1RB Low	1 Pos 0	20.00	19.79	19.72
				1RB Mid	1 Pos 7	20.00	19.75	19.69
				1RB High	1 Pos 14	20.00	19.69	19.95
				50% RB Low	8 Pos 0	20.00	19.58	19.87
				50% RB Mid	8 Pos 4	20.00	19.74	19.82
				50% RB High	8 Pos 7	20.00	19.54	19.76
				100% RB	15 Pos 0	20.00	19.72	19.78
		23095	707.5	1RB Low	1 Pos 0	20.00	19.68	19.94
				1RB Mid	1 Pos 7	20.00	19.98	19.89
				1RB High	1 Pos 14	20.00	19.92	19.91
				50% RB Low	8 Pos 0	20.00	19.71	19.64
				50% RB Mid	8 Pos 4	20.00	19.74	19.81
				50% RB High	8 Pos 7	20.00	19.72	19.78
				100% RB	15 Pos 0	20.00	19.74	19.79
		23165	714.5	1RB Low	1 Pos 0	20.00	19.76	19.96
				1RB Mid	1 Pos 7	20.00	19.63	19.88
				1RB High	1 Pos 14	20.00	19.60	19.84
				50% RB Low	8 Pos 0	20.00	19.59	19.52
				50% RB Mid	8 Pos 4	20.00	19.57	19.52
				50% RB High	8 Pos 7	20.00	19.68	19.56
				100% RB	15 Pos 0	20.00	19.60	19.57

Band	BW	Channel#	Freq (MHz)	% RB Allocation	RB Position	Factory Upper Tolerance (dBm)	Measured Output Power (dBm)	
							QPSK	16-QAM
LTE12	1.4 MHz	23017	699.7	1RB Low	1 Pos 0	20.00	19.84	19.82
				1RB Mid	1 Pos 2	20.00	19.77	19.76
				1RB High	1 Pos 5	20.00	19.95	19.83
				50% RB Low	3 Pos 0	20.00	19.74	19.99
				50% RB Mid	3 Pos 1	20.00	19.75	19.99
				50% RB High	3 Pos 2	20.00	19.77	19.99
				100% RB	6 Pos 0	20.00	19.92	19.84
		23095	707.5	1RB Low	1 Pos 0	20.00	19.89	19.94
				1RB Mid	1 Pos 2	20.00	19.87	19.90
				1RB High	1 Pos 5	20.00	19.88	19.96
				50% RB Low	3 Pos 0	20.00	19.72	19.70
				50% RB Mid	3 Pos 1	20.00	19.71	19.72
				50% RB High	3 Pos 2	20.00	19.73	19.74
				100% RB	6 Pos 0	20.00	19.71	19.76
		23173	715.3	1RB Low	1 Pos 0	20.00	19.71	19.99
				1RB Mid	1 Pos 2	20.00	19.66	19.99
				1RB High	1 Pos 5	20.00	19.71	19.96
				50% RB Low	3 Pos 0	20.00	19.56	19.69
				50% RB Mid	3 Pos 1	20.00	19.54	19.62
				50% RB High	3 Pos 2	20.00	19.62	19.63
				100% RB	6 Pos 0	20.00	19.61	19.77

B.2.2.6 LTE Band 13 FDD

Band	BW	Channel#	Freq (MHz)	% RB Allocation	RB Position	Factory Upper Tolerance (dBm)	Measured Output Power (dBm)	
							QPSK	16-QAM
LTE13	10 MHz	23230	782	1RB Low	1 Pos 0	22.00	21.42	21.76
				1RB Mid	1 Pos 24	22.00	21.55	21.93
				1RB High	1 Pos 49	22.00	21.54	21.96
				50% RB Low	25 Pos 0	22.00	21.49	20.97
				50% RB Mid	25 Pos 12	22.00	21.57	21.13
				50% RB High	25 Pos 24	22.00	21.49	21.05
				100% RB	50 Pos 0	22.00	21.71	21.13
	5.0 MHz	23230	782	1RB Low	1 Pos 0	22.00	21.55	21.64
				1RB Mid	1 Pos 12	22.00	21.56	21.62
				1RB High	1 Pos 24	22.00	21.57	21.69
				50% RB Low	12 Pos 0	22.00	21.34	20.90
				50% RB Mid	12 Pos 6	22.00	21.43	20.92
				50% RB High	12 Pos 11	22.00	21.44	21.02
				100% RB	25 Pos 0	22.00	21.43	21.02

B.2.2.7 LTE Band 17 FDD

SAR Measurement for LTE Band 17 FDD (Frequency range: 704 – 716MHz) is covered by LTE Band 12 FDD (Frequency range: 699 – 716MHz) due to overlapping frequency range, same maximum tune-up and same bandwidth.

B.2.2.8 LTE Band 26 FDD

Band	BW	Channel#	Freq (MHz)	% RB Allocation	RB Position	Factory Upper Tolerance (dBm)	Measured Output Power (dBm)	
							QPSK	16-QAM
LTE26	15 MHz	26775	821.5	1RB Low	1 Pos 0	22.00	21.48	21.74
				1RB Mid	1 Pos 38	22.00	21.65	21.93
				1RB High	1 Pos 74	22.00	21.66	21.90
				50% RB Low	38 Pos 0	22.00	21.50	21.10
				50% RB Mid	38 Pos 19	22.00	21.61	21.22
				50% RB High	38 Pos 39	22.00	21.65	21.27
				100% RB	75 Pos 0	22.00	21.81	21.43
		26865	831.5	1RB Low	1 Pos 0	22.00	21.61	21.96
				1RB Mid	1 Pos 38	22.00	21.45	21.82
				1RB High	1 Pos 74	22.00	21.61	21.78
				50% RB Low	38 Pos 0	22.00	21.62	21.15
				50% RB Mid	38 Pos 19	22.00	21.53	21.12
				50% RB High	38 Pos 39	22.00	21.56	21.12
				100% RB	75 Pos 0	22.00	21.58	21.11
		26965	841.5	1RB Low	1 Pos 0	22.00	21.39	21.60
				1RB Mid	1 Pos 38	22.00	21.57	21.72
				1RB High	1 Pos 74	22.00	21.50	21.76
				50% RB Low	38 Pos 0	22.00	21.59	21.16
				50% RB Mid	38 Pos 19	22.00	21.72	21.27
				50% RB High	38 Pos 39	22.00	21.69	21.19
				100% RB	75 Pos 0	22.00	21.88	21.41
	10 MHz	26750	820	1RB Low	1 Pos 0	22.00	21.41	21.56
				1RB Mid	1 Pos 24	22.00	21.48	21.61
				1RB High	1 Pos 49	22.00	21.63	21.76
				50% RB Low	25 Pos 0	22.00	21.52	21.15
				50% RB Mid	25 Pos 12	22.00	21.55	21.24
				50% RB High	25 Pos 24	22.00	21.64	21.32
				100% RB	50 Pos 0	22.00	21.59	21.19
		26865	831.5	1RB Low	1 Pos 0	22.00	21.73	21.87
				1RB Mid	1 Pos 24	22.00	21.56	21.75
				1RB High	1 Pos 49	22.00	21.66	21.89
				50% RB Low	25 Pos 0	22.00	21.59	21.18
				50% RB Mid	25 Pos 12	22.00	21.54	21.13
				50% RB High	25 Pos 24	22.00	21.57	21.17
				100% RB	50 Pos 0	22.00	21.53	21.14
		26990	844	1RB Low	1 Pos 0	22.00	21.59	21.80
				1RB Mid	1 Pos 24	22.00	21.71	21.88
				1RB High	1 Pos 49	22.00	21.63	21.83
				50% RB Low	25 Pos 0	22.00	21.70	21.19
				50% RB Mid	25 Pos 12	22.00	21.70	21.26
				50% RB High	25 Pos 24	22.00	21.61	21.29
				100% RB	50 Pos 0	22.00	21.72	21.23
	5.0 MHz	26715	816.5	1RB Low	1 Pos 0	22.00	21.54	21.66
				1RB Mid	1 Pos 12	22.00	21.47	21.64
				1RB High	1 Pos 24	22.00	21.53	21.68
				50% RB Low	12 Pos 0	22.00	21.45	20.93
				50% RB Mid	12 Pos 6	22.00	21.49	21.04
				50% RB High	12 Pos 11	22.00	21.47	20.98
				100% RB	25 Pos 0	22.00	21.38	20.95
		26865	831.5	1RB Low	1 Pos 0	22.00	21.54	21.71
				1RB Mid	1 Pos 12	22.00	21.47	21.65
				1RB High	1 Pos 24	22.00	21.52	21.73
				50% RB Low	12 Pos 0	22.00	21.47	20.96
				50% RB Mid	12 Pos 6	22.00	21.41	20.95
				50% RB High	12 Pos 11	22.00	21.44	20.96
				100% RB	25 Pos 0	22.00	21.42	20.94
		27015	846.5	1RB Low	1 Pos 0	22.00	21.68	21.65
				1RB Mid	1 Pos 12	22.00	21.65	21.63
				1RB High	1 Pos 24	22.00	21.64	21.63
				50% RB Low	12 Pos 0	22.00	21.55	21.04
				50% RB Mid	12 Pos 6	22.00	21.58	21.09
				50% RB High	12 Pos 11	22.00	21.61	21.06
				100% RB	25 Pos 0	22.00	21.64	21.08

Band	BW	Channel#	Freq (MHz)	% RB Allocation	RB Position	Factory Upper Tolerance (dBm)	Measured Output Power (dBm)	
							QPSK	16-QAM
LTE26	3.0 MHz	26705	815.5	1RB Low	1 Pos 0	22.00	21.45	21.73
				1RB Mid	1 Pos 7	22.00	21.42	21.42
				1RB High	1 Pos 14	22.00	21.36	21.39
				50% RB Low	8 Pos 0	22.00	21.46	21.03
				50% RB Mid	8 Pos 4	22.00	21.45	21.05
				50% RB High	8 Pos 7	22.00	21.49	21.06
				100% RB	15 Pos 0	22.00	21.43	20.96
		26865	831.5	1RB Low	1 Pos 0	22.00	21.61	21.51
				1RB Mid	1 Pos 7	22.00	21.64	21.52
				1RB High	1 Pos 14	22.00	21.54	21.93
				50% RB Low	8 Pos 0	22.00	21.45	21.08
				50% RB Mid	8 Pos 4	22.00	21.45	21.04
				50% RB High	8 Pos 7	22.00	21.45	21.05
				100% RB	15 Pos 0	22.00	21.46	21.01
		27025	847.5	1RB Low	1 Pos 0	22.00	21.63	21.90
				1RB Mid	1 Pos 7	22.00	21.65	22.00
				1RB High	1 Pos 14	22.00	21.55	21.86
				50% RB Low	8 Pos 0	22.00	21.52	21.12
				50% RB Mid	8 Pos 4	22.00	21.58	21.11
				50% RB High	8 Pos 7	22.00	21.57	21.10
				100% RB	15 Pos 0	22.00	21.66	21.11
	1.4 MHz	26697	814.7	1RB Low	1 Pos 0	22.00	21.49	21.34
				1RB Mid	1 Pos 2	22.00	21.58	21.30
				1RB High	1 Pos 5	22.00	21.55	21.75
				50% RB Low	3 Pos 0	22.00	21.44	21.67
				50% RB Mid	3 Pos 1	22.00	21.43	21.53
				50% RB High	3 Pos 2	22.00	21.46	21.67
				100% RB	6 Pos 0	22.00	21.40	21.07
		26865	831.5	1RB Low	1 Pos 0	22.00	21.45	21.62
				1RB Mid	1 Pos 2	22.00	21.47	21.59
				1RB High	1 Pos 5	22.00	21.49	21.75
				50% RB Low	3 Pos 0	22.00	21.42	21.58
				50% RB Mid	3 Pos 1	22.00	21.38	21.57
				50% RB High	3 Pos 2	22.00	21.36	21.58
				100% RB	6 Pos 0	22.00	21.44	20.96
		27033	848.3	1RB Low	1 Pos 0	22.00	21.63	21.64
				1RB Mid	1 Pos 2	22.00	21.61	21.59
				1RB High	1 Pos 5	22.00	21.58	21.81
				50% RB Low	3 Pos 0	22.00	21.60	21.55
				50% RB Mid	3 Pos 1	22.00	21.57	21.64
				50% RB High	3 Pos 2	22.00	21.56	21.51
				100% RB	6 Pos 0	22.00	21.46	21.07

B.2.2.9 LTE Band 30 FDD

Band	BW	Channel#	Freq (MHz)	% RB Allocation	RB Position	Factory Upper Tolerance (dBm)	Measured Output Power (dBm)	
							QPSK	16-QAM
LTE30	10 MHz	27710	2310	1RB Low	1 Pos 0	13.50	13.23	13.37
				1RB Mid	1 Pos 24	13.50	13.13	13.27
				1RB High	1 Pos 49	13.50	13.34	13.49
				50% RB Low	25 Pos 0	13.50	13.30	13.31
				50% RB Mid	25 Pos 12	13.50	13.34	13.37
				50% RB High	25 Pos 24	13.50	13.31	13.36
				100% RB	50 Pos 0	13.50	13.42	13.39
	5.0 MHz	27710	2310	1RB Low	1 Pos 0	13.50	13.20	13.45
				1RB Mid	1 Pos 12	13.50	13.27	13.41
				1RB High	1 Pos 24	13.50	13.23	13.49
				50% RB Low	12 Pos 0	13.50	13.27	13.20
				50% RB Mid	12 Pos 6	13.50	13.27	13.48
				50% RB High	12 Pos 11	13.50	13.22	13.22
				100% RB	25 Pos 0	13.50	13.25	13.25

B.2.2.10 LTE Band 38 TDD

Band	BW	Channel#	Freq (MHz)	% RB Allocation	RB Position	Factory Upper Tolerance (dBm)	Measured Output Power (dBm)	
							QPSK	16-QAM
LTE38	20 MHz	37850	2580	1RB Low	1 Pos 0	16.50	15.92	15.87
				1RB Mid	1 Pos 50	16.50	15.86	15.79
				1RB High	1 Pos 99	16.50	15.79	15.75
				50% RB Low	50 Pos 0	16.50	15.87	15.91
				50% RB Mid	50 Pos 24	16.50	15.85	15.82
				50% RB High	50 Pos 50	16.50	15.76	15.80
				100% RB	100 Pos 0	16.50	15.81	15.83
		38000	2595	1RB Low	1 Pos 0	16.50	15.80	15.85
				1RB Mid	1 Pos 50	16.50	15.73	15.77
				1RB High	1 Pos 99	16.50	15.70	15.74
				50% RB Low	50 Pos 0	16.50	15.67	15.74
				50% RB Mid	50 Pos 24	16.50	15.84	15.69
				50% RB High	50 Pos 50	16.50	15.63	15.67
				100% RB	100 Pos 0	16.50	15.66	15.71
		38150	2610	1RB Low	1 Pos 0	16.50	15.61	16.19
				1RB Mid	1 Pos 50	16.50	15.55	16.13
				1RB High	1 Pos 99	16.50	15.58	16.19
				50% RB Low	50 Pos 0	16.50	15.62	15.64
				50% RB Mid	50 Pos 24	16.50	15.61	15.62
				50% RB High	50 Pos 50	16.50	15.64	15.62
				100% RB	100 Pos 0	16.50	15.61	15.66
	15 MHz	37825	2577.5	1RB Low	1 Pos 0	16.50	15.87	15.97
				1RB Mid	1 Pos 38	16.50	15.82	15.90
				1RB High	1 Pos 74	16.50	15.73	15.83
				50% RB Low	38 Pos 0	16.50	15.89	16.03
				50% RB Mid	38 Pos 19	16.50	15.89	16.04
				50% RB High	38 Pos 39	16.50	15.86	15.99
				100% RB	75 Pos 0	16.50	15.86	15.86
		38000	2595	1RB Low	1 Pos 0	16.50	15.86	16.14
				1RB Mid	1 Pos 38	16.50	15.86	16.09
				1RB High	1 Pos 74	16.50	15.79	16.04
				50% RB Low	38 Pos 0	16.50	15.69	15.72
				50% RB Mid	38 Pos 19	16.50	15.68	15.71
				50% RB High	38 Pos 39	16.50	15.65	15.69
				100% RB	75 Pos 0	16.50	15.66	15.76
		38175	2612.5	1RB Low	1 Pos 0	16.50	15.68	15.97
				1RB Mid	1 Pos 38	16.50	15.68	15.97
				1RB High	1 Pos 74	16.50	15.69	15.98
				50% RB Low	38 Pos 0	16.50	15.63	15.67
				50% RB Mid	38 Pos 19	16.50	15.62	15.66
				50% RB High	38 Pos 39	16.50	15.63	15.66
				100% RB	75 Pos 0	16.50	15.59	15.66
	10 MHz	37800	2575	1RB Low	1 Pos 0	16.50	16.12	16.16
				1RB Mid	1 Pos 24	16.50	16.06	16.12
				1RB High	1 Pos 49	16.50	16.06	16.09
				50% RB Low	25 Pos 0	16.50	15.96	16.05
				50% RB Mid	25 Pos 12	16.50	15.95	16.04
				50% RB High	25 Pos 24	16.50	15.96	16.05
				100% RB	50 Pos 0	16.50	15.88	15.95
		38000	2595	1RB Low	1 Pos 0	16.50	15.96	16.23
				1RB Mid	1 Pos 24	16.50	15.92	16.15
				1RB High	1 Pos 49	16.50	15.89	16.13
				50% RB Low	25 Pos 0	16.50	15.76	15.94
				50% RB Mid	25 Pos 12	16.50	15.74	15.92
				50% RB High	25 Pos 24	16.50	15.74	15.91
				100% RB	50 Pos 0	16.50	15.74	15.84
		38200	2615	1RB Low	1 Pos 0	16.50	15.69	15.97
				1RB Mid	1 Pos 24	16.50	15.66	15.94
				1RB High	1 Pos 49	16.50	15.69	15.97
				50% RB Low	25 Pos 0	16.50	15.66	15.76
				50% RB Mid	25 Pos 12	16.50	15.61	15.74
				50% RB High	25 Pos 24	16.50	15.62	15.75
				100% RB	50 Pos 0	16.50	15.67	15.72

Band	BW	Channel#	Freq (MHz)	% RB Allocation	RB Position	Factory Upper Tolerance (dBm)	Measured Output Power (dBm)	
							QPSK	16-QAM
LTE38	5.0 MHz	37775	2572.5	1RB Low	1 Pos 0	16.50	15.90	16.07
				1RB Mid	1 Pos 12	16.50	15.86	16.04
				1RB High	1 Pos 24	16.50	15.90	16.05
				50% RB Low	12 Pos 0	16.50	15.95	16.05
				50% RB Mid	12 Pos 6	16.50	15.94	16.01
				50% RB High	12 Pos 11	16.50	15.94	16.03
				100% RB	25 Pos 0	16.50	15.94	15.99
		38000	2595	1RB Low	1 Pos 0	16.50	15.75	16.11
				1RB Mid	1 Pos 12	16.50	15.73	16.06
				1RB High	1 Pos 24	16.50	15.73	16.07
				50% RB Low	12 Pos 0	16.50	15.72	15.87
				50% RB Mid	12 Pos 6	16.50	15.72	15.76
				50% RB High	12 Pos 11	16.50	15.71	15.87
				100% RB	25 Pos 0	16.50	15.72	15.87
		38225	2617.5	1RB Low	1 Pos 0	16.50	15.68	16.09
				1RB Mid	1 Pos 12	16.50	15.63	16.03
				1RB High	1 Pos 24	16.50	15.67	16.06
				50% RB Low	12 Pos 0	16.50	15.69	15.71
				50% RB Mid	12 Pos 6	16.50	15.70	15.67
				50% RB High	12 Pos 11	16.50	15.67	15.71
				100% RB	25 Pos 0	16.50	15.69	15.70

B.2.2.11 LTE Band 41 TDD

Band	BW	Channel#	Freq (MHz)	% RB Allocation	RB Position	Factory Upper Tolerance (dBm)	Measured Output Power (dBm)	
							QPSK	16-QAM
LTE41	20 MHz	39750	2506	1RB Low	1 Pos 0	14.50	13.45	14.04
				1RB Mid	1 Pos 50	14.50	13.44	14.06
				1RB High	1 Pos 99	14.50	13.42	14.05
				50% RB Low	50 Pos 0	14.50	13.47	13.54
				50% RB Mid	50 Pos 24	14.50	13.50	13.56
				50% RB High	50 Pos 50	14.50	13.46	13.52
				100% RB	100 Pos 0	14.50	13.61	13.57
		40185	2549.5	1RB Low	1 Pos 0	14.50	13.61	13.52
				1RB Mid	1 Pos 50	14.50	13.58	13.48
				1RB High	1 Pos 99	14.50	13.67	13.56
				50% RB Low	50 Pos 0	14.50	13.51	13.53
				50% RB Mid	50 Pos 24	14.50	13.48	13.49
				50% RB High	50 Pos 50	14.50	13.53	13.54
				100% RB	100 Pos 0	14.50	13.50	13.49
		40620	2593	1RB Low	1 Pos 0	14.50	13.60	13.66
				1RB Mid	1 Pos 50	14.50	13.59	13.66
				1RB High	1 Pos 99	14.50	13.68	13.74
				50% RB Low	50 Pos 0	14.50	13.53	13.59
				50% RB Mid	50 Pos 24	14.50	13.53	13.58
				50% RB High	50 Pos 50	14.50	13.57	13.63
				100% RB	100 Pos 0	14.50	13.57	13.57
		41055	2636.5	1RB Low	1 Pos 0	14.50	13.67	14.33
				1RB Mid	1 Pos 50	14.50	13.62	14.30
				1RB High	1 Pos 99	14.50	13.68	14.37
				50% RB Low	50 Pos 0	14.50	13.70	13.80
				50% RB Mid	50 Pos 24	14.50	13.65	13.76
				50% RB High	50 Pos 50	14.50	13.71	13.82
				100% RB	100 Pos 0	14.50	13.65	13.76
		41490	2680	1RB Low	1 Pos 0	14.50	13.78	13.66
				1RB Mid	1 Pos 50	14.50	13.71	13.61
				1RB High	1 Pos 99	14.50	13.82	13.72
				50% RB Low	50 Pos 0	14.50	13.65	13.65
				50% RB Mid	50 Pos 24	14.50	13.64	13.64
				50% RB High	50 Pos 50	14.50	13.66	13.66
				100% RB	100 Pos 0	14.50	13.70	13.68

Band	BW	Channel#	Freq (MHz)	% RB Allocation	RB Position	Factory Upper Tolerance (dBm)	Measured Output Power (dBm)	
							QPSK	16-QAM
LTE41	15 MHz	39750	2506	1RB Low	1 Pos 0	14.50	13.55	13.82
				1RB Mid	1 Pos 38	14.50	13.55	13.83
				1RB High	1 Pos 74	14.50	13.49	13.76
				50% RB Low	38 Pos 0	14.50	13.52	13.55
				50% RB Mid	38 Pos 19	14.50	13.55	13.57
				50% RB High	38 Pos 39	14.50	13.51	13.52
				100% RB	75 Pos 0	14.50	13.45	13.55
		40185	2549.5	1RB Low	1 Pos 0	14.50	13.56	13.81
				1RB Mid	1 Pos 38	14.50	13.54	13.82
				1RB High	1 Pos 74	14.50	13.56	13.84
				50% RB Low	38 Pos 0	14.50	13.53	13.64
				50% RB Mid	38 Pos 19	14.50	13.53	13.65
				50% RB High	38 Pos 39	14.50	13.55	13.63
				100% RB	75 Pos 0	14.50	13.50	13.57
		40620	2593	1RB Low	1 Pos 0	14.50	13.67	13.92
				1RB Mid	1 Pos 38	14.50	13.73	13.99
				1RB High	1 Pos 74	14.50	13.72	13.97
				50% RB Low	38 Pos 0	14.50	13.54	13.57
				50% RB Mid	38 Pos 19	14.50	13.59	13.64
				50% RB High	38 Pos 39	14.50	13.55	13.59
				100% RB	75 Pos 0	14.50	13.56	13.61
		41055	2636.5	1RB Low	1 Pos 0	14.50	13.79	14.09
				1RB Mid	1 Pos 38	14.50	13.75	14.08
				1RB High	1 Pos 74	14.50	13.83	14.14
				50% RB Low	38 Pos 0	14.50	13.72	13.76
				50% RB Mid	38 Pos 19	14.50	13.68	13.73
				50% RB High	38 Pos 39	14.50	13.71	13.76
				100% RB	75 Pos 0	14.50	13.68	13.69
		41490	2680.0	1RB Low	1 Pos 0	14.50	13.59	13.89
				1RB Mid	1 Pos 38	14.50	13.62	13.92
				1RB High	1 Pos 74	14.50	13.69	14.00
				50% RB Low	38 Pos 0	14.50	13.62	13.70
				50% RB Mid	38 Pos 19	14.50	13.64	13.74
				50% RB High	38 Pos 39	14.50	13.64	13.77
				100% RB	75 Pos 0	14.50	13.65	13.72

Band	BW	Channel#	Freq (MHz)	% RB Allocation	RB Position	Factory Upper Tolerance (dBm)	Measured Output Power (dBm)	
							QPSK	16-QAM
LTE41	10 MHz	39750	2506	1RB Low	1 Pos 0	14.50	13.61	13.86
				1RB Mid	1 Pos 24	14.50	13.55	13.85
				1RB High	1 Pos 49	14.50	13.52	13.81
				50% RB Low	25 Pos 0	14.50	13.50	13.64
				50% RB Mid	25 Pos 12	14.50	13.51	13.64
				50% RB High	25 Pos 24	14.50	13.50	13.63
				100% RB	50 Pos 0	14.50	13.48	13.55
		40185	2549.5	1RB Low	1 Pos 0	14.50	13.55	13.84
				1RB Mid	1 Pos 24	14.50	13.52	13.82
				1RB High	1 Pos 49	14.50	13.54	13.85
				50% RB Low	25 Pos 0	14.50	13.63	13.62
				50% RB Mid	25 Pos 12	14.50	13.61	13.59
				50% RB High	25 Pos 24	14.50	13.64	13.62
				100% RB	50 Pos 0	14.50	13.52	13.62
		40620	2593	1RB Low	1 Pos 0	14.50	13.76	14.00
				1RB Mid	1 Pos 24	14.50	13.75	13.99
				1RB High	1 Pos 49	14.50	13.81	14.04
				50% RB Low	25 Pos 0	14.50	13.55	13.72
				50% RB Mid	25 Pos 12	14.50	13.58	13.76
				100% RB	50 Pos 0	14.50	13.58	13.76
		41055	2636.5	1RB Low	1 Pos 0	14.50	13.59	13.69
				1RB Mid	1 Pos 24	14.50	13.87	14.17
				1RB High	1 Pos 49	14.50	13.80	14.09
				50% RB Low	25 Pos 0	14.50	13.87	14.18
				50% RB Mid	25 Pos 12	14.50	13.76	13.92
				100% RB	50 Pos 0	14.50	13.71	13.86
		41490	2680	1RB Low	1 Pos 0	14.50	13.75	13.89
				1RB Mid	1 Pos 24	14.50	13.72	13.79
				1RB High	1 Pos 49	14.50	13.65	13.96
				50% RB Low	25 Pos 0	14.50	13.61	13.95
				50% RB Mid	25 Pos 12	14.50	13.68	14.03
				100% RB	50 Pos 0	14.50	13.74	13.70

Band	BW	Channel#	Freq (MHz)	% RB Allocation	RB Position	Factory Upper Tolerance (dBm)	Measured Output Power (dBm)	
							QPSK	16-QAM
LTE41	5.0 MHz	39750	2506	1RB Low	1 Pos 0	14.50	13.45	13.81
				1RB Mid	1 Pos 12	14.50	13.47	13.79
				1RB High	1 Pos 24	14.50	13.47	13.80
				50% RB Low	12 Pos 0	14.50	13.42	13.48
				50% RB Mid	12 Pos 6	14.50	13.50	13.58
				50% RB High	12 Pos 11	14.50	13.47	13.52
				100% RB	25 Pos 0	14.50	13.45	13.52
		40185	2549.5	1RB Low	1 Pos 0	14.50	13.54	13.96
				1RB Mid	1 Pos 12	14.50	13.46	13.91
				1RB High	1 Pos 24	14.50	13.51	13.96
				50% RB Low	12 Pos 0	14.50	13.58	13.61
				50% RB Mid	12 Pos 6	14.50	13.52	13.53
				50% RB High	12 Pos 11	14.50	13.52	13.55
				100% RB	25 Pos 0	14.50	13.53	13.56
		40620	2593	1RB Low	1 Pos 0	14.50	13.47	13.55
				1RB Mid	1 Pos 12	14.50	13.48	13.57
				1RB High	1 Pos 24	14.50	13.48	13.59
				50% RB Low	12 Pos 0	14.50	13.49	13.52
				50% RB Mid	12 Pos 6	14.50	13.60	13.62
				50% RB High	12 Pos 11	14.50	13.56	13.56
				100% RB	25 Pos 0	14.50	13.54	13.57
		41055	2636.5	1RB Low	1 Pos 0	14.50	13.72	14.06
				1RB Mid	1 Pos 12	14.50	13.65	13.98
				1RB High	1 Pos 24	14.50	13.71	14.06
				50% RB Low	12 Pos 0	14.50	13.72	13.88
				50% RB Mid	12 Pos 6	14.50	13.69	13.74
				50% RB High	12 Pos 11	14.50	13.65	13.80
				100% RB	25 Pos 0	14.50	13.66	13.82
		41490	2680	1RB Low	1 Pos 0	14.50	13.61	13.96
				1RB Mid	1 Pos 12	14.50	13.62	13.98
				1RB High	1 Pos 24	14.50	13.68	14.03
				50% RB Low	12 Pos 0	14.50	13.66	13.67
				50% RB Mid	12 Pos 6	14.50	13.67	13.64
				50% RB High	12 Pos 11	14.50	13.63	13.67
				100% RB	25 Pos 0	14.50	13.63	13.64

B.2.2.1 LTE Band 66 FDD

Band	BW	Channel#	Freq (MHz)	% RB Allocation	RB Position	Factory Upper Tolerance (dBm)	Measured Output Power (dBm)	
							QPSK	16-QAM
LTE66	20 MHz	132072	1720	1RB Low	1 Pos 0	13.50	12.64	13.20
				1RB Mid	1 Pos 50	13.50	12.89	13.41
				1RB High	1 Pos 99	13.50	12.84	13.43
				50% RB Low	50 Pos 0	13.50	12.92	12.82
				50% RB Mid	50 Pos 24	13.50	12.93	12.90
				50% RB High	50 Pos 50	13.50	12.85	12.84
				100% RB	100 Pos 0	13.50	13.14	13.09
		132422	1755	1RB Low	1 Pos 0	13.50	13.04	13.43
				1RB Mid	1 Pos 50	13.50	13.33	13.45
				1RB High	1 Pos 99	13.50	13.17	13.41
				50% RB Low	50 Pos 0	13.50	13.37	13.27
				50% RB Mid	50 Pos 24	13.50	13.42	13.31
				50% RB High	50 Pos 50	13.50	13.30	13.16
				100% RB	100 Pos 0	13.50	13.33	13.43
		132572	1770	1RB Low	1 Pos 0	13.50	13.42	13.28
				1RB Mid	1 Pos 50	13.50	13.24	13.13
				1RB High	1 Pos 99	13.50	13.27	13.14
				50% RB Low	50 Pos 0	13.50	13.23	13.14
				50% RB Mid	50 Pos 24	13.50	13.05	12.93
				50% RB High	50 Pos 50	13.50	12.98	12.89
				100% RB	100 Pos 0	13.50	13.20	13.18
	15 MHz	132047	1717.5	1RB Low	1 Pos 0	13.50	12.26	12.84
				1RB Mid	1 Pos 38	13.50	12.46	13.02
				1RB High	1 Pos 74	13.50	12.53	13.09
				50% RB Low	38 Pos 0	13.50	12.84	12.76
				50% RB Mid	38 Pos 19	13.50	12.89	12.79
				50% RB High	38 Pos 39	13.50	12.87	12.82
				100% RB	75 Pos 0	13.50	13.02	12.94
		132422	1755	1RB Low	1 Pos 0	13.50	13.20	13.45
				1RB Mid	1 Pos 38	13.50	13.32	13.32
				1RB High	1 Pos 74	13.50	13.29	13.41
				50% RB Low	38 Pos 0	13.50	13.32	13.28
				50% RB Mid	38 Pos 19	13.50	13.36	13.34
				50% RB High	38 Pos 39	13.50	13.27	13.26
				100% RB	75 Pos 0	13.50	13.45	13.37
		132597	1772.5	1RB Low	1 Pos 0	13.50	13.06	13.50
				1RB Mid	1 Pos 38	13.50	12.74	13.20
				1RB High	1 Pos 74	13.50	12.87	13.33
				50% RB Low	38 Pos 0	13.50	13.15	13.00
				50% RB Mid	38 Pos 19	13.50	12.99	12.81
				50% RB High	38 Pos 39	13.50	12.95	12.85
				100% RB	75 Pos 0	13.50	13.20	13.01
	10 MHz	132022	1715	1RB Low	1 Pos 0	13.50	12.74	13.05
				1RB Mid	1 Pos 24	13.50	12.87	13.13
				1RB High	1 Pos 49	13.50	13.11	13.39
				50% RB Low	25 Pos 0	13.50	12.75	12.67
				50% RB Mid	25 Pos 12	13.50	12.77	12.71
				50% RB High	25 Pos 24	13.50	12.82	12.79
				100% RB	50 Pos 0	13.50	12.88	12.85
		132422	1755	1RB Low	1 Pos 0	13.50	13.24	13.27
				1RB Mid	1 Pos 24	13.50	13.31	13.35
				1RB High	1 Pos 49	13.50	13.21	13.25
				50% RB Low	25 Pos 0	13.50	13.20	13.12
				50% RB Mid	25 Pos 12	13.50	13.27	13.22
				50% RB High	25 Pos 24	13.50	13.24	13.18
				100% RB	50 Pos 0	13.50	13.34	13.38
		132622	1775	1RB Low	1 Pos 0	13.50	13.19	13.48
				1RB Mid	1 Pos 24	13.50	12.98	13.26
				1RB High	1 Pos 49	13.50	13.17	13.46
				50% RB Low	25 Pos 0	13.50	12.96	12.85
				50% RB Mid	25 Pos 12	13.50	12.90	12.78
				50% RB High	25 Pos 24	13.50	12.98	12.86
				100% RB	50 Pos 0	13.50	13.06	12.99

Band	BW	Channel#	Freq (MHz)	% RB Allocation	RB Position	Factory Upper Tolerance (dBm)	Measured Output Power (dBm)	
							QPSK	16-QAM
LTE66	5.0 MHz	131997	1712.5	1RB Low	1 Pos 0	13.50	12.78	12.63
				1RB Mid	1 Pos 12	13.50	12.87	12.73
				1RB High	1 Pos 24	13.50	12.89	12.72
				50% RB Low	12 Pos 0	13.50	12.62	12.57
				50% RB Mid	12 Pos 6	13.50	12.77	12.71
				50% RB High	12 Pos 11	13.50	12.63	12.57
				100% RB	25 Pos 0	13.50	12.63	12.56
		132422	1755	1RB Low	1 Pos 0	13.50	13.30	13.43
				1RB Mid	1 Pos 12	13.50	13.40	13.28
				1RB High	1 Pos 24	13.50	13.38	13.42
				50% RB Low	12 Pos 0	13.50	13.21	13.17
				50% RB Mid	12 Pos 6	13.50	13.24	13.21
				50% RB High	12 Pos 11	13.50	13.24	13.21
				100% RB	25 Pos 0	13.50	13.20	13.18
		132647	1777.5	1RB Low	1 Pos 0	13.50	12.71	13.22
				1RB Mid	1 Pos 12	13.50	12.79	13.24
				1RB High	1 Pos 24	13.50	12.96	13.42
				50% RB Low	12 Pos 0	13.50	12.79	12.63
				50% RB Mid	12 Pos 6	13.50	12.96	12.86
				50% RB High	12 Pos 11	13.50	12.76	12.62
				100% RB	25 Pos 0	13.50	12.84	12.72
	3.0 MHz	131987	1711.5	1RB Low	1 Pos 0	13.50	12.59	12.44
				1RB Mid	1 Pos 7	13.50	12.72	12.98
				1RB High	1 Pos 14	13.50	12.54	12.56
				50% RB Low	8 Pos 0	13.50	12.59	12.42
				50% RB Mid	8 Pos 4	13.50	12.67	12.50
				50% RB High	8 Pos 7	13.50	12.73	12.43
				100% RB	15 Pos 0	13.50	12.63	12.56
		132422	1755	1RB Low	1 Pos 0	13.50	12.92	13.44
				1RB Mid	1 Pos 7	13.50	13.16	13.44
				1RB High	1 Pos 14	13.50	13.08	13.33
				50% RB Low	8 Pos 0	13.50	13.16	13.11
				50% RB Mid	8 Pos 4	13.50	13.21	13.22
				50% RB High	8 Pos 7	13.50	13.12	13.06
				100% RB	15 Pos 0	13.50	13.27	13.13
		132657	1778.5	1RB Low	1 Pos 0	13.50	13.06	13.06
				1RB Mid	1 Pos 7	13.50	13.18	13.39
				1RB High	1 Pos 14	13.50	12.97	13.41
				50% RB Low	8 Pos 0	13.50	12.82	12.69
				50% RB Mid	8 Pos 4	13.50	12.91	12.95
				50% RB High	8 Pos 7	13.50	12.80	12.80
				100% RB	15 Pos 0	13.50	12.97	12.83
	1.4 MHz	131979	1710	1RB Low	1 Pos 0	13.50	12.79	12.93
				1RB Mid	1 Pos 2	13.50	12.73	12.63
				1RB High	1 Pos 5	13.50	12.91	12.69
				50% RB Low	3 Pos 0	13.50	12.51	12.54
				50% RB Mid	3 Pos 1	13.50	12.51	12.39
				50% RB High	3 Pos 2	13.50	12.51	12.54
				100% RB	6 Pos 0	13.50	12.35	12.37
		132422	1755	1RB Low	1 Pos 0	13.50	13.06	13.49
				1RB Mid	1 Pos 2	13.50	13.25	12.92
				1RB High	1 Pos 5	13.50	12.99	13.42
				50% RB Low	3 Pos 0	13.50	13.21	12.92
				50% RB Mid	3 Pos 1	13.50	13.19	12.93
				50% RB High	3 Pos 2	13.50	13.22	12.93
				100% RB	6 Pos 0	13.50	13.19	13.02
		132665	1779.3	1RB Low	1 Pos 0	13.50	12.60	12.75
				1RB Mid	1 Pos 2	13.50	12.58	13.00
				1RB High	1 Pos 5	13.50	12.90	13.03
				50% RB Low	3 Pos 0	13.50	13.02	12.61
				50% RB Mid	3 Pos 1	13.50	13.00	12.59
				50% RB High	3 Pos 2	13.50	13.09	12.60
				100% RB	6 Pos 0	13.50	12.80	13.03

B.3 Tissue Parameters Measurement

Body TSL

Body TSL	Target TSL		Measured TSL		Deviation %		
Freq (MHz)	ε'(F/m)	σ(S/m)	ε'(F/m)	σ(S/m)	Deviation ε'	Deviation σ	Date
750.0	55.53	0.96	53.67	0.89	-3.35	-7.29	2020-12-08
835.0	55.23	0.98	53.5	0.92	-3.13	-6.12	2020-12-08
	55.23	0.98	52.42	0.96	-5.09	-2.04	2020-12-10
1750.0	53.43	1.49	50.77	1.45	-4.98	-2.68	2020-12-10
1900.0	53.3	1.52	51.66	1.54	-3.08	1.32	2020-12-08
	53.3	1.52	50.57	1.56	-5.12	2.63	2020-12-10
2300.0	52.9	1.81	50.0	1.88	-5.48	3.87	2020-12-10
2600.0	52.51	2.16	49.48	2.17	-5.77	0.46	2020-12-10

See *Annex D* below for more details.

B.4 System Check Measurements

Body Measurements

Frequency (MHz)	Average	Target SAR (W/Kg)	Measured SAR (W/Kg)	Deviation to target (%)	Limit (%)	Date
750	1g	8.46	7.62	-9.92	±10	2020-12-08
	10g	5.59	5.04	-9.83		
	1g	8.46	7.86	-7.06		2020-12-09
	10g	5.59	5.18	-7.31		
835	1g	9.63	8.76	-9.03		2020-12-08
	10g	6.31	5.74	-9.03		
	1g	9.63	9.10	-5.50		2020-12-10
	10g	6.31	5.98	-5.23		
1750	1g	36.80	35.40	-3.80		2020-12-10
	10g	19.40	18.72	-3.51		
1900	1g	39.50	39.60	0.25		2020-12-08
	10g	20.70	20.60	-0.48		
	1g	39.50	38.60	-2.28		2020-12-10
	10g	20.70	20.20	-2.42		
2300	1g	47.20	47.00	-0.42		2020-12-10
	10g	22.60	22.40	-0.88		
2600	1g	54.60	53.00	-2.93		2020-12-10
	10g	24.20	23.40	-3.31		

See *Annex C* for more details.

B.5 SAR Test Results

B.5.1 WCDMA

Rate	Radio Band Name	Channel Number	Freq (MHz)	Test position mode	Position	Scaling Factor (dB)	Measured SAR 1g (W/Kg)	Reported SAR 1g (W/Kg)	Plot #
RMC 12.2kbps - 5MHz	Band 2	9262	1852.4	Tablet	Top edge	0.14	1.05	1.08	1
		9400	1880		Back Face	0.28	0.68	0.72	
					Right edge	0.28	0.17	0.19	
					Top edge	0.28	0.98	1.05	
		9538	1907.6		Top edge	0.22	0.99	1.04	
	Band 4	1413	1732.6		Back Face	0.67	0.65	0.76	2
					Right edge	0.67	0.22	0.26	
					Top edge	0.67	0.65	0.75	
	Band 5	4132	826.4		Top edge	0.32	0.84	0.90	
					Back Face	0.32	1.04	1.12	
					Right edge	0.32	1.10	1.18	3
		4183	836.6		Top edge	0.35	0.83	0.90	
					Back Face	0.35	1.08	1.17	
					Right edge	0.35	0.96	1.04	
		4233	846.6		Top edge	0.37	0.88	0.96	
					Back Face	0.37	0.97	1.05	
					Right edge	0.37	0.95	1.03	

B.5.2 LTE

B.5.2.1 LTE Band 2 FDD

Band	Modulation / BW	Channel Number	Freq (MHz)	Test position mode	Position	% RB Allocation	Scaling Factor (dB)	Measured SAR 1g (W/Kg)	Reported SAR 1g (W/Kg)	Plot #
LTE 2	QPSK / 20MHz	18700	1860	Tablet	Top Edge	1RB Mid	0.41	0.96	1.05	
						50RB Mid	0.45	0.98	1.08	4
		18900	1880		Top Edge	1RB Mid	0.28	0.96	1.02	
						50RB Mid	0.42	0.95	1.04	
						100RB Mid	0.30	1.00	1.07	
					Right Edge	1RB Mid	0.28	0.17	0.18	
						50RB Mid	0.42	0.17	0.18	
					Back Face	1RB Mid	0.28	0.70	0.75	
						50RB Mid	0.25	0.75	0.79	
		19100	1900		Top Edge	1RB Mid	0.44	0.96	1.06	
						50RB Mid	0.44	0.96	1.06	

B.5.2.2 LTE Band 7 FDD

Band	Modulation / BW	Channel Number	Freq (MHz)	Test position mode	Position	% RB Allocation	Scaling Factor (dB)	Measured SAR 1g (W/Kg)	Reported SAR 1g (W/Kg)	Plot #
LTE 7	QPSK / 20MHz	20850	2510	Tablet	Top Edge	1RB Mid	0.60	1.01	1.16	
						50RB Mid	0.63	1.02	1.18	5
					Right Edge	1RB Mid	0.60	0.67	0.77	
						50RB Mid	0.63	0.68	0.78	
		21100	2535		Top Edge	1RB Mid	0.63	0.91	1.05	
						50RB Mid	0.71	0.96	1.13	
						100RB Mid	0.48	1.00	1.12	
					Right Edge	1RB Mid	0.63	0.68	0.78	
						50RB Mid	0.71	0.70	0.83	
						100RB Mid	0.48	0.71	0.80	
					Back Face	1RB Mid	0.63	0.52	0.60	
						50RB Mid	0.71	0.55	0.65	
		21350	2560		Top Edge	1RB Mid	0.71	0.89	1.05	
						50RB Mid	0.73	0.90	1.06	
					Right Edge	1RB Mid	0.71	0.71	0.84	
						50RB Mid	0.73	0.71	0.84	

B.5.2.3 LTE Band 12 FDD

Band	Modulation / BW	Channel Number	Freq (MHz)	Test position mode	Position	% RB Allocation	Scaling Factor (dB)	Measured SAR 1g (W/Kg)	Reported SAR 1g (W/Kg)	Plot #
LTE 12	QPSK / 10MHz	23095	707.5	Tablet	Top Edge	1RB Mid	0.31	0.66	0.71	
						50RB Mid	0.18	0.69	0.72	
					Right Edge	1RB Mid	0.31	1.27	1.36	6
						50RB Mid	0.18	1.24	1.29	
						100RB Mid	0.07	1.28	1.30	
					Back Face	1RB Mid	0.31	0.88	0.94	
						50RB Mid	0.18	0.97	1.01	
						100RB Mid	0.07	0.99	1.01	

B.5.2.4 LTE Band 13 FDD

Band	Modulation / BW	Channel Number	Freq (MHz)	Test position mode	Position	% RB Allocation	Scaling Factor (dB)	Measured SAR 1g (W/Kg)	Reported SAR 1g (W/Kg)	Plot #
LTE 13	QPSK / 10MHz	23230	782	Tablet	Top Edge	1RB Mid	0.45	0.91	1.01	
						50RB Mid	0.43	0.92	1.01	
						100RB Mid	0.29	0.95	1.01	
					Right Edge	1RB Mid	0.45	1.30	1.44	
						50RB Mid	0.43	1.29	1.42	
						100RB Mid	0.29	1.35	1.44	7
					Back Face	1RB Mid	0.45	0.91	1.01	
						50RB Mid	0.43	0.85	0.93	
						100RB Mid	0.29	1.00	1.06	

B.5.2.5 LTE Band 26 FDD

Band	Modulation / BW	Channel Number	Freq (MHz)	Test position mode	Position	% RB Allocation	Scaling Factor (dB)	Measured SAR 1g (W/Kg)	Reported SAR 1g (W/Kg)	Plot #
LTE 26	QPSK / 15MHz	26775	821.5	Tablet	Top Edge	1RB Mid	0.35	1.03	1.12	
						50RB Mid	0.39	1.02	1.12	
					Right Edge	1RB Mid	0.35	1.29	1.40	
						50RB Mid	0.39	1.29	1.41	
					Back Face	1RB Mid	0.35	1.26	1.37	
						50RB Mid	0.39	1.28	1.40	
		26865	831.5		Top Edge	1RB Mid	0.55	1.03	1.17	
						50RB Mid	0.47	1.04	1.16	
						100RB Mid	0.47	1.07	1.19	
					Right Edge	1RB Mid	0.55	1.27	1.44	
						50RB Mid	0.47	1.26	1.40	
						100RB Mid	0.42	1.31	1.44	8
					Back Face	1RB Mid	0.55	1.12	1.27	
						50RB Mid	0.47	1.21	1.35	
						100RB Mid	0.47	1.23	1.37	
		26965	841.5		Top Edge	1RB Mid	0.43	1.08	1.19	
						50RB Mid	0.28	1.10	1.17	
					Right Edge	1RB Mid	0.43	1.30	1.44	
						50RB Mid	0.28	1.31	1.40	
					Back Face	1RB Mid	0.43	1.19	1.31	
						50RB Mid	0.28	1.21	1.29	

B.5.2.6 LTE Band 30 FDD

Band	Modulation / BW	Channel Number	Freq (MHz)	Test position mode	Position	% RB Allocation	Scaling Factor (dB)	Measured SAR 1g (W/Kg)	Reported SAR 1g (W/Kg)	Plot #
LTE 30	QPSK / 10MHz	27710	2310	Tablet	Top Edge	1RB Mid	0.37	1.07	1.17	9
						50RB Mid	0.16	1.09	1.13	
						100RB Mid	0.08	1.11	1.13	
					Right Edge	1RB Mid	0.37	0.26	0.28	
						50RB Mid	0.16	0.26	0.27	
					Back Face	1RB Mid	0.37	0.62	0.67	
						50RB Mid	0.16	0.68	0.70	

B.5.2.7 LTE Band 38 TDD

Band	Modulation / BW	Channel Number	Freq (MHz)	Test position mode	Position	% RB Allocation	Scaling Factor (dB)	Measured SAR 1g (W/Kg)	Reported SAR 1g (W/Kg)	Plot #
LTE 38	QPSK / 20MHz	37850	2580	Tablet	Top Edge	1RB Mid	0.64	0.91	1.06	
						50RB Mid	0.65	0.90	1.04	
					Right Edge	1RB Mid	0.64	0.84	0.97	
						50RB Mid	0.65	0.83	0.96	
		38000	2595		Top Edge	1RB Mid	0.77	0.86	1.02	
						50RB Mid	0.66	0.85	0.98	
						100RB Mid	0.84	0.86	1.04	
					Right Edge	1RB Mid	0.77	0.85	1.01	
						50RB Mid	0.66	0.85	0.98	
						100RB Mid	0.84	0.85	1.03	
					Back Face	1RB Mid	0.77	0.61	0.72	
						50RB Mid	0.66	0.68	0.80	
		38150	2610		Top Edge	1RB Mid	0.95	0.81	1.00	
						50RB Mid	0.89	0.80	0.99	10
					Right Edge	1RB Mid	0.95	0.88	1.09	
						50RB Mid	0.89	0.86	1.06	

B.5.2.8 LTE Band 41 TDD

Band	Modulation / BW	Channel Number	Freq (MHz)	Test position mode	Position	% RB Allocation	Scaling Factor (dB)	Measured SAR 1g (W/Kg)	Reported SAR 1g (W/Kg)	Plot #
LTE 41	QPSK / 20MHz	40620	2593	Tablet	Top Edge	1RB Mid	0.91	0.52	0.65	
						50RB Mid	0.97	0.53	0.66	11
					Right Edge	1RB Mid	0.91	0.34	0.42	
						50RB Mid	0.97	0.34	0.42	
					Back Face	1RB Mid	0.91	0.37	0.46	
						50RB Mid	0.97	0.41	0.51	

B.5.2.9 LTE Band 66 FDD

Band	Modulation / BW	Channel Number	Freq (MHz)	Test position mode	Position	% RB Allocation	Scaling Factor (dB)	Measured SAR 1g (W/Kg)	Reported SAR 1g (W/Kg)	Plot #
LTE 66	QPSK / 20MHz	132072	1720	Tablet	Top Edge	1RB Mid	0.61	0.73	0.84	
						50RB Mid	0.57	0.76	0.86	
					Back Face	1RB Mid	0.61	0.77	0.89	
						50RB Mid	0.57	0.78	0.89	
		132322	1745		Top Edge	1RB Mid	0.17	0.80	0.83	
						50RB Mid	0.08	0.82	0.84	
						100RB Mid	0.17	0.85	0.89	
					Right Edge	1RB Mid	0.17	0.22	0.22	
						50RB Mid	0.08	0.23	0.23	
					Back Face	1RB Mid	0.17	0.80	0.83	
						50RB Mid	0.08	0.81	0.83	
						100RB Mid	0.17	0.86	0.89	
		132572	1770		Top Edge	1RB Mid	0.26	0.80	0.85	
						50RB Mid	0.45	0.83	0.92	12
					Back Face	1RB Mid	0.26	0.78	0.83	
						50RB Mid	0.45	0.79	0.88	

B.5.3 SAR Measurement Variability

According to FCC OET KDB 865664, SAR Measurement variability is assessed when the maximum initial measured SAR is ≥0.8 W/kg for a certain band/mode. If the measured SAR value of the initial repeated measurement is <1.45 W/kg with <20% variation, only one repeated measurement is required to confirm that the results are not expected to have substantial variations.
A second repeated measurement is required only if the measured results for the initial repeated measurement are within 10% of the SAR limit or vary by more than 20%.
A third repeated measurement is required only if the original, first or second repeated measurement ≥1.5W/Kg and the ratio of largest to smallest SAR for the original, first and second repeated measurement is > 1.2.

Band / Mode	Position	Ch #	Freq. (MHz)	Measured SAR 1g (W/kg)	1st Repeated SAR 1g (W/Kg)	2nd Repeated SAR 1g (W/Kg)	Highest Ratio
LTE FDD 13 / QPSK – 10MHz	Right Edge	23230	782.0	1.35	1.33		1.02
LTE FDD 26 / QPSK – 15MHz	Right Edge	26865	831.5	1.31	1.30		1.01
LTE FDD 66 / QPSK – 20MHz	Back Face	132322	1745.0	0.86	0.86		1.00
WCDMA II / QPSK – 5MHz	Top Edge	9262	1852.4	1.05	1.05		1.00
LTE FDD 30 / QPSK – 10MHz	Top Edge	27710	2310.0	1.11	1.11		1.00
LTE FDD 7 / QPSK – 20MHz	Top Edge	20850	2510.0	1.02	1.01		1.01

B.5.4 Simultaneous Transmission SAR Evaluation

According to FCC OET KDB 447498 D01, when the sum of 1g SAR for all simultaneously transmitting antennas in an operating mode and exposure condition combination is within the SAR limit, SAR test exclusion applies to that simultaneous transmission configuration.

As commented on sections 3 and 5, this report only evaluates SAR for cellular transmission on the module , nevertheless in order to consider all possible simultaneous transmissions on the device for compliance, WLAN SAR values reported on document [1] mentioned on section 3 are considered.

All the values stated in the table below are the worst case found for standalone measurement with disregard of the transmission mode or channel where the worst case was found

Antenna	Position	Highest Reported SAR (1g) (W/Kg)			
		WWAN	WLAN 2.4GHz	WLAN 5GHz	Bluetooth
Main WWAN	Top Edge	1.19			
	Back Face	1.40			
	Right Edge	1.44			
Main WLAN	Top Edge		0.32	0.76	
	Back Face		0.50	1.17	
Aux WLAN	Top Edge		0.19	0.24	0.07
	Back Face		0.40	0.52	0.14

Position	Simultaneous Tx Antenna Combination				Σ SAR 1g (W/Kg)	Limit (W/kg)
	#	Main WWAN	Main Antenna	Aux Antenna		
Top Edge	1	Cellular	WLAN 5GHz	WLAN 5GHz	2.20	1.6
	2	Cellular	WLAN 5GHz	WLAN 5GHz+ BT	2.27	
	3	Cellular	WLAN 5GHz	BT	2.02	
	4	Cellular	WLAN 2.4GHz	WLAN 2.4GHz	1.71	
	5	Cellular	WLAN 2.4GHz	BT	1.58	
Back Face	1	Cellular	WLAN 5GHz	WLAN 5GHz	3.09	
	2	Cellular	WLAN 5GHz	WLAN 5GHz+ BT	3.24	
	3	Cellular	WLAN 5GHz	BT	2.71	
	4	Cellular	WLAN 2.4GHz	WLAN 2.4GHz	2.30	
	5	Cellular	WLAN 2.4GHz	BT	2.05	

In case the sum of SAR is larger than the limit, SAR test exclusion is determined by the SAR to peak location separation ratio. According to the last table possible simultaneous transmission combinations are identified for each position from 1 to 5, each combination will be analyzed by antenna pairs. Antenna pairs considered in one configuration won't be performed again in case they are repeated on the next simultaneous configuration:

Position	Ant. Pair case	Antenna	Reported SAR 1g (W/kg)	Σ SAR 1g (W/Kg)	Peak Location (mm) (x,y,z)	SAR to peak location separation ratio	Limit
Top Edge	1a	Main WWAN	1.19	1.96	(-3,100, -176.13)	0.02	0.04
		Main WLAN 5GHz	0.76		(3.5,-56, -177.3)		
	1b	Main WWAN	1.19	1.44	(-3,100, -176.13)	0.03	
		Aux WLAN 5GHz	0.24		(3.5,-64.5, -177.2)		
	2a	Main WWAN	1.19	1.26	(-3,100, -176.13)	0.02	
		BT	0.07		(-15.5,26.5, -177.2)		
	4a	Main WWAN	1.19	1.51	(-3,100, -176.13)	0.01	
		Main WLAN 2.4GHz	0.32		(4,-63, -177.2)		
	4b	Main WWAN	1.19	1.39	(-3,100, -176.13)	0.02	
		Aux WLAN 2.4GHz	0.19		(-15.5,25.5, -177.3)		
Back Face	1a	Main WWAN	1.40	2.57	(1,-141, -176.35)	0.02	
		Main WLAN 5GHz	1.17		(1,25, -177.2)		
	1b	Main WWAN	1.40	1.92	(1,-141, -176.35)	0.02	
		Aux WLAN 5GHz	0.52		(3.5,-64.5, -177.2)		
	2a	Main WWAN	1.40	0.14	(1,-141, -176.35)	0.02	
		BT	0.14		(1.5,-51, -177.2)		
	4a	Main WWAN	1.40	1.90	(1,-141, -176.35)	0.01	
		Main WLAN 2.4GHz	0.50		(3.5,39, -177.2)		
	4b	Main WWAN	1.40	1.80	(1,-141, -176.35)	0.03	
		Aux WLAN 2.4GHz	0.40		(2.5,-48, -177.2)		

1c WLAN Main + WLAN Aux and 3b WLAN Main + BT are already considered in: [3] 201124-01.TR01 - HP HSN-C11C SAR WLAN wAX201D2W

Considering the results described above and according to the simultaneous transmission evaluation exclusions described in FCC OET KDB 447498 D01, no enlarged zoom scan measurements are required.

Annex C. Test System Plots

1. WCDMA FDD II, 12.2kbps RMC, CH9262, Tablet Mode – Top Edge 66
2. WCDMA FDD IV, 12.2kbps RMC, CH1413, Tablet Mode – Back Face 67
3. WCDMA FDD V, 12.2kbps RMC, CH4132, Tablet Mode – Right Edge 68
4. LTE Band 2, QPSK - 20MHz, CH18700, Tablet Mode – Top Edge 69
5. LTE Band 7, QPSK - 20MHz, CH20850, Tablet Mode – Top Edge 70
6. LTE Band 12, QPSK - 10MHz, CH23095, Tablet Mode – Right Edge 71
7. LTE Band 13, QPSK - 10MHz, CH23230, Tablet Mode – Right Edge 72
8. LTE Band 26, QPSK - 15MHz, CH26865, Tablet Mode – Right Edge 73
9. LTE Band 30, QPSK - 10MHz, CH27710, Tablet Mode – Top Edge 74
10. LTE Band 38, QPSK - 20MHz, CH38150, Tablet Mode – Right Edge 75
11. LTE Band 41, QPSK - 20MHz, CH40620, Tablet Mode – Top Edge 76
12. LTE Band 66, QPSK - 20MHz, CH132572, Tablet Mode – Top Edge 77
13. System Check Body Liquid 750MHz – 2020-12-08 78
14. System Check Body Liquid 750MHz – 2020-12-09 79
15. System Check Body Liquid 835MHz – 2020-12-08 80
16. System Check Body Liquid 835MHz – 2020-12-10 81
17. System Check Body Liquid 1750MHz 82
18. System Check Body Liquid 1900MHz – 2020-12-08 83
19. System Check Body Liquid 1900MHz – 2020-12-10 84
20. System Check Body Liquid 2300MHz 85
21. System Check Body Liquid 2600MHz 86

1. WCDMA FDD II, 12.2kbps RMC, CH9262, Tablet Mode – Top Edge

Device under Test Properties

Name, Manufacturer	Dimensions [mm]	S/N	DUT Type
HSN-C11C	210.0 x 285.0 x 10.0	HSN-C11C (3)	Tablet

Exposure Conditions

Phantom Section, TSL	Position, Test Distance [mm]	Band	Group, UID	Frequency [MHz], Channel Number	Conversion Factor	TSL Conductivity [S/m]	TSL Permittivity
Flat, MSL	EDGE TOP, 0.00	Band 2, UTRA/FDD	WCDMA, 10011-CAB	1852.4, 9262	7.89	1.52	50.6

Hardware Setup

Phantom	TSL, Measured Date	Probe, Calibration Date	DAE, Calibration Date
ELI V8.0 (20deg probe tilt) - 2048	MBBL-600-6000, 2020-Dec-10	EX3DV4 - SN3978, 2020-05-22	DAE4 Sn1429, 2020-05-14

Scan Setup

	Area Scan	Zoom Scan
Grid Extents [mm]	90.0 x 120.0	30.0 x 30.0 x 30.0
Grid Steps [mm]	15.0 x 15.0	5.4 x 5.4 x 1.5
Sensor Surface [mm]	3.0	1.4
Graded Grid	No	Yes
Grading Ratio	n/a	1.5
MAIA	Confirmed by MAIA	Confirmed by MAIA
Surface Detection	Yes	Yes
Scan Method	Measured	Measured

Measurement Results

	Area Scan	Zoom Scan
Date	2020-12-10, 11:57	2020-12-10, 12:04
SAR1g [W/Kg]	0.925	1.05
SAR10g [W/Kg]	0.442	0.462
Power Drift [dB]	-0.03	-0.03
Power Scaling	Disabled	Disabled
Scaling Factor [dB]		
TSL Correction	Positive Only	Positive Only

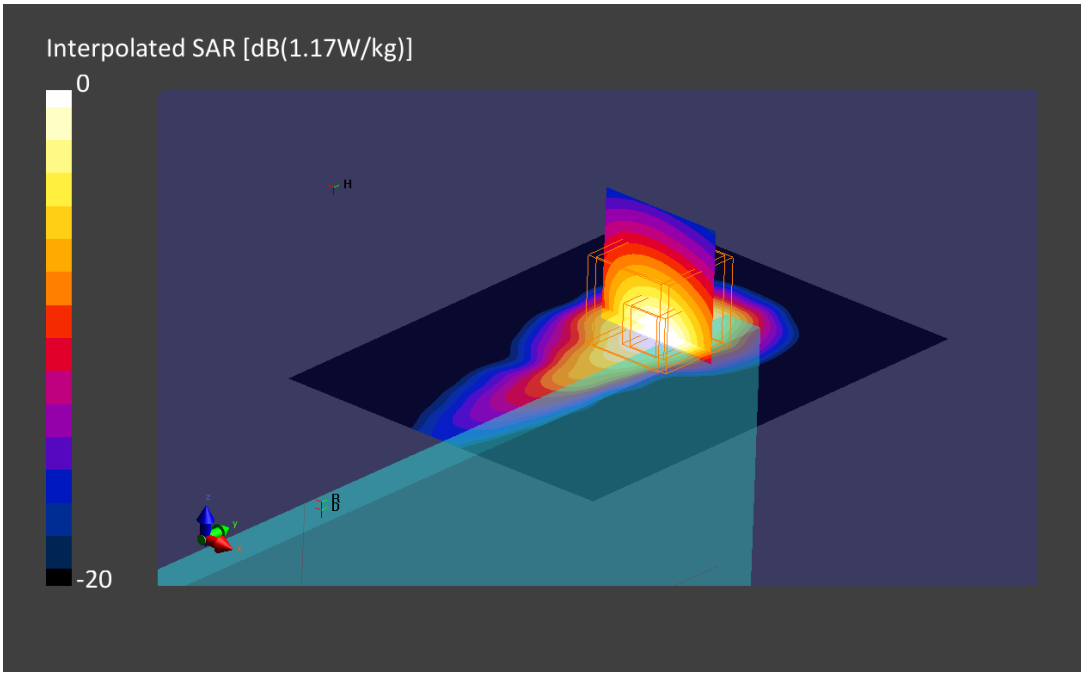

2. WCDMA FDD IV, 12.2kbps RMC, CH1413, Tablet Mode – Back Face

Device under Test Properties

Name, Manufacturer	Dimensions [mm]	S/N	DUT Type
HSN-C11C	210.0 x 285.0 x 10.0	HSN-C11C (3)	Tablet

Exposure Conditions

Phantom Section, TSL	Position, Test Distance [mm]	Band	Group, UID	Frequency [MHz], Channel Number	Conversion Factor	TSL Conductivity [S/m]	TSL Permittivity
Flat, MSL	BACK, 0.00	Band 4, UTRA/FDD	WCDMA, 10011-CAB	1732.5, 1762	8.14	1.42	51.9

Hardware Setup

Phantom	TSL, Measured Date	Probe, Calibration Date	DAE, Calibration Date
ELI V8.0 (20deg probe tilt) - 2048	MBBL-600-6000, 2020-Dec-08	EX3DV4 - SN3978, 2020-05-22	DAE4 Sn1429, 2020-05-14

Scan Setup

	Area Scan	Zoom Scan
Grid Extents [mm]	120.0 x 90.0	30.0 x 30.0 x 30.0
Grid Steps [mm]	15.0 x 15.0	3.1 x 3.1 x 1.2
Sensor Surface [mm]	3.0	1.4
Graded Grid	No	Yes
Grading Ratio	n/a	1.2
MAIA	Confirmed by MAIA	Confirmed by MAIA
Surface Detection	Yes	Yes
Scan Method	Measured	Measured

Measurement Results

	Area Scan	Zoom Scan
Date	2020-12-08, 11:08	2020-12-08, 11:30
SAR1g [W/Kg]	0.535	0.649
SAR10g [W/Kg]	0.279	0.272
Power Drift [dB]	0.02	0.03
Power Scaling	Disabled	Disabled
Scaling Factor [dB]		
TSL Correction	Positive Only	Positive Only

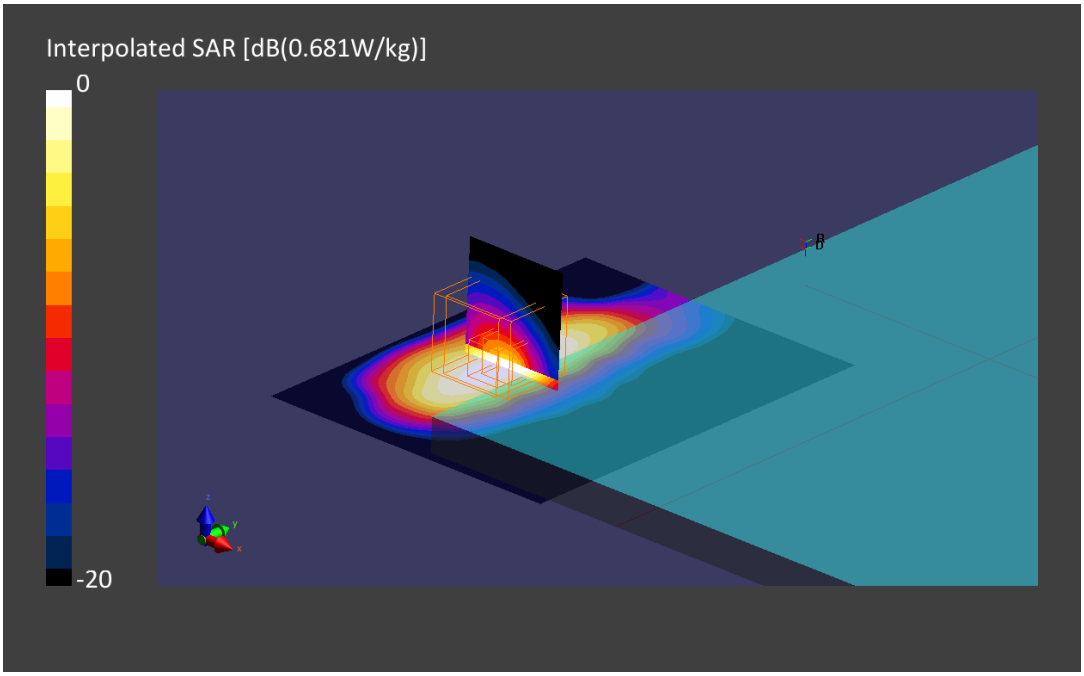

3. WCDMA FDD V, 12.2kbps RMC, CH4132, Tablet Mode – Right Edge

Device under Test Properties

Name, Manufacturer	Dimensions [mm]	S/N	DUT Type
HSN-C11C	210.0 x 285.0 x 10.0	HSN-C11C (3)	Tablet

Exposure Conditions

Phantom Section, TSL	Position, Test Distance [mm]	Band	Group, UID	Frequency [MHz], Channel Number	Conversion Factor	TSL Conductivity [S/m]	TSL Permittivity
Flat, MSL	EDGE RIGHT, 0.00	Band 5, UTRA/FDD	WCDMA, 10011-CAB	826.4, 4132	9.42	0.92	53.5

Hardware Setup

Phantom	TSL, Measured Date	Probe, Calibration Date	DAE, Calibration Date
ELI V8.0 (20deg probe tilt) - 2048	MBBL-600-6000, 2020-Dec-08	EX3DV4 - SN3978, 2020-05-22	DAE4 Sn1429, 2020-05-14

Scan Setup

	Area Scan	Zoom Scan
Grid Extents [mm]	90.0 x 90.0	30.0 x 30.0 x 30.0
Grid Steps [mm]	15.0 x 15.0	4.0 x 4.0 x 1.4
Sensor Surface [mm]	3.0	1.4
Graded Grid	No	Yes
Grading Ratio	n/a	1.4
MAIA	Confirmed by MAIA	Confirmed by MAIA
Surface Detection	Yes	Yes
Scan Method	Measured	Measured

Measurement Results

	Area Scan	Zoom Scan
Date	2020-12-08, 18:52	2020-12-08, 19:05
SAR1g [W/Kg]	1.00	1.10
SAR10g [W/Kg]	0.505	0.390
Power Drift [dB]	-0.01	-0.02
Power Scaling	Disabled	Disabled
Scaling Factor [dB]		
TSL Correction	Positive Only	Positive Only

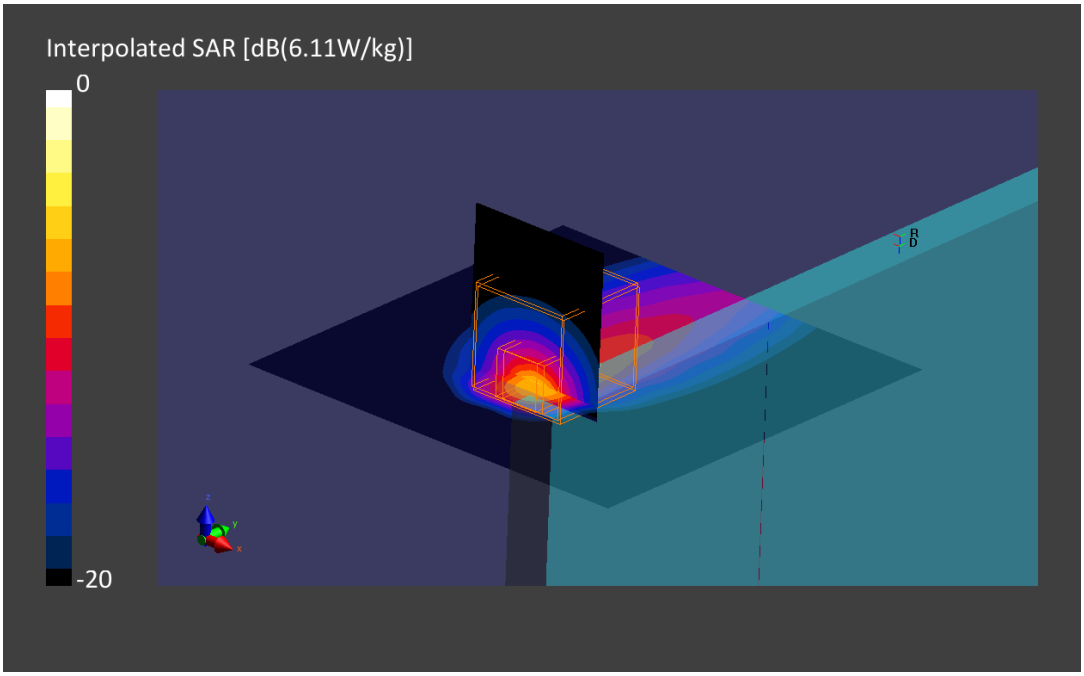

4. LTE Band 2, QPSK - 20MHz, CH18700, Tablet Mode – Top Edge

Device under Test Properties

Name, Manufacturer	Dimensions [mm]	S/N	DUT Type
HSN-C11C	210.0 x 285.0 x 10.0	HSN-C11C (3)	Tablet

Exposure Conditions

Phantom Section, TSL	Position, Test Distance [mm]	Band	Group, UID	Frequency [MHz], Channel Number	Conversion Factor	TSL Conductivity [S/m]	TSL Permittivity
Flat, MSL	EDGE TOP, 0.00	Band 2, E-UTRA/FDD	LTE-FDD, 10297-AAD	1860.0, 18700	7.89	1.51	51.7

Hardware Setup

Phantom	TSL, Measured Date	Probe, Calibration Date	DAE, Calibration Date
ELI V8.0 (20deg probe tilt) - 2048	MBBL-600-6000, 2020-Dec-08	EX3DV4 - SN3978, 2020-05-22	DAE4 Sn1429, 2020-05-14

Scan Setup

	Area Scan	Zoom Scan
Grid Extents [mm]	90.0 x 120.0	30.0 x 30.0 x 30.0
Grid Steps [mm]	15.0 x 15.0	5.4 x 5.4 x 1.5
Sensor Surface [mm]	3.0	1.4
Graded Grid	No	Yes
Grading Ratio	n/a	1.5
MAIA	Confirmed by MAIA	Confirmed by MAIA
Surface Detection	Yes	Yes
Scan Method	Measured	Measured

Measurement Results

	Area Scan	Zoom Scan
Date	2020-12-08, 23:49	2020-12-08, 23:56
SAR 1g [W/Kg]	0.862	0.975
SAR 10g [W/Kg]	0.411	0.432
Power Drift [dB]	-0.03	0.01
Power Scaling	Disabled	Disabled
Scaling Factor [dB]		
TSL Correction	Positive Only	Positive Only

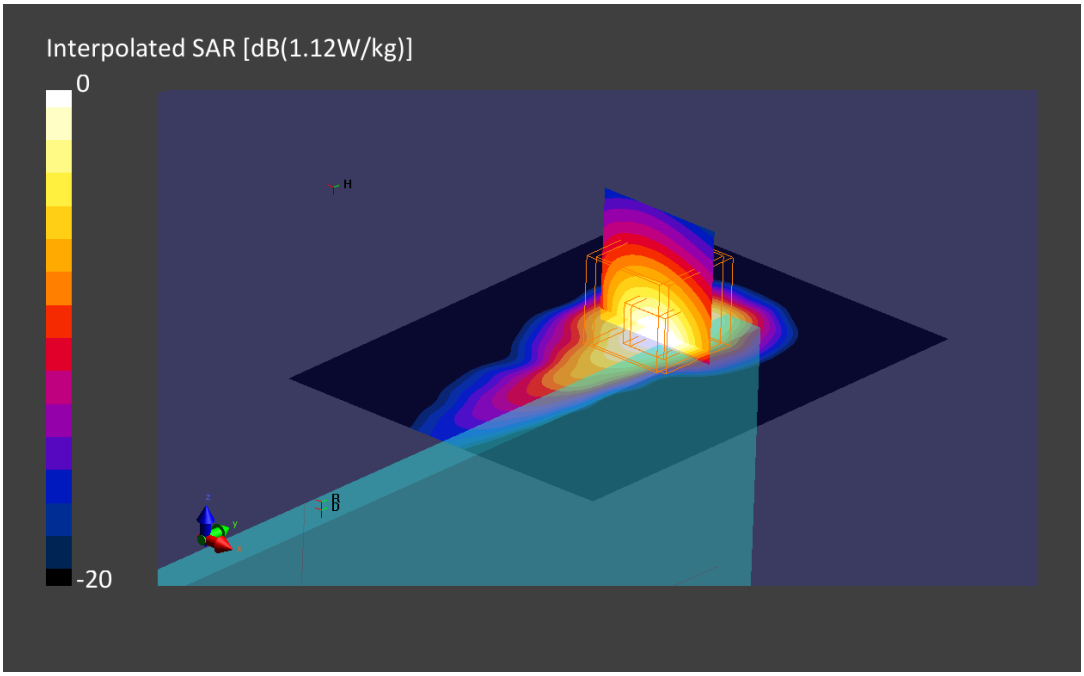

5. LTE Band 7, QPSK - 20MHz, CH20850, Tablet Mode – Top Edge

Device under Test Properties

Name, Manufacturer	Dimensions [mm]	S/N	DUT Type
HSN-C11C	210.0 x 285.0 x 10.0	HSN-C11C (3)	Tablet

Exposure Conditions

Phantom Section, TSL	Position, Test Distance [mm]	Band	Group, UID	Frequency [MHz], Channel Number	Conversion Factor	TSL Conductivity [S/m]	TSL Permittivity
Flat, MSL	EDGE TOP, 0.00	Band 7, E-UTRA/FDD	LTE-FDD, 10297-AAD	2510.0, 20850	7.19	2.08	49.7

Hardware Setup

Phantom	TSL, Measured Date	Probe, Calibration Date	DAE, Calibration Date
ELI V8.0 (20deg probe tilt) - 2048	MBBL-600-6000, 2020-Dec-10	EX3DV4 - SN3978, 2020-05-22	DAE4 Sn1429, 2020-05-14

Scan Setup

	Area Scan	Zoom Scan
Grid Extents [mm]	80.0 x 100.0	30.0 x 30.0 x 30.0
Grid Steps [mm]	10.0 x 10.0	5.0 x 5.0 x 1.5
Sensor Surface [mm]	3.0	1.4
Graded Grid	No	Yes
Grading Ratio	n/a	1.5
MAIA	Confirmed by MAIA	Confirmed by MAIA
Surface Detection	Yes	Yes
Scan Method	Measured	Measured

Measurement Results

	Area Scan	Zoom Scan
Date	2020-12-10, 00:49	2020-12-10, 00:56
SAR1g [W/Kg]	0.951	1.02
SAR10g [W/Kg]	0.418	0.423
Power Drift [dB]	0.01	0.00
Power Scaling	Disabled	Disabled
Scaling Factor [dB]		
TSL Correction	Positive Only	Positive Only

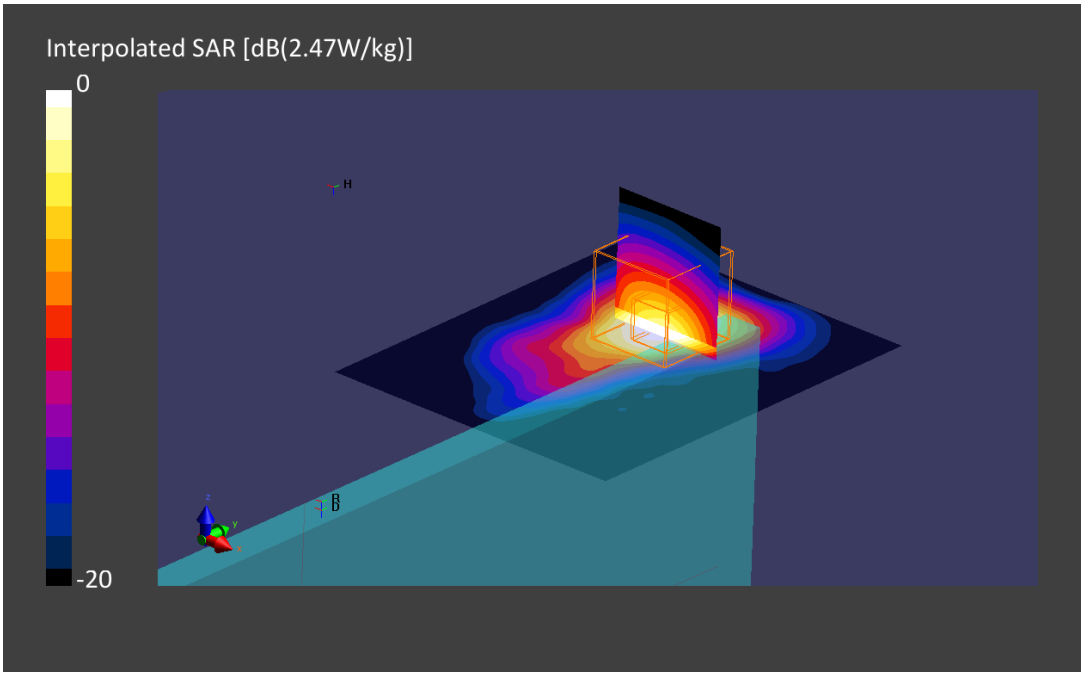

6. LTE Band 12, QPSK - 10MHz, CH23095, Tablet Mode – Right Edge

Device under Test Properties

Name, Manufacturer	Dimensions [mm]	S/N	DUT Type
HSN-C11C	210.0 x 285.0 x 10.0	HSN-C11C (3)	Tablet

Exposure Conditions

Phantom Section, TSL	Position, Test Distance [mm]	Band	Group, UID	Frequency [MHz], Channel Number	Conversion Factor	TSL Conductivity [S/m]	TSL Permittivity
Flat, MSL	EDGE RIGHT, 0.00	Band 12, E-UTRA/FDD	LTE-FDD, 10175-CAG	707.5, 23095	9.59	0.87	53.8

Hardware Setup

Phantom	TSL, Measured Date	Probe, Calibration Date	DAE, Calibration Date
ELI V8.0 (20deg probe tilt) - 2048	MBBL-600-6000, 2020-Dec-08	EX3DV4 - SN3978, 2020-05-22	DAE4 Sn1429, 2020-05-14

Scan Setup

	Area Scan	Zoom Scan
Grid Extents [mm]	90.0 x 90.0	30.0 x 30.0 x 30.0
Grid Steps [mm]	15.0 x 15.0	4.0 x 4.0 x 1.4
Sensor Surface [mm]	3.0	1.4
Graded Grid	No	Yes
Grading Ratio	n/a	1.4
MAIA	Confirmed by MAIA	Confirmed by MAIA
Surface Detection	Yes	Yes
Scan Method	Measured	Measured

Measurement Results

	Area Scan	Zoom Scan
Date	2020-12-08, 20:06	2020-12-08, 20:18
SAR1g [W/Kg]	1.10	1.27
SAR10g [W/Kg]	0.518	0.399
Power Drift [dB]	0.01	0.02
Power Scaling	Disabled	Disabled
Scaling Factor [dB]		
TSL Correction	Positive Only	Positive Only

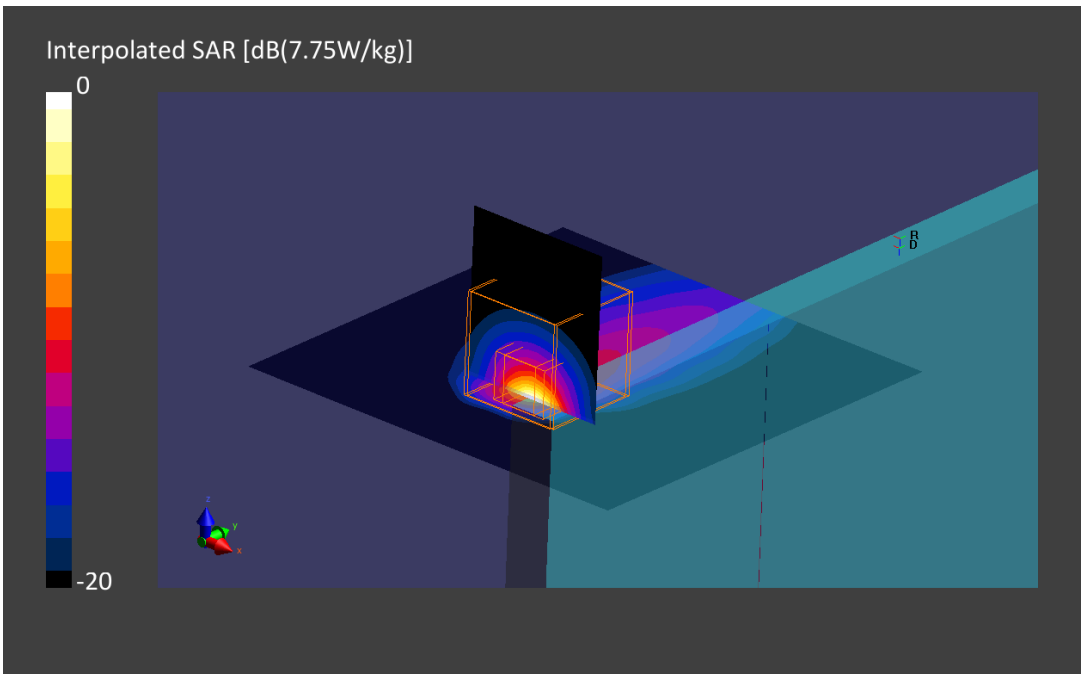

7. LTE Band 13, QPSK - 10MHz, CH23230, Tablet Mode – Right Edge

Device under Test Properties

Name, Manufacturer	Dimensions [mm]	S/N	DUT Type
HSN-C11C	210.0 x 285.0 x 10.0	HSN-C11C (3)	Tablet

Exposure Conditions

Phantom Section, TSL	Position, Test Distance [mm]	Band	Group, UID	Frequency [MHz], Channel Number	Conversion Factor	TSL Conductivity [S/m]	TSL Permittivity
Flat, MSL	EDGE RIGHT, 0.00	Band 13, E-UTRA/FDD	LTE-FDD, 10108-CAG	782.0, 23230	9.59	0.90	53.6

Hardware Setup

Phantom	TSL, Measured Date	Probe, Calibration Date	DAE, Calibration Date
ELI V8.0 (20deg probe tilt) - 2048	MBBL-600-6000, 2020-Dec-08	EX3DV4 - SN3978, 2020-05-22	DAE4 Sn1429, 2020-05-14

Scan Setup

	Area Scan	Zoom Scan
Grid Extents [mm]	90.0 x 90.0	30.0 x 30.0 x 30.0
Grid Steps [mm]	15.0 x 15.0	3.4 x 3.4 x 1.2
Sensor Surface [mm]	3.0	1.4
Graded Grid	No	Yes
Grading Ratio	n/a	1.2
MAIA	Confirmed by MAIA	Confirmed by MAIA
Surface Detection	Yes	Yes
Scan Method	Measured	Measured

Measurement Results

	Area Scan	Zoom Scan
Date	2020-12-09, 18:03	2020-12-09, 18:21
SAR1g [W/Kg]	0.748	1.35
SAR10g [W/Kg]	0.431	0.450
Power Drift [dB]	-0.01	-0.05
Power Scaling	Disabled	Disabled
Scaling Factor [dB]		
TSL Correction	Positive Only	Positive Only

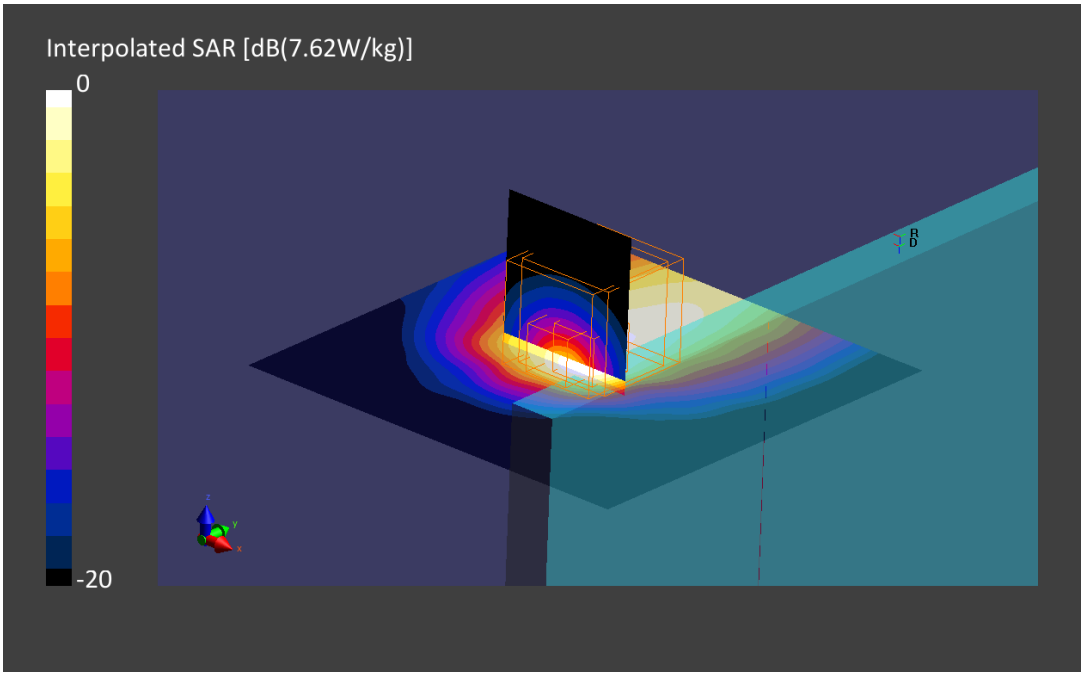

8. LTE Band 26, QPSK - 15MHz, CH26865, Tablet Mode – Right Edge

Device under Test Properties

Name, Manufacturer	Dimensions [mm]	S/N	DUT Type
HSN-C11C	210.0 x 285.0 x 10.0	HSN-C11C (3)	Tablet

Exposure Conditions

Phantom Section, TSL	Position, Test Distance [mm]	Band	Group, UID	Frequency [MHz], Channel Number	Conversion Factor	TSL Conductivity [S/m]	TSL Permittivity
Flat, MSL	EDGE RIGHT, 0.00	Band 26 E-UTRA/FDD	LTE-FDD, 10160-CAE	841.5, 26965	9.42	0.96	52.4

Hardware Setup

Phantom	TSL, Measured Date	Probe, Calibration Date	DAE, Calibration Date
ELI V8.0 (20deg probe tilt) - 2048	MBBL-600-6000, 2020-Dec-10	EX3DV4 - SN3978, 2020-05-22	DAE4 Sn1429, 2020-05-14

Scan Setup

	Area Scan	Zoom Scan
Grid Extents [mm]	90.0 x 90.0	30.0 x 30.0 x 30.0
Grid Steps [mm]	15.0 x 15.0	4.5 x 4.5 x 1.4
Sensor Surface [mm]	3.0	1.4
Graded Grid	No	Yes
Grading Ratio	n/a	1.4
MAIA	Confirmed by MAIA	Confirmed by MAIA
Surface Detection	Yes	Yes
Scan Method	Measured	Measured

Measurement Results

	Area Scan	Zoom Scan
Date	2020-12-10, 18:35	2020-12-10, 18:45
SAR 1g [W/Kg]	1.23	1.31
SAR 10g [W/Kg]	0.627	0.493
Power Drift [dB]	-0.01	-0.02
Power Scaling	Disabled	Disabled
Scaling Factor [dB]		
TSL Correction	Positive Only	Positive Only

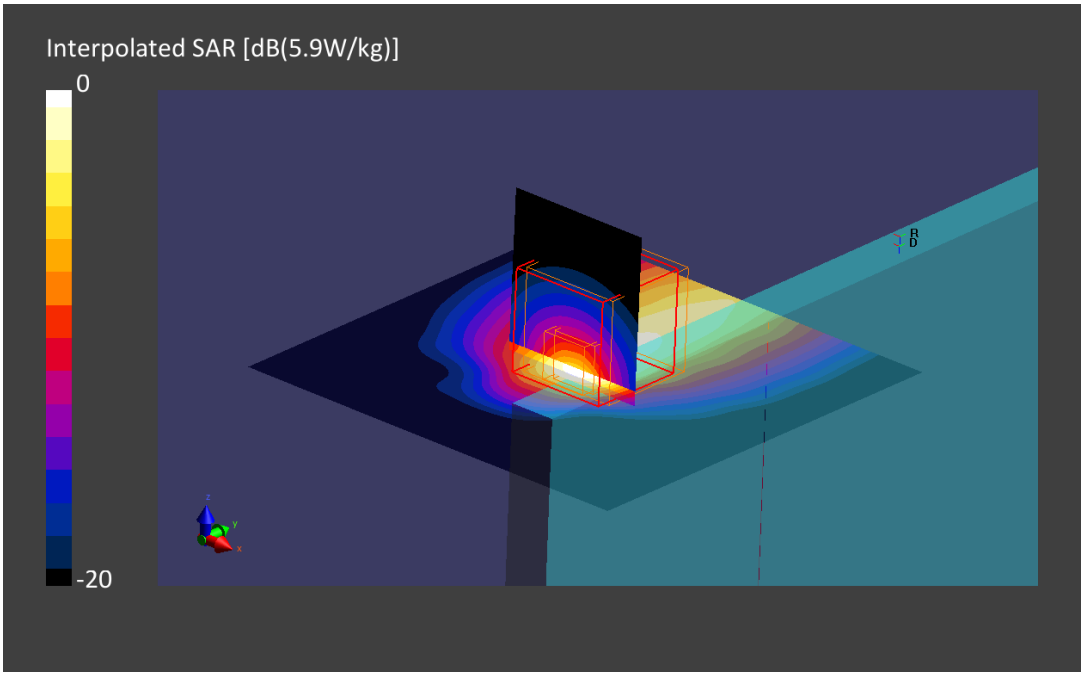

9. LTE Band 30, QPSK - 10MHz, CH27710, Tablet Mode – Top Edge

Device under Test Properties

Name, Manufacturer	Dimensions [mm]	S/N	DUT Type
HSN-C11C	210.0 x 285.0 x 10.0	HSN-C11C (3)	Tablet

Exposure Conditions

Phantom Section, TSL	Position, Test Distance [mm]	Band	Group, UID	Frequency [MHz], Channel Number	Conversion Factor	TSL Conductivity [S/m]	TSL Permittivity
Flat, MSL	EDGE TOP, 0.00	Band 30, E-UTRA/FDD	LTE-FDD, 10175-CAG	2310.0, 27710	7.45	1.89	50.0

Hardware Setup

Phantom	TSL, Measured Date	Probe, Calibration Date	DAE, Calibration Date
ELI V8.0 (20deg probe tilt) - 2048	MBBL-600-6000, 2020-Dec-10	EX3DV4 - SN3978, 2020-05-22	DAE4 Sn1429, 2020-05-14

Scan Setup

	Area Scan	Zoom Scan
Grid Extents [mm]	80.0 x 100.0	30.0 x 30.0 x 30.0
Grid Steps [mm]	10.0 x 10.0	5.0 x 5.0 x 1.5
Sensor Surface [mm]	3.0	1.4
Graded Grid	No	Yes
Grading Ratio	n/a	1.5
MAIA	Confirmed by MAIA	Confirmed by MAIA
Surface Detection	Yes	Yes
Scan Method	Measured	Measured

Measurement Results

	Area Scan	Zoom Scan
Date	2020-12-10, 01:29	2020-12-10, 01:36
SAR 1g [W/Kg]	1.01	1.07
SAR 10g [W/Kg]	0.457	0.454
Power Drift [dB]	0.01	-0.01
Power Scaling	Disabled	Disabled
Scaling Factor [dB]		
TSL Correction	Positive Only	Positive Only

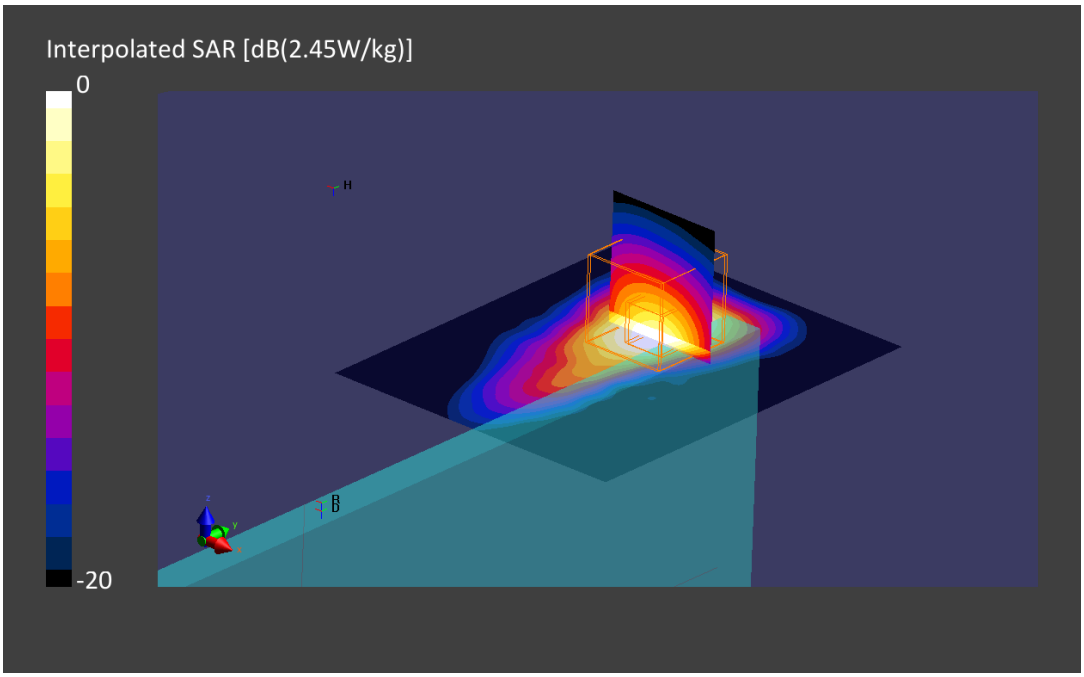

10. LTE Band 38, QPSK - 20MHz, CH38150, Tablet Mode – Right Edge

Device under Test Properties

Name, Manufacturer	Dimensions [mm]	S/N	DUT Type
HSN-C11C	210.0 x 285.0 x 10.0	HSN-C11C (3)	Tablet

Exposure Conditions

Phantom Section, TSL	Position, Test Distance [mm]	Band	Group, UID	Frequency [MHz], Channel Number	Conversion Factor	TSL Conductivity [S/m]	TSL Permittivity
Flat, MSL	EDGE RIGHT, 0.00	Band 38, E-UTRA/TDD	LTE-TDD, 10435-AAF	2610.0, 38150	7.19	2.18	49.5

Hardware Setup

Phantom	TSL, Measured Date	Probe, Calibration Date	DAE, Calibration Date
ELI V8.0 (20deg probe tilt) - 2048	MBBL-600-6000, 2020-Dec-10	EX3DV4 - SN3978, 2020-05-22	DAE4 Sn1429, 2020-05-14

Scan Setup

	Area Scan	Zoom Scan
Grid Extents [mm]	80.0 x 80.0	30.0 x 30.0 x 30.0
Grid Steps [mm]	10.0 x 10.0	4.5 x 4.5 x 1.5
Sensor Surface [mm]	3.0	1.4
Graded Grid	No	Yes
Grading Ratio	n/a	1.5
MAIA	Confirmed by MAIA	Confirmed by MAIA
Surface Detection	Yes	Yes
Scan Method	Measured	Measured

Measurement Results

	Area Scan	Zoom Scan
Date	2020-12-10, 20:48	2020-12-10, 20:56
SAR1g [W/Kg]	0.838	0.876
SAR10g [W/Kg]	0.332	0.326
Power Drift [dB]	-0.00	-0.01
Power Scaling	Disabled	Disabled
Scaling Factor [dB]		
TSL Correction	Positive Only	Positive Only

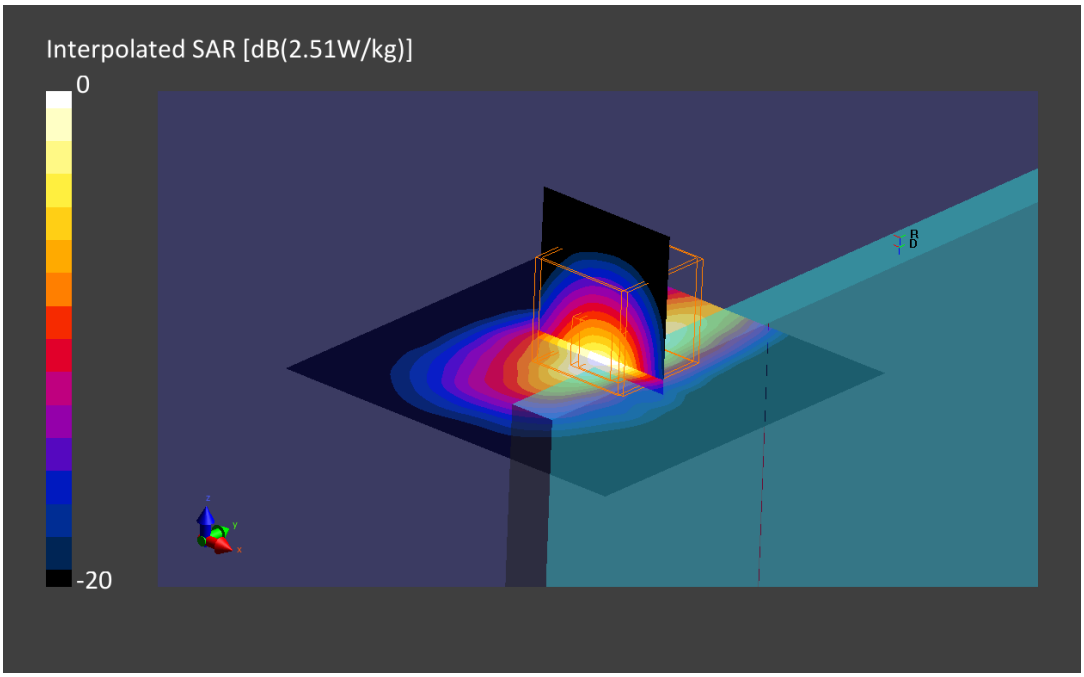

11. LTE Band 41, QPSK - 20MHz, CH40620, Tablet Mode – Top Edge

Device under Test Properties

Name, Manufacturer	Dimensions [mm]	S/N	DUT Type
HSN-C11C	210.0 x 285.0 x 10.0	HSN-C11C (3)	Tablet

Exposure Conditions

Phantom Section, TSL	Position, Test Distance [mm]	Band	Group, UID	Frequency [MHz], Channel Number	Conversion Factor	TSL Conductivity [S/m]	TSL Permittivity
Flat, MSL	EDGE TOP, 0.00	Band 41, E-UTRA/TDD	LTE-TDD, 10494-AAF	2593.0, 40620	7.19	2.14	50.6

Hardware Setup

Phantom	TSL, Measured Date	Probe, Calibration Date	DAE, Calibration Date
ELI V8.0 (20deg probe tilt) - 2048	MBBL-600-6000, 2020-Dec-10	EX3DV4 - SN3978, 2020-05-22	DAE4 Sn1429, 2020-05-14

Scan Setup

	Area Scan	Zoom Scan
Grid Extents [mm]	80.0 x 100.0	30.0 x 30.0 x 30.0
Grid Steps [mm]	10.0 x 10.0	5.0 x 5.0 x 1.5
Sensor Surface [mm]	3.0	1.4
Graded Grid	No	Yes
Grading Ratio	n/a	1.5
MAIA	Confirmed by MAIA	Confirmed by MAIA
Surface Detection	Yes	Yes
Scan Method	Measured	Measured

Measurement Results

	Area Scan	Zoom Scan
Date	2020-12-10, 09:17	2020-12-10, 09:24
SAR1g [W/Kg]	0.481	0.529
SAR10g [W/Kg]	0.210	0.215
Power Drift [dB]	0.00	0.02
Power Scaling	Disabled	Disabled
Scaling Factor [dB]		
TSL Correction	Positive Only	Positive Only

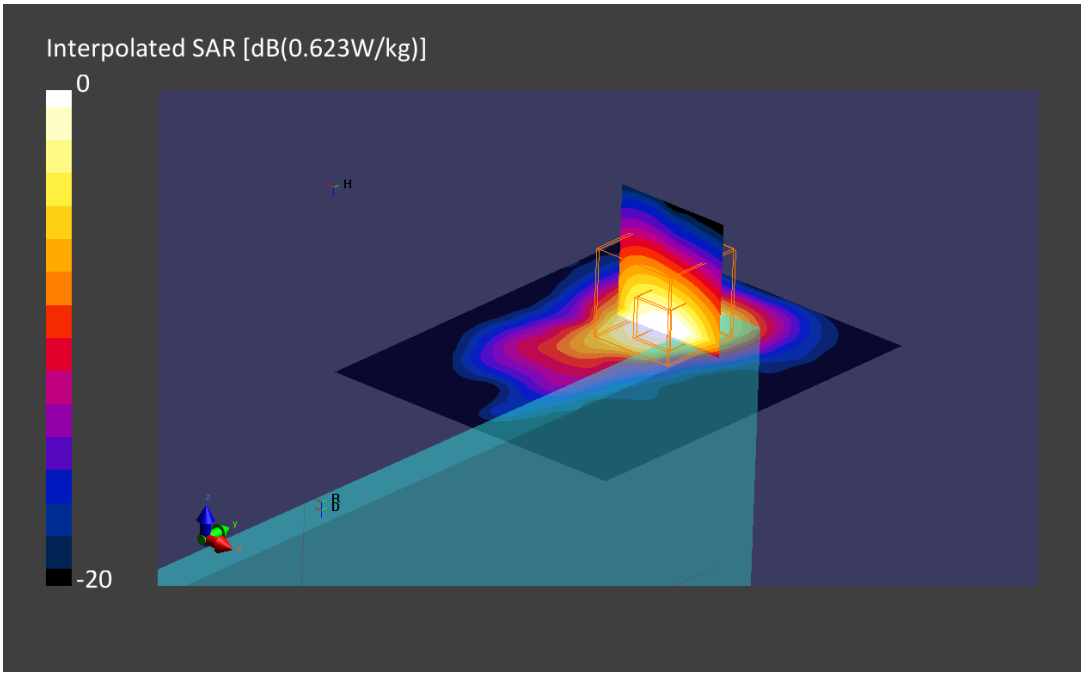

12. LTE Band 66, QPSK - 20MHz, CH132572, Tablet Mode – Top Edge

Device under Test Properties

Name, Manufacturer	Dimensions [mm]	S/N	DUT Type
HSN-C11C	210.0 x 285.0 x 10.0	HSN-C11C (3)	Tablet

Exposure Conditions

Phantom Section, TSL	Position, Test Distance [mm]	Band	Group, UID	Frequency [MHz], Channel Number	Conversion Factor	TSL Conductivity [S/m]	TSL Permittivity
Flat, MSL	EDGE TOP, 0.00	Band 66, E-UTRA/FDD	LTE-FDD, 10297-AAD	1770.0, 132572	8.14	1.46	50.7

Hardware Setup

Phantom	TSL, Measured Date	Probe, Calibration Date	DAE, Calibration Date
ELI V8.0 (20deg probe tilt) - 2048	MBBL-600-6000, 2020-Dec-10	EX3DV4 - SN3978, 2020-05-22	DAE4 Sn1429, 2020-05-14

Scan Setup

	Area Scan	Zoom Scan
Grid Extents [mm]	90.0 x 120.0	30.0 x 30.0 x 30.0
Grid Steps [mm]	15.0 x 15.0	5.8 x 5.8 x 1.5
Sensor Surface [mm]	3.0	1.4
Graded Grid	No	Yes
Grading Ratio	n/a	1.5
MAIA	Confirmed by MAIA	Confirmed by MAIA
Surface Detection	Yes	Yes
Scan Method	Measured	Measured

Measurement Results

	Area Scan	Zoom Scan
Date	2020-12-10, 02:56	2020-12-10, 03:03
SAR1g [W/Kg]	0.758	0.833
SAR10g [W/Kg]	0.363	0.372
Power Drift [dB]	-0.07	0.01
Power Scaling	Disabled	Disabled
Scaling Factor [dB]		
TSL Correction	Positive Only	Positive Only

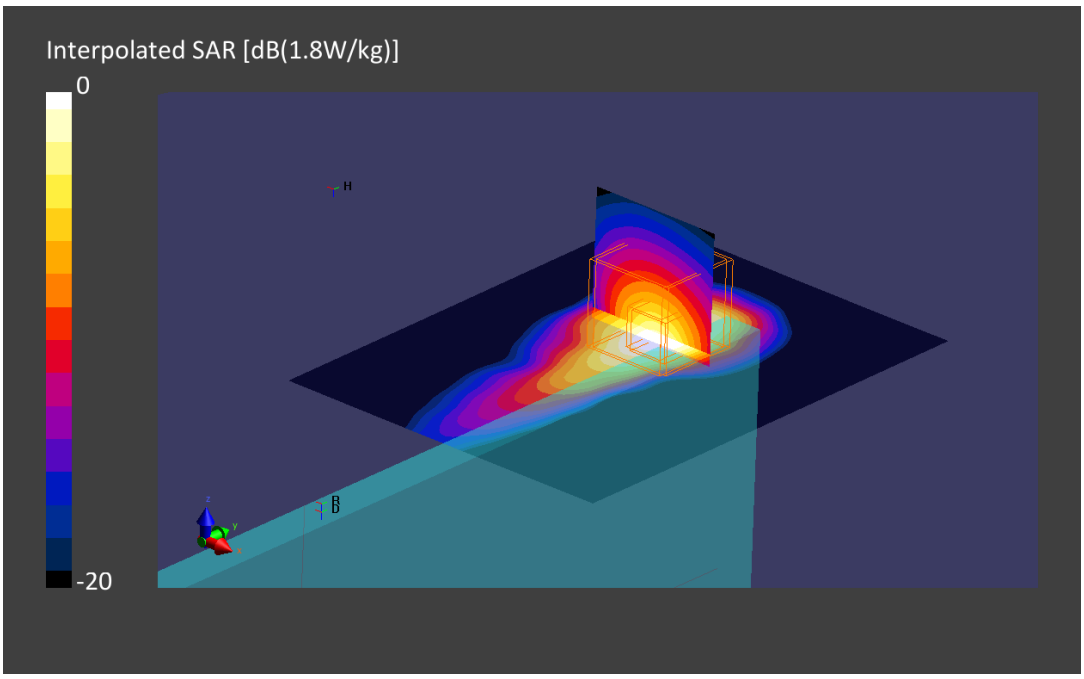

13. System Check Body Liquid 750MHz – 2020-12-08

Device under Test Properties

Name, Manufacturer	Dimensions [mm]	S/N	DUT Type
Dipole 750MHz, SPEAG	50.0 x 10.0 x 10.0	1136	Validation Dipole

Exposure Conditions

Phantom Section, TSL	Position, Test Distance [mm]	Band	Group, UID	Frequency [MHz], Channel Number	Conversion Factor	TSL Conductivity [S/m]	TSL Permittivity
Flat, MSL	,		, 0--	750.0, 0	9.59	0.89	53.7

Hardware Setup

Phantom	TSL, Measured Date	Probe, Calibration Date	DAE, Calibration Date
ELI V8.0 (20deg probe tilt) - 2048	MBBL-600-6000, 2020-Dec-08	EX3DV4 - SN3978, 2020-05-22	DAE4 Sn1429, 2020-05-14

Scan Setup

	Area Scan	Zoom Scan
Grid Extents [mm]	60.0 x 90.0	30.0 x 30.0 x 30.0
Grid Steps [mm]	15.0 x 15.0	6.0 x 6.0 x 1.5
Sensor Surface [mm]	3.0	1.4
Graded Grid	No	Yes
Grading Ratio	n/a	1.5
MAIA	Confirmed by MAIA	Confirmed by MAIA
Surface Detection	Yes	Yes
Scan Method	Measured	Measured

Measurement Results

	Area Scan	Zoom Scan
Date	2020-12-08, 08:41	2020-12-08, 08:46
SAR1g [W/Kg]	0.368	0.372
SAR10g [W/Kg]	0.247	0.248
Power Drift [dB]	-0.10	-0.04
Power Scaling	Disabled	Disabled
Scaling Factor [dB]		
TSL Correction	Positive Only	Positive Only

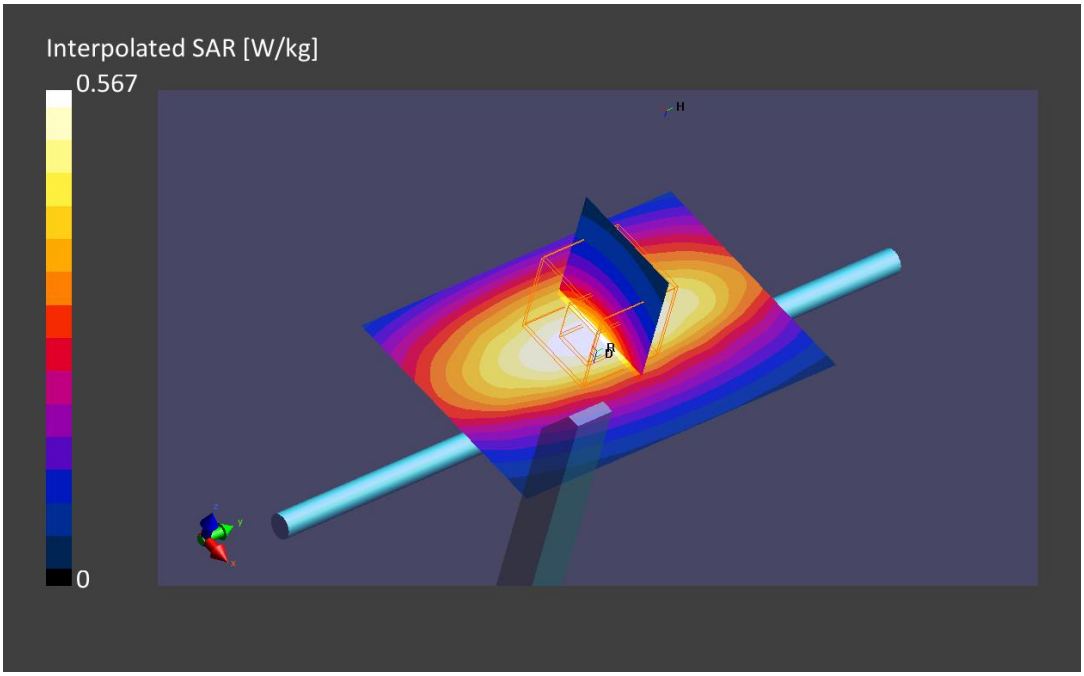

14. System Check Body Liquid 750MHz – 2020-12-09

Device under Test Properties

Name, Manufacturer	Dimensions [mm]	S/N	DUT Type
Dipole 750MHz, SPEAG	50.0 x 10.0 x 10.0	1136	Validation Dipole

Exposure Conditions

Phantom Section, TSL	Position, Test Distance [mm]	Band	Group, UID	Frequency [MHz], Channel Number	Conversion Factor	TSL Conductivity [S/m]	TSL Permittivity
Flat, MSL	,		, 0--	750.0, 0	9.59	0.89	53.7

Hardware Setup

Phantom	TSL, Measured Date	Probe, Calibration Date	DAE, Calibration Date
ELI V8.0 (20deg probe tilt) - 2048	MBBL-600-6000, 2020-Dec-08	EX3DV4 - SN3978, 2020-05-22	DAE4 Sn1429, 2020-05-14

Scan Setup

	Area Scan	Zoom Scan
Grid Extents [mm]	60.0 x 90.0	30.0 x 30.0 x 30.0
Grid Steps [mm]	15.0 x 15.0	6.0 x 6.0 x 1.5
Sensor Surface [mm]	3.0	1.4
Graded Grid	No	Yes
Grading Ratio	n/a	1.5
MAIA	Confirmed by MAIA	Confirmed by MAIA
Surface Detection	Yes	Yes
Scan Method	Measured	Measured

Measurement Results

	Area Scan	Zoom Scan
Date	2020-12-09, 14:11	2020-12-09, 14:16
SAR1g [W/Kg]	0.375	0.390
SAR10g [W/Kg]	0.255	0.257
Power Drift [dB]	0.00	0.00
Power Scaling	Disabled	Disabled
Scaling Factor [dB]		
TSL Correction	Positive Only	Positive Only

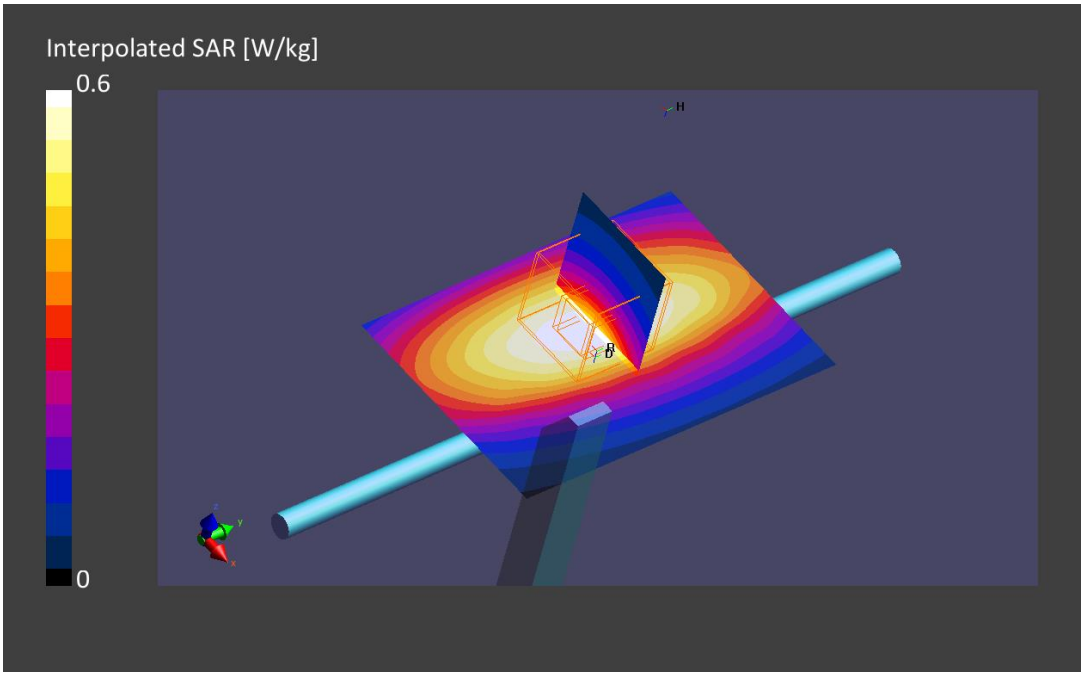

15. System Check Body Liquid 835MHz – 2020-12-08

Device under Test Properties

Name, Manufacturer	Dimensions [mm]	Serial Number	DUT Type
Dipole 835MHz, SPEAG	50.0 x 10.0 x 10.0	4d192	Validation Dipole

Exposure Conditions

Phantom Section, TSL	Position, Test Distance [mm]	Band	Group, UID	Frequency [MHz], Channel Number	Conversion Factor	TSL Conductivity [S/m]	TSL Permittivity
Flat, MSL				835.0, 0	9.42	0.92	53.5

Hardware Setup

Phantom	TSL, Measured Date	Probe, Calibration Date	DAE, Calibration Date
ELI V8.0 (20deg probe tilt) - 2048	MBBL-600-6000, 2020-Dec-08	EX3DV4 - SN3978, 2020-05-22	DAE4 Sn1429, 2020-05-14

Scan Setup

	Area Scan	Zoom Scan
Grid Extents [mm]	60.0 x 90.0	30.0 x 30.0 x 30.0
Grid Steps [mm]	15.0 x 15.0	6.0 x 6.0 x 1.5
Sensor Surface [mm]	3.0	1.4
Graded Grid	No	Yes
Grading Ratio	n/a	1.5
MAIA	Confirmed by MAIA	Confirmed by MAIA
Surface Detection	Yes	Yes
Scan Method	Measured	Measured

Measurement Results

	Area Scan	Zoom Scan
Date	2020-12-08, 09:02	2020-12-08, 09:06
SAR 1g [W/Kg]	0.432	0.438
SAR 10g [W/Kg]	0.283	0.287
Power Drift [dB]	0.02	-0.01
Power Scaling	Disabled	Disabled
Scaling Factor [dB]		
TSL Correction	Positive Only	Positive Only

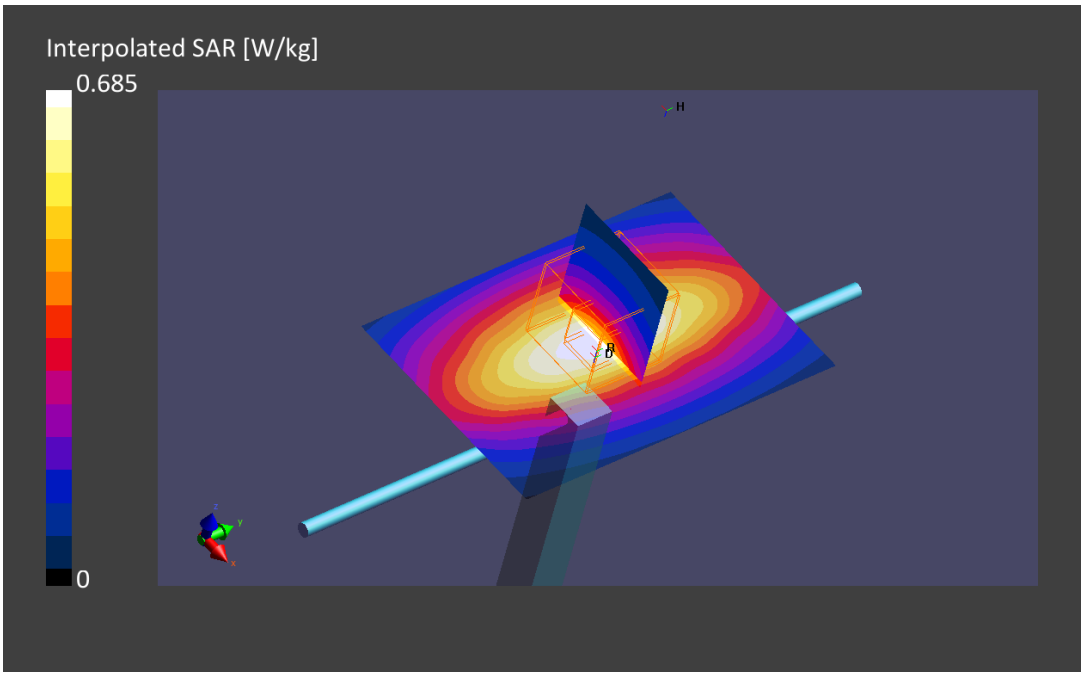

16. System Check Body Liquid 835MHz – 2020-12-10

Device under Test Properties

Name, Manufacturer	Dimensions [mm]	Serial Number	DUT Type
Dipole 835MHz, SPEAG	50.0 x 10.0 x 10.0	4d192	Validation Dipole

Exposure Conditions

Phantom Section, TSL	Position, Test Distance [mm]	Band	Group, UID	Frequency [MHz], Channel Number	Conversion Factor	TSL Conductivity [S/m]	TSL Permittivity
Flat, MSL				835.0, 0	9.42	0.96	52.4

Hardware Setup

Phantom	TSL, Measured Date	Probe, Calibration Date	DAE, Calibration Date
ELI V8.0 (20deg probe tilt) - 2048	MBBL-600-6000, 2020-Dec-10	EX3DV4 - SN3978, 2020-05-22	DAE4 Sn1429, 2020-05-14

Scan Setup

	Area Scan	Zoom Scan
Grid Extents [mm]	60.0 x 90.0	30.0 x 30.0 x 30.0
Grid Steps [mm]	15.0 x 15.0	6.0 x 6.0 x 1.5
Sensor Surface [mm]	3.0	1.4
Graded Grid	No	Yes
Grading Ratio	n/a	1.5
MAIA	Confirmed by MAIA	Confirmed by MAIA
Surface Detection	Yes	Yes
Scan Method	Measured	Measured

Measurement Results

	Area Scan	Zoom Scan
Date	2020-12-10, 14:15	2020-12-10, 14:20
SAR 1g [W/Kg]	0.446	0.455
SAR 10g [W/Kg]	0.294	0.299
Power Drift [dB]	0.01	0.01
Power Scaling	Disabled	Disabled
Scaling Factor [dB]		
TSL Correction	Positive Only	Positive Only

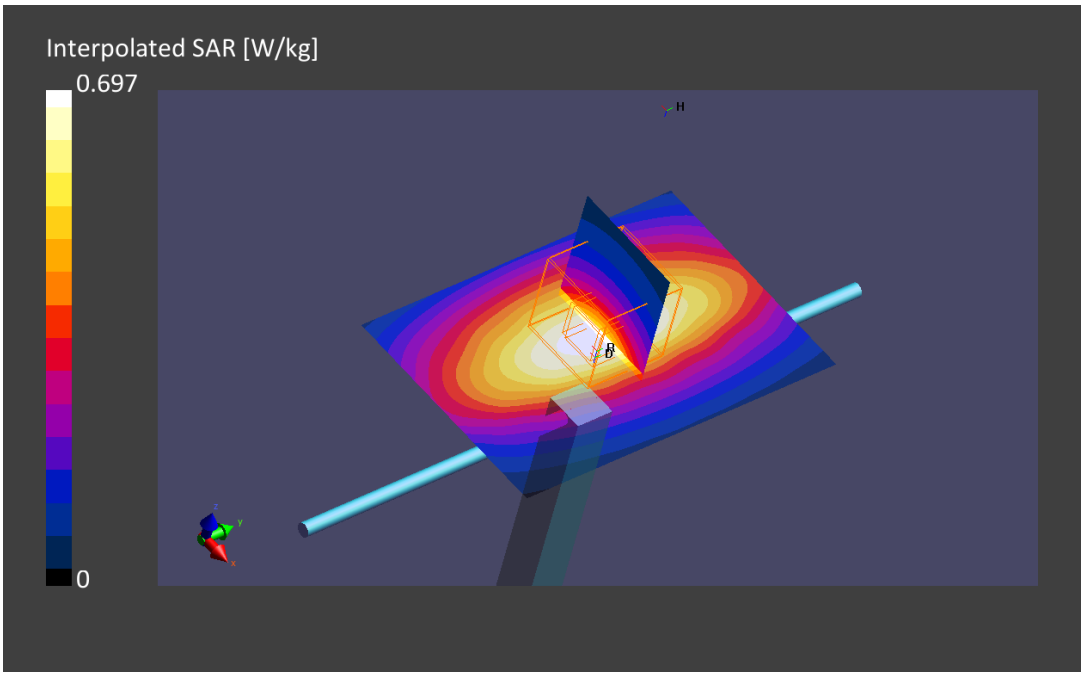

17. System Check Body Liquid 1750MHz

Device under Test Properties

Name, Manufacturer	Dimensions [mm]	S/N	DUT Type
Dipole 1750MHz, SPEAG	50.0 x 10.0 x 10.0	1133	Validation Dipole

Exposure Conditions

Phantom Section, TSL	Position, Test Distance [mm]	Band	Group, UID	Frequency [MHz], Channel Number	Conversion Factor	TSL Conductivity [S/m]	TSL Permittivity
Flat, MSL	,		, 0--	1750.0, 0	8.14	1.45	50.8

Hardware Setup

Phantom	TSL, Measured Date	Probe, Calibration Date	DAE, Calibration Date
ELI V8.0 (20deg probe tilt) - 2048	MBBL-600-6000, 2020-Dec-10	EX3DV4 - SN3978, 2020-05-22	DAE4 Sn1429, 2020-05-14

Scan Setup

	Area Scan	Zoom Scan
Grid Extents [mm]	60.0 x 90.0	30.0 x 30.0 x 30.0
Grid Steps [mm]	15.0 x 15.0	6.0 x 6.0 x 1.5
Sensor Surface [mm]	3.0	1.4
Graded Grid	No	Yes
Grading Ratio	n/a	1.5
MAIA	Confirmed by MAIA	Confirmed by MAIA
Surface Detection	Yes	Yes
Scan Method	Measured	Measured

Measurement Results

	Area Scan	Zoom Scan
Date	2020-12-10, 14:56	2020-12-10, 15:01
SAR1g [W/Kg]	1.71	1.77
SAR10g [W/Kg]	0.904	0.936
Power Drift [dB]	0.00	-0.01
Power Scaling	Disabled	Disabled
Scaling Factor [dB]		
TSL Correction	Positive Only	Positive Only

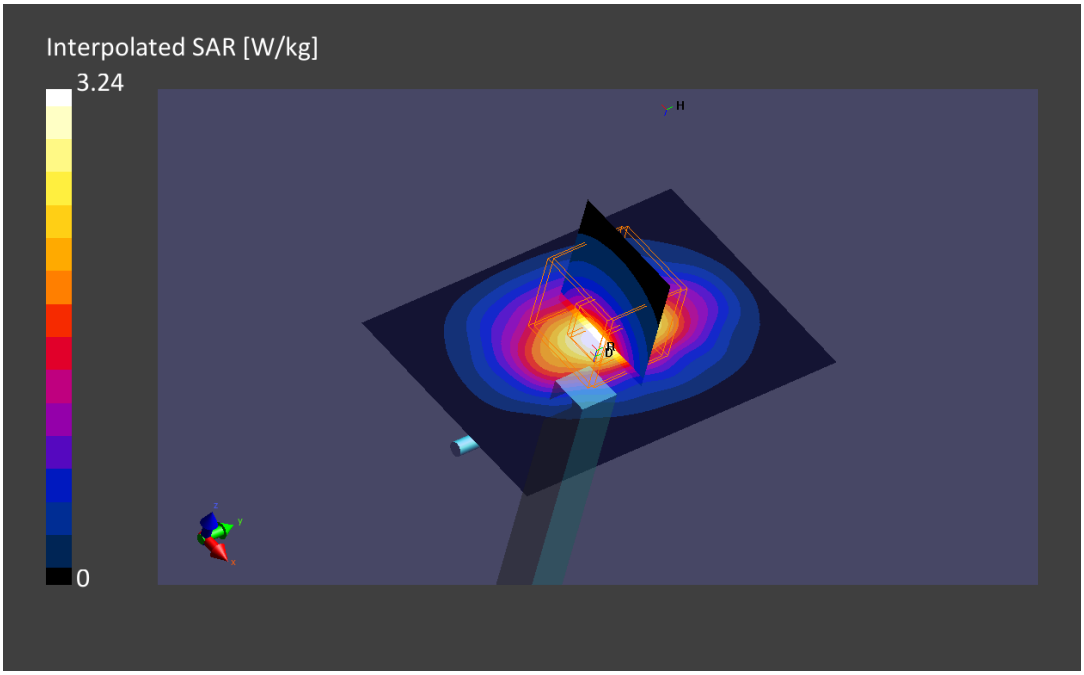

18. System Check Body Liquid 1900MHz – 2020-12-08

Device under Test Properties

Name, Manufacturer	Dimensions [mm]	S/N	DUT Type
Dipole 1900MHz, SPEAG	50.0 x 10.0 x 10.0	5d197	Validation Dipole

Exposure Conditions

Phantom Section, TSL	Position, Test Distance [mm]	Band	Group, UID	Frequency [MHz], Channel Number	Conversion Factor	TSL Conductivity [S/m]	TSL Permittivity
Flat, MSL	,		, 0--	1900.0, 0	7.89	1.54	51.7

Hardware Setup

Phantom	TSL, Measured Date	Probe, Calibration Date	DAE, Calibration Date
ELI V8.0 (20deg probe tilt) - 2048	MBBL-600-6000, 2020-Dec-08	EX3DV4 - SN3978, 2020-05-22	DAE4 Sn1429, 2020-05-14

Scan Setup

	Area Scan	Zoom Scan
Grid Extents [mm]	60.0 x 90.0	30.0 x 30.0 x 30.0
Grid Steps [mm]	15.0 x 15.0	6.0 x 6.0 x 1.5
Sensor Surface [mm]	3.0	1.4
Graded Grid	No	Yes
Grading Ratio	n/a	1.5
MAIA	Confirmed by MAIA	Confirmed by MAIA
Surface Detection	Yes	Yes
Scan Method	Measured	Measured

Measurement Results

	Area Scan	Zoom Scan
Date	2020-12-08, 09:12	2020-12-08, 09:17
SAR1g [W/Kg]	1.93	1.98
SAR10g [W/Kg]	0.985	1.03
Power Drift [dB]	-0.03	-0.02
Power Scaling	Disabled	Disabled
Scaling Factor [dB]		
TSL Correction	Positive Only	Positive Only

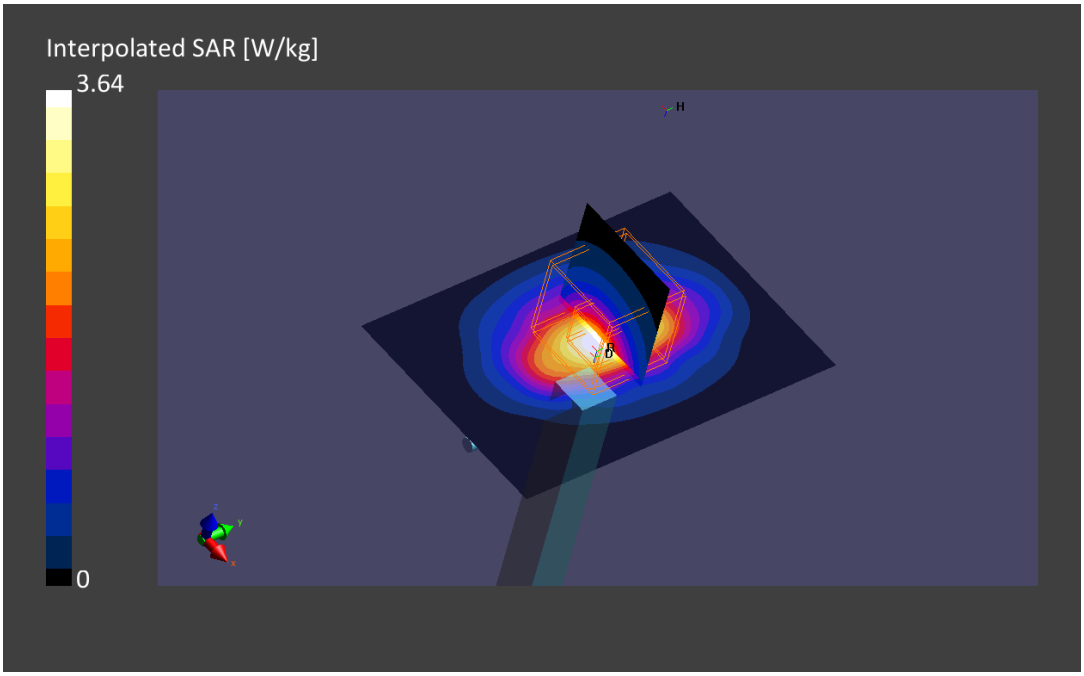

19. System Check Body Liquid 1900MHz – 2020-12-10

Device under Test Properties

Name, Manufacturer	Dimensions [mm]	Serial Number	DUT Type
Dipole 1900MHz, SPEAG	50.0 x 10.0 x 10.0	5d197	Validation Dipole

Exposure Conditions

Phantom Section, TSL	Position, Test Distance [mm]	Band	Group, UID	Frequency [MHz], Channel Number	Conversion Factor	TSL Conductivity [S/m]	TSL Permittivity
Flat, MSL				1900.0, 0	7.89	1.56	50.6

Hardware Setup

Phantom	TSL, Measured Date	Probe, Calibration Date	DAE, Calibration Date
ELI V8.0 (20deg probe tilt) - 2048	MBBL-600-6000, 2020-Dec-10	EX3DV4 - SN3978, 2020-05-22	DAE4 Sn1429, 2020-05-14

Scan Setup

	Area Scan	Zoom Scan
Grid Extents [mm]	60.0 x 90.0	30.0 x 30.0 x 30.0
Grid Steps [mm]	15.0 x 15.0	6.0 x 6.0 x 1.5
Sensor Surface [mm]	3.0	1.4
Graded Grid	No	Yes
Grading Ratio	n/a	1.5
MAIA	Confirmed by MAIA	Confirmed by MAIA
Surface Detection	Yes	Yes
Scan Method	Measured	Measured

Measurement Results

	Area Scan	Zoom Scan
Date	2020-12-10, 14:28	2020-12-10, 14:33
SAR 1g [W/Kg]	1.88	1.93
SAR 10g [W/Kg]	0.970	1.01
Power Drift [dB]	-0.00	0.01
Power Scaling	Disabled	Disabled
Scaling Factor [dB]		
TSL Correction	Positive Only	Positive Only

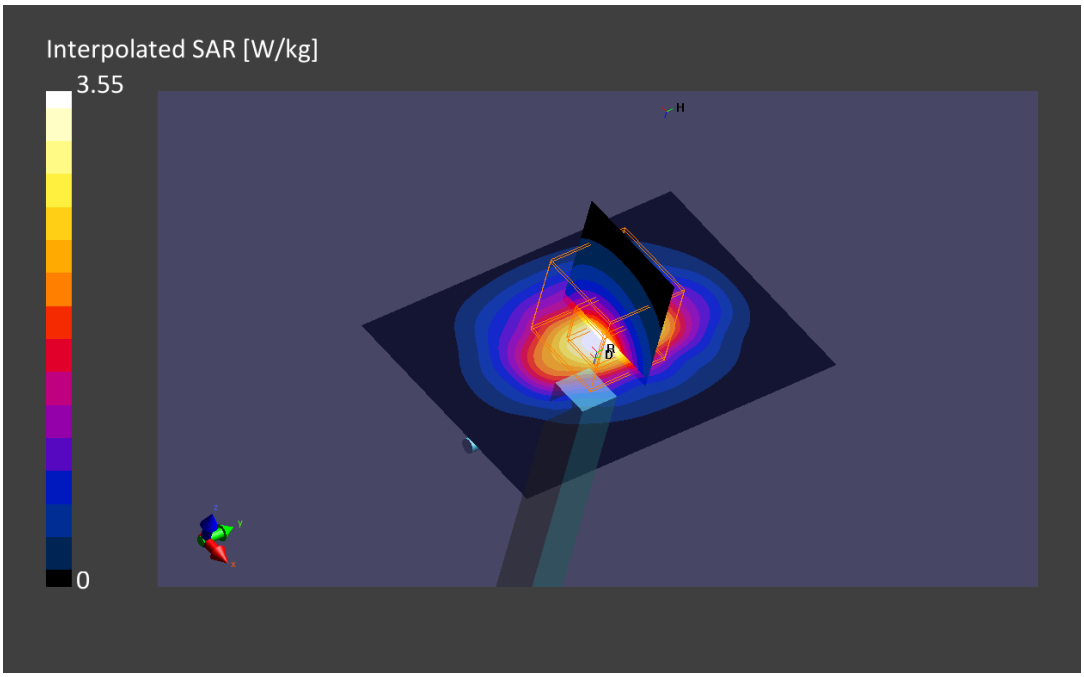

20. System Check Body Liquid 2300MHz

Device under Test Properties

Name, Manufacturer	Dimensions [mm]	Serial Number	DUT Type
D2300MHZ, SPEAG	50.0 x 10.0 x 10.0	1046	Validation Dipole

Exposure Conditions

Phantom Section, TSL	Position, Test Distance [mm]	Band	Group, UID	Frequency [MHz], Channel Number	Conversion Factor	TSL Conductivity [S/m]	TSL Permittivity
Flat, MSL				2300.0, 0	7.45	1.88	50.0

Hardware Setup

Phantom	TSL, Measured Date	Probe, Calibration Date	DAE, Calibration Date
ELI V8.0 (20deg probe tilt) - 2048	MBBL-600-6000, 2020-Dec-10	EX3DV4 - SN3978, 2020-05-22	DAE4 Sn1429, 2020-05-14

Scan Setup

	Area Scan	Zoom Scan
Grid Extents [mm]	40.0 x 80.0	30.0 x 30.0 x 30.0
Grid Steps [mm]	10.0 x 10.0	5.0 x 5.0 x 1.5
Sensor Surface [mm]	3.0	1.4
Graded Grid	No	Yes
Grading Ratio	n/a	1.5
MAIA	Confirmed by MAIA	Confirmed by MAIA
Surface Detection	Yes	Yes
Scan Method	Measured	Measured

Measurement Results

	Area Scan	Zoom Scan
Date	2020-12-10, 14:44	2020-12-10, 14:50
SAR 1g [W/Kg]	2.34	2.35
SAR 10g [W/Kg]	1.11	1.12
Power Drift [dB]	0.00	-0.02
Power Scaling	Disabled	Disabled
Scaling Factor [dB]		
TSL Correction	Positive Only	Positive Only

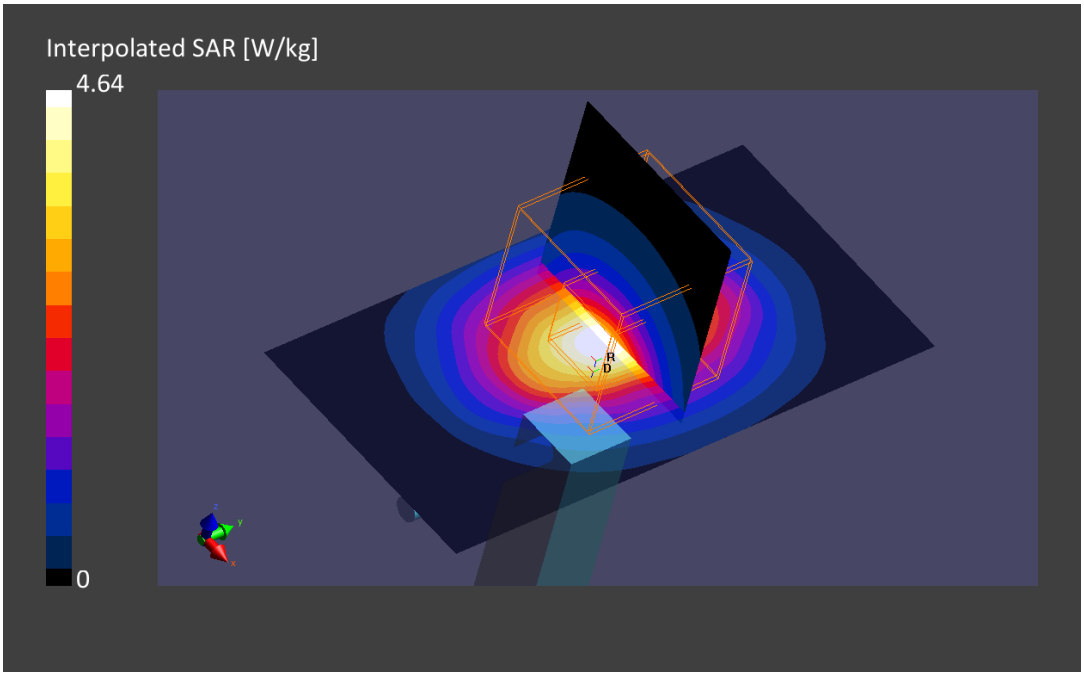

21. System Check Body Liquid 2600MHz

Device under Test Properties

Name, Manufacturer	Dimensions [mm]	S/N	DUT Type
Dipole 2600MHz, SPEAG	50.0 x 10.0 x 10.0	1100	Validation Dipole

Exposure Conditions

Phantom Section, TSL	Position, Test Distance [mm]	Band	Group, UID	Frequency [MHz], Channel Number	Conversion Factor	TSL Conductivity [S/m]	TSL Permittivity
Flat, MSL	,		, 0--	2600.0, 0	7.19	2.17	49.5

Hardware Setup

Phantom	TSL, Measured Date	Probe, Calibration Date	DAE, Calibration Date
ELI V8.0 (20deg probe tilt) - 2048	MBBL-600-6000, 2020-Dec-10	EX3DV4 - SN3978, 2020-05-22	DAE4 Sn1429, 2020-05-14

Scan Setup

	Area Scan	Zoom Scan
Grid Extents [mm]	40.0 x 80.0	30.0 x 30.0 x 30.0
Grid Steps [mm]	10.0 x 10.0	5.0 x 5.0 x 1.5
Sensor Surface [mm]	3.0	1.4
Graded Grid	No	Yes
Grading Ratio	n/a	1.5
MAIA	Confirmed by MAIA	Confirmed by MAIA
Surface Detection	Yes	Yes
Scan Method	Measured	Measured

Measurement Results

	Area Scan	Zoom Scan
Date	2020-12-10, 15:06	2020-12-10, 15:12
SAR1g [W/Kg]	2.60	2.65
SAR10g [W/Kg]	1.16	1.17
Power Drift [dB]	0.00	-0.00
Power Scaling	Disabled	Disabled
Scaling Factor [dB]		
TSL Correction	Positive Only	Positive Only

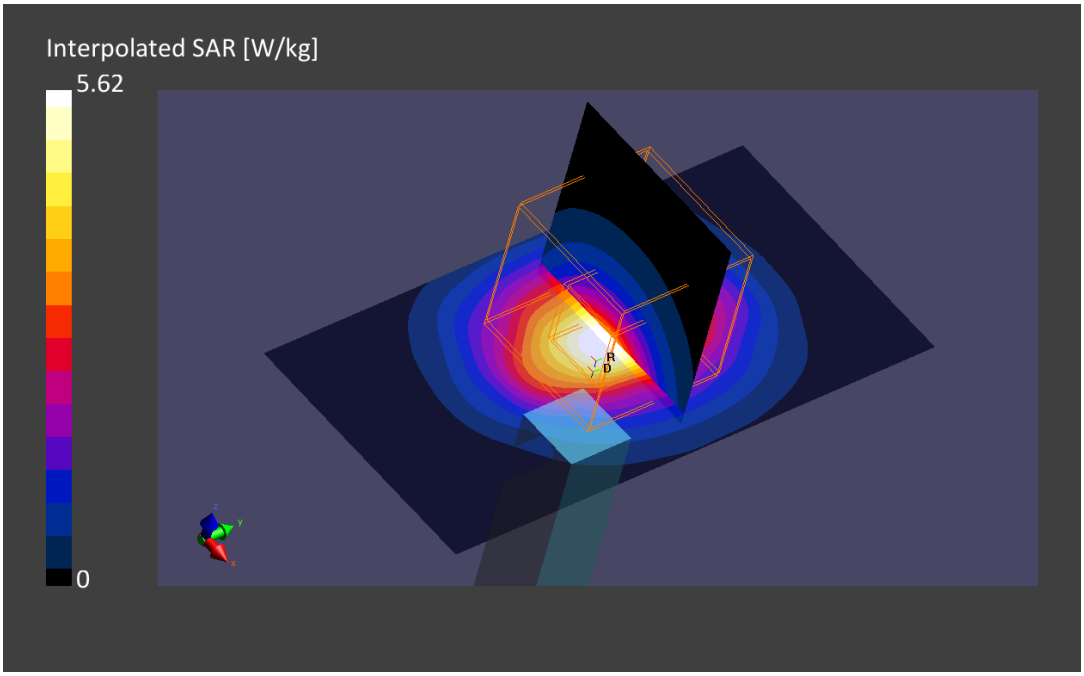

Annex D. TSL Dielectric Parameters

D.1 Body 600MHz-900MHz

Freq. (MHz)	Target		2020-12-08 Measured		2020-12-10 Measured	
	ε' (F/m)	σ (S/m)	ε'_1 (F/m)	σ_1 (S/m)	ε'_2 (F/m)	σ_2 (S/m)
700.0	55.73	0.96	53.81	0.87	52.79	0.9
710.0	55.69	0.96	53.78	0.87	52.76	0.91
720.0	55.65	0.96	53.75	0.88	52.73	0.91
730.0	55.61	0.96	53.72	0.88	52.7	0.92
740.0	55.57	0.96	53.7	0.88	52.66	0.92
750.0	55.53	0.96	53.67	0.89	52.63	0.92
760.0	55.49	0.96	53.65	0.89	52.61	0.93
770.0	55.45	0.96	53.63	0.89	52.58	0.93
780.0	55.41	0.97	53.61	0.9	52.55	0.93
790.0	55.38	0.97	53.58	0.9	52.52	0.94
800.0	55.34	0.97	53.56	0.91	52.5	0.94
810.0	55.3	0.97	53.54	0.91	52.47	0.95
820.0	55.26	0.98	53.52	0.91	52.44	0.95
830.0	55.23	0.98	53.5	0.92	52.42	0.96
840.0	55.19	0.98	53.48	0.92	52.39	0.96
850.0	55.15	0.99	53.47	0.93	52.37	0.96
860.0	55.12	1.0	53.45	0.93	52.34	0.97
870.0	55.09	1.01	53.43	0.93	52.32	0.97
880.0	55.06	1.03	53.42	0.94	52.3	0.98
890.0	55.03	1.04	53.4	0.94	52.27	0.98
900.0	55.0	1.05	53.38	0.95	52.25	0.99

Permittivity	Conductivity
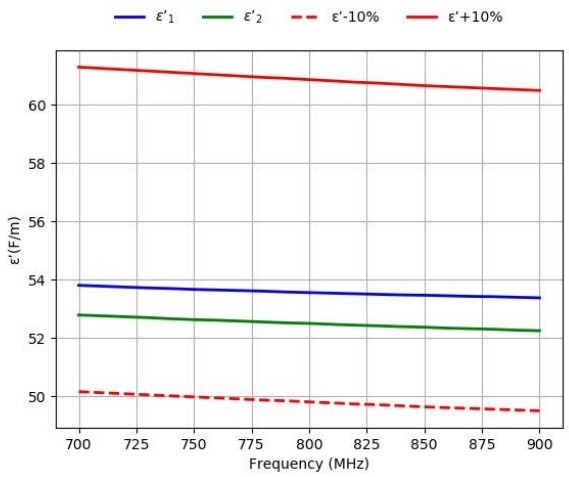	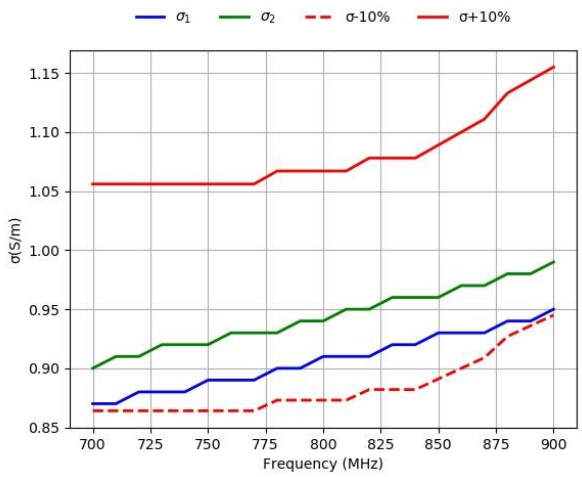

D.2 Body 1700MHz-2000MHz

Freq. (MHz)	Measured		2020-12-08 Measured		2020-12-10 Measured	
	ε'_1 (F/m)	σ_1 (S/m)	ε'_1 (F/m)	σ_1 (S/m)	ε'_2 (F/m)	σ_2 (S/m)
1700	53.56	1.46	51.96	1.39	50.83	1.42
1710	53.54	1.46	51.95	1.4	50.82	1.42
1720	53.51	1.47	51.93	1.41	50.8	1.43
1730	53.48	1.48	51.91	1.41	50.79	1.44
1740	53.46	1.48	51.9	1.42	50.78	1.44
1750	53.43	1.49	51.88	1.43	50.77	1.45
1760	53.41	1.49	51.87	1.44	50.75	1.46
1770	53.38	1.5	51.85	1.44	50.74	1.46
1780	53.35	1.51	51.84	1.45	50.73	1.47
1790	53.33	1.51	51.82	1.46	50.72	1.48
1800	53.3	1.52	51.81	1.46	50.7	1.48
1810	53.3	1.52	51.79	1.47	50.69	1.49
1820	53.3	1.52	51.78	1.48	50.68	1.5
1830	53.3	1.52	51.76	1.48	50.66	1.51
1840	53.3	1.52	51.74	1.49	50.65	1.51
1850	53.3	1.52	51.73	1.5	50.63	1.52
1860	53.3	1.52	51.71	1.51	50.62	1.53
1870	53.3	1.52	51.7	1.51	50.61	1.53
1880	53.3	1.52	51.68	1.52	50.59	1.54
1890	53.3	1.52	51.67	1.53	50.58	1.55
1900	53.3	1.52	51.66	1.54	50.57	1.56
1910	53.3	1.52	51.64	1.54	50.55	1.56
1920	53.3	1.52	51.63	1.55	50.54	1.57
1930	53.3	1.52	51.61	1.56	50.52	1.58
1940	53.3	1.52	51.6	1.57	50.51	1.58
1950	53.3	1.52	51.58	1.57	50.5	1.59
1960	53.3	1.52	51.57	1.58	50.48	1.6
1970	53.3	1.52	51.55	1.59	50.47	1.61
1980	53.3	1.52	51.54	1.6	50.45	1.61
1990	53.3	1.52	51.53	1.6	50.44	1.62
2000	53.3	1.52	51.51	1.61	50.43	1.63

Permittivity	Conductivity
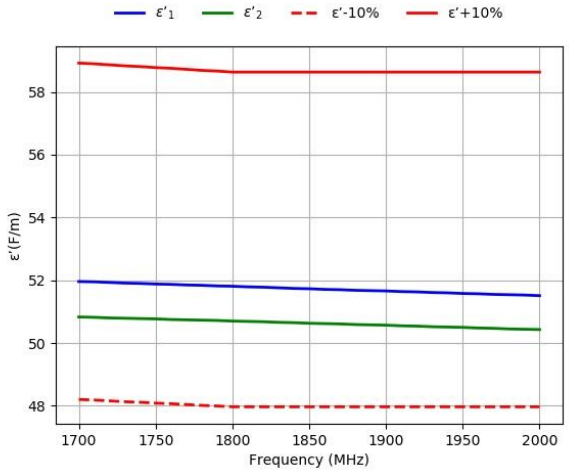	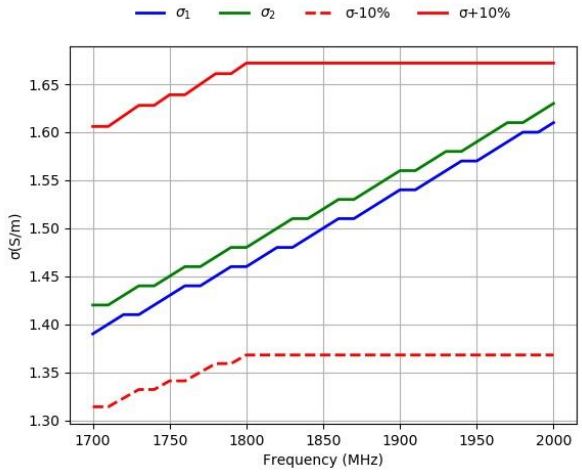

D.3 Body 2300MHz-2700MHz

Freq. (MHz)	Target		2020-12-10 Measured	
	ε' (F/m)	σ (S/m)	ε'$_1$ (F/m)	σ$_1$ (S/m)
2300	52.9	1.81	50.0	1.88
2310	52.89	1.82	49.99	1.89
2320	52.87	1.83	49.97	1.9
2330	52.86	1.84	49.95	1.91
2340	52.85	1.84	49.94	1.92
2350	52.83	1.85	49.92	1.93
2360	52.82	1.86	49.91	1.94
2370	52.81	1.87	49.89	1.95
2380	52.79	1.88	49.88	1.96
2390	52.78	1.89	49.86	1.97
2400	52.77	1.9	49.84	1.97
2410	52.75	1.91	49.83	1.98
2420	52.74	1.92	49.81	1.99
2430	52.73	1.93	49.8	2.0
2440	52.71	1.94	49.78	2.01
2450	52.7	1.95	49.76	2.02
2460	52.69	1.96	49.75	2.03
2470	52.67	1.98	49.73	2.04
2480	52.66	1.99	49.71	2.05
2490	52.65	2.01	49.7	2.06
2500	52.64	2.02	49.68	2.07
2510	52.62	2.04	49.66	2.08
2520	52.61	2.05	49.64	2.09
2530	52.6	2.06	49.62	2.1
2540	52.59	2.08	49.6	2.11
2550	52.57	2.09	49.58	2.12
2560	52.56	2.11	49.56	2.13
2570	52.55	2.12	49.54	2.14
2580	52.53	2.13	49.52	2.15
2590	52.52	2.15	49.5	2.16
2600	52.51	2.16	49.48	2.17
2610	52.5	2.18	49.46	2.18
2620	52.48	2.19	49.44	2.19
2630	52.47	2.21	49.42	2.2
2640	52.46	2.22	49.4	2.21
2650	52.45	2.23	49.38	2.22
2660	52.43	2.25	49.36	2.23
2670	52.42	2.26	49.33	2.24
2680	52.41	2.28	49.31	2.25
2690	52.39	2.29	49.29	2.26
2700	52.38	2.3	49.27	2.27
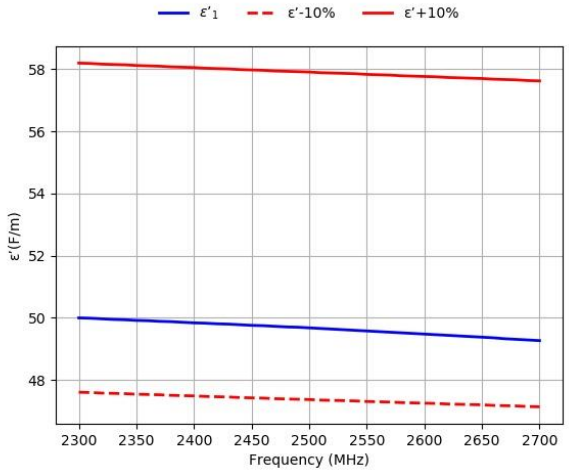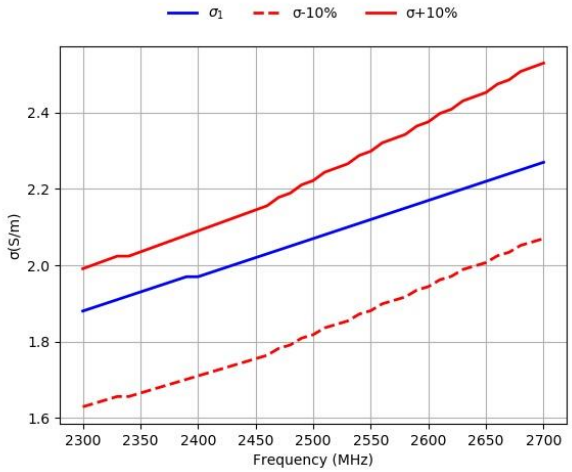
Permittivity	Conductivity