FCC SAR Test Report

APPLICANT	:	Hewlett-Packard Company
EQUIPMENT	:	WWAN Module Card
BRAND NAME	:	HP
MODEL NAME	:	MU736
FCC ID	:	B94HNHWWR
STANDARD	:	FCC 47 CFR Part 2 (2.1093) ANSI/IEEE C95.1-1992 IEEE 1528-2003

The product was installed into Notebook PC (Brand Name HP, Model Name: TPN-C115) during test.

We, SPORTON INTERNATIONAL INC., would like to declare that the tested sample has been evaluated in accordance with the procedures and shown the compliance with the applicable technical standards.

The test results in this report apply exclusively to the tested model / sample. Without written approval of SPORTON INTERNATIONAL INC., the test report shall not be reproduced except in full.

Reviewed by: Eric Huang / Deputy Manager

Approved by: Jones Tsai / Manager

Testing Laboratory
1190

SPORTON INTERNATIONAL INC.
No. 52, Hwa Ya 1st Rd., Hwa Ya Technology Park, Kwei-Shan Hsiang, Tao Yuan Hsien, Taiwan, R.O.C.

Table of Contents

1. Statement of Compliance **4**
2. Administration Data **5**
3. Guidance Standard **5**
4. Equipment Under Test (EUT) **6**
4.1 General Information 6
4.2 Maximum Tune-up Limit 7
5. RF Exposure Limits **8**
5.1 Uncontrolled Environment 8
5.2 Controlled Environment 8
6. Specific Absorption Rate (SAR) **9**
6.1 Introduction 9
6.2 SAR Definition 9
7. System Description and Setup **10**
8. Measurement Procedures **11**
8.1 Spatial Peak SAR Evaluation 11
8.2 Power Reference Measurement 12
8.3 Area Scan 12
8.4 Zoom Scan 13
8.5 Volume Scan Procedures 13
8.6 Power Drift Monitoring 13
9. Test Equipment List **14**
10. System Verification **15**
10.1 Tissue Verification 15
10.2 System Performance Check Results 16
11. RF Exposure Positions **16**
11.1 SAR Testing for Tablet 16
12. Conducted RF Output Power (Unit: dBm) **17**
13. Antenna Location **21**
14. SAR Test Results **24**
14.1 Body SAR 24
14.2 Repeated SAR Measurement 25
15. Simultaneous Transmission Analysis **26**
15.1 Body Exposure Conditions 27
16. Uncertainty Assessment **29**
17. References **31**
Appendix A. Plots of System Performance Check
Appendix B. Plots of High SAR Measurement
Appendix C. DASY Calibration Certificate
Appendix D. Test Setup Photos

Revision History

REPORT NO.	VERSION	DESCRIPTION	ISSUED DATE
FA3D1372-04	Rev. 01	Initial issue of report	May 12, 2014
FA3D1372-04	Rev. 02	Corrected WCDMA V Max SAR value on page4.	Jun 08, 2014

1. Statement of Compliance

The maximum results of Specific Absorption Rate (SAR) found during testing for **Hewlett-Packard Company, WWAN Module Card, MU736**, are as follows.

Equipment Class	Frequency Band	Highest SAR Summary	
		Body (Separation 0mm) 1g SAR (W/kg)	Simultaneous Transmission 1g SAR (W/kg)
PCB	GSM850	0.55	1.37
	GSM1900	0.50	
	WCDMA Band V	0.55	
	WCDMA Band IV	**1.35**	
	WCDMA Band II	0.86	
Date of Testing:		04/18/2014 ~ 04/19/2014	

This device is in compliance with Specific Absorption Rate (SAR) for general population/uncontrolled exposure limits (1.6 W/kg) specified in FCC 47 CFR part 2 (2.1093) and ANSI/IEEE C95.1-1992, and had been tested in accordance with the measurement methods and procedures specified in IEEE 1528-2003.

2. Administration Data

Testing Laboratory	
Test Site	SPORTON INTERNATIONAL INC.
Test Site Location	No. 52, Hwa Ya 1st Rd., Hwa Ya Technology Park, Kwei-Shan Hsiang, Tao Yuan Hsien, Taiwan, R.O.C. TEL: +886-3-327-3456 FAX: +886-3-328-4978

Applicant	
Company Name	Hewlett-Packard Company
Address	3000 Hanover Street, Palo Alto, California 94304, USA

Manufacturer	
Company Name	Huawei Technologies Co., Ltd.
Address	Administration Building, Headquarters of Huawei Technologies Co., Ltd., Bantian, Longgang District, Shenzheng, 518129, P.R.C.

3. Guidance Standard

The Specific Absorption Rate (SAR) testing specification, method, and procedure for this device is in accordance with the following standards:

- FCC 47 CFR Part 2 (2.1093)
- ANSI/IEEE C95.1-1992
- IEEE 1528-2003
- FCC KDB 865664 D01 SAR Measurement 100 MHz to 6 GHz v01r03
- FCC KDB 865664 D02 SAR Reporting v01r01
- FCC KDB 447498 D01 General RF Exposure Guidance v05r02
- FCC KDB 616217 D04 SAR for laptop and tablets v01r01
- FCC KDB 941225 D01 SAR test for 3G devices v02
- FCC KDB 941225 D02 HSPA and 1x Advanced v02r02
- FCC KDB 941225 D03 SAR Test Reduction GSM GPRS EDGE v01

4. Equipment Under Test (EUT)

4.1 General Information

Product Feature & Specification	
Equipment Name	WWAN Module Card
Brand Name	HP
Model Name	MU736
FCC ID	B94HNHWWR
IMEI Code	355870051689294
Wireless Technology and Frequency Range	GSM850: 824.2 MHz ~ 848.8 MHz GSM1900: 1850.2 MHz ~ 1909.8 MHz WCDMA Band V: 826.4 MHz ~ 846.6 MHz WCDMA Band IV: 1712.4 MHz ~ 1752.6 MHz WCDMA Band II: 1852.4 MHz ~ 1907.6 MHz
Mode	• GSM/GPRS/EGPRS • RMC 12.2Kbps • HSDPA • HSUPA
EUT Stage	Identical Prototype

Remark:
1. This device supports GRPS/EGPRS mode up to multi-slot class12.
2. This host, the display screen can be rotated 360 degree and lay down on the back surface become a "Tablet PC", RF Exposure evaluation was performed on the two configuration of Tablet mode and NB mode.
3. The below table of the WLAN modules are also integrated into this host and completed CIICP filing, these module WLAN SAR testing results were used assessment transmit simultaneous and these results can be referred to Sporton SAR test report.

Host Feature & Specification					
Host	Notebook PC				
Brand Name	HP				
Model Name	TPN-C115				
Antenna Type	PIFA Antenna				
Integrated WLAN Module 1	Brand Name:	Realtek	Integrated WLAN Module 3	Brand Name:	Qualcomm Atheros
	Model Name:	RTL8188EE		Model Name:	AR5B125
	FCC ID:	TX2-RTL8188EE		FCC ID:	PPD-AR5B125
	Report No:	FA3D1372 Rev.01		Report No:	FA3D1372-02 Rev.02
	Final Action Date:	01/21/2014		Final Action Date:	02/11/2014
Integrated WLAN Module 2	Brand Name:	Qualcomm Atheros	Integrated WLAN Module 4	Brand Name:	Ralink
	Model Name:	QCWB335		Model Name:	RT3290
	FCC ID:	PPD-QCWB335		FCC ID:	VFQ-RT3290
	Report No:	FA3D1372-01 Rev.02		Report No:	FA3D1372-03 Rev.01
	Final Action Date:	02/08/2014		Final Action Date:	01/24/2014

4.2 Maximum Tune-up Limit

Mode	Burst average power(dBm)	
	GSM 850	GSM 1900
GPRS/EDGE (GMSK, 1 Tx slot)	33.5	30.5
GPRS/EDGE (GMSK, 2 Tx slots)	31.0	28.0
GPRS/EDGE (GMSK, 3 Tx slots)	29.5	26.5
GPRS/EDGE (GMSK, 4 Tx slots)	28.0	25.0
EDGE (8PSK, 1 Tx slot)	28.0	27.0
EDGE (8PSK, 2 Tx slots)	25.5	24.5
EDGE (8PSK, 3 Tx slot)	24.0	23.0
EDGE (8PSK, 4 Tx slots)	22.5	21.5

Mode	Average power(dBm)		
	WCDMA Band V	WCDMA Band II	WCDMA Band IV
RMC 12.2Kbps	24.5	24.5	24.5
HSDPA Subtest-1	24.5	24.5	24.5
HSUPA Subtest-5	24.5	24.5	24.5

5. RF Exposure Limits

5.1 Uncontrolled Environment

Uncontrolled Environments are defined as locations where there is the exposure of individuals who have no knowledge or control of their exposure. The general population/uncontrolled exposure limits are applicable to situations in which the general public may be exposed or in which persons who are exposed as a consequence of their employment may not be made fully aware of the potential for exposure or cannot exercise control over their exposure. Members of the general public would come under this category when exposure is not employment-related; for example, in the case of a wireless transmitter that exposes persons in its vicinity.

5.2 Controlled Environment

Controlled Environments are defined as locations where there is exposure that may be incurred by persons who are aware of the potential for exposure, (i.e. as a result of employment or occupation). In general, occupational/controlled exposure limits are applicable to situations in which persons are exposed as a consequence of their employment, who have been made fully aware of the potential for exposure and can exercise control over their exposure. The exposure category is also applicable when the exposure is of a transient nature due to incidental passage through a location where the exposure levels may be higher than the general population/uncontrolled limits, but the exposed person is fully aware of the potential for exposure and can exercise control over his or her exposure by leaving the area or by some other appropriate means.

Limits for Occupational/Controlled Exposure (W/kg)

Whole-Body	Partial-Body	Hands, Wrists, Feet and Ankles
0.4	8.0	20.0

Limits for General Population/Uncontrolled Exposure (W/kg)

Whole-Body	Partial-Body	Hands, Wrists, Feet and Ankles
0.08	1.6	4.0

1. Whole-Body SAR is averaged over the entire body, partial-body SAR is averaged over any 1gram of tissue defined as a tissue volume in the shape of a cube. SAR for hands, wrists, feet and ankles is averaged over any 10 grams of tissue defined as a tissue volume in the shape of a cube.

6. Specific Absorption Rate (SAR)

6.1 Introduction

SAR is related to the rate at which energy is absorbed per unit mass in an object exposed to a radio field. The SAR distribution in a biological body is complicated and is usually carried out by experimental techniques or numerical modeling. The standard recommends limits for two tiers of groups, occupational/controlled and general population/uncontrolled, based on a person's awareness and ability to exercise control over his or her exposure. In general, occupational/controlled exposure limits are higher than the limits for general population/uncontrolled.

6.2 SAR Definition

The SAR definition is the time derivative (rate) of the incremental energy (dW) absorbed by (dissipated in) an incremental mass (dm) contained in a volume element (dv) of a given density (ρ). The equation description is as below:

$$\mathbf{SAR} = \frac{\mathbf{d}}{\mathbf{dt}}\left(\frac{\mathbf{dW}}{\mathbf{dm}}\right) = \frac{\mathbf{d}}{\mathbf{dt}}\left(\frac{\mathbf{dW}}{\boldsymbol{\rho}\mathbf{dv}}\right)$$

SAR is expressed in units of Watts per kilogram (W/kg)

$$\mathbf{SAR} = \frac{\boldsymbol{\sigma}|\mathbf{E}|^2}{\boldsymbol{\rho}}$$

Where: σ is the conductivity of the tissue, ρ is the mass density of the tissue and E is the RMS electrical field strength.

7. System Description and Setup

The DASY system used for performing compliance tests consists of the following items:

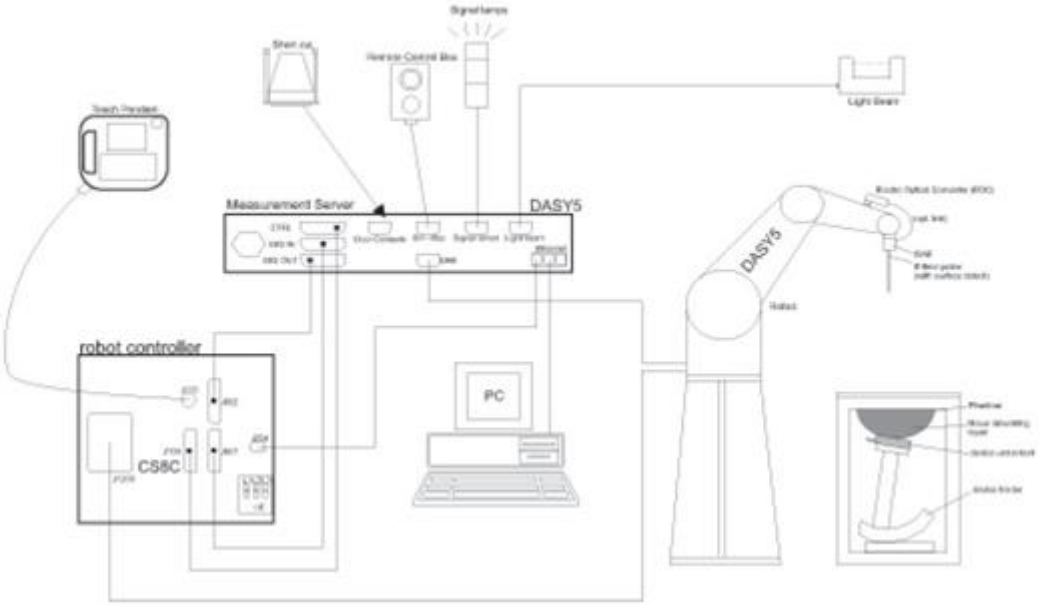

- A standard high precision 6-axis robot with controller, teach pendant and software. An arm extension for accommodating the data acquisition electronics (DAE).
- An isotropic Field probe optimized and calibrated for the targeted measurement.
- A data acquisition electronics (DAE) which performs the signal amplification, signal multiplexing, AD-conversion, offset measurements, mechanical surface detection, collision detection, etc. The unit is battery powered with standard or rechargeable batteries. The signal is optically transmitted to the EOC.
- The Electro-optical converter (EOC) performs the conversion from optical to electrical signals for the digital communication to the DAE. To use optical surface detection, a special version of the EOC is required. The EOC signal is transmitted to the measurement server.
- The function of the measurement server is to perform the time critical tasks such as signal filtering, control of the robot operation and fast movement interrupts.
- The Light Beam used is for probe alignment. This improves the (absolute) accuracy of the probe positioning.
- A computer running WinXP or Win7 and the DASY5 software.
- Remote control and teach pendant as well as additional circuitry for robot safety such as warning lamps, etc.
- The phantom, the device holder and other accessories according to the targeted measurement.

8. Measurement Procedures

The measurement procedures are as follows:

<Conducted power measurement>

(a) For WWAN power measurement, use base station simulator to configure EUT WWAN transmission in conducted connection with RF cable, at maximum power in each supported wireless interface and frequency band.
(b) Read the WWAN RF power level from the base station simulator.
(c) For WLAN/BT power measurement, use engineering software to configure EUT WLAN/BT continuously transmission, at maximum RF power in each supported wireless interface and frequency band
(d) Connect EUT RF port through RF cable to the power meter, and measure WLAN/BT output power

<SAR measurement>

(a) Use base station simulator to configure EUT WWAN transmission in radiated connection, and engineering software to configure EUT WLAN/BT continuously transmission, at maximum RF power, in the highest power channel.
(b) Place the EUT in the positions as Appendix D demonstrates.
(c) Set scan area, grid size and other setting on the DASY software.
(d) Measure SAR results for the highest power channel on each testing position.
(e) Find out the largest SAR result on these testing positions of each band
(f) Measure SAR results for other channels in worst SAR testing position if the reported SAR of highest power channel is larger than 0.8 W/kg

According to the test standard, the recommended procedure for assessing the peak spatial-average SAR value consists of the following steps:

(a) Power reference measurement
(b) Area scan
(c) Zoom scan
(d) Power drift measurement

8.1 Spatial Peak SAR Evaluation

The procedure for spatial peak SAR evaluation has been implemented according to the test standard. It can be conducted for 1g and 10g, as well as for user-specific masses. The DASY software includes all numerical procedures necessary to evaluate the spatial peak SAR value.

The base for the evaluation is a "cube" measurement. The measured volume must include the 1g and 10g cubes with the highest averaged SAR values. For that purpose, the center of the measured volume is aligned to the interpolated peak SAR value of a previously performed area scan.

The entire evaluation of the spatial peak values is performed within the post-processing engine (SEMCAD). The system always gives the maximum values for the 1g and 10g cubes. The algorithm to find the cube with highest averaged SAR is divided into the following stages:

(a) Extraction of the measured data (grid and values) from the Zoom Scan
(b) Calculation of the SAR value at every measurement point based on all stored data (A/D values and measurement parameters)
(c) Generation of a high-resolution mesh within the measured volume
(d) Interpolation of all measured values form the measurement grid to the high-resolution grid
(e) Extrapolation of the entire 3-D field distribution to the phantom surface over the distance from sensor to surface
(f) Calculation of the averaged SAR within masses of 1g and 10g

8.2 Power Reference Measurement

The Power Reference Measurement and Power Drift Measurements are for monitoring the power drift of the device under test in the batch process. The minimum distance of probe sensors to surface determines the closest measurement point to phantom surface. This distance cannot be smaller than the distance of sensor calibration points to probe tip as defined in the probe properties.

8.3 Area Scan

The area scan is used as a fast scan in two dimensions to find the area of high field values, before doing a fine measurement around the hot spot. The sophisticated interpolation routines implemented in DASY software can find the maximum found in the scanned area, within a range of the global maximum. The range (in dB0 is specified in the standards for compliance testing. For example, a 2 dB range is required in IEEE standard 1528 and IEC 62209 standards, whereby 3 dB is a requirement when compliance is assessed in accordance with the ARIB standard (Japan), if only one zoom scan follows the area scan, then only the absolute maximum will be taken as reference. For cases where multiple maximums are detected, the number of zoom scans has to be increased accordingly.

Area scan parameters extracted from FCC KDB 865664 D01v01r03 SAR measurement 100 MHz to 6 GHz.

	≤ 3 GHz	> 3 GHz
Maximum distance from closest measurement point (geometric center of probe sensors) to phantom surface	5 ± 1 mm	½·δ·ln(2) ± 0.5 mm
Maximum probe angle from probe axis to phantom surface normal at the measurement location	30° ± 1°	20° ± 1°
Maximum area scan spatial resolution: Δx_{Area}, Δy_{Area}	≤ 2 GHz: ≤ 15 mm 2 – 3 GHz: ≤ 12 mm	3 – 4 GHz: ≤ 12 mm 4 – 6 GHz: ≤ 10 mm
	When the x or y dimension of the test device, in the measurement plane orientation, is smaller than the above, the measurement resolution must be ≤ the corresponding x or y dimension of the test device with at least one measurement point on the test device.	

8.4 Zoom Scan

Zoom scans are used assess the peak spatial SAR values within a cubic averaging volume containing 1 gram and 10 gram of simulated tissue. The zoom scan measures points (refer to table below) within a cube shoes base faces are centered on the maxima found in a preceding area scan job within the same procedure. When the measurement is done, the zoom scan evaluates the averaged SAR for 1 gram and 10 gram and displays these values next to the job's label.

Zoom scan parameters extracted from FCC KDB 865664 D01v01r03 SAR measurement 100 MHz to 6 GHz.

			≤ 3 GHz	> 3 GHz
Maximum zoom scan spatial resolution: Δx_{Zoom}, Δy_{Zoom}			≤ 2 GHz: ≤ 8 mm 2 – 3 GHz: ≤ 5 mm*	3 – 4 GHz: ≤ 5 mm* 4 – 6 GHz: ≤ 4 mm*
Maximum zoom scan spatial resolution, normal to phantom surface	uniform grid: $\Delta z_{Zoom}(n)$		≤ 5 mm	3 – 4 GHz: ≤ 4 mm 4 – 5 GHz: ≤ 3 mm 5 – 6 GHz: ≤ 2 mm
	graded grid	$\Delta z_{Zoom}(1)$: between 1st two points closest to phantom surface	≤ 4 mm	3 – 4 GHz: ≤ 3 mm 4 – 5 GHz: ≤ 2.5 mm 5 – 6 GHz: ≤ 2 mm
		$\Delta z_{Zoom}(n>1)$: between subsequent points	$\leq 1.5 \cdot \Delta z_{Zoom}(n-1)$	
Minimum zoom scan volume	x, y, z		≥ 30 mm	3 – 4 GHz: ≥ 28 mm 4 – 5 GHz: ≥ 25 mm 5 – 6 GHz: ≥ 22 mm

Note: δ is the penetration depth of a plane-wave at normal incidence to the tissue medium; see draft standard IEEE P1528-2011 for details.

* When zoom scan is required and the *reported* SAR from the *area scan based 1-g SAR estimation* procedures of KDB 447498 is ≤ 1.4 W/kg, ≤ 8 mm, ≤ 7 mm and ≤ 5 mm zoom scan resolution may be applied, respectively, for 2 GHz to 3 GHz, 3 GHz to 4 GHz and 4 GHz to 6 GHz.

8.5 Volume Scan Procedures

The volume scan is used for assess overlapping SAR distributions for antennas transmitting in different frequency bands. It is equivalent to an oversized zoom scan used in standalone measurements. The measurement volume will be used to enclose all the simultaneous transmitting antennas. For antennas transmitting simultaneously in different frequency bands, the volume scan is measured separately in each frequency band. In order to sum correctly to compute the 1g aggregate SAR, the EUT remain in the same test position for all measurements and all volume scan use the same spatial resolution and grid spacing. When all volume scan were completed, the software, SEMCAD postprocessor can combine and subsequently superpose these measurement data to calculating the multiband SAR.

8.6 Power Drift Monitoring

All SAR testing is under the EUT install full charged battery and transmit maximum output power. In DASY measurement software, the power reference measurement and power drift measurement procedures are used for monitoring the power drift of EUT during SAR test. Both these procedures measure the field at a specified reference position before and after the SAR testing. The software will calculate the field difference in dB. If the power drifts more than 5%, the SAR will be retested.

9. Test Equipment List

Manufacturer	Name of Equipment	Type/Model	Serial Number	Calibration	
				Last Cal.	Due Date
SPEAG	835MHz System Validation Kit	D835V2	499	Mar. 24, 2014	Mar. 23, 2015
SPEAG	1750MHz System Validation Kit	D1750V2	1068	Nov. 27, 2013	Nov. 26, 2014
SPEAG	1900MHz System Validation Kit	D1900V2	5d041	Mar. 21, 2014	Mar. 20, 2015
SPEAG	Data Acquisition Electronics	DAE3	495	May. 08, 2013	May. 07, 2014
SPEAG	Dosimetric E-Field Probe	EX3DV4	3925	Jun. 12, 2013	Jun. 11, 2014
H.M.IRIS	Thermometer	TH-08	TM658	Oct. 22, 2013	Oct. 21, 2014
Anritsu	Radio Communication Analyzer	MT8820C	6201074414	Feb. 11, 2014	Feb. 10, 2015
SPEAG	Device Holder	N/A	N/A	NCR	NCR
Agilent	Signal Generator	E4438C	MY49070755	Oct. 08, 2013	Oct. 07, 2014
SPEAG	Dielectric Probe Kit	DAK-3.5	1126	Jul. 23, 2013	Jul. 22, 2014
Agilent	ENA Network Analyzer	E5071C	MY46316648	Feb. 07, 2014	Feb. 06, 2015
Anritsu	Power Meter	ML2495A	1349001	Dec. 04, 2013	Dec. 03, 2014
Anritsu	Power Sensor	MA2411B	1306099	Dec. 03, 2013	Dec. 02, 2014
R&S	Spectrum Analyzer	FSP 7	101131	Jul. 09, 2013	Jul. 08, 2014
Agilent	Dual Directional Coupler	778D	50422	*CBT	
Woken	Attenuator	WK0602-XX	N/A	*CBT	
PE	Attenuator	PE7005-10	N/A	*CBT	
PE	Attenuator	PE7005- 3	N/A	*CBT	
AR	Power Amplifier	5S1G4M2	0328767	*CBT	
Mini-Circuits	Power Amplifier	ZVE-3W	162601250	*CBT	
Mini-Circuits	Power Amplifier	ZHL-42W+	13440021344	*CBT	

General Note:

1. The calibration certificate of DASY can be referred to appendix C of this report.
2. *CBT (Calibrated Before Testing). Prior to testing, the measurement paths containing an amplifier, coupler and attenuator were connected to a calibrated source (i.e. a signal generator) to determine the losses of the measurement path. The power meter offset was then adjusted to compensate for the measurement system losses. This level offset is stored within the power meter before measurements are made. The calibrated reading is then taken directly from the power meter after compensation of the losses for all final power measurement.

10. System Verification

10.1 Tissue Verification

The following tissue formulations are provided for reference only as some of the parameters have not been thoroughly verified. The composition of ingredients may be modified accordingly to achieve the desired target tissue parameters required for routine SAR evaluation.

Frequency (MHz)	Water (%)	Sugar (%)	Cellulose (%)	Salt (%)	Preventol (%)	DGBE (%)	Conductivity (σ)	Permittivity (εr)
For Head								
750	41.1	57.0	0.2	1.4	0.2	0	0.89	41.9
835	40.3	57.9	0.2	1.4	0.2	0	0.90	41.5
900	40.3	57.9	0.2	1.4	0.2	0	0.97	41.5
1800, 1900, 2000	55.2	0	0	0.3	0	44.5	1.40	40.0
2450	55.0	0	0	0	0	45.0	1.80	39.2
2600	54.8	0	0	0.1	0	45.1	1.96	39.0
For Body								
750	51.7	47.2	0	0.9	0.1	0	0.96	55.5
835	50.8	48.2	0	0.9	0.1	0	0.97	55.2
900	50.8	48.2	0	0.9	0.1	0	1.05	55.0
1800, 1900, 2000	70.2	0	0	0.4	0	29.4	1.52	53.3
2450	68.6	0	0	0	0	31.4	1.95	52.7
2600	68.1	0	0	0.1	0	31.8	2.16	52.5

Simulating Liquid for 5GHz, Manufactured by SPEAG

Ingredients	(% by weight)
Water	64~78%
Mineral oil	11~18%
Emulsifiers	9~15%
Additives and Salt	2~3%

<Tissue Dielectric Parameter Check Results>

Frequency (MHz)	Tissue Type	Liquid Temp. (℃)	Conductivity (σ)	Permittivity (εr)	Conductivity Target (σ)	Permittivity Target (εr)	Delta (σ) (%)	Delta (εr) (%)	Limit (%)	Date
835	Body	22.3	0.958	54.278	0.97	55.20	-1.24	-1.67	±5	2014/4/19
1750	Body	22.6	1.489	53.395	1.52	53.30	-2.04	0.18	±5	2014/4/19
1900	Body	22.6	1.517	53.129	1.52	53.30	-0.20	-0.32	±5	2014/4/18

10.2 System Performance Check Results

Comparing to the original SAR value provided by SPEAG, the verification data should be within its specification of 10 %. Below table shows the target SAR and measured SAR after normalized to 1W input power. The table below indicates the system performance check can meet the variation criterion and the plots can be referred to Appendix A of this report.

Date	Frequency (MHz)	Tissue Type	Input Power (mW)	Dipole S/N	Probe S/N	DAE S/N	Measured SAR (W/kg)	Targeted SAR (W/kg)	Normalized SAR (W/kg)	Deviation (%)
2014/4/19	835	Body	250	D835V2-499	3925	495	2.50	9.46	10.00	5.71
2014/4/19	1750	Body	250	D1750V2-1068	3925	495	9.14	37.50	36.56	-2.51
2014/4/18	1900	Body	250	D1900V2-5d041	3925	495	9.66	41.00	38.64	-5.76

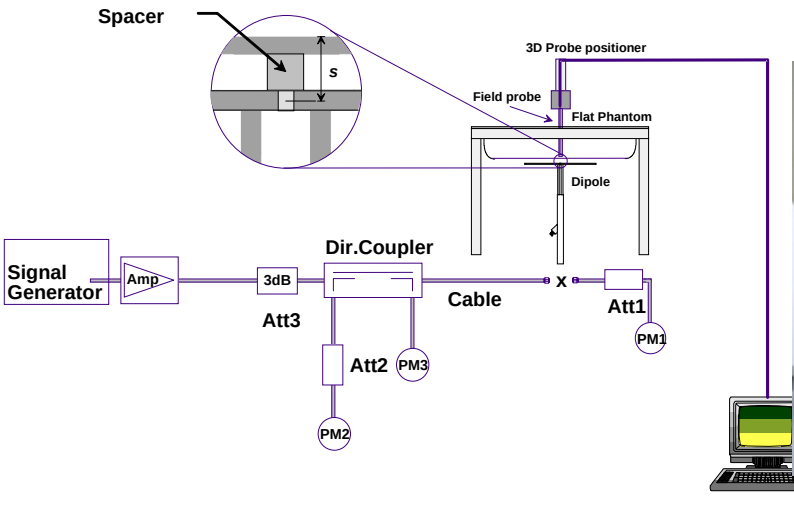

Fig 8.3.1 System Performance Check Setup

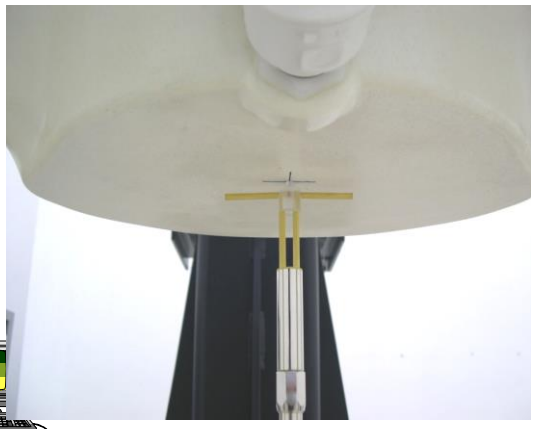

Fig 8.3.2 Setup Photo

11. RF Exposure Positions

11.1 SAR Testing for Tablet

This device can be used also in full sized tablet exposure conditions, due to its size. Per FCC KDB 616217, the back surface and edges of the tablet should be tested for SAR compliance with the tablet touching the phantom. The SAR exclusion threshold in KDB 447498 D01v05r02 can be applied to determine SAR test exclusion for adjacent edge configurations. The closest distance from the antenna to an adjacent tablet edge is used to determine if SAR testing is required for the adjacent edges, with the adjacent edge positioned against the phantom and the edge containing the antenna positioned perpendicular to the phantom.

12. Conducted RF Output Power (Unit: dBm)

<GSM Conducted Power>

General Note:

1. Per KDB 447498 D01v05r02, the maximum output power channel is used for SAR testing and for further SAR test reduction.
2. For Body SAR testing was following KDB 941225 D03v01, the GPRS 3Tx slots modes was selected when EUT operating without power back-off, the GPRS 3Tx slots modes was selected when EUT operating with power back-off, according to the highest source-based time-averaged output power.

Band GSM850	Burst Average Power (dBm)			Tune-up Limit (dBm)	Frame-Average Power (dBm)			Tune-up Limit (dBm)
TX Channel	128	189	251		128	189	251	
Frequency (MHz)	824.2	836.4	848.8		824.2	836.4	848.8	
GPRS (GMSK, 1 Tx slot)	31.56	31.53	31.62	33.50	22.56	22.53	22.62	24.50
GPRS (GMSK, 2 Tx slots)	29.25	29.22	29.32	31.00	23.25	23.22	23.32	25.00
GPRS (GMSK, 3 Tx slots)	27.78	27.75	27.87	29.50	23.52	23.49	23.61	25.24
GPRS (GMSK, 4 Tx slots)	26.55	26.51	26.60	28.00	23.55	23.51	23.60	25.00
EDGE (8PSK, 1 Tx slot)	26.07	26.02	26.10	28.00	17.07	17.02	17.10	19.00
EDGE (8PSK, 2 Tx slots)	23.58	23.56	23.65	25.50	17.58	17.56	17.65	19.50
EDGE (8PSK, 3 Tx slots)	22.11	22.05	22.17	24.00	17.85	17.79	17.91	19.74
EDGE (8PSK, 4 Tx slots)	20.62	20.59	20.65	22.50	17.62	17.59	17.65	19.50

Band GSM1900	Burst Average Power (dBm)			Tune-up Limit (dBm)	Frame-Average Power (dBm)			Tune-up Limit (dBm)
TX Channel	512	661	810		512	661	810	
Frequency (MHz)	1850.2	1880	1909.8		1850.2	1880	1909.8	
GPRS (GMSK, 1 Tx slot)	28.80	28.53	28.54	30.50	19.80	19.53	19.54	21.50
GPRS (GMSK, 2 Tx slots)	26.32	26.02	26.01	28.00	20.32	20.02	20.01	22.00
GPRS (GMSK, 3 Tx slots)	24.78	24.55	24.52	26.50	20.52	20.29	20.26	22.24
GPRS (GMSK, 4 Tx slots)	23.31	23.05	23.00	25.00	20.31	20.05	20.00	22.00
EDGE (8PSK, 1 Tx slot)	25.00	24.75	24.66	27.00	16.00	15.75	15.66	18.00
EDGE (8PSK, 2 Tx slots)	22.70	22.46	22.37	24.50	16.70	16.46	16.37	18.50
EDGE (8PSK, 3 Tx slots)	21.05	21.00	20.88	23.00	16.79	16.74	16.62	18.74
EDGE (8PSK, 4 Tx slots)	19.48	19.55	19.38	21.50	16.48	16.55	16.38	18.50

<WCDMA Conducted Power>

The following tests were conducted according to the test requirements outlines in 3GPP TS 34.121 specification.

A summary of these settings are illustrated below:

HSDPA Setup Configuration:

a. The EUT was connected to Base Station Agilent E5515C referred to the Setup Configuration.
b. The RF path losses were compensated into the measurements.
c. A call was established between EUT and Base Station with following setting:
   i. Set Gain Factors (β_c and β_d) and parameters were set according to each
   ii. Specific sub-test in the following table, C10.1.4, quoted from the TS 34.121
   iii. Set RMC 12.2Kbps + HSDPA mode.
   iv. Set Cell Power = -86 dBm
   v. Set HS-DSCH Configuration Type to FRC (H-set 1, QPSK)
   vi. Select HSDPA Uplink Parameters
   vii. Set Delta ACK, Delta NACK and Delta CQI = 8
   viii. Set Ack-Nack Repetition Factor to 3
   ix. Set CQI Feedback Cycle (k) to 4 ms
   x. Set CQI Repetition Factor to 2
   xi. Power Ctrl Mode = All Up bits
d. The transmitted maximum output power was recorded.

Table C.10.1.4: β values for transmitter characteristics tests with HS-DPCCH

Sub-test	β_c	β_d	β_d (SF)	β_c/β_d	β_{HS} (Note1, Note 2)	CM (dB) (Note 3)	MPR (dB) (Note 3)
1	2/15	15/15	64	2/15	4/15	0.0	0.0
2	12/15 (Note 4)	15/15 (Note 4)	64	12/15 (Note 4)	24/15	1.0	0.0
3	15/15	8/15	64	15/8	30/15	1.5	0.5
4	15/15	4/15	64	15/4	30/15	1.5	0.5

Note 1: Δ_{ACK}, Δ_{NACK} and Δ_{CQI} = 30/15 with β_{hs} = 30/15 * β_c .

Note 2: For the HS-DPCCH power mask requirement test in clause 5.2C, 5.7A, and the Error Vector Magnitude (EVM) with HS-DPCCH test in clause 5.13.1A, and HSDPA EVM with phase discontinuity in clause 5.13.1AA, Δ_{ACK} and Δ_{NACK} = 30/15 with β_{hs} = 30/15 * β_c , and Δ_{CQI} = 24/15 with β_{hs} = 24/15 * β_c .

Note 3: CM = 1 for β_c/β_d =12/15, β_{hs}/β_c=24/15. For all other combinations of DPDCH, DPCCH and HS-DPCCH the MPR is based on the relative CM difference. This is applicable for only UEs that support HSDPA in release 6 and later releases.

Note 4: For subtest 2 the β_c/β_d ratio of 12/15 for the TFC during the measurement period (TF1, TF0) is achieved by setting the signalled gain factors for the reference TFC (TF1, TF1) to β_c = 11/15 and β_d = 15/15.

Setup Configuration

HSUPA Setup Configuration:

a. The EUT was connected to Base Station Agilent E5515C referred to the Setup Configuration.
b. The RF path losses were compensated into the measurements.
c. A call was established between EUT and Base Station with following setting * :
   i. Call Configs = 5.2B, 5.9B, 5.10B, and 5.13.2B with QPSK
   ii. Set the Gain Factors (β_c and β_d) and parameters (AG Index) were set according to each specific sub-test in the following table, C11.1.3, quoted from the TS 34.121
   iii. Set Cell Power = -86 dBm
   iv. Set Channel Type = 12.2k + HSPA
   v. Set UE Target Power
   vi. Power Ctrl Mode= Alternating bits
   vii. Set and observe the E-TFCI
   viii. Confirm that E-TFCI is equal to the target E-TFCI of 75 for sub-test 1, and other subtest's E-TFCI
d. The transmitted maximum output power was recorded.

Table C.11.1.3: β values for transmitter characteristics tests with HS-DPCCH and E-DCH

Sub-test	β_c	β_d	β_d (SF)	β_c/β_d	β_{HS} (Note1)	β_{ec}	β_{ed} (Note 5) (Note 6)	β_{ed} (SF)	β_{ed} (Codes)	CM (dB) (Note 2)	MPR (dB) (Note 2)	AG Index (Note 6)	E-TFCI
1	11/15 (Note 3)	15/15 (Note 3)	64	11/15 (Note 3)	22/15	209/225	1309/225	4	1	1.0	0.0	20	75
2	6/15	15/15	64	6/15	12/15	12/15	94/75	4	1	3.0	2.0	12	67
3	15/15	9/15	64	15/9	30/15	30/15	$\beta_{ed}1$: 47/15 $\beta_{ed}2$: 47/15	4 4	2	2.0	1.0	15	92
4	2/15	15/15	64	2/15	4/15	2/15	56/75	4	1	3.0	2.0	17	71
5	15/15 (Note 4)	15/15 (Note 4)	64	15/15 (Note 4)	30/15	24/15	134/15	4	1	1.0	0.0	21	81

Note 1: Δ_{ACK}, Δ_{NACK} and Δ_{CQI} = 30/15 with β_{hs} = 30/15 * β_c .
Note 2: CM = 1 for β_c/β_d =12/15, β_{hs}/β_c=24/15. For all other combinations of DPDCH, DPCCH, HS- DPCCH, E-DPDCH and E-DPCCH the MPR is based on the relative CM difference.
Note 3: For subtest 1 the β_c/β_d ratio of 11/15 for the TFC during the measurement period (TF1, TF0) is achieved by setting the signalled gain factors for the reference TFC (TF1, TF1) to β_c = 10/15 and β_d = 15/15.
Note 4: For subtest 5 the β_c/β_d ratio of 15/15 for the TFC during the measurement period (TF1, TF0) is achieved by setting the signalled gain factors for the reference TFC (TF1, TF1) to β_c = 14/15 and β_d = 15/15.
Note 5: In case of testing by UE using E-DPDCH Physical Layer category 1, Sub-test 3 is omitted according to TS25.306 Table 5.1g.
Note 6: β_{ed} can not be set directly, it is set by Absolute Grant Value.

Setup Configuration

<WCDMA Conducted Power>

General Note:

1. Per KDB 941225 D02v02r02, RMC 12.2kbps setting is used to evaluate SAR. If HSDPA/HSUPA output power is < 0.25dB higher than RMC, or reported SAR with RMC 12.2kbps setting is ≤ 1.2W/kg, HSDPA/HSUPA SAR evaluation can be excluded..

Band			WCDMA V			WCDMA II			WCDMA IV		
TX Channel			4132	4182	4233	9262	9400	9538	1312	1413	1513
Rx Channel			4357	4407	4458	9662	9800	9938	1537	1638	1738
Frequency (MHz)			826.4	836.4	846.6	1852.4	1880	1907.6	1712.4	1732.6	1752.6
MPR (dB)	3GPP Rel 99	RMC 12.2Kbps	22.91	22.53	22.55	23.06	22.97	22.51	23.10	22.69	22.59
0	3GPP Rel 6	HSDPA Subtest-1	22.62	22.30	22.33	22.83	22.76	22.24	22.82	22.40	22.18
0	3GPP Rel 6	HSDPA Subtest-2	21.92	21.62	21.64	22.17	22.09	21.63	22.12	21.76	21.54
0.5	3GPP Rel 6	HSDPA Subtest-3	21.69	21.36	21.29	21.78	21.73	21.25	21.86	21.47	21.38
0.5	3GPP Rel 6	HSDPA Subtest-4	21.49	21.11	21.15	21.64	21.63	21.12	21.66	21.23	21.09
0	3GPP Rel 6	HSUPA Subtest-1	21.88	21.55	21.61	22.11	22.02	21.55	22.12	21.62	21.49
2	3GPP Rel 6	HSUPA Subtest-2	19.87	19.58	19.63	20.09	20.01	19.49	20.16	19.68	19.50
1	3GPP Rel 6	HSUPA Subtest-3	20.61	20.35	20.41	20.85	20.85	20.31	20.96	20.42	20.23
2	3GPP Rel 6	HSUPA Subtest-4	20.15	19.95	19.96	20.37	20.34	19.85	20.42	19.96	19.78
0	3GPP Rel 6	HSUPA Subtest-5	21.91	21.65	21.68	22.13	22.07	21.56	22.17	21.68	21.51

13. Antenna Location

<Tablet Mode>

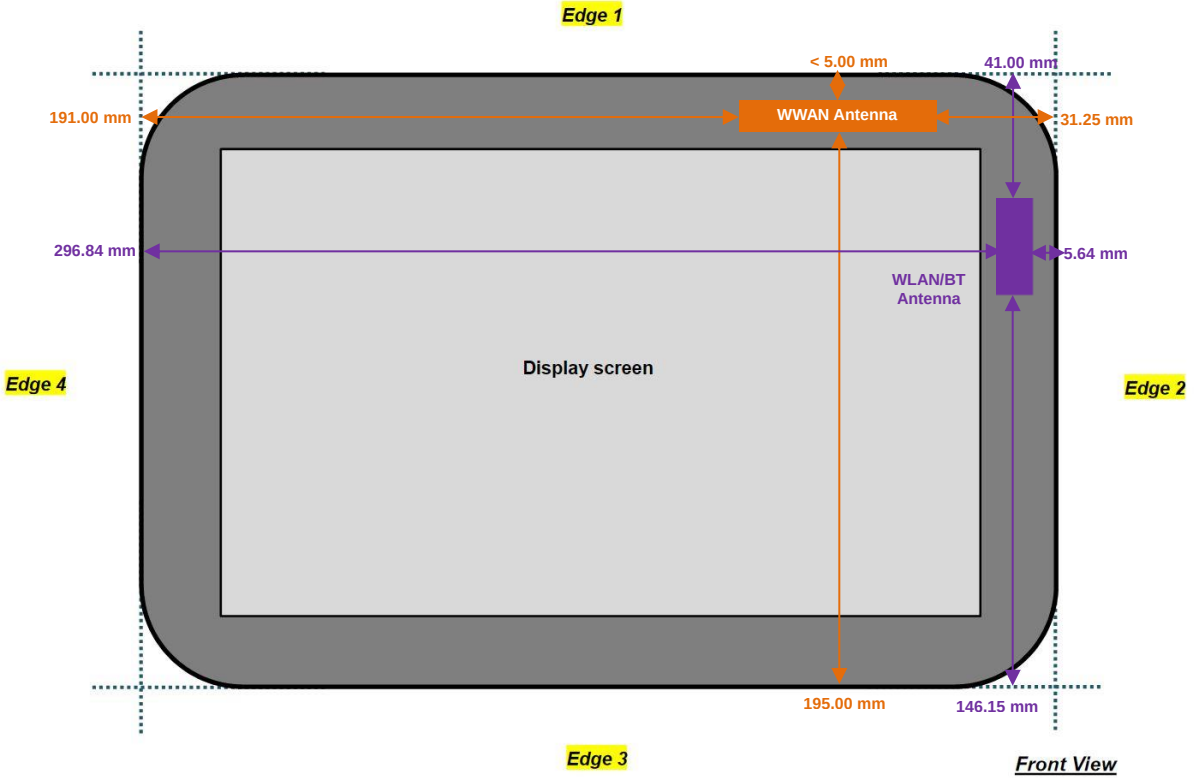

<Laptop Mode>

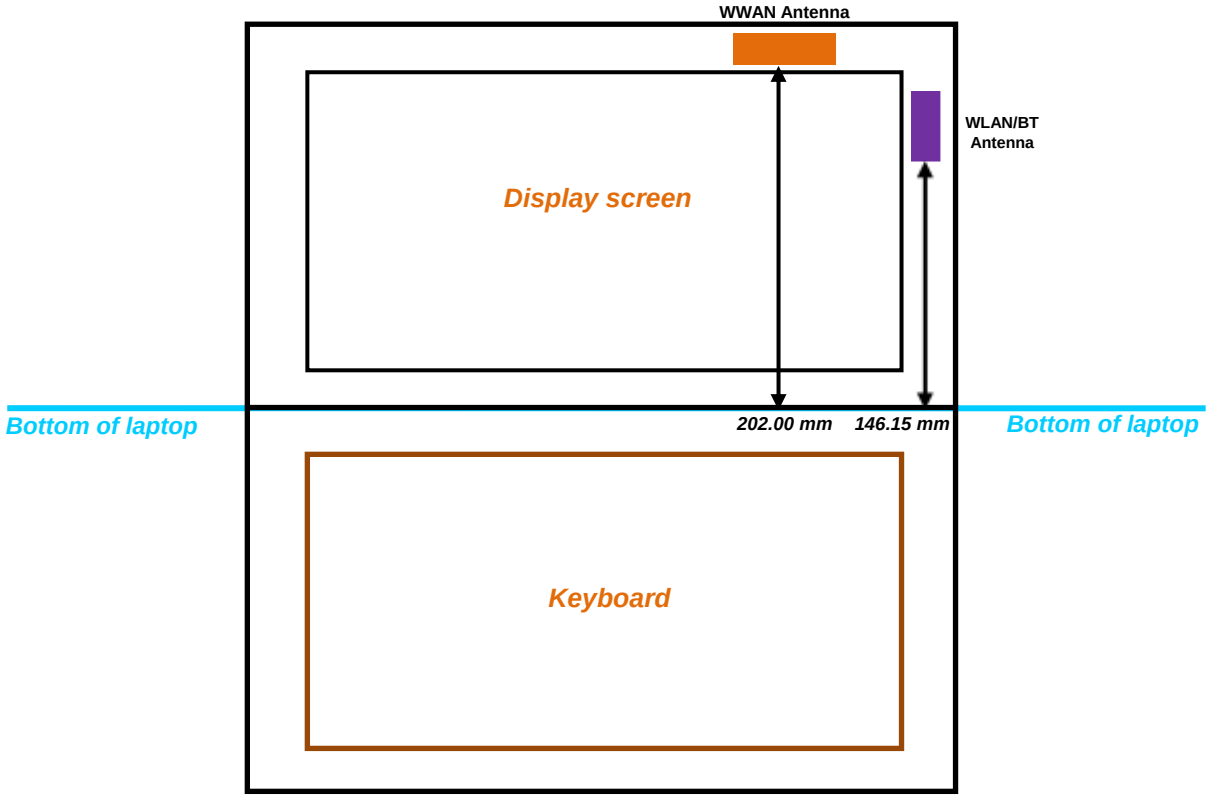
WWAN Antenna
WLAN/BT Antenna
Display screen
Bottom of laptop
202.00 mm
146.15 mm
Bottom of laptop
Keyboard

<SAR test exclusion table>

General Note:

1. Above the table, when the distance is < 50 mm exclusion threshold is "Ratio", when the distance is > 50 mm exclusion threshold is "mW"
2. Maximum power is the source-based time-average power and represents the maximum RF output power among production units
3. Per KDB 447498 D01v05r02, for larger devices, the test separation distance of adjacent edge configuration is determined by the closest separation between the antenna and the user.
4. Per KDB 447498 D01v05r02, standalone SAR test exclusion threshold is applied; If the test separation distance is < 5mm, 5mm is used to determine SAR exclusion threshold.
5. Per KDB 447498 D01v05r02, the 1-g and 10-g SAR test exclusion thresholds for 100 MHz to 6 GHz at *test separation distances* ≤ 50 mm are determined by:
   [(*max. power of channel, including tune-up tolerance, mW*)/(*min. test separation distance, mm*)] ·[$\sqrt{f(GHz)}$] ≤ 3.0 for 1-g SAR and ≤ 7.5 for 10-g extremity SAR
   - f(GHz) is the RF channel transmit frequency in GHz
   - Power and distance are rounded to the nearest mW and mm before calculation
   - The result is rounded to one decimal place for comparison
6. Per KDB 447498 D01v05r02, at 100 MHz to 6 GHz and for *test separation distances* > 50 mm, the SAR test exclusion threshold is determined according to the following
   a) [Threshold at 50 mm in step 1) + (test separation distance - 50 mm)·(f(MHz)/150)] mW, at 100 MHz to 1500 MHz
   b) [Threshold at 50 mm in step 1) + (test separation distance - 50 mm)·10] mW at > 1500 MHz and ≤ 6 GHz

Exposure Position	Wireless Interface	GPRS 850 Class 12	GPRS 1900 Class 11	WCDMA Band V	WCDMA Band IV	WCDMA Band II
	Calculated Frequency	848MHz	1909MHz	846MHz	1750MHz	1907MHz
	Maximum power (dBm)	25.24	22.24	24.5	24.5	24.5
	Maximum rated power(mW)	334	167	282	282	282
Bottom Face	Separation distance(mm)	5				
	exclusion threshold	62	46	52	75	78
	Testing required?	Yes	Yes	Yes	Yes	Yes
Edge 1	Separation distance(mm)	5				
	exclusion threshold	62	46	52	75	78
	Testing required?	Yes	Yes	Yes	Yes	Yes
Edge 2	Separation distance(mm)	31.25				
	exclusion threshold	10	7	8	12	12
	Testing required?	Yes	Yes	Yes	Yes	Yes
Edge 3	Separation distance(mm)	195				
	exclusion threshold	983	1559	981	1563	1559
	Testing required?	No	No	No	No	No
Edge 4	Separation distance(mm)	191				
	exclusion threshold	960	1519	958	1523	1519
	Testing required?	No	No	No	No	No
Bottom of Laptop	Separation distance(mm)	202				
	exclusion threshold	1022	1629	1020	1633	1629
	Testing required?	No	No	No	No	No

14. SAR Test Results

General Note:

1. Per KDB 447498 D01v05r02, the reported SAR is the measured SAR value adjusted for maximum tune-up tolerance.
   a. Tune-up scaling Factor = tune-up limit power (mW) / EUT RF power (mW), where tune-up limit is the maximum rated power among all production units.
   b. For WWAN: Reported SAR(W/kg)= Measured SAR(W/kg)*Tune-up Scaling Factor
2. Per KDB 447498 D01v05r02, for each exposure position, testing of other required channels within the operating mode of a frequency band is not required when the *reported* 1-g or 10-g SAR for the mid-band or highest output power channel is:
   - ≤ 0.8 W/kg or 2.0 W/kg, for 1-g or 10-g respectively, when the transmission band is ≤ 100 MHz
   - ≤ 0.6 W/kg or 1.5 W/kg, for 1-g or 10-g respectively, when the transmission band is between 100 MHz and 200 MHz
   - ≤ 0.4 W/kg or 1.0 W/kg, for 1-g or 10-g respectively, when the transmission band is ≥ 200 MHz

14.1 Body SAR

<GSM SAR>

Plot No.	Band	Mode	Test Position	Gap (cm)	Ch.	Freq. (MHz)	Average Power (dBm)	Tune-Up Limit (dBm)	Tune-up Scaling Factor	Power Drift (dB)	Measured 1g SAR (W/kg)	Reported 1g SAR (W/kg)
	GSM850	GPRS (3 Tx slots)	Bottom Face	0cm	251	848.8	27.87	29.50	1.455	0.07	0.075	0.109
01	GSM850	GPRS (3 Tx slots)	Edge 1	0cm	251	848.8	27.87	29.50	1.455	0.12	0.378	**0.550**
	GSM850	GPRS (3 Tx slots)	Edge 1	0cm	128	824.2	27.78	29.50	1.486	0.01	0.336	0.499
	GSM850	GPRS (3 Tx slots)	Edge 1	0cm	189	836.4	27.75	29.50	1.496	-0.06	0.367	0.549
	GSM850	GPRS (3 Tx slots)	Edge 2	0cm	251	848.8	27.87	29.50	1.455	0.17	0.106	0.154
	GSM1900	GPRS (3 Tx slots)	Bottom Face	0cm	512	1850.2	24.78	26.50	1.486	-0.07	0.086	0.128
02	GSM1900	GPRS (3 Tx slots)	Edge 1	0cm	512	1850.2	24.78	26.50	1.486	0.03	0.339	**0.504**
	GSM1900	GPRS (3 Tx slots)	Edge 1	0cm	661	1880	24.55	26.50	1.567	-0.06	0.285	0.447
	GSM1900	GPRS (3 Tx slots)	Edge 1	0cm	810	1909.8	24.52	26.50	1.578	0.03	0.282	0.445
	GSM1900	GPRS (3 Tx slots)	Edge 2	0cm	512	1850.2	24.78	26.50	1.486	-0.1	0.092	0.137

<WCDMA SAR>

Plot No.	Band	Mode	Test Position	Gap (cm)	Ch.	Freq. (MHz)	Average Power (dBm)	Tune-Up Limit (dBm)	Tune-up Scaling Factor	Power Drift (dB)	Measured 1g SAR (W/kg)	Reported 1g SAR (W/kg)
	WCDMA V	RMC 12.2Kbps	Bottom Face	0cm	4132	826.4	22.91	24.50	1.442	-0.14	0.052	0.075
	WCDMA V	RMC 12.2Kbps	Edge 1	0cm	4132	826.4	22.91	24.50	1.442	-0.11	0.377	0.544
	WCDMA V	RMC 12.2Kbps	Edge 1	0cm	4182	836.4	22.53	24.50	1.574	0.04	0.342	0.538
03	WCDMA V	RMC 12.2Kbps	Edge 1	0cm	4233	846.6	22.55	24.50	1.567	0.1	0.349	**0.547**
	WCDMA V	RMC 12.2Kbps	Edge 2	0cm	4132	826.4	22.91	24.50	1.442	-0.08	0.148	0.213
	WCDMA IV	RMC 12.2Kbps	Bottom Face	0cm	1312	1712.4	23.10	24.50	1.380	0.03	0.206	0.284
04	WCDMA IV	RMC 12.2Kbps	Edge 1	0cm	1312	1712.4	23.10	24.50	1.380	-0.03	0.977	**1.349**
	WCDMA IV	RMC 12.2Kbps	Edge 1	0cm	1413	1732.6	22.69	24.50	1.517	-0.01	0.862	1.308
	WCDMA IV	RMC 12.2Kbps	Edge 1	0cm	1513	1752.6	22.59	24.50	1.552	0.05	0.834	1.295
	WCDMA IV	RMC 12.2Kbps	Edge 2	0cm	1312	1712.4	23.10	24.50	1.380	-0.12	0.208	0.287
	WCDMA II	RMC 12.2Kbps	Bottom Face	0cm	9262	1852.4	23.06	24.50	1.393	-0.11	0.176	0.245
05	WCDMA II	RMC 12.2Kbps	Edge 1	0cm	9262	1852.4	23.06	24.50	1.393	-0.14	0.619	**0.862**
	WCDMA II	RMC 12.2Kbps	Edge 1	0cm	9400	1880	22.97	24.50	1.422	-0.04	0.562	0.799
	WCDMA II	RMC 12.2Kbps	Edge 1	0cm	9538	1907.6	22.51	24.50	1.581	0	0.434	0.686
	WCDMA II	RMC 12.2Kbps	Edge 2	0cm	9262	1852.4	23.06	24.50	1.393	0	0.182	0.254

14.2 Repeated SAR Measurement

No.	Band	Mode	Test Position	Gap (cm)	Ch.	Freq. (MHz)	Average Power (dBm)	Tune-Up Limit (dBm)	Tune-up Scaling Factor	Power Drift (dB)	Measured 1g SAR (W/kg)	Ratio	Reported 1g SAR (W/kg)
1st	WCDMA IV	RMC 12.2Kbps	Edge 1	0cm	1312	1712.4	23.1	24.5	1.380	-0.03	0.977	-	1.349
2nd	WCDMA IV	RMC 12.2Kbps	Edge 1	0cm	1312	1712.4	23.1	24.5	1.380	-0.01	0.971	1.006	1.340

General Note:

1. Per KDB 865664 D01v01r03, for each frequency band, repeated SAR measurement is required only when the measured SAR is ≥0.8W/kg
2. Per KDB 865664 D01v01r03, if the ratio among the repeated measurement is ≤ 1.2 and the measured SAR <1.45W/kg, only one repeated measurement is required.
3. The ratio is the difference in percentage between original and repeated *measured SAR*.
4. All measurement SAR result is scaled-up to account for tune-up tolerance and is compliant.

15. Simultaneous Transmission Analysis

NO.	Simultaneous Transmission Configurations	Portable Device	Note
		Body	
1.	GPRS/EDGE(Data) + WLAN2.4GHz(data)	Yes	2.4GHz Hotspot
2.	WCDMA(Data) + WLAN2.4GHz(data)	Yes	2.4GHz Hotspot
3.	GPRS/EDGE(Data) + Bluetooth(data)	Yes	
4.	WCDMA(Data) + Bluetooth(data)	Yes	

General Note:

1. For co-location analysis:
   i) For WWAN SAR testing was performed on bottom face, Edge1 and Edge2, according to KDB 447498 D01v05r02 exclusion thresholds which can be referred to page26.
   ii) For Realtek RTL8188EE WLAN SAR testing was performed on bottom face, Edge1 and Edge2, according to KDB 447498 D01v05r02 exclusion thresholds which can be referred to Sporton FCC SAR Report, FCC ID: TX2-RTL8188EE, Report No: FA3D1372 Rev.01 page26.
   iii) For Qualcomm Atheros QCWB335 WLAN SAR testing was performed on bottom face and Edge2, according to KDB 447498 D01v05r02 exclusion thresholds which can be referred to Sporton FCC SAR Report, FCC ID: PPD-QCWB335, Report No: FA3D1372-01 Rev.02 page26.
   iv) For Qualcomm Atheros AR5B125 WLAN SAR testing was performed on bottom face and Edge2, according to KDB 447498 D01v05r02 exclusion thresholds which can be referred to Sporton FCC SAR Report, FCC ID: PPD-AR5B125, Report No: FA3D1372-02 Rev.02 page26.
   v) For Ralink RT3290 WLAN SAR testing was performed on bottom face and Edge2, according to KDB 447498 D01v05r02 exclusion thresholds which can be referred to Sporton FCC SAR Report, FCC ID: VFQ-RT3290, Report No: FA3D1372-03 Rev.02 page26.
   vi) For co-location analysis was performed at the same exposure positions, which are bottom face, Edge1 and Edge2, where both WWAN standalone SAR and WLAN standalone SAR was assessed.
2. The Scaled SAR summation is calculated based on the same configuration and test position.
3. Per KDB 447498 D01v05r02, simultaneous transmission SAR is compliant if,
   i) Scalar SAR summation < 1.6W/kg.
   ii) SPLSR = (SAR1 + SAR2)^1.5 / (min. separation distance, mm), and the peak separation distance is determined from the square root of [(x1-x2)2 + (y1-y2)2 + (z1-z2)2], where (x1, y1, z1) and (x2, y2, z2) are the coordinates of the extrapolated peak SAR locations in the zoom scan.
   iii) If SPLSR ≤ 0.04, simultaneously transmission SAR measurement is not necessary.
   iv) Simultaneously transmission SAR measurement, and the reported multi-band SAR < 1.6W/kg.
4. For simultaneous transmission analysis, Bluetooth SAR is estimated per KDB 447498 D01v05r02 based on the formula below.
   i) (*max. power of channel, including tune-up tolerance, mW*)/(*min. test separation distance, mm*)]·[$\sqrt{f(GHz)/x}$] W/kg for *test separation distances* ≤ 50 mm; where *x* = 7.5 for 1-g SAR, and *x* = 18.75 for 10-g SAR.
   ii) When the minimum separation distance is < 5mm, the distance is used 5mm to determine SAR test exclusion.
   iii) 0.4 W/kg for 1-g SAR and 1.0 W/kg for 10-g SAR, when the *test separation distances* is > 50 mm.

Qualcomm Atheros QCWB335					
Separation Distance		< 5mm	41 mm	5.64mm	25mm
Bluetooth Max Power	Exposure Position	Bottom Face	Edge1	Edge2	Back of Display Screen
9.1 dBm	Estimated SAR (W/kg)	0.336 W/kg	0.041 W/kg	0.336 W/kg	0.067

Ralink RT3290					
Separation Distance		< 5mm	41 mm	5.64mm	25mm
Bluetooth Max Power	Exposure Position	Bottom Face	Edge1	Edge2	Back of Display Screen
8.0 dBm	Estimated SAR (W/kg)	0.252 W/kg	0.031 W/kg	0.0.223 W/kg	0.050

15.1 Body Exposure Conditions

<WWAN with Realtek RTL8188EE>

WWAN Band		Exposure Position	WWAN SAR (W/kg)	2.4GHz WLAN SAR (W/kg)	Summed SAR (W/kg)
GSM	GSM850	Bottom Face at 0cm	0.109	0.131	**0.24**
		Edge1 at 0cm	0.550	0.018	**0.57**
		Edge2 at 0cm	0.154	0.767	**0.92**
	GSM1900	Bottom Face at 0cm	0.128	0.131	**0.26**
		Edge1 at 0cm	0.504	0.018	**0.52**
		Edge2 at 0cm	0.137	0.767	**0.90**
WCMDA	Band V	Bottom Face at 0cm	0.075	0.131	**0.21**
		Edge1 at 0cm	0.547	0.018	**0.57**
		Edge2 at 0cm	0.213	0.767	**0.98**
	Band IV	Bottom Face at 0cm	0.284	0.131	**0.42**
		Edge1 at 0cm	1.349	0.018	**1.37**
		Edge2 at 0cm	0.287	0.767	**1.05**
	Band II	Bottom Face at 0cm	0.245	0.131	**0.38**
		Edge1 at 0cm	0.862	0.018	**0.88**
		Edge2 at 0cm	0.254	0.767	**1.02**

<WWAN with Qualcomm Atheros QCWB335>

WWAN Band		Exposure Position	1 WWAN SAR (W/kg)	2 2.4GHz WLAN SAR (W/kg)	3 2.4GHz Bluetooth Estimated SAR (W/kg)	1+2 Summed SAR (W/kg)	1+3 Summed SAR (W/kg)
GSM	GSM850	Bottom Face at 0cm	0.109	0.097	0.336	**0.21**	**0.45**
		Edge1 at 0cm	0.550		0.041	**0.55**	**0.59**
		Edge2 at 0cm	0.154	1.043	0.298	**1.20**	**0.45**
	GSM1900	Bottom Face at 0cm	0.128	0.097	0.336	**0.23**	**0.46**
		Edge1 at 0cm	0.504		0.041	**0.50**	**0.55**
		Edge2 at 0cm	0.137	1.043	0.298	**1.18**	**0.44**
WCMDA	Band V	Bottom Face at 0cm	0.075	0.097	0.336	**0.17**	**0.41**
		Edge1 at 0cm	0.547		0.041	**0.55**	**0.59**
		Edge2 at 0cm	0.213	1.043	0.298	**1.26**	**0.51**
	Band IV	Bottom Face at 0cm	0.284	0.097	0.336	**0.38**	**0.62**
		Edge1 at 0cm	1.349		0.041	**1.35**	**1.39**
		Edge2 at 0cm	0.287	1.043	0.298	**1.33**	**0.59**
	Band II	Bottom Face at 0cm	0.245	0.097	0.336	**0.34**	**0.58**
		Edge1 at 0cm	0.862		0.041	**0.86**	**0.90**
		Edge2 at 0cm	0.254	1.043	0.298	**1.30**	**0.55**

<WWAN with Atheros AR5B125>

WWAN Band		Exposure Position	WWAN SAR (W/kg)	2.4GHz WLAN SAR (W/kg)	Summed SAR (W/kg)
GSM	GSM850	Bottom Face at 0cm	0.109	0.068	**0.18**
		Edge1 at 0cm	0.550		**0.55**
		Edge2 at 0cm	0.154	0.867	**1.02**
		Back of Display Screen	0.259		**0.26**
	GSM1900	Bottom Face at 0cm	0.128	0.068	**0.20**
		Edge1 at 0cm	0.504		**0.50**
		Edge2 at 0cm	0.137	0.867	**1.00**
		Back of Display Screen	0.178		**0.18**
WCMDA	Band V	Bottom Face at 0cm	0.075	0.068	**0.14**
		Edge1 at 0cm	0.547		**0.55**
		Edge2 at 0cm	0.213	0.867	**1.08**
		Back of Display Screen	0.316		**0.32**
	Band IV	Bottom Face at 0cm	0.284	0.068	**0.35**
		Edge1 at 0cm	1.349		**1.35**
		Edge2 at 0cm	0.287	0.867	**1.15**
		Back of Display Screen	0.428		**0.43**
	Band II	Bottom Face at 0cm	0.245	0.068	**0.31**
		Edge1 at 0cm	0.862		**0.86**
		Edge2 at 0cm	0.254	0.867	**1.12**
		Back of Display Screen	0.383		**0.38**

<WWAN with Ralink RT3290>

WWAN Band		Exposure Position	1 WWAN SAR (W/kg)	2 2.4GHz WLAN SAR (W/kg)	3 2.4GHz Bluetooth Estimated SAR (W/kg)	1+2 Summed SAR (W/kg)	1+3 Summed SAR (W/kg)
GSM	GSM850	Bottom Face at 0cm	0.109	0.065	0.252	**0.17**	**0.36**
		Edge1 at 0cm	0.550		0.031	**0.55**	**0.58**
		Edge2 at 0cm	0.154	0.651	0.223	**0.81**	**0.38**
	GSM1900	Bottom Face at 0cm	0.128	0.065	0.252	**0.19**	**0.38**
		Edge1 at 0cm	0.504		0.031	**0.50**	**0.54**
		Edge2 at 0cm	0.137	0.651	0.223	**0.79**	**0.36**
WCMDA	Band V	Bottom Face at 0cm	0.075	0.065	0.252	**0.14**	**0.33**
		Edge1 at 0cm	0.547		0.031	**0.55**	**0.58**
		Edge2 at 0cm	0.213	0.651	0.223	**0.86**	**0.44**
	Band IV	Bottom Face at 0cm	0.284	0.065	0.252	**0.35**	**0.54**
		Edge1 at 0cm	1.349		0.031	**1.35**	**1.38**
		Edge2 at 0cm	0.287	0.651	0.223	**0.94**	**0.51**
	Band II	Bottom Face at 0cm	0.245	0.065	0.252	**0.31**	**0.50**
		Edge1 at 0cm	0.862		0.031	**0.86**	**0.89**
		Edge2 at 0cm	0.254	0.651	0.223	**0.91**	**0.48**

Test Engineer： Bevis Chang, Angelo Chang and Tom Jiang

16. Uncertainty Assessment

The component of uncertainly may generally be categorized according to the methods used to evaluate them. The evaluation of uncertainly by the statistical analysis of a series of observations is termed a Type An evaluation of uncertainty. The evaluation of uncertainty by means other than the statistical analysis of a series of observation is termed a Type B evaluation of uncertainty. Each component of uncertainty, however evaluated, is represented by an estimated standard deviation, termed standard uncertainty, which is determined by the positive square root of the estimated variance.

A Type A evaluation of standard uncertainty may be based on any valid statistical method for treating data. This includes calculating the standard deviation of the mean of a series of independent observations; using the method of least squares to fit a curve to the data in order to estimate the parameter of the curve and their standard deviations; or carrying out an analysis of variance in order to identify and quantify random effects in certain kinds of measurement.

A type B evaluation of standard uncertainty is typically based on scientific judgment using all of the relevant information available. These may include previous measurement data, experience, and knowledge of the behavior and properties of relevant materials and instruments, manufacture's specification, data provided in calibration reports and uncertainties assigned to reference data taken from handbooks. Broadly speaking, the uncertainty is either obtained from an outdoor source or obtained from an assumed distribution, such as the normal distribution, rectangular or triangular distributions indicated in table below.

Uncertainty Distributions	Normal	Rectangular	Triangular	U-Shape
Multi-plying Factor[(a)]	1/k[(b)]	1/√3	1/√6	1/√2

(a) standard uncertainty is determined as the product of the multiplying factor and the estimated range of variations in the measured quantity

(b) κ is the coverage factor

Table 16.1. Standard Uncertainty for Assumed Distribution

The combined standard uncertainty of the measurement result represents the estimated standard deviation of the result. It is obtained by combining the individual standard uncertainties of both Type A and Type B evaluation using the usual "root-sum-squares" (RSS) methods of combining standard deviations by taking the positive square root of the estimated variances.

Expanded uncertainty is a measure of uncertainty that defines an interval about the measurement result within which the measured value is confidently believed to lie. It is obtained by multiplying the combined standard uncertainty by a coverage factor. Typically, the coverage factor ranges from 2 to 3. Using a coverage factor allows the true value of a measured quantity to be specified with a defined probability within the specified uncertainty range. For purpose of this document, a coverage factor two is used, which corresponds to confidence interval of about 95 %. The DASY uncertainty Budget is shown in the following tables.

Error Description	Uncertainty Value (±%)	Probability Distribution	Divisor	Ci (1g)	Ci (10g)	Standard Uncertainty (1g)	Standard Uncertainty (10g)
Measurement System							
Probe Calibration	6.0	Normal	1	1	1	± 6.0 %	± 6.0 %
Axial Isotropy	4.7	Rectangular	√3	0.7	0.7	± 1.9 %	± 1.9 %
Hemispherical Isotropy	9.6	Rectangular	√3	0.7	0.7	± 3.9 %	± 3.9 %
Boundary Effects	1.0	Rectangular	√3	1	1	± 0.6 %	± 0.6 %
Linearity	4.7	Rectangular	√3	1	1	± 2.7 %	± 2.7 %
System Detection Limits	1.0	Rectangular	√3	1	1	± 0.6 %	± 0.6 %
Readout Electronics	0.3	Normal	1	1	1	± 0.3 %	± 0.3 %
Response Time	0.8	Rectangular	√3	1	1	± 0.5 %	± 0.5 %
Integration Time	2.6	Rectangular	√3	1	1	± 1.5 %	± 1.5 %
RF Ambient Noise	3.0	Rectangular	√3	1	1	± 1.7 %	± 1.7 %
RF Ambient Reflections	3.0	Rectangular	√3	1	1	± 1.7 %	± 1.7 %
Probe Positioner	0.4	Rectangular	√3	1	1	± 0.2 %	± 0.2 %
Probe Positioning	2.9	Rectangular	√3	1	1	± 1.7 %	± 1.7 %
Max. SAR Eval.	1.0	Rectangular	√3	1	1	± 0.6 %	± 0.6 %
Test Sample Related							
Device Positioning	2.9	Normal	1	1	1	± 2.9 %	± 2.9 %
Device Holder	3.6	Normal	1	1	1	± 3.6 %	± 3.6 %
Power Drift	5.0	Rectangular	√3	1	1	± 2.9 %	± 2.9 %
Phantom and Setup							
Phantom Uncertainty	4.0	Rectangular	√3	1	1	± 2.3 %	± 2.3 %
Liquid Conductivity (Target)	5.0	Rectangular	√3	0.64	0.43	± 1.8 %	± 1.2 %
Liquid Conductivity (Meas.)	2.5	Normal	1	0.64	0.43	± 1.6 %	± 1.1 %
Liquid Permittivity (Target)	5.0	Rectangular	√3	0.6	0.49	± 1.7 %	± 1.4 %
Liquid Permittivity (Meas.)	2.5	Normal	1	0.6	0.49	± 1.5 %	± 1.2 %
Combined Standard Uncertainty						± 11.0 %	± 10.8 %
Coverage Factor for 95 %						K=2	
Expanded Uncertainty						**± 22.0 %**	**± 21.5 %**

Table 16.2.Uncertainty Budget for frequency range 300 MHz to 3 GHz

17. References

[1] FCC 47 CFR Part 2 “Frequency Allocations and Radio Treaty Matters; General Rules and Regulations”

[2] ANSI/IEEE Std. C95.1-1992, “IEEE Standard for Safety Levels with Respect to Human Exposure to Radio Frequency Electromagnetic Fields, 3 kHz to 300 GHz”, September 1992

[3] IEEE Std. 1528-2003, “Recommended Practice for Determining the Peak Spatial-Average Specific Absorption Rate (SAR) in the Human Head from Wireless Communications Devices: Measurement Techniques”, December 2003

[4] SPEAG DASY System Handbook

[5] FCC KDB 447498 D01 v05r02, “Mobile and Portable Device RF Exposure Procedures and Equipment Authorization Policies”, Feb 2014

[6] FCC KDB 616217 D04 v01r01, “SAR Evaluation Considerations for Laptop, Notebook, Netbook and Tablet Computers”, May 2013

[7] FCC KDB 941225 D01 v02, “SAR Measurement Procedures for 3G Devices – CDMA 2000 / Ev-Do / WCDMA / HSDPA / HSPA”, October 2007

[8] FCC KDB 941225 D02 v02r02, “SAR Guidance for HSPA, HSPA+, DC-HSDPA and 1x-Advanced”, May 2013.

[9] FCC KDB 941225 D03 v01, “Recommended SAR Test Reduction Procedures for GSM / GPRS / EDGE”, December 2008

[10] FCC KDB 865664 D01 v01r03, "SAR Measurement Requirements for 100 MHz to 6 GHz", Feb 2014.

[11] FCC KDB 865664 D02 v01r01, “RF Exposure Compliance Reporting and Documentation Considerations” May 2013.