User Guide

RMN:HSN-I07C

© Copyright 2014 Hewlett-Packard Development Company, L.P.

Bluetooth is a trademark owned by its proprietor and used by Hewlett-Packard Company under license. Intel is a trademark of Intel Corporation in the U.S. and other countries. Microsoft and Windows are U.S. registered trademarks of the Microsoft group of companies.

The information contained herein is subject to change without notice. The only warranties for HP products and services are set forth in the express warranty statements accompanying such products and services. Nothing herein should be construed as constituting an additional warranty. HP shall not be liable for technical or editorial errors or omissions contained herein.

First Edition: August 2014

Document Part Number: 765879-001

Product notice

This guide describes features that are common to most models. Some features may not be available on your computer.

Not all features are available in all editions of Windows. This computer may require upgraded and/or separately purchased hardware, drivers and/or software to take full advantage of Windows functionality. Go to http://www.microsoft.com for details.

To access the latest user guide, go to http://www.hp.com/support, and select your country. Select **Drivers & Downloads**, and then follow the on-screen instructions.

Software terms

By installing, copying, downloading, or otherwise using any software product preinstalled on this computer, you agree to be bound by the terms of the HP End User License Agreement (EULA). If you do not accept these license terms, your sole remedy is to return the entire unused product (hardware and software) within 14 days for a full refund, subject to the refund policy of your seller.

For any further information or to request a full refund of the price of the computer, please contact your seller.

Safety warning notice

⚠ **WARNING!** To reduce the possibility of heat-related injuries or of overheating the computer, do not place the computer directly on your lap or obstruct the computer air vents. Use the computer only on a hard, flat surface. Do not allow another hard surface, such as an adjoining optional printer, or a soft surface, such as pillows or rugs or clothing, to block airflow. Also, do not allow the AC adapter to come into contact with the skin or a soft surface, such as pillows or rugs or clothing, during operation. The computer and the AC adapter comply with the user-accessible surface temperature limits defined by the International Standard for Safety of Information Technology Equipment (IEC 60950).

Processor configuration setting (select models only)

IMPORTANT: Select computer models are configured with an Intel® Atom® E3800 processor and a Windows® operating system. On these models, do not change the processor configuration setting in msconfig.exe from 4 or 2 processors to 1 processor. If you do so, your computer will not restart. You will have to perform a factory reset to restore the original settings.

Table of contents

1 Starting right 1
Visit the HP Apps Store 1
Best practices 1
More HP resources 2

2 Getting to know your computer 4
Locating hardware 4
Locating software 4
Identifying components 5
Using the action keys 11
Labels 12

3 Connecting to a network 14
Connecting to a wireless network 14
Using the wireless controls 14
Wireless button 14
Operating system controls 15
Connecting to a WLAN 15
Using HP Mobile Broadband (select models only) 16
Using Bluetooth wireless devices (select models only) 16
Connecting to a wired network—LAN (select models only) 16
Sharing data and drives and accessing software 17
Sharing media and data across your home group network (select models only) 17

4 Enjoying entertainment features 19
Using a webcam (select models only) 19
Using audio 19
Connecting speakers 19
Connecting headphones 19
Connecting a microphone 20
Connecting headsets 20
Using Beats Audio (select models only) 20
Accessing Beats Audio Control Panel 20
Enabling and disabling Beats Audio 20
Using video 20
Connecting video devices by using a VGA cable (select models only) 21

Connecting video devices using an HDMI cable (select models only) 21
Setting up HDMI audio 22
Connecting digital display devices using a DisplayPort cable (select models only) 23
Connecting Miracast-compatible wireless displays (select models only) 24

5 Navigating the screen 25
Using the TouchPad and touch screen gestures 25
Tap 25
Two-finger scroll 25
Two-finger pinch zoom 26
Two-finger click 26
Right-edge swipe 26
Left-edge swipe 27
Top-edge swipe and bottom-edge swipe 27
One-finger slide (touch screen only) 27
Using a keyboard and optional mouse 28

6 Managing power 29
Initiating and exiting Sleep and Hibernation 29
Manually initiating and exiting Sleep 30
Manually initiating and exiting Hibernation (select models only) 30
Setting password protection on wakeup (exiting Sleep or Hibernation) 30
Using the power meter and power settings 31
Running on battery power 31
Factory-sealed battery (select models only) 31
User-replaceable battery (select models only) 32
Finding battery information 32
Conserving battery power 33
Resolving a low battery level 33
Resolving a low battery level when external power is available 33
Resolving a low battery level when no power source is available 33
Resolving a low battery level when the computer cannot exit Hibernation 33
Storing a user-replaceable battery (select models only) 33
Disposing of a user-replaceable battery (select models only) 34
Running on AC power 34
Troubleshooting power problems 35
Shutting down (turning off) the computer 35

7 Maintaining your computer 37
Improving performance 37

Using Disk Defragmenter 37
Using Disk Cleanup 37
Updating programs and drivers 37
Cleaning your computer 38
Cleaning procedures 38
Cleaning the display 38
Cleaning the sides or cover 39
Cleaning the TouchPad, keyboard, or mouse (select models only) 39
Traveling with or shipping your computer 39

8 Securing your computer and information 41
Using passwords 41
Setting Windows passwords 41
Setting Setup Utility (BIOS) passwords 42
Using the fingerprint reader (select models only) 42
Using Internet security software 42
Using antivirus software 43
Using firewall software 43
Installing software updates 43
Installing critical security updates 43
Securing your wireless network 44
Backing up your software applications and information 44
Using an optional security cable lock 44

9 Using Setup Utility (BIOS) 45
Starting Setup Utility (BIOS) 45
Updating the BIOS 45
Determining the BIOS version 45
Downloading a BIOS update 46

10 Using HP PC Hardware Diagnostics (UEFI) 47
Downloading HP PC Hardware Diagnostics (UEFI) to a USB device 47

11 Backing up, restoring, and recovering 49
Creating recovery media and backups (select models only) 49
Creating HP Recovery media (select models only) 49
Using Windows tools 50
Restore and recover (select models only) 50
Recovering using HP Recovery Manager (select models only) 51
What you need to know 51

Using the HP Recovery partition (select models only) 52
Using HP Recovery media to recover 52
Changing the computer boot order 52

12 Specifications 53
Input power 53
Operating environment 54

13 Electrostatic Discharge 55

Index 56

1 Starting right

This computer is a powerful tool designed to enhance your work and entertainment. Read this chapter to learn about best practices after you set up your computer and about where to find additional HP resources.

Visit the HP Apps Store

The HP Apps Store offers a wide choice of popular games, entertainment and music apps, productivity apps, and apps exclusive to HP that you can download to the Start screen. The selection is updated regularly and includes regional content and country-specific offers. Be sure to check the HP Apps Store frequently for new and updated features.

IMPORTANT: You must be connected to the Internet to access the HP Apps Store.

To view and download an app:

1. From the Start screen, select the **Store** app.
2. Select **HP picks** to view all the available apps.

   NOTE: **HP picks** is available in select countries only.

3. Select the app you want to download, and then follow the on-screen instructions. When the download is complete, the app appears on the All apps screen.

Best practices

After you set up and register the computer, we recommend the following steps to get the most out of your smart investment:

- Back up your hard drive by creating recovery media. See Backing up, restoring, and recovering on page 49.
- If you haven't already done so, connect to a wired or wireless network. See details in Connecting to a network on page 14.
- Become familiar with the computer hardware and software. For more information, see Getting to know your computer on page 4 and Enjoying entertainment features on page 19.
- Update or purchase antivirus software. See Using antivirus software on page 43.

More HP resources

To locate resources that provide product details, how-to information, and more, use this table.

Resource	Contents
Setup Instructions	• Overview of computer setup and features
Help and Support To access Help and Support: ▲ From the Start screen, type `help`, and then from the Search window, select **Help and Support**. For U.S. support, go to http://www.hp.com/go/contactHP. For worldwide support, go to http://welcome.hp.com/country/us/en/wwcontact_us.html.	• A broad range of how-to information and troubleshooting tips
Worldwide support To get support in your language, go to http://welcome.hp.com/country/us/en/wwcontact_us.html.	• Online chat with an HP technician • Support telephone numbers • HP service center locations
Safety & Comfort Guide To access this guide: 1. From the Start screen, type `support`, and then select the **HP Support Assistant** app. – or – From the Windows desktop, click the question mark icon in the notification area, at the far right of the taskbar. 2. Select **My computer**, and then select **User guides**. – or – Go to http://www.hp.com/ergo.	• Proper workstation setup • Guidelines for posture and work habits that increase your comfort and decrease your risk of injury • Electrical and mechanical safety information
Regulatory, Safety and Environmental Notices To access this document: 1. From the Start screen, type `support`, and then select the **HP Support Assistant** app. – or – From the Windows desktop, click the question mark icon in the notification area, at the far right of the taskbar. 2. Select **My computer**, and then select **User guides**.	• Important regulatory notices, including information about proper battery disposal
*Limited Warranty** To access this document: 1. From the Start screen, type `support`, and then select the **HP Support Assistant** app. – or –	• Specific warranty information about this computer

Resource	Contents
From the Windows desktop, click the question mark icon in the notification area, at the far right of the taskbar. 2. Select **My computer**, and then select **Warranty and services**. – or – Go to http://www.hp.com/go/orderdocuments.	
*You can find the expressly provided HP Limited Warranty applicable to your product located with the user guides on your computer and/or on the CD/DVD provided in the box. In some countries/regions, HP may provide a printed HP Limited Warranty in the box. For countries/regions where the warranty is not provided in printed format, you may request a printed copy from http://www.hp.com/go/orderdocuments or write to: ● **North America**: Hewlett-Packard, MS POD, 11311 Chinden Blvd., Boise, ID 83714, USA ● **Europe, Middle East, Africa**: Hewlett-Packard, POD, Via G. Di Vittorio, 9, 20063, Cernusco s/Naviglio (MI), Italy ● **Asia Pacific**: Hewlett-Packard, POD, P.O. Box 200, Alexandra Post Office, Singapore 911507 When you request a printed copy of your warranty, please include your product number, warranty period (found on your service label), name, and postal address. **IMPORTANT:** Do NOT return your HP product to the addresses above. For U.S. support, go to http://www.hp.com/go/contactHP. For worldwide support, go to http://welcome.hp.com/country/us/en/wwcontact_us.html.	

2 Getting to know your computer

Locating hardware

To find out what hardware is installed on your computer:

1. From the Start screen, type `control panel`, and then select **Control Panel**.

   – or –

   From the Windows desktop, right-click the **Start** button, and then select **Control Panel**.

2. Select **System and Security**, select **System**, and then click **Device Manager** in the left column.

   A list displays all the devices installed on your computer.

For information about system hardware components and the system BIOS version number, press fn +esc (select models only).

Locating software

To find out what software is installed on your computer:

▲ From the Start screen, click the down arrow in the lower-left corner of the screen.

– or –

From the Windows desktop, right-click the **Start** button, and then select **Programs and Features**.

Identifying components

Depending on the model, your computer may have some of the following components. To see which components are specific to your model, refer to the *Setup Instructions* poster provided in the computer box.

Component		Description
	AC adapter light	• On: The AC adapter is connected and the battery is charged. • Off: The computer is using battery power. – or – • White: The computer is connected to external power and the battery is charged from 90 to 99 percent. • Amber: The computer is connected to external power and the battery is charged from 0 to 90 percent. • Blinking amber: A battery that is the only available power source has reached a low battery level. When the battery reaches a critical battery level, the battery light begins blinking rapidly. • Off: The battery is fully charged.
	Accessory battery connector	Connects an optional accessory battery.
	Action keys	Execute frequently used system functions. NOTE: On select models, the f5 action key turns the radiance backlight keyboard (also known as keyboard backlight) feature off or on.
	Airplane mode key (also referred to as the wireless button)	Turns the airplane mode and wireless feature on or off. NOTE: A wireless network must be set up before a wireless connection is possible.
	Audio-in (microphone) jack	Connects an optional computer headset microphone, stereo array microphone, or monaural microphone.
	Audio-out (headphone) jack	Connects optional powered stereo speakers, headphones, earbuds, a headset, or a television audio cable. WARNING! To reduce the risk of personal injury, adjust the volume before using headphones, earbuds, or a headset. For additional safety information, see the *Regulatory, Safety and Environmental Notices*. To access this document: ▲ From the Start screen, type `support`, and then select the **HP Support Assistant** app. – or – From the Windows desktop, click the question mark icon in the notification area, at the far right of the taskbar. NOTE: When a device is connected to a headphone jack, the computer speakers are disabled.

Component		Description
	Audio-out (headphone)/Audio-in (microphone) jack	Connects optional powered stereo speakers, headphones, earbuds, a headset, or a television audio cable. Also connects an optional headset microphone. This jack does not support optional microphone-only devices. WARNING! To reduce the risk of personal injury, adjust the volume before putting on headphones, earbuds, or a headset. For additional safety information, refer to the *Regulatory, Safety, and Environmental Notices*. To access this document: ▲ From the Start screen, type `support`, and then select the **HP Support Assistant** app. – or – From the Windows desktop, click the question mark icon in the notification area, at the far right of the taskbar. NOTE: When a device is connected to the jack, the computer speakers are disabled. NOTE: Be sure that the device cable has a 4-conductor connector that supports both audio-out (headphone) and audio-in (microphone).
	Battery bay	Holds the battery.
	Battery lock	Locks the battery in the battery bay.
	Battery release latch	Releases the battery.
	Bluetooth® compartment	Contains a Bluetooth device.
	Caps lock light	On: Caps lock is on, which switches the keys to all capital letters.
	DisplayPort	Connects an optional digital display device, such as a high-performance monitor or projector.
	Docking connector	Connects an optional docking device.
	esc key	Displays system information when pressed in combination with the fn key.
	External monitor port	Connects an external VGA monitor or projector.
	Fingerprint reader	Allows a fingerprint logon to Windows, instead of a password logon.
	fn key	Executes frequently used system functions when pressed in combination with the esc key, or on select models, the b key or the spacebar.

Component		Description
	Hard drive light	• Blinking white: The hard drive is being accessed. • Amber: HP 3D DriveGuard has temporarily parked the hard drive.
	HDMI port	Connects an optional video or audio device, such as a high-definition television, any compatible digital or audio component, or a high-speed High-Definition Multimedia Interface (HDMI) device.
	HP Triple Bass Reflex Subwoofer	Provides superior bass sound.
	Integrated numeric keypad	When num lock is on, it can be used like an external numeric keypad.
	Internal display switch	Turns off the display and initiates Sleep if the display is closed while the power is on. NOTE: The internal display switch is not visible from the outside of the computer.
	Internal microphones	Record sound.
	Left control zone	Textured area that allows you to perform additional gestures.
	Left TouchPad button	Functions like the left button on an external mouse.
	Memory card reader	Reads optional memory cards that enable you to store, manage, share or access information. To insert a card: ▲ Hold the card label-side up, with connectors facing the slot, insert the card into the slot, and then push in on the card until it is firmly seated. To remove a card: ▲ Press in on the card it until it pops out.
	Mute light	• Amber: Computer sound is off. • Off: Computer sound is on.
	num lock key	Alternates between the navigational and numeric functions on the integrated numeric keypad.
	Optical drive	Depending on your computer model, reads an optical disc or reads and writes to an optical disc. NOTE: For disc compatibility information, go to the Help and Support web page (see More HP resources on page 2). Follow the web page instructions to select your computer model. Select **Drivers & Downloads**, and then follow the on-screen instructions.
	Power button	• When the computer is off, press the button to turn on the computer. • When the computer is on, press the button briefly to initiate Sleep. • When the computer is in the Sleep state, press the button briefly to exit Sleep.

Component		Description
		• When the computer is in Hibernation, press the button briefly to exit Hibernation. CAUTION: Pressing and holding down the power button will result in the loss of unsaved information. If the computer has stopped responding and Windows shutdown procedures are ineffective, press and hold the power button down for at least 5 seconds to turn off the computer. To learn more about your power settings, see your power options. ▲ From the Start screen, type `power`, select **Power and sleep settings**, and then select **Power and sleep** from the list of applications. – or – From the Windows desktop, right-click the **Start** button, and then select **Power Options**.
	Power connector	Connects an AC adapter.
	Power light	• On: The computer is on. • Blinking: The computer is in the Sleep state, a power-saving state. The computer shuts off power to the display and other components. • Off: The computer is off or in Hibernation. Hibernation is a power-saving state that uses the least amount of power.
	Right control zone	Textured area that allows you to perform additional gestures.
	Right TouchPad button	Functions like the right button on an external mouse.
	RJ-45 (network) jack/status lights	Connects a network cable. • White: The network is connected. • Amber: Activity is occurring on the network.
	Security cable slot	Attaches an optional security cable to the computer. NOTE: The security cable is designed to act as a deterrent, but it may not prevent the computer from being mishandled or stolen.
	Service door	Provides access to the hard drive bay, the wireless local area network (WLAN) module slot, the wireless wide area network (WWAN) module slot, and the memory module slots.

Component		Description
		CAUTION: To prevent an unresponsive system, replace the wireless module only with a wireless module authorized for use in the computer by the governmental agency that regulates wireless devices in your country or region. If you replace the module and then receive a warning message, remove the module to restore computer functionality, and then contact support through Help and Support. ▲ From the Start screen, type `help`, and then select **Help and Support**. - or - From the Windows desktop, click the question mark icon in the notification area, at the far right of the taskbar.
	Service door release latch	Releases the service door.
	SIM slot	Supports a wireless subscriber identity module (SIM). The SIM slot is located inside the battery bay.
	Speakers	Produce sound.
	TouchPad light	On: The TouchPad is off.
	TouchPad zone	Reads your finger gestures to move the pointer or activate items on the screen. NOTE: The TouchPad also supports edge-swipe gestures.
	USB 2.0 charging (powered) port	Connects an optional USB device, such as a keyboard, mouse, external drive, printer, scanner or USB hub. Standard USB ports will not charge all USB devices or will charge using a low current. Some USB devices require power and require you to use a powered port. NOTE: USB charging ports can also charge select models of cell phones and MP3 players, even when the computer is off.
	USB 2.0 port	Connects an optional USB device, such as a keyboard, mouse, external drive, printer, scanner or USB hub.
	USB 3.0 charging (powered) port	Connects an optional USB device, such as a keyboard, mouse, external drive, printer, scanner or USB hub. Standard USB ports will not charge all USB devices or will charge using a low current. Some USB devices require power and require you to use a powered port. NOTE: USB charging ports can also charge select models of cell phones and MP3 players, even when the computer is off.
	USB 3.0 port	Connects an optional USB device, such as a keyboard, mouse, external drive, printer, scanner or USB hub.
	Vents	Enable airflow to cool internal components.

Component		Description
		NOTE: The computer fan starts up automatically to cool internal components and prevent overheating. The number of vents varies depending on the computer model. It is normal for the internal fan to cycle on and off during routine operation.
	Webcam	Records video and captures photographs. Some models allow you to video conference and chat online using streaming video. To use the webcam: ▲ From the Start screen, type `camera`, and then select **Camera** from the list of applications. – or – From the Windows desktop, click the **Start** button, click **All Programs** to find your webcam software.
	Webcam light	On: The webcam is in use.
	Windows application key	Displays options for a selected object.
	Windows key	Returns you to the Start screen from an open app or the Windows desktop. NOTE: Pressing the Windows key again will return you to the previous screen.
	Wireless light	On: An integrated wireless device, such as a WLAN device and/or a Bluetooth® device, is on. NOTE: On some models, the wireless light is amber when all wireless devices are off.
	WLAN antennas	Send and receive wireless signals to communicate with WLANs. NOTE: The antennas are not visible from the outside of the computer. For optimal transmission, keep the areas immediately around the antennas free from obstructions. For wireless regulatory notices, see the section of the *Regulatory, Safety, and Environmental Notices* that applies to your country or region. To access this document: ▲ From the Start screen, type `support`, and then select the **HP Support Assistant** app. – or – From the Windows desktop, click the question mark icon in the notification area, at the far right of the taskbar.
	WWAN antennas	Send and receive wireless signals to communicate with WWANs.

Component	Description
	NOTE: The antennas are not visible from the outside of the computer. For optimal transmission, keep the areas immediately around the antennas free from obstructions. For wireless regulatory notices, see the section of the *Regulatory, Safety, and Environmental Notices* that applies to your country or region. To access this document: ▲ From the Start screen, type `support`, and then select the **HP Support Assistant** app. – or – From the Windows desktop, click the question mark icon in the notification area, at the far right of the taskbar.

Using the action keys

Depending on the model, your computer may have the function key features as described in this table.

An action key performs an assigned function. The icon on each of the action keys illustrates the assigned function for that key.

To use an action key function, press and hold the key.

CAUTION: Use extreme care when making changes in Setup Utility (BIOS). Errors can prevent the computer from operating properly.

NOTE: The action key feature is enabled at the factory. You can disable this feature in Setup Utility (BIOS). Refer to Help and Support for additional information.

After you have disabled the action key feature, you can still perform each function by pressing the fn key in combination with the appropriate action key.

Icon	Description
?	Opens Help and Support, which provides tutorials, information about the Windows operating system and your computer, answers to questions, and updates to your computer. Help and Support also provides automated troubleshooting tools and access to support.
	Decreases the screen brightness incrementally as long as you hold down the key.
	Increases the screen brightness incrementally as long as you hold down the key.
	Switches the screen image between display devices connected to the system. For example, if a monitor is connected to the computer, repeatedly pressing this key alternates the screen image from the computer display to the monitor display to a simultaneous display on both the computer and the monitor.
	Turns the radiance backlight keyboard (also known as keyboard backlight) feature off or on. NOTE: To conserve battery power, turn off this feature.

Icon	Description
⏮	Plays the previous track of an audio CD or the previous section of a DVD or a BD.
⏯	Begins, pauses, or resumes playback of an audio CD, a DVD, or a BD.
⏭	Plays the next track of an audio CD or the next section of a DVD or a BD.
■	Stops audio or video playback of a CD, a DVD, or a BD.
🔉−	Decreases speaker volume incrementally while you hold down the key.
🔉+	Increases speaker volume incrementally while you hold down the key.
🔇	Mutes or restores speaker sound.
(( ))	Turns the wireless feature on or off. NOTE: A wireless network must be set up before a wireless connection is possible.
✈	Turns the airplane mode and wireless feature on or off. NOTE: The airplane mode key is also referred to as the wireless button. NOTE: A wireless network must be set up before a wireless connection is possible.

Labels

The labels affixed to the computer provide information you may need when you troubleshoot system problems or travel internationally with the computer.

IMPORTANT: Check the following locations for the labels described in this section: the bottom of the computer, inside the battery bay, under the removable service door, or on the back of the display.

- Service label—Provides important information to identify your computer. When contacting support, you will probably be asked for the serial number, and possibly for the product number or the model number. Locate these numbers before you contact support.

  Your service label will resemble one of the examples shown below. Refer to the illustration that most closely matches the service label on your computer.

Component	
(1)	Serial number
(2)	Product number
(3)	Warranty period
(4)	Model number (select models only)

- Microsoft® Certificate of Authenticity label (select models only prior to Windows 8)—Contains the Windows Product Key. You may need the Product Key to update or troubleshoot the operating system. HP platforms with Windows 8 or Windows 8.x preinstalled do not have the physical label. Instead a Digital Product Key is electronically installed.

NOTE: The Digital Product Key is automatically recognized and activated by Microsoft operating systems when a Windows 8 or Windows 8.x operating system is reinstalled using HP-approved recovery methods.

- Regulatory label(s)—Provide(s) regulatory information about the computer.
- Wireless certification label(s)—Provide(s) information about optional wireless devices and the approval markings for the countries or regions in which the devices have been approved for use.

3 Connecting to a network

Your computer can travel with you wherever you go. But even at home, you can explore the globe and access information from millions of websites using your computer and a wired or wireless network connection. This chapter will help you get connected to that world.

Connecting to a wireless network

Your computer may be equipped with one or more of the following wireless devices:

- WLAN device—Connects the computer to wireless local area networks (commonly referred to as Wi-Fi networks, wireless LANs, or WLANs) in corporate offices, your home, and public places such as airports, restaurants, coffee shops, hotels, and universities. In a WLAN, the mobile wireless device in your computer communicates with a wireless router or a wireless access point.
- HP Mobile Broadband Module—Gives you wireless connectivity over a wireless wide area network (WWAN), a much larger area. Mobile network operators install base stations (similar to cell phone towers) throughout large geographic areas, effectively providing coverage across entire states, regions, or even countries.
- Bluetooth device—Creates a personal area network (PAN) to connect to other Bluetooth-enabled devices such as computers, phones, printers, headsets, speakers, and cameras. In a PAN, each device communicates directly with other devices, and devices must be relatively close together—typically within 10 meters (approximately 33 feet) of each other.

For more information about wireless technology, the Internet, and networking, see the information and website links provided in Help and Support.

▲ From the Start screen, type `help`, and then select **Help and Support**.

– or –

From the Windows desktop, click the question mark icon in the notification area, at the far right of the taskbar.

Using the wireless controls

You can control the wireless devices in your computer using one or more of these features:

- Wireless button or wireless key (also called the airplane mode key) (referred to in this chapter as the wireless button)
- Operating system controls

Wireless button

The computer has a wireless button, one or more wireless devices, and, on select models, one or two wireless lights. All the wireless devices on your computer are enabled at the factory. If your computer has a wireless light, the wireless light is on (white) when your computer is on.

The wireless light indicates the overall power state of your wireless devices, not the status of individual devices. If the wireless light is white, at least one wireless device is on. If the wireless light is off, all wireless devices are off.

NOTE: On some models, the wireless light is amber when all wireless devices are off.

Because the wireless devices are enabled at the factory, you can use the wireless button to turn on or turn off all the wireless devices simultaneously.

Operating system controls

The Network and Sharing Center allows you to set up a connection or network, connect to a network, and diagnose and repair network problems.

To use operating system controls:

1. From the Start screen, type `control panel`, and then select **Control Panel**.

   – or –

   From the Windows desktop, right-click the **Start** button, and then select **Control Panel**.

2. Select **Network and Internet**, and then select **Network and Sharing Center**.

For more information, see the information provided in Help and Support.

▲ From the Start screen, type `help`, and then select **Help and Support**.

– or –

From the Windows desktop, click the question mark icon in the notification area, at the far right of the taskbar.

Connecting to a WLAN

To connect to a WLAN, follow these steps:

1. Be sure that the WLAN device is on. On select models, if the device is on, the wireless light is white. If the wireless light is off, press the wireless button.

   NOTE: On some models, the wireless light is amber when all wireless devices are off.

2. From the Start screen or the Windows desktop, point to the upper-right or lower-right corner of the display to reveal the charms.
3. Select **Settings**, and then click the network status icon.
4. Select your WLAN from the list.
5. Click **Connect**.

   If the WLAN is a security-enabled WLAN, you are prompted to enter a security code. Type the code, and then click **Next** to complete the connection.

   NOTE: If no WLANs are listed, you may be out of range of a wireless router or access point.

   NOTE: If you do not see the WLAN you want to connect to, from the Windows desktop, right-click the network status icon, and then select **Open Network and Sharing Center**. Click **Set up a new connection or network**. A list of options is displayed, allowing you to manually search for and connect to a network or to create a new network connection.

6. Follow the on-screen instructions to complete the connection.

After the connection is made, place the mouse pointer over the network status icon in the notification area, at the far right of the taskbar, to verify the name and status of the connection.

NOTE: The functional range (how far your wireless signals travel) depends on WLAN implementation, router manufacturer, and interference from other electronic devices or structural barriers such as walls and floors.

Using HP Mobile Broadband (select models only)

HP Mobile Broadband enables your computer to use WWANs to access the Internet from more places and over larger areas than it can by using WLANs. Using HP Mobile Broadband requires a network service provider (called a *mobile network operator*), which in most cases is a cellular phone network operator. Coverage for HP Mobile Broadband is similar to cellular phone voice coverage.

When used with a mobile network operator service, HP Mobile Broadband gives you the freedom to stay connected to the Internet, send email, or connect to your corporate network whether you are on the road or outside the range of Wi-Fi hotspots.

You might need the HP Mobile Broadband Module IMEI and/or MEID number to activate mobile broadband service.The serial number is printed on a label located on the bottom of your computer.

Some mobile network operators require the use of a subscriber identity module (SIM). A SIM contains basic information about you, such as a personal identification number (PIN), as well as network information. Some computers include a SIM that is preinstalled in the battery bay. If the SIM is not preinstalled, it may be included with the HP Mobile Broadband documents provided with your computer, or the mobile network operator may provide it separately from the computer.

For information about HP Mobile Broadband and how to activate service with a preferred mobile network operator, see the HP Mobile Broadband documents included with your computer.

Using Bluetooth wireless devices (select models only)

A Bluetooth device provides short-range wireless communications that replace the physical cable connections that traditionally link electronic devices such as the following:

- Computers (desktop, notebook)
- Phones (cellular, cordless, smartphone)
- Imaging devices (printer, camera)
- Audio devices (headset, speakers)
- Mouse
- External keyboard

Bluetooth devices provide peer-to-peer capability that allows you to set up a PAN of Bluetooth devices. For information about configuring and using Bluetooth devices, see the Bluetooth software Help.

Connecting to a wired network—LAN (select models only)

Use a LAN connection if you want to connect the computer directly to a router in your home (instead of working wirelessly), or if you want to connect to an existing network at your office.

Connecting to a LAN requires an 8-pin, RJ-45 (network) cable and a network jack on the computer.

To connect the network cable, follow these steps:

1. Plug the network cable into the network jack **(1)** on the computer.

2. Plug the other end of the network cable into a network wall jack **(2)** or router.

NOTE: If the network cable contains noise suppression circuitry **(3)**, which prevents interference from TV and radio reception, orient the circuitry end of the cable toward the computer.

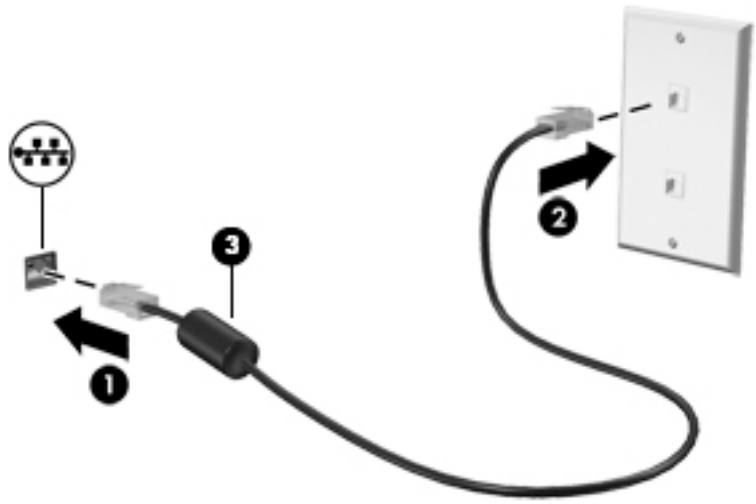

Sharing data and drives and accessing software

When your computer is part of a network, you are not limited to using only the information that is stored in your computer. Computers connected to the network can exchange software and data with each other.

For more information about sharing files, folders, or drives, see the information provided in Help and Support.

▲ From the Start screen, type `help`, and then select **Help and Support**.

– or –

From the Windows desktop, click the question mark icon in the notification area, at the far right of the taskbar.

NOTE: When a disc like a DVD movie or game is copy-protected, it cannot be shared.

Sharing media and data across your home group network (select models only)

Use sMedio 360 software (select models only) to share media and data between the devices on your home group network. Before you can use sMedio 360, all of your computers and mobile devices must be on the same home group network and media sharing must be enabled.

NOTE: For details on how to enable media sharing on additional devices, refer to the device manufacturer's instructions.

1. To set up a home group network:

   ▲ From the Start screen, click the **sMedio 360** app, and then click **Tutorial**.

2. To enable media sharing on your computer:

a. From the Start screen or the Windows desktop, point to the upper-right or lower-right corner of the display to reveal the charms.

b. Select **Settings**, and then click the network status icon.

c. Right-click the network you are connected to, and then select the check box to turn on sharing.

4 Enjoying entertainment features

Use your HP computer as an entertainment hub to socialize via the webcam, enjoy and manage your music, and download and watch movies. Or, to make your computer an even more powerful entertainment center, connect external devices like a monitor, projector, or TV, or speakers and headphones.

Using a webcam (select models only)

The computer has an integrated webcam that records video and captures photographs. Some models may allow you to video conference and chat online using streaming video.

▲ To start the webcam, from the Start screen, type `camera`, and then select **Camera** from the list of applications.

For details about using the webcam, go to Help and Support.

▲ From the Start screen, type `help`, and then select **Help and Support**.

– or –

From the Windows desktop, click the question mark icon in the notification area, at the far right of the taskbar.

Using audio

On your computer, or on select models using an external optical drive, you can play music CDs, download and listen to music, stream audio content from the web (including radio), record audio, or mix audio and video to create multimedia. To enhance your listening enjoyment, attach external audio devices such as speakers or headphones.

Connecting speakers

You can attach wired speakers to your computer by connecting them to a USB port or to the audio-out (headphone) jack on your computer or on a docking station.

To connect wireless speakers to your computer, follow the device manufacturer's instructions. To connect high-definition speakers to the computer, see Setting up HDMI audio on page 22. Before connecting speakers, lower the volume setting.

Connecting headphones

⚠ **WARNING!** To reduce the risk of personal injury, lower the volume setting before putting on headphones, earbuds, or a headset. For additional safety information, see the *Regulatory, Safety and Environmental Notices*. To access this document, from the Start screen, type `support`, and then select the **HP Support Assistant** app.

You can connect wired headphones to the headphone jack or to the audio-out (headphone)/audio-in (microphone) combo jack on your computer.

To connect wireless headphones to your computer, follow the device manufacturer's instructions.

Connecting a microphone

To record audio, connect a microphone to the microphone jack on the computer. For best results when recording, speak directly into the microphone and record sound in a setting free of background noise.

Connecting headsets

WARNING! To reduce the risk of personal injury, lower the volume setting before putting on headphones, earbuds, or a headset. For additional safety information, see the *Regulatory, Safety and Environmental Notices*. To access this document, from the Start screen, type `support`, and then select the **HP Support Assistant** app.

Headphones combined with a microphone are called *headsets*. You can connect wired headsets to the audio-out (headphone)/audio-in (microphone) jack on your computer.

To connect *wireless* headsets to your computer, follow the device manufacturer's instructions.

Using Beats Audio (select models only)

Beats Audio is an enhanced audio feature that provides a deep, controlled bass while maintaining a clear sound. You can experience Beats Audio through the computer's internal speakers, through external speakers connected to a USB port, or through Beats Audio headphones connected to the headphone jack.

Accessing Beats Audio Control Panel

Use Beats Audio Control Panel to view and manually control audio and bass settings.

1. From the Start screen, type `control panel`, select **Control Panel**, select **Hardware and Sound**, and then select **Beats Audio Control Panel**.

   – or –

   From the Windows desktop, right-click the **Start** button, and then select **Control Panel**.

2. Select **Hardware and Sound**, and then select **Beats Audio Control Panel**.

Enabling and disabling Beats Audio

▲ To enable or disable Beats Audio, press the fn key in combination with the b key.

Using video

Your computer is a powerful video device that enables you to watch streaming video from your favorite websites and download video and movies to watch on your computer when you are not connected to a network.

To enhance your viewing enjoyment, use one of the video ports on the computer to connect an external monitor, projector, or TV.

IMPORTANT: Be sure that the external device is connected to the correct port on the computer, using the correct cable. Follow the device manufacturer's instructions.

For information on using your video features, refer to Help and Support.

Connecting video devices by using a VGA cable (select models only)

NOTE: To connect a VGA video device to your computer, you need an VGA cable, purchased separately.

To see the computer screen image on an external VGA monitor or projected for a presentation, connect a monitor or projector to the computer's VGA port.

1. Connect the VGA cable from the monitor or projector to the VGA port on the computer as shown.

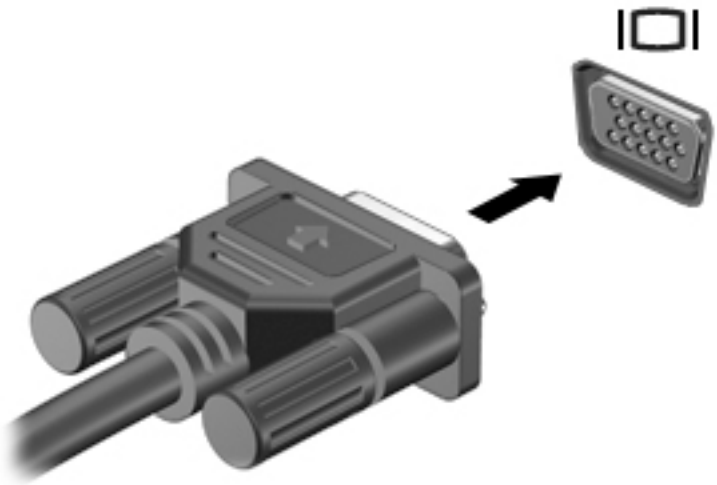

2. Press f4 to alternate the screen image between 4 display states:
   - **PC Screen only:** View the screen image on the computer only.
   - **Duplicate:** View the screen image simultaneously on both the computer and the external device.
   - **Extend:** View the screen image extended across the computer and the external device.
   - **Second screen only:** View the screen image on the external device only.

   Each time you press f4, the display state changes.

   NOTE: For best results, especially if you choose the "Extend" option, increase the screen resolution of the external device, as follows. From the Start screen, type `control panel`, and then select **Control Panel**. Select **Appearance and Personalization**. Under **Display**, select **Adjust screen resolution**.

Connecting video devices using an HDMI cable (select models only)

NOTE: To connect an HDMI device to your computer, you need an HDMI cable, purchased separately.

To see the computer screen image on a high-definition TV or monitor, connect the high-definition device according to the following instructions:

1. Connect one end of the HDMI cable to the HDMI port on the computer.

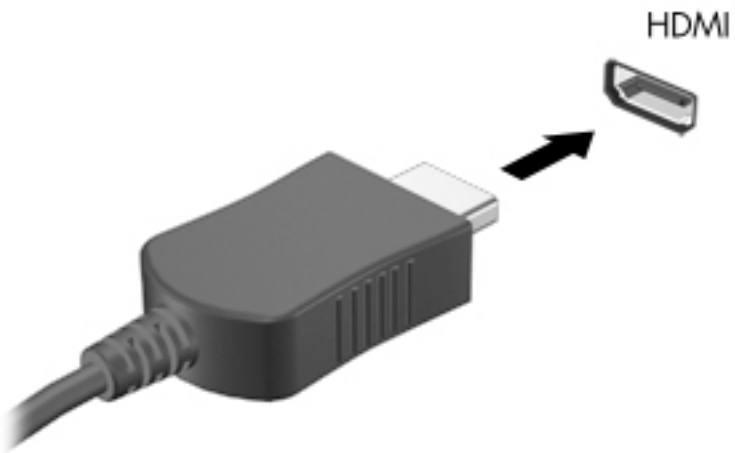

2. Connect the other end of the cable to the high-definition TV or monitor.
3. Press f4 to alternate the computer screen image between 4 display states:
   - **PC screen only:** View the screen image on the computer only.
   - **Duplicate:** View the screen image simultaneously on both the computer and the external device.
   - **Extend:** View the screen image extended across the computer and the external device.
   - **Second screen only:** View the screen image on the external device only.

   Each time you press f4, the display state changes.

NOTE: For best results, especially if you choose the "Extend" option, increase the screen resolution of the external device, as follows. From the Start screen, type `control panel`, and then select **Control Panel**. Select **Appearance and Personalization**. Under **Display**, select **Adjust screen resolution**.

Setting up HDMI audio

HDMI is the only video interface that supports high-definition video and audio. After you connect an HDMI TV to the computer, you can then turn on HDMI audio by following these steps:

1. From the Windows desktop, right-click the **Speakers** icon in the notification area, at the far right of the taskbar, and then select **Playback devices**.
2. On the **Playback** tab, select the name of the digital output device.
3. Click **Set Default**, and then click **OK**.

To return the audio stream to the computer speakers:

1. From the Windows desktop, right-click the **Speakers** icon in the notification area, at the far right of the taskbar, and then click **Playback devices**.
2. On the Playback tab, click **Speakers**.
3. Click **Set Default**, and then click **OK**.

Connecting digital display devices using a DisplayPort cable (select models only)

NOTE: To connect a digital display device to your computer, you need a DisplayPort (DP-DP) cable, purchased separately.

The DisplayPort connects a digital display device such as a high-performance monitor or projector. The DisplayPort delivers higher performance than the VGA external monitor port and improves digital connectivity.

1. Connect one end of the DisplayPort cable to the DisplayPort on the computer.

2. Connect the other end of the cable to the digital display device.
3. Press f4 to alternate the computer screen image between 4 display states:
   - **PC screen only:** View the screen image on the computer only.
   - **Duplicate:** View the same screen image simultaneously on both the computer and the external device.
   - **Extend:** View the screen image extended across the computer and the external device.
   - **Second screen only:** View the screen image on the external device only.

   Each time you press f4, the display state changes.

NOTE: For best results, especially if you choose the "Extend" option, increase the screen resolution of the external device, as follows. From the Start screen, type `control panel`, and then select **Control Panel**. Select **Appearance and Personalization**. Under **Display**, select **Adjust screen resolution**.

Connecting Miracast-compatible wireless displays (select models only)

To discover and connect to Miracast-compatible wireless displays, follow the steps below.

To open Miracast:

▲ Point to the upper-right or lower-right corner of the Start screen or the Windows desktop to display the charms, click **Devices**, click **Project**, and then follow the on-screen instructions.

– or –

On select computer models, from the Start screen, click the **HP Quick Access to Miracast** icon, and then follow the on-screen instructions.

5 Navigating the screen

To quickly return to the Start screen, press the Windows key on a keyboard or the Windows button on a tablet.

You can navigate the computer screen in the following ways:

- Touch gestures
- Keyboard and optional mouse (purchased separately)

NOTE: An external USB mouse (purchased separately) can be connected to a USB ports on the computer.

Using the TouchPad and touch screen gestures

The TouchPad helps you navigate the computer screen and control the pointer using simple touch gestures. To navigate the touchscreen, you can use the left and right TouchPad buttons as you would use the corresponding buttons on an external mouse. You can also customize gestures and view demonstrations of how they work.

From the Start screen, type `control panel`, select **Control Panel**, and then select **Hardware and Sound**. Under **Devices and Printers**, select **Mouse**.

NOTE: Most of the gestures shown here can be used on either the TouchPad or touchscreen. TouchPad gestures are not supported in all apps.

Tap

Use the tap/double-tap gesture to select or open an item on the screen.

- Point to an item on the screen, and then tap one finger on the TouchPad zone select it. Double-tap an item to open it.

Two-finger scroll

Use the two-finger scroll gesture to move up, down, or sideways on a page or image.

- Place two fingers slightly apart on the TouchPad zone and then drag them up, down, left, or right.

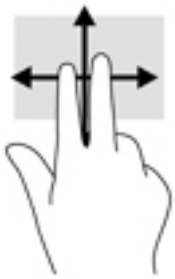

Two-finger pinch zoom

Use the two-finger pinch zoom to zoom out or in on images or text.

- Zoom out by placing two fingers apart on the TouchPad zone and then moving your fingers together.
- Zoom in by placing two fingers together on the TouchPad zone and then moving your fingers apart.

Two-finger click

Use the two-finger click gesture to open the menu for an object on the screen.

NOTE: The two-finger click performs the same function as right-clicking with the mouse.

- Place two fingers on the TouchPad zone and press down to open the options menu for the selected object.

Right-edge swipe

Use the right-edge swipe to reveal the charms, which let you search, share, start apps, access devices, or change settings.

- Gently swipe your finger inward from the right edge of the TouchPad to reveal the charms.

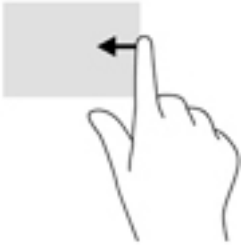

Left-edge swipe

Use the left-edge swipe to reveal your open apps so that you can access them quickly.

- Gently swipe your finger inward from the left edge of the TouchPad to switch between apps. Without lifting your finger, swipe back toward the left edge to reveal all open apps.

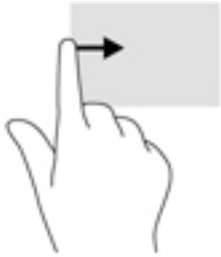

Top-edge swipe and bottom-edge swipe

Use the top-edge swipe or bottom-edge swipe to display command options that allow you to customize an open app.

IMPORTANT: When an app is open, the top-edge swipe varies depending on the app.

- Gently swipe your finger from the top edge or the bottom edge to reveal the app command options.

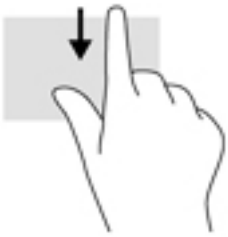

One-finger slide (touch screen only)

Use the one-finger slide to pan or scroll through lists and pages, or to move an object.

- To scroll across the screen, lightly slide one finger across the screen in the direction you want to move.
- To drag, press and hold an object, and then drag the object to move it.

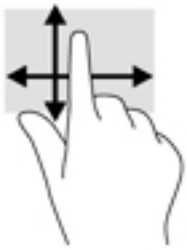

Using a keyboard and optional mouse

A keyboard and optional external mouse allow you to type, select items, scroll, and perform similar functions as you do touch gestures. For details, refer to Getting to know your computer on page 4.

TIP: The Windows key on a keyboard or the Windows button on a tablet allow you to quickly return to the Start screen from an open app or the Windows desktop. Press the button or key again to return to the previous screen.

6 Managing power

Your computer can operate on either battery power or external power. When the computer is running on battery power only and an AC power source is not available to charge the battery, it is important to monitor and conserve the battery charge.

Initiating and exiting Sleep and Hibernation

Windows has two power-saving states, Sleep and Hibernation.

- Sleep—The Sleep state is automatically initiated after a period of inactivity. Your work is saved to memory, allowing you to resume your work very quickly. You can also initiate Sleep manually. For more information, see Manually initiating and exiting Sleep on page 30.
- Hibernation—The Hibernation state is automatically initiated if the battery reaches a critical level. In the Hibernation state, your work is saved to a hibernation file and the computer powers down. You can also initiate Hibernation manually. For more information, see Manually initiating and exiting Hibernation (select models only) on page 30.

CAUTION: To reduce the risk of possible audio and video degradation, loss of audio or video playback functionality, or loss of information, do not initiate the Sleep state while reading from or writing to a disc or an external media card.

NOTE: You cannot initiate any type of networking connection or perform any computer functions while the computer is in the Sleep state or in the Hibernation state.

Manually initiating and exiting Sleep

You can initiate Sleep in any of the following ways:

- Close the display.
- From the Start screen or the Windows desktop, point to the upper-right or lower-right corner of the screen to reveal the charms. Click **Settings**, click the **Power** icon, and then click **Sleep**.

You can exit Sleep in any of the following ways:

- Briefly press the power button.
- If the computer is closed, raise the display.
- Press a key on the keyboard.
- Tap or swipe the TouchPad.

When the computer exits Sleep, the power lights turn on and your work returns to the screen.

NOTE: If you have set a password to be required on exiting Sleep, you must enter your Windows password before your work returns to the screen.

Manually initiating and exiting Hibernation (select models only)

You can enable user-initiated Hibernation and change other power settings and timeouts using Power Options.

1. From the Start screen, type `power options`, and then select **Power options**.

   – or –

   From the Windows desktop, right-click the **Start** button, and then click **Power Options**.
2. In the left pane, click **Choose what the power button does**.
3. Click **Change Settings that are currently unavailable**.
4. In the **When I press the power button** area, select **Hibernate**.
5. Click **Save changes**.

To exit Hibernation:

▲ Briefly press the power button.

When the computer exits Hibernation, the power lights turn on and your work returns to the screen.

NOTE: If you have set a password to be required on exiting Hibernation, you must enter your Windows password before your work returns to the screen.

Setting password protection on wakeup (exiting Sleep or Hibernation)

To set the computer to prompt for a password when the computer exits Sleep or Hibernation, follow these steps:

1. From the Start screen, type `power options`, and then select **Power options**.

   – or –

   From the Windows desktop, right-click the **Start** button, and then click **Power Options**.
2. In the left pane, click **Require a password on wakeup**.

3. Click **Change Settings that are currently unavailable**.
4. Click **Require a password (recommended)**.

   NOTE: If you need to create a user account password or change your current user account password, click **Create or change your user account password**, and then follow the on-screen instructions. If you do not need to create or change a user account password, go to step 5.

5. Click **Save changes**.

Using the power meter and power settings

The power meter is located on the Windows desktop. The power meter allows you to quickly access power settings and view the remaining battery charge.

- To view the percentage of remaining battery charge and the current power plan, place the mouse pointer over the power meter icon.
- To use Power Options, click the power meter icon and select an item from the list. From the Start screen, you can also type `power options`, and then select **Power Options**.

Different power meter icons indicate whether the computer is running on battery or external power. Placing the mouse pointer over the icon reveals a message if the battery has reached a low or critical battery level.

Running on battery power

When a charged battery is in the computer and the computer is not plugged into external power, the computer runs on battery power. When the computer is off and unplugged from external power, the battery in the computer slowly discharges. The computer will display a message when the battery reaches a low or critical battery level.

Computer battery life varies, depending on power management settings, programs running on the computer, screen brightness, external devices connected to the computer, and other factors.

Factory-sealed battery (select models only)

To monitor the status of the battery, or if the battery is no longer holding a charge, run Battery Check in the HP Support Assistant app.

1. From the Start screen, type `support`, and then select the **HP Support Assistant** app.

   – or –

   From the Windows desktop, click the question mark icon in the notification area, at the far right of the taskbar.

2. Select **Battery and performance**. If Battery Check indicates that your battery should be replaced, contact support.

The battery(ies) in this product cannot be easily replaced by users themselves. Removing or replacing the battery could affect your warranty coverage. If a battery is no longer holding a charge, contact support.

The battery[ies] in this product cannot be easily replaced by user themselves. Removing or replacing the battery could affect your warranty coverage. If a battery is no longer holding a charge, contact support. When a battery has reached the end of its useful life, do not dispose of the battery in general household waste. Follow the local laws and regulations in your area for battery disposal.

User-replaceable battery (select models only)

WARNING! To reduce potential safety issues, use only the user-replaceable battery provided with the computer, a replacement battery provided by HP, or a compatible battery purchased from HP.

CAUTION: Removing a user-replaceable battery that is the sole power source for the computer can cause loss of information. To prevent loss of information, save your work or shut down the computer through Windows before removing the battery.

To remove the user-replaceable battery (select models only), refer to the steps and illustration that most closely match your computer:

1. Turn the computer upside down on a flat surface.
2. Slide the battery release latch **(1)** to release the battery.

   NOTE: The battery release latch automatically returns to its original position.

3. Remove the battery from the computer **(2)**.

– or –

1. Turn the computer upside down on a flat surface.
2. Slide the battery release latch **(1)** to release the battery.

   NOTE: The battery release latch automatically returns to its original position.

3. Pivot the battery upward **(2)**, and then remove it from the computer **(3)**.

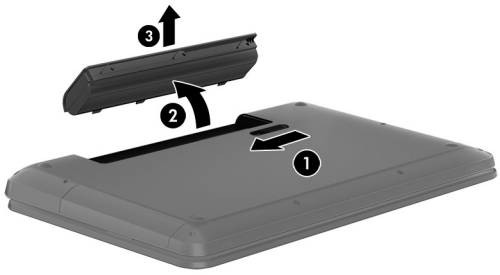

Finding battery information

To access battery information:

1. From the Start screen, type `support`, and then select the **HP Support Assistant** app.

   – or –

   From the Windows desktop, click the question mark icon in the notification area, at the far right of the taskbar.

2. Select **Battery and Performance**.

HP Support Assistant provides the following tools and information about the battery:

- Battery Check
- Information about battery types, specifications, life cycles, and capacity

Conserving battery power

To conserve battery power and maximize battery life:

- Lower the brightness of the display.
- Select the **Power saver** setting in Power Options.
- If the computer will be unused and unplugged from external power for more than 2 weeks, remove the user-replaceable battery from the computer and store it separately in a cool, dry place.
- Turn off wireless devices when you are not using them.
- Disconnect unused external devices that are not plugged into an external power source, such as an external hard drive connected to a USB port.
- Stop, disable, or remove any external media cards that you are not using.
- Before you leave your work, initiate Sleep or shut down the computer.

Resolving a low battery level

Resolving a low battery level when external power is available

Connect one of the following to the computer and to external power:

- AC adapter
- Optional docking or expansion device
- Optional power adapter purchased as an accessory from HP

Resolving a low battery level when no power source is available

Save your work and shut down the computer.

Resolving a low battery level when the computer cannot exit Hibernation

1. Replace the discharged user-replaceable battery with a charged battery, or connect the AC adapter to the computer and to external power.
2. Exit Hibernation by pressing the power button.

Storing a user-replaceable battery (select models only)

⚠ CAUTION: To reduce the risk of damage to a battery, do not expose it to high temperatures for extended periods of time.

If a computer will be unused and unplugged from external power for more than 2 weeks, remove the battery and store it separately in a cool, dry place to prolong the battery charge.

A stored battery should be checked every 6 months. If the capacity is less than 50 percent, recharge the battery before returning it to storage.

Disposing of a user-replaceable battery (select models only)

⚠ **WARNING!** To reduce the risk of fire or burns, do not disassemble, crush, or puncture; do not short external contacts; do not dispose of in fire or water.

See the *Regulatory, Safety and Environmental Notices* for proper battery disposal.

To access this document:

▲ From the Start screen, type `support`, and then select the **HP Support Assistant** app.

– or –

From the Windows desktop, click the question mark icon in the notification area, at the far right of the taskbar.

Running on AC power

For information about connecting to AC power, refer to the *Setup Instructions* poster provided in the computer box.

The computer does not use battery power when the computer is connected to AC power with an approved AC adapter or an optional docking/expansion device.

⚠ **WARNING!** To reduce potential safety issues, use only the AC adapter provided with the computer, a replacement AC adapter provided by HP, or a compatible AC adapter purchased from HP.

Connect the computer to AC power under any of the following conditions:

⚠ **WARNING!** Do not charge the computer battery while you are aboard aircraft.

- When charging or calibrating a battery
- When installing or modifying system software
- When writing information to a disc (select models only)
- When running Disk Defragmenter on computers with internal hard drives
- When performing a backup or recovery

When you connect the computer to AC power:

- The battery begins to charge.
- The screen brightness increases.
- The power meter icon on the Windows desktop changes appearance.

When you disconnect AC power:

- The computer switches to battery power.
- The screen brightness automatically decreases to save battery life.
- The power meter icon on the Windows desktop changes appearance.

Troubleshooting power problems

Test the AC adapter if the computer exhibits any of the following symptoms when it is connected to AC power:

- The computer does not turn on.
- The display does not turn on.
- The power lights do not turn on.

To test the AC adapter:

1. Shut down the computer.
2. Connect the AC adapter to the computer, and then plug it into an AC outlet.
3. Turn on the computer.
   - If the power lights turn *on*, the AC adapter is working properly.
   - If the power lights remain *off*, check the connection from the AC adapter to the computer and the connection from the AC adapter to the AC outlet to be sure that the connections are secure.
   - If the connections are secure and the power lights remain *off*, the AC adapter is not functioning and should be replaced.

Contact support for information about obtaining a replacement AC power adapter.

Shutting down (turning off) the computer

CAUTION: Unsaved information is lost when the computer shuts down. Be sure to save your work before shutting down the computer.

The Shut down command closes all open programs, including the operating system, and then turns off the display and computer.

Shut down the computer under any of the following conditions:

- When you need to replace the battery or access components inside the computer
- When you are connecting an external hardware device that does not connect to a USB or video port
- When the computer will be unused and disconnected from external power for an extended period

Although you can turn off the computer with the power button, the recommended procedure is to use the Windows Shut down command.

NOTE: If the computer is in the Sleep state or in Hibernation, first exit Sleep or Hibernation by briefly pressing the power button.

1. Save your work and close all open programs.
2. From the Start screen or the Windows desktop, point to the upper-right or lower-right corner of the screen to reveal the charms.
3. Click **Settings**, click the **Power** icon, and then click **Shut down**.

   – or –

Right-click the **Start** button in the lower-left corner of the screen, select **Shut down or sign out**, and then select **Shut down**.

If the computer is unresponsive and you are unable to use the preceding shutdown procedures, try the following emergency procedures in the sequence provided:

- Press ctrl+alt+delete, click the **Power** icon, and then select **Shut Down**.
- Press and hold the power button for at least 5 seconds.
- Disconnect the computer from external power.
- On models with a user-replaceable battery, remove the battery.

7 Maintaining your computer

It is important to perform regular maintenance to keep your computer in optimal condition. This chapter explains how to use tools like Disk Defragmenter and Disk Cleanup. It also provides instructions for updating programs and drivers, steps to clean the computer, and tips for traveling with (or shipping) the computer.

Improving performance

You can improve the performance of your computer by performing regular maintenance tasks with tools such as Disk Defragmenter and Disk Cleanup.

Using Disk Defragmenter

HP recommends using Disk Defragmenter to defragment your hard drive at least once a month.

NOTE: It is not necessary to run Disk Defragmenter on solid-state drives.

To run Disk Defragmenter:

1. Connect the computer to AC power.
2. From the Start screen, type `defragment`, and then select **Defragment and optimize your drives**.
3. Follow the on-screen instructions.

For additional information, access the Disk Defragmenter software Help.

Using Disk Cleanup

Use Disk Cleanup to search the hard drive for unnecessary files that you can safely delete to free up disk space and help the computer run more efficiently.

To run Disk Cleanup:

1. From the Start screen, type `disk`, and then select one of the following:
   - **Free up disk space on this PC**
   - **Uninstall apps to free up disk space**
   - **Free up disk space by deleting uncessary files**
2. Follow the on-screen instructions.

Updating programs and drivers

HP recommends that you update your programs and drivers on a regular basis. Updates can resolve issues and bring new features and options to your computer. For example, older graphics components might not work well with the most recent gaming software. Without the latest driver, you would not be getting the most out of your equipment.

Go to http://www.hp.com/support to download the latest versions of HP programs and drivers. In addition, register to receive automatic notifications when updates become available.

If you would like to update your programs and drivers, follow these instructions:

1. From the Start screen, type `support`, and then select the **HP Support Assistant** app.

   -or-

   From the Windows desktop, click the question mark icon in the notification area, at the far right of the taskbar.

2. Click **Updates and tune-ups**, and then click **Check for HP updates now**.
3. Follow the on-screen instructions.

Cleaning your computer

Use the following products to safely clean your computer:

- Dimethyl benzyl ammonium chloride 0.3 percent maximum concentration (for example, disposable wipes, which come in a variety of brands)
- Alcohol-free glass-cleaning fluid
- Solution of water and mild soap
- Dry microfiber cleaning cloth or a chamois (static-free cloth without oil)
- Static-free cloth wipes

⚠ CAUTION: Avoid strong cleaning solvents that can permanently damage your computer. If you are not sure that a cleaning product is safe for your computer, check the product contents to make sure that ingredients such as alcohol, acetone, ammonium chloride, methylene chloride, and hydrocarbons are not included in the product.

Fibrous materials, such as paper towels, can scratch the computer. Over time, dirt particles and cleaning agents can get trapped in the scratches.

Cleaning procedures

Follow the procedures in this section to safely clean your computer.

⚠ WARNING! To prevent electric shock or damage to components, do not attempt to clean your computer while it is on.

1. Turn off the computer.
2. Disconnect AC power.
3. Disconnect all powered external devices.

⚠ CAUTION: To prevent damage to internal components, do not spray cleaning agents or liquids directly on any computer surface. Liquids dripped on the surface can permanently damage internal components.

Cleaning the display

Gently wipe the display using a soft, lint-free cloth moistened with an alcohol-free glass cleaner. Be sure that a display is dry before you close the computer.

Cleaning the sides or cover

To clean the sides or cover, use a soft microfiber cloth or chamois moistened with one of the cleaning solutions listed previously, or use an acceptable disposable wipe.

NOTE: When cleaning the cover of the computer, use a circular motion to aid in removing dirt and debris.

Cleaning the TouchPad, keyboard, or mouse (select models only)

WARNING! To reduce the risk of electric shock or damage to internal components, do not use a vacuum cleaner attachment to clean the keyboard. A vacuum cleaner can deposit household debris on the keyboard surface.

CAUTION: To prevent damage to internal components, do not allow liquids to drip between the keys.

- To clean the TouchPad, keyboard, or mouse, use a soft microfiber cloth or a chamois moistened with one of the cleaning solutions listed previously or use an acceptable disposable wipe.
- To prevent keys from sticking and to remove dust, lint, and particles from the keyboard, use a can of compressed air with a straw extension.

Traveling with or shipping your computer

If you have to travel with or ship your computer, follow these tips to keep your equipment safe.

- Prepare the computer for traveling or shipping:
  - Back up your information to an external drive.
  - Remove all discs and all external media cards, such as memory cards.
  - Turn off and then disconnect all external devices.
  - Shut down the computer.
- Take along a backup of your information. Keep the backup separate from the computer.
- When traveling by air, carry the computer as hand luggage; do not check it in with the rest of your luggage.

  CAUTION: Avoid exposing a drive to magnetic fields. Security devices with magnetic fields include airport walk-through devices and security wands. Airport conveyer belts and similar security devices that check carry-on baggage use X-rays instead of magnetism and do not damage drives.
- If you plan to use the computer during a flight, listen for the in-flight announcement that tells you when you are allowed to use your computer. In-flight computer use is at the discretion of the airline.
- If you are shipping the computer or a drive, use suitable protective packaging and label the package “FRAGILE.”
- The use of wireless devices may be restricted in some environments. Such restrictions may apply aboard aircraft, in hospitals, near explosives, and in hazardous locations. If you are uncertain of the policy that applies to the use of a wireless device in your computer, ask for authorization to use your computer before you turn it on.
- If you are traveling internationally, follow these suggestions:

- Check the computer-related customs regulations for each country or region on your itinerary.
- Check the power cord and adapter requirements for each location in which you plan to use the computer. Voltage, frequency, and plug configurations vary.

⚠ **WARNING!** To reduce the risk of electric shock, fire, or damage to the equipment, do not attempt to power the computer with a voltage converter kit sold for appliances.

8 Securing your computer and information

Computer security is essential for protecting the confidentiality, integrity, and availability of your information. Standard security solutions provided by the Windows operating system, HP applications, the non-Windows Setup Utility (BIOS), and other third-party software can help protect your computer from a variety of risks, such as viruses, worms, and other types of malicious code.

IMPORTANT: Some security features listed in this chapter may not be available on your computer.

Using passwords

A password is a group of characters that you choose to secure your computer information and to protect online transactions. Several types of passwords can be set. For example, when you set up your computer for the first time, you were asked to create a user password to secure your computer. Additional passwords can be set in Windows or in the HP Setup Utility (BIOS) that is preinstalled on your computer.

You may find it helpful to use the same password for a Setup Utility (BIOS) feature and for a Windows security feature.

To create and save passwords, use the following tips:

- To reduce the risk of being locked out of the computer, record each password and store it in a secure place away from the computer. Do not store passwords in a file on the computer.
- When creating passwords, follow requirements set by the program.
- Change your passwords at least every 3 months.
- An ideal password is long and has letters, punctuation, symbols, and numbers.
- Before you send your computer for service, back up your files, delete confidential files, and then remove all password settings.

For additional information about Windows passwords, such as screen-saver passwords:

▲ From the Start screen, type `support`, and then select the **HP Support Assistant** app.

-or-

From the Windows desktop, click the question mark icon in the notification area, at the far right of the taskbar.

Setting Windows passwords

Password	Function
User password	Protects access to a Windows user account.
Administrator password	Protects administrator-level access to computer contents. **NOTE:** This password cannot be used to access Setup Utility (BIOS) contents.

Setting Setup Utility (BIOS) passwords

Password	Function
Administrator password	• Must be entered each time you access Setup Utility (BIOS). • If you forget your administrator password, you cannot access Setup Utility (BIOS).
Power-on password	• Must be entered each time you turn on or restart the computer. • If you forget your power-on password, you cannot turn on or restart the computer.

To set, change, or delete an administrator or power-on password in Setup Utility (BIOS):

NOTE: If you have tablet with a detachable keyboard or keyboard dock, attach it before beginning these steps.

1. Start Setup Utility (BIOS):

   Turn on or restart the computer, quickly press esc, and then press f10.

2. Use the arrow keys to select **Security**, and then follow the on-screen instructions.

Your changes take effect when the computer restarts.

Using the fingerprint reader (select models only)

Integrated fingerprint readers are available on select computer models.

NOTE: For the location of the fingerprint reader on your computer, see Identifying components on page 5.

To use the fingerprint reader, you must set up a user account and password on the computer and then register one or more fingerprints using HP SimplePass software.

To register fingerprints with HP SimplePass:

1. Swipe a finger on the fingerprint sensor to launch HP SimplePass.

   – or –

   From the Start screen, type `simple`, and then select **HP SimplePass**.

2. When the HP SimplePass welcome screen is revealed, click **Get Started**.
3. HP SimplePass prompts you to swipe your right index finger over the sensor.
4. Swipe your finger 3 times to finish the registration.

   If registration is successful, a green circle appears on the corresponding finger in the illustration.

5. Repeat steps 1 through 4 to register an additional fingerprint.

Using Internet security software

When you use your computer to access email, a network, or the Internet, you potentially expose your computer to computer viruses, spyware, and other online threats. To help protect your computer,

Internet security software that includes antivirus and firewall features may be preinstalled on your computer as a trial offer. To provide ongoing protection against newly discovered viruses and other security risks, security software must be kept up to date. It is strongly recommended that you upgrade the security software trial offer or purchase the software of your choice in order to fully protect your computer.

Using antivirus software

Computer viruses can disable programs, utilities, or the operating system, or cause them to function abnormally. Antivirus software can detect most viruses, destroy them, and in most cases, repair any damage they have caused.

To provide ongoing protection against newly discovered viruses, antivirus software must be kept up to date.

An antivirus program may be preinstalled on your computer. It is strongly recommended that you use the antivirus program of your choice in order to fully protect your computer.

For more information about computer viruses, from the Start screen, type `support`, and then select the **HP Support Assistant** app, or from the Windows desktop, click the question mark icon in the notification area, at the far right of the taskbar.

Using firewall software

Firewalls are designed to prevent unauthorized access to a system or network. A firewall can be software you install on your computer and/or network, or it can be a combination of both hardware and software.

There are two types of firewalls to consider:

- Host-based firewalls—Software that protects only the computer it is installed on.
- Network-based firewalls—Installed between your DSL or cable modem and your home network to protect all the computers on the network.

When a firewall is installed on a system, all data sent to and from the system is monitored and compared with a set of user-defined security criteria. Any data that does not meet those criteria is blocked.

Installing software updates

HP, Windows, and third-party software installed on your computer should be regularly updated to correct security problems and improve software performance. For more information, see Updating programs and drivers on page 37.

Installing critical security updates

⚠ CAUTION: Microsoft sends out alerts regarding critical updates. To protect the computer from security breaches and computer viruses, install all critical updates from Microsoft as soon as you receive an alert.

You can install these updates manually or automatically.

To view or change the settings:

1. From the Start screen, type `control panel`.

   – or –

From the Windows desktop, right-click the **Start** button, and then select **Control Panel**.

2. Select **System and Security**, select **Windows Update**, select **Change settings**, and then follow the on-screen instructions.

Securing your wireless network

When you set up a WLAN or access an existing WLAN, always enable security features to protect your network from unauthorized access. WLANs in public areas (hotspots) like coffee shops and airports may not provide any security.

Backing up your software applications and information

Regularly back up your software applications and information to protect them from being permanently lost or damaged through a virus attack or a software or hardware failure. For more information, see Backing up, restoring, and recovering on page 49.

Using an optional security cable lock

A security cable lock, purchased separately, is designed to act as a deterrent, but it may not prevent the computer from being mishandled or stolen. Security cable locks are only one of several methods that should be employed as part of a complete security solution to help maximize theft protection.

The security cable slot on your computer may look slightly different from the illustration in this section. For the location of the security cable slot on your computer, see Getting to know your computer on page 4.

1. Loop the security cable lock around a secured object.
2. Insert the key **(1)** into the security cable lock **(2)**.
3. Insert the security cable lock into the security cable slot on the computer **(3)**, and then lock the security cable lock with the key.

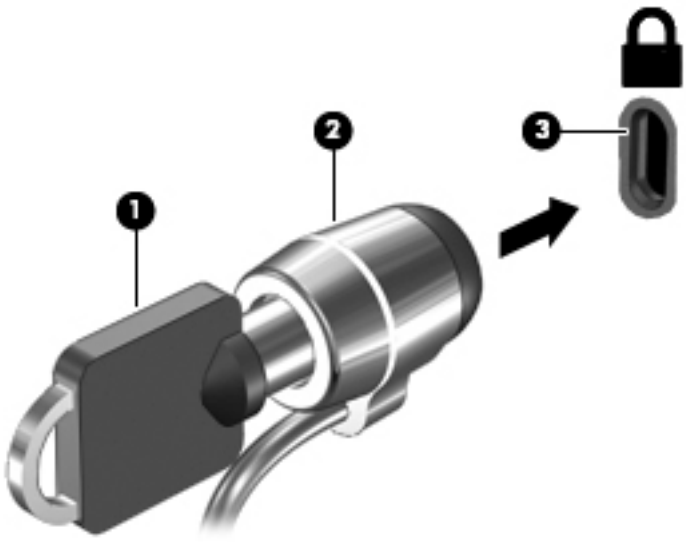

4. Remove the key and keep it in a safe place.

9 Using Setup Utility (BIOS)

Setup Utility, or Basic Input/Output System (BIOS), controls communication between all the input and output devices on the system (such as disk drives, display, keyboard, mouse, and printer). Setup Utility (BIOS) includes settings for the types of devices installed, the startup sequence of the computer, and the amount of system and extended memory.

Starting Setup Utility (BIOS)

CAUTION: Use extreme care when making changes in Setup Utility (BIOS). Errors can prevent the computer from operating properly.

NOTE: If you have tablet with a detachable keyboard or keyboard dock, attach it before beginning these steps.

▲ Turn on or restart the computer, quickly press esc, and then press f10.

Updating the BIOS

Updated versions of the BIOS may be available on the HP website.

Most BIOS updates on the HP website are packaged in compressed files called *SoftPaqs*.

Some download packages contain a file named Readme.txt, which contains information regarding installing and troubleshooting the file.

Determining the BIOS version

To determine whether available BIOS updates contain later BIOS versions than the one currently installed on the computer, you need to know the version of the system BIOS that is installed.

BIOS version information (also known as *ROM date* and *System BIOS*) can be revealed by pressing fn+esc (if you are already in Windows) or by using Setup Utility (BIOS).

1. Start Setup Utility (BIOS) (see Starting Setup Utility (BIOS) on page 45).
2. Use the arrow keys to select **Main**, and then make note of your BIOS version.

To exit Setup Utility (BIOS):

1. Use the arrow keys to select **Exit**, select **Exit Discarding Changes**, and then press **enter**.
2. Select **Yes**.

Downloading a BIOS update

CAUTION: To reduce the risk of damage to the computer or an unsuccessful installation, download and install a BIOS update only when the computer is connected to reliable external power using the AC adapter. Do not download or install a BIOS update while the computer is running on battery power, docked in an optional docking device, or connected to an optional power source. During the download and installation, follow these instructions:

- Do not disconnect power from the computer by unplugging the power cord from the AC outlet.
- Do not shut down the computer or initiate Sleep.
- Do not insert, remove, connect, or disconnect any device, cable, or cord.

NOTE: If your computer is connected to a network, consult the network administrator before installing any software updates, especially system BIOS updates.

1. From the Start screen, type `support`, and then select the **HP Support Assistant** app.

   – or –

   From the Windows desktop, click the question mark icon in the notification area, at the far right of the taskbar.
2. Click **Updates and tune-ups**, and then click **Check for HP updates now**.
3. Follow the on-screen instructions.
4. At the download area, follow these steps:
   a. Identify the most recent BIOS update and compare it to the BIOS version currently installed on your computer. If the update is more recent than your BIOS, make a note of the date, name, or other identifier. You may need this information to locate the update later, after it has been downloaded to your hard drive.
   b. Follow the on-screen instructions to download your selection to the hard drive.

      If the update is more recent than your BIOS, make a note of the path to the location on your hard drive where the BIOS update is downloaded. You will need to access this path when you are ready to install the update.

BIOS installation procedures vary. Follow any instructions that appear on the screen after the download is complete. If no instructions appear, follow these steps:

1. From the Start screen, type `file`, and then select **File Explorer**.

   – or –

   From the Windows desktop, right-click the **Start** button, and then select **File Explorer**.
2. Click your hard drive designation. The hard drive designation is typically Local Disk (C:).
3. Using the hard drive path you recorded earlier, open the folder on your hard drive that contains the update.
4. Double-click the file that has an .exe extension (for example, *filename*.exe).

   The BIOS installation begins.
5. Complete the installation by following the on-screen instructions.

NOTE: After a message on the screen reports a successful installation, you can delete the downloaded file from your hard drive.

10 Using HP PC Hardware Diagnostics (UEFI)

HP PC Hardware Diagnostics is a Unified Extensible Firmware Interface (UEFI) that allows you to run diagnostic tests to determine whether the computer hardware is functioning properly. The tool runs outside the operating system so that it can isolate hardware failures from issues that are caused by the operating system or other software components.

To start HP PC Hardware Diagnostics (UEFI):

1. Turn on or restart the computer, quickly press esc, and then press f2.

   The BIOS searches 3 places for the diagnostic tools, in the following order:

   a. Connected USB drive

      NOTE: To download the HP PC Hardware Diagnostics (UEFI) tool to a USB drive, see Downloading HP PC Hardware Diagnostics (UEFI) to a USB device on page 47.

   b. Hard drive

   c. BIOS

2. When the diagnostic tool opens, use the keyboard arrow keys to select the type of diagnostic test you want to run, and then follow the on-screen instructions.

NOTE: If you need to stop a diagnostic test, press esc.

Downloading HP PC Hardware Diagnostics (UEFI) to a USB device

NOTE: Instructions for downloading HP PC Hardware Diagnostics (UEFI) are provided in English only.

There are two options to download HP PC Hardware Diagnostics to a USB device:

Option 1: HP PC Diagnostics homepage— Provides access to the latest UEFI version

1. Go to http://hp.com/go/techcenter/pcdiags.
2. Click the **UEFI Download** link, and then select **Run**.

Option 2: Support and Drivers pages—Provide downloads for a specific product for earlier and later versions

1. Go to http://www.hp.com.
2. Point to **Support**, located at the top of the page, and then click **Download Drivers**.
3. In the text box, enter the product name, and then click **Go**.

   – or –

   Click **Find Now** to let HP automatically detect your product.

4. Select your computer model, and then select your operating system.
5. In the **Diagnostic** section, click **HP UEFI Support Environment**.

   – or –

   Click **Download**, and then select **Run**.

11 Backing up, restoring, and recovering

This chapter provides information about the following processes. The information in the chapter is standard procedure for most models.

- Creating recovery media and backups
- Restoring and recovering your system

For additional information, refer to the HP Support Assistant.

▲ From the Start screen, type `support`, and then select the **HP Support Assistant** app.

- or -

From the Windows desktop, click the question mark icon in the notification area, at the far right of the taskbar.

Creating recovery media and backups (select models only)

- Use HP Recovery Manager after you successfully set up the computer, to create HP Recovery media. This step creates a backup of the HP Recovery partition on the computer. The backup can be used to reinstall the original operating system in cases where the hard drive is corrupted or has been replaced.

  For information on creating recovery media, see Creating HP Recovery media (select models only) on page 49. For information on the recovery options that are available using the recovery media, see Recovering using HP Recovery Manager (select models only) on page 51

- Use Windows tools to create system restore points and create backups of personal information.

Creating HP Recovery media (select models only)

HP Recovery Manager is a software program that allows you to create recovery media after you successfully set up the computer. HP Recovery media can be used to perform system recovery if the hard drive becomes corrupted. System recovery reinstalls the original operating system and the software programs installed at the factory and then configures the settings for the programs. HP Recovery media can also be used to customize the system or restore the factory image if you replace the hard drive.

- Only one set of HP Recovery media can be created. Handle these recovery tools carefully, and keep them in a safe place.
- HP Recovery Manager examines the computer and determines the required storage capacity for the blank USB flash drive or the number of blank DVD discs that will be required.
- To create recovery discs, your computer must have an optical drive with DVD writer capability, and you must use only high-quality blank DVD-R, DVD+R, DVD-R DL, or DVD+R DL discs. Do not use rewritable discs such as CD±RW, DVD±RW, double-layer DVD±RW, or BD-RE (rewritable Blu-ray) discs; they are not compatible with HP Recovery Manager software. Or, instead, you can use a high-quality blank USB flash drive.
- If your computer does not include an integrated optical drive with DVD writer capability, but you would like to create DVD recovery media, you can use an external optical drive (purchased separately) to create recovery discs, or you can obtain recovery discs for your computer from

support. See the *Worldwide Telephone Numbers* booklet included with the computer. You can also find contact information from the HP website. Go to http://www.hp.com/support, select your country or region, and follow the on-screen instructions. If you use an external optical drive, it must be connected directly to a USB port on the computer; the drive cannot be connected to a USB port on an external device, such as a USB hub.

- Be sure that the computer is connected to AC power before you begin creating the recovery media.
- The creation process can take an hour or more. Do not interrupt the creation process.
- If necessary, you can exit the program before you have finished creating all of the recovery DVDs. HP Recovery Manager will finish burning the current DVD. The next time you start HP Recovery Manager, you will be prompted to continue, and the remaining discs will be burned.

To create HP Recovery media:

1. From the Start screen, type `recovery`, and then select **HP Recovery Manager**.
2. Select **Recovery Media Creation**, and then follow the on-screen instructions.

If you ever need to recover the system, see Recovering using HP Recovery Manager (select models only) on page 51.

Using Windows tools

You can create system restore points and create backups of personal information using Windows tools.

▲ From the Start screen, type `help`, and then select **Help and Support**.

– or –

From the Windows desktop, click the question mark icon in the notification area, at the far right of the taskbar.

For more information and steps, see Help and Support.

Restore and recover (select models only)

There are several options for recovering your system. Choose the method that best matches your situation and level of expertise:

- Windows offers several options for restoring from backup, refreshing the computer, and resetting the computer to its original state. For more information and steps, see Help and Support.

  ▲ From the Start screen, type `help`, and then select **Help and Support**.

  – or –

  From the Windows desktop, click the question mark icon in the notification area, at the far right of the taskbar.

- On select models, if you need to correct a problem with a preinstalled application or driver, use the Drivers and Applications Reinstall option of HP Recovery Manager to reinstall the individual application or driver.

  ▲ From the Start screen, type `recovery`, select **HP Recovery Manager**, select **Drivers and Applications Reinstall**, and then follow the on-screen instructions.

- On select models, if you want to reset your computer using a minimized image, you can choose the HP Minimized Image Recovery option from the HP Recovery partition or HP Recovery media. Minimized Image Recovery installs only drivers and hardware-enabling applications. Other applications included in the image continue to be available for installation through the Drivers and Applications Reinstall option in HP Recovery Manager.

  For more information, see Recovering using HP Recovery Manager (select models only) on page 51.

- On select models, if you want to recover the computer's original factory partitioning and content, you can choose the System Recovery option from the HP Recovery partition or use the HP Recovery media that you have created. For more information, see Recovering using HP Recovery Manager (select models only) on page 51. If you have not already created recovery media, see Creating HP Recovery media (select models only) on page 49.

- On select models, if you have replaced the hard drive, you can use the Factory Reset option of HP Recovery media to restore the factory image to the replacement drive. For more information, see Recovering using HP Recovery Manager (select models only) on page 51.

Recovering using HP Recovery Manager (select models only)

HP Recovery Manager software allows you to recover the computer to its original factory state by using the HP Recovery media that you created or by using the HP Recovery partition (select models only). If you have not already created recovery media, see Creating HP Recovery media (select models only) on page 49.

Using HP Recovery media, you can choose from one of the following recovery options:

- System Recovery—Reinstalls the original operating system, and then configures the settings for the programs that were installed at the factory.
- Minimized Image Recovery (select models only)—Reinstalls the operating system and all hardware-related drivers and software, but not other software applications.
- Factory Reset (select models only)—Restores the computer to its original factory state by deleting all information from the hard drive and re-creating the partitions. Then it reinstalls the operating system and the software that was installed at the factory.

The HP Recovery partition (select models only) allows System Recovery and Minimized Image Recovery.

What you need to know

- HP Recovery Manager recovers only software that was installed at the factory. For software not provided with the computer, you must either download the software from the manufacturer's website or reinstall the software from the media provided by the manufacturer.

  IMPORTANT: Recovery through HP Recovery Manager should be used as a final attempt to correct computer issues.

- HP Recovery media (select models only) must be used if the computer hard drive fails. If you have not already created recovery media, see Creating HP Recovery media (select models only) on page 49.
- To use the Factory Reset option, you must use HP Recovery media (select models only). If you have not already created recovery media, see Creating HP Recovery media (select models only) on page 49.
- If the HP Recovery media (select models only) does not work, you can obtain recovery media for your system from support. See the *Worldwide Telephone Numbers* booklet included with the

computer. You can also find contact information from the HP website. Go to http://www.hp.com/support, select your country or region, and follow the on-screen instructions.

IMPORTANT: HP Recovery Manager does not automatically provide backups of your personal data. Before beginning recovery, back up any personal data you want to retain.

Using the HP Recovery partition (select models only)

The HP Recovery partition (select models only) allows you to perform a system recovery or minimized image recovery without the need for recovery discs or a recovery USB flash drive. This type of recovery can be used only if the hard drive is still working.

To start HP Recovery Manager from the HP Recovery partition:

1. From the Start screen, type `recovery`, select **Recovery Manager**, and then select **HP Recovery Environment**.
2. Select **Troubleshoot** from the boot options menu.
3. Select **Recovery Manager**, and then follow the on-screen instructions.

Using HP Recovery media to recover

You can use HP Recovery media to recover the original system. This method can be used if your system does not have an HP Recovery partition or if the hard drive is not working properly.

1. If possible, back up all personal files.
2. Insert the HP Recovery media that you created, and then restart the computer.

   NOTE: If the computer does not automatically restart in HP Recovery Manager, change the computer boot order. See Changing the computer boot order on page 52.

3. Follow the on-screen instructions.

Changing the computer boot order

If the computer does not restart in HP Recovery Manager, you can change the computer boot order, which is the order of devices where the computer searches for startup information. You can specify that an optical drive or a USB flash drive should be checked first.

To change the boot order:

1. Insert the HP Recovery media you created.
2. Restart the computer, quickly press esc, and then press f9 for boot options.
3. Select the optical drive or USB flash drive you want to boot from.
4. Follow the on-screen instructions.

12 Specifications

Input power

The power information in this section may be helpful if you plan to travel internationally with the computer.

The computer operates on DC power, which can be supplied by an AC or a DC power source. The AC power source must be rated at 100–240 V, 50–60 Hz. Although the computer can be powered from a standalone DC power source, it should be powered only with an AC adapter or a DC power source that is supplied and approved by HP for use with this computer.

The computer can operate on DC power within the following specifications. Operating voltage and current varies by platform.

Input power	Rating
Operating voltage and current	15 V @ 4.33 A - 65 W

NOTE: This product is designed for IT power systems in Norway with phase-to-phase voltage not exceeding 240 V rms.

NOTE: The computer operating voltage and current can be found on the system regulatory label.

Operating environment

Factor	Metric	U.S.
Temperature		
Operating	**5°C to 35°C**	41°F to 95°F
Nonoperating	**-20°C to 60°C**	-4°F to 140°F
Relative humidity (noncondensing)		
Operating	**10% to 90%**	10% to 90%
Nonoperating	**5% to 95%**	5% to 95%
Maximum altitude (unpressurized)		
Operating	**-15 m to 3,048 m**	-50 ft to 10,000 ft
Nonoperating	**-15 m to 12,192 m**	-50 ft to 40,000 ft

13 Electrostatic Discharge

Electrostatic discharge is the release of static electricity when two objects come into contact—for example, the shock you receive when you walk across the carpet and touch a metal door knob.

A discharge of static electricity from fingers or other electrostatic conductors may damage electronic components. To prevent damage to the computer, damage to a drive, or loss of information, observe these precautions:

- If removal or installation instructions direct you to unplug the computer, first be sure that it is properly grounded.
- Keep components in their electrostatic-safe containers until you are ready to install them.
- Avoid touching pins, leads, and circuitry. Handle electronic components as little as possible.
- Use nonmagnetic tools.
- Before handling components, discharge static electricity by touching an unpainted metal surface.
- If you remove a component, place it in an electrostatic-safe container.

Index

A

AC adapter light, identifying 5
AC adapter, testing 35
accessory battery connector, identifying 5
action keys 11
  identifying 5
airplane mode key 5, 12
antivirus software, using 43
audio-in (microphone), identifying 5
audio-out (headphone), identifying 5
audio-out (headphone)/audio-in (microphone) jack, identifying 6

B

backing up software and information 44
backups 49
battery
  conserving power 33
  discharging 33
  disposing 34
  factory-sealed 31
  finding information 32
  resolving low battery level 33
  storing 33
  user-replaceable 32
battery bay, identifying 6
battery information, finding 32
battery lock, identifying 6
battery power 31
battery release latch, identifying 6
battery temperature 33
bay, battery 6
Beats Audio 20
Beats Audio Control Panel 20
Beats Audio hot key 20
best practices 1
BIOS
  determining version 45
  downloading an update 46
  starting the Setup Utility 45
  updating 45
Bluetooth compartment, identifying 6
Bluetooth device 14, 16
Bluetooth label 13
boot order
  changing 52
bottom 13
buttons
  left TouchPad 7
  power 7
  right TouchPad 8

C

caps lock light, identifying 6
caring for your computer 38
cleaning your computer 38
components 5
computer, traveling 33
connecting to a WLAN 15
connector, power 8
control zone
  left 7
  right 8
corporate WLAN connection 15
critical security updates, installing 43

D

deleted files, restoring 50
Disk Cleanup software 37
Disk Defragmenter software 37
DisplayPort
  connecting 23
  identifying 6
docking connector, identifying 6

E

electrostatic discharge 55
esc key, identifying 6
external AC power, using 34
external monitor port 21
external monitor port, identifying 6

F

fingerprint reader
  identifying 6
  using 42
fingerprints, registering 42
firewall software 43
fn key, identifying 6

G

getting to know your computer 4

H

hard drive light, identifying 7
HDMI port
  connecting 21
  identifying 7
HDMI, configuring audio 22
headphones, connecting 19
headsets, connecting 20
Hibernation
  exiting 30
  initiating 30
high-definition devices, connecting 21, 23, 24
HP Apps Store, visiting 1
HP PC Hardware Diagnostics (UEFI)
  downloading 47
HP Recovery Manager
  correcting boot problems 52
  starting 52
HP Recovery media
  creating 49
  recovery 52
HP Recovery partition
  recovery 52
HP resources 2
HP Triple Bass Reflex Subwoofer, identifying 7

I

initiating Sleep and Hibernation 29
input power 53

installing
critical security updates 43
optional security cable lock 44
integrated numeric keypad, identifying 7
internal display switch, identifying 7
internal microphones, identifying 7
Internet security software, using 42

J
jacks
audio-in (microphone) 5
audio-out (headphone) 5
audio-out (headphone)/audio-in (microphone) 6
network 8
RJ-45 (network) 8

K
keyboard and mouse, using 28
keys
action 5
airplane mode 5, 12
esc 6
fn 6
num lock 7
Windows 10
Windows applications 10

L
labels
Bluetooth 13
Microsoft Certificate of Authenticity 13
regulatory 13
serial number 12
service 12
wireless certification 13
WLAN 13
latches
battery release 6
service door release 9
left control zone, identifying 7
left-edge swipe TouchPad and touch screen gesture 27
lights
AC adapter 5
caps lock 6
hard drive 7
mute 7
power 8
RJ-45 (network) status 8
TouchPad 9
webcam 10
wireless 10
locating information
hardware 4
software 4

M
maintenance
Disk Cleanup 37
Disk Defragmenter 37
updating programs and drivers 37
memory card reader, identifying 7
memory card, identifying 7
microphone, connecting 20
minimized image recovery 52
minimized image, creating 51
Miracast 24
mouse, external
setting preferences 25
mute light, identifying 7

N
network jack, identifying 8
num lock key, identifying 7

O
one-finger slide touch screen gesture 27
operating environment 54
optical drive, identifying 7
original system recovery 51

P
passwords
Setup Utility (BIOS) 42
Windows 41
ports
DisplayPort 6
external monitor 6, 21
HDMI 7, 21, 23
Miracast 24
USB 2.0 9
USB 2.0 charging (powered) 9
USB 3.0 9
USB 3.0 (powered) charging 9
VGA 21
power
AC 34
battery 31
power button
identifying 7
power connector, identifying 8
power lights, identifying 8
power meter, using 31
power settings, using 31
product name and number, computer 12
public WLAN connection 15

R
recover
options 50
recovery
discs 49, 52
HP Recovery Manager 51
media 52
starting 52
supported discs 49
system 51
USB flash drive 52
using HP Recovery media 50
recovery media
creating 49
creating using HP Recovery Manager 50
regulatory information
regulatory label 13
wireless certification labels 13
right control zone, identifying 8
right-edge swipe TouchPad and touch screen gesture 26
RJ-45 (network) jack, identifying 8
RJ-45 (network) status lights, identifying 8

S
security cable lock, installing 44
security cable slot, identifying 8
serial number 12
serial number, computer 12
service door release latch 9

service door, identifying 8
service labels, locating 12
setting password protection on wakeup 30
Setup Utility (BIOS) passwords 42
sharing media 17
shipping the computer 39
shutdown 35
SIM slot, identifying 9
Sleep
exiting 30
initiating 30
Sleep and Hibernation
initiating 29
slots
memory card reader 7
security cable 8
SIM 9
software
Disk Cleanup 37
Disk Defragmenter 37
software updates, installing 43
speakers
connecting 19
identifying 9
Starting right 1
storing a battery 33
supported discs, recovery 49
system recovery 51
system restore point
creating 50
system restore point, creating 49

T

tap TouchPad and touch screen gesture 25
temperature 33
testing an AC adapter 35
top-edge swipe and bottom-edge swipe TouchPad and touch screen gesture 27
touch screen gesture, one-finger slide 27
TouchPad
using 25
TouchPad and touch screen gestures
left-edge swipe 27
right-edge swipe 26
tap 25
top-edge swipe and bottom-edge swipe 27
two-finger click 26
two-finger pinch/zoom 26
two-finger scroll 25
TouchPad light, identifying 9
TouchPad zone, identifying 9
TouchPad, buttons 7, 8
traveling with the computer 13, 33, 39
turning off the computer 35
two-finger click TouchPad and touch screen gesture 26
two-finger pinch/zoom TouchPad and touch screen gesture 26
two-finger scroll TouchPad and touch screen gesture 25

U

unresponsive system 35
updating programs and drivers 37
USB 2.0 charging (powered) port, identifying 9
USB 2.0 port, identifying 9
USB 3.0 charging (powered) port, identifying 9
USB 3.0 port, identifying 9
using a keyboard and mouse 28
using external AC power 34
using passwords 41
using the TouchPad 25

V

vents, identifying 9
VGA port, connecting 21
video 20

W

webcam
identifying 10
using 19
webcam light, identifying 10
Windows
system restore point 49, 50
Windows applications key, identifying 10
Windows key, identifying 10
Windows passwords 41
Windows tools
using 50
Wireless Assistant software 14
wireless button 14
wireless certification label 13
wireless controls
button 14
operating system 14
Wireless Assistant software 14
wireless light 10, 14
wireless network (WLAN)
connecting 15
corporate WLAN connection 15
functional range 16
public WLAN connection 15
wireless network, securing 44
WLAN antennas, identifying 10
WLAN device 13
WLAN label 13
WWAN antennas, identifying 10
WWAN device 16