FCC SAR Test Report

APPLICANT	:	Hewlett-Packard Company
EQUIPMENT	:	Tablet PC
BRAND NAME	:	HP
MODEL NAME	:	HSTNN-I19C
FCC ID	:	B94HNI19CHW736
STANDARD	:	FCC 47 CFR Part 2 (2.1093) ANSI/IEEE C95.1-1992 IEEE 1528-2003

We, SPORTON INTERNATIONAL INC., would like to declare that the tested sample has been evaluated in accordance with the procedures and shown the compliance with the applicable technical standards.

The test results in this report apply exclusively to the tested model / sample. Without written approval of SPORTON INTERNATIONAL INC., the test report shall not be reproduced except in full.

Reviewed by: Eric Huang / Deputy Manager

Approved by: Jones Tsai / Manager

Testing Laboratory
1190

SPORTON INTERNATIONAL INC.
No. 52, Hwa Ya 1st Rd., Hwa Ya Technology Park, Kwei-Shan Hsiang, Tao Yuan Hsien, Taiwan, R.O.C.

Table of Contents

1. Statement of Compliance **4**
2. Administration Data **4**
3. Guidance Standard **4**
4. Equipment Under Test (EUT) **5**
4.1 General Information 5
4.2 Maximum Tune-up Limit 6
5. Proximity Sensor Triggering Test **6**
6. RF Exposure Limits **9**
6.1 Uncontrolled Environment 9
6.2 Controlled Environment 9
7. Specific Absorption Rate (SAR) **10**
7.1 Introduction 10
7.2 SAR Definition 10
8. System Description and Setup **11**
9. Measurement Procedures **12**
9.1 Spatial Peak SAR Evaluation 12
9.2 Power Reference Measurement 13
9.3 Area Scan 13
9.4 Zoom Scan 14
9.5 Volume Scan Procedures 14
9.6 Power Drift Monitoring 14
10. Test Equipment List **15**
11. System Verification **16**
11.1 Tissue Verification 16
11.2 System Performance Check Results 17
12. RF Exposure Positions **17**
12.1 SAR Testing for Tablet 17
13. Conducted RF Output Power (Unit: dBm) **18**
14. Antenna Location **22**
15. SAR Test Results **25**
15.1 Body SAR 25
15.2 Repeated SAR Measurement 27
16. Simultaneous Transmission Analysis **28**
16.1 Body Exposure Conditions 29
16.2 SPLSR Evaluation and Analysis 37
17. Uncertainty Assessment **41**
18. References **43**
Appendix A. Plots of System Performance Check
Appendix B. Plots of High SAR Measurement
Appendix C. DASY Calibration Certificate
Appendix D. Test Setup Photos

Revision History

REPORT NO.	VERSION	DESCRIPTION	ISSUED DATE
FA441846	Rev. 01	Initial issue of report	May 28, 2014

1. Statement of Compliance

The maximum results of Specific Absorption Rate (SAR) found during testing for **Hewlett-Packard Company, Tablet PC, HSTNN-I19C**, are as follows.

Equipment Class	Frequency Band	Highest SAR Summary	
		Body 1g SAR (W/kg)	Simultaneous Transmission 1g SAR (W/kg)
PCB	GSM850	0.97	1.59
	GSM1900	1.06	
	WCDMA Band V	**1.39**	
	WCDMA Band IV	0.93	
	WCDMA Band II	1.11	
Date of Testing:		04/30/2014 ~ 05/01/2014	

This device is in compliance with Specific Absorption Rate (SAR) for general population/uncontrolled exposure limits (1.6 W/kg) specified in FCC 47 CFR part 2 (2.1093) and ANSI/IEEE C95.1-1992, and had been tested in accordance with the measurement methods and procedures specified in IEEE 1528-2003.

2. Administration Data

Testing Laboratory	
Test Site	SPORTON INTERNATIONAL INC.
Test Site Location	No. 52, Hwa Ya 1st Rd., Hwa Ya Technology Park, Kwei-Shan Hsiang, Tao Yuan Hsien, Taiwan, R.O.C. TEL: +886-3-327-3456 FAX: +886-3-328-4978
Applicant	
Company Name	Hewlett-Packard Company
Address	3000 Hanover Street, Palo Alto, California 94304, USA
Manufacturer	
Company Name	Inventec Corporation
Address	Inventec Building, No.66 Hou-Kang Street Shilin District, Taipei 11170, Taiwan

3. Guidance Standard

The Specific Absorption Rate (SAR) testing specification, method, and procedure for this device is in accordance with the following standards:

- FCC 47 CFR Part 2 (2.1093)
- ANSI/IEEE C95.1-1992
- IEEE 1528-2003
- FCC KDB 865664 D01 SAR Measurement 100 MHz to 6 GHz v01r03
- FCC KDB 865664 D02 SAR Reporting v01r01
- FCC KDB 447498 D01 General RF Exposure Guidance v05r02
- FCC KDB 616217 D04 SAR for laptop and tablets v01r01
- FCC KDB 941225 D01 SAR test for 3G devices v02
- FCC KDB 941225 D02 HSPA and 1x Advanced v02r02
- FCC KDB 941225 D03 SAR Test Reduction GSM GPRS EDGE v01

4. Equipment Under Test (EUT)

4.1 General Information

Product Feature & Specification	
Equipment Name	Tablet PC
Brand Name	HP
Model Name	HSTNN-I19C
Integrated WWAN Module	Brand Name: HUAWEI Model Name: MU736
FCC ID	B94HNI19CHW736
IMEI Code	355870052437644
Wireless Technology and Frequency Range	GSM850: 824.2 MHz ~ 848.8 MHz GSM1900: 1850.2 MHz ~ 1909.8 MHz WCDMA Band V: 826.4 MHz ~ 846.6 MHz WCDMA Band IV: 1712.4 MHz ~ 1752.6 MHz WCDMA Band II: 1852.4 MHz ~ 1907.6 MHz
Mode	・GPRS/EGPRS ・RMC 12.2Kbps ・HSDPA ・HSUPA
EUT Stage	Identical Prototype

Remark:
1. The above EUT's information is declared by manufacturer. Please refer to the specifications or user's manual for more detailed description.
2. The below table WLAN modules are also integrated into this host and the 2.4GHz WLAN and Bluetooth SAR testing results are also used perform transmission simultaneous analysis.

WLAN Module Information		
Integrated Module 1	Brand Name	Broadcom
	Model Name	BCM943142Y
	FCC ID	QDS-BRCM1079
	Report No	FA440180
	Mode	・802.11 b/g/n ・Bluetooth
Integrated Module 2	Brand Name	Intel
	Model Name	Intel® Dual Band Wireless-AC 3160 (Model 3160NGW)
	FCC ID	PD93160NG
	Report No	SAR.20140503
	Mode	・802.11 a/b/g/n/ac ・Bluetooth
Integrated Module 3	Brand Name	Intel
	Model Name	Intel® Dual Band Wireless-AC 7260 (Model 7260NGW, 7260NGW AN, 7260NGW BN, 7260NGW NB)
	FCC ID	PD97260NG
	Report No	SAR.20140502
	Mode	・802.11 a/b/g/n/ac ・Bluetooth

4.2 Maximum Tune-up Limit

Mode	Burst average power (dBm)			
	GSM 850		GSM 1900	
Output Power Status	Full power mode	Reduced Power mode	Full power mode	Reduced Power mode
GPRS (GMSK, 1 Tx slot)	33.50	29.50	30.50	27.50
GPRS (GMSK, 2 Tx slots)	31.00	27.00	28.00	25.00
EDGE (8PSK, 1 Tx slot)	28.00	28.00	27.00	27.00
EDGE (8PSK, 2 Tx slots)	25.50	25.50	24.50	24.50
EDGE (8PSK, 3 Tx slot)	24.00	24.00	23.00	23.00
EDGE (8PSK, 4 Tx slots)	22.50	22.50	21.50	21.50

Mode	Burst average power (dBm)					
	WCDMA Band V		WCDMA Band II		WCDMA Band IV	
Output Power Status	Full power mode	Reduced Power mode	Full power mode	Reduced Power mode	Full power mode	Reduced Power mode
RMC 12.2K	24.50	21.50	24.50	19.50	24.50	19.50
HSDPA Subtest-1	24.50	21.50	24.50	19.50	24.50	19.50
HSUPA Subtest-5	24.50	21.50	24.50	19.50	24.50	19.50

5. Proximity Sensor Triggering Test

Proximity sensor power reduction

Exposure Position / wireless mode	Bottom Face(1)	Edge 1(1)	Curved surface of Edge1(1)	Edge 2	Edge 3	Edge 4
GSM850 GPRS (GMSK 1 Tx slot) - CS1	4.0 dB	4.0 dB	4.0 dB	0 dB	0 dB	0 dB
GSM850 GPRS (GMSK 2 Tx slot) - CS1	4.0 dB	4.0 dB	4.0 dB			
GSM850 EDGE (8PSK 1 Tx slot) - MCS5	0.0 dB	0.0 dB	0.0 dB			
GSM850 EDGE (8PSK 2 Tx slot) - MCS5	0.0 dB	0.0 dB	0.0 dB			
GSM850 EDGE (8PSK 3 Tx slot) - MCS5	0.0 dB	0.0 dB	0.0 dB			
GSM850 EDGE (8PSK 4 Tx slot) - MCS5	0.0 dB	0.0 dB	0.0 dB			
GSM1900 GPRS (GMSK 1 Tx slot) - CS1	3.0 dB	3.0 dB	3.0 dB			
GSM1900 GPRS (GMSK 2 Tx slot) - CS1	3.0 dB	3.0 dB	3.0 dB			
GSM1900 EDGE (8PSK 1 Tx slot) - MCS5	0.0 dB	0.0 dB	0.0 dB			
GSM1900 EDGE (8PSK 2 Tx slot) - MCS5	0.0 dB	0.0 dB	0.0 dB			
GSM1900 EDGE (8PSK 3 Tx slot) - MCS5	0.0 dB	0.0 dB	0.0 dB			
GSM1900 EDGE (8PSK 4 Tx slot) - MCS5	0.0 dB	0.0 dB	0.0 dB			
WCDMA Band V	3.0 dB	3.0 dB	3.0 dB			
WCDMA Band II	5.0 dB	5.0 dB	5.0 dB			
WCDMA Band IV	5.0 dB	5.0 dB	5.0 dB			

Remark:

1. (1): Reduced maximum limit applied by activation of proximity sensor.
2. Tests were performed in accordance with KDB 616217 D04 section 6.1, 6.2, 6.3, 6.4 and 6.5 and compliant results are shown and described in exhibit "P-Sensor operational description
3. For verification of compliance of power reduction scheme, additional SAR testing with EUT transmitting at full RF power at a conservative trigger distance was performed:
   - Bottom Face: 10 mm
   - Edge1: 10 mm
   - Curved surface of Edge1: 10 mm

Power Measurement during Sensor Trigger distance testing

Band/Mode	Ch #	Measured power reduction (dBm)		Reduction Levels
		w/o power back-off	w/ power back-off	(dB)
GSM850 GPRS (GMSK 2 Tx slot)	251	29.54	26.21	3.33
GSM1900 GPRS (GMSK 2 Tx slot)	512	26.60	24.16	2.44
WCDMA Band V (RMC 12.2Kbps)	4132	23.01	20.97	2.04
WCDMA Band IV (RMC 12.2Kbps)	1312	23.24	19.02	4.22
WCDMA Band II (RMC 12.2Kbps)	9400	23.50	19.22	4.28

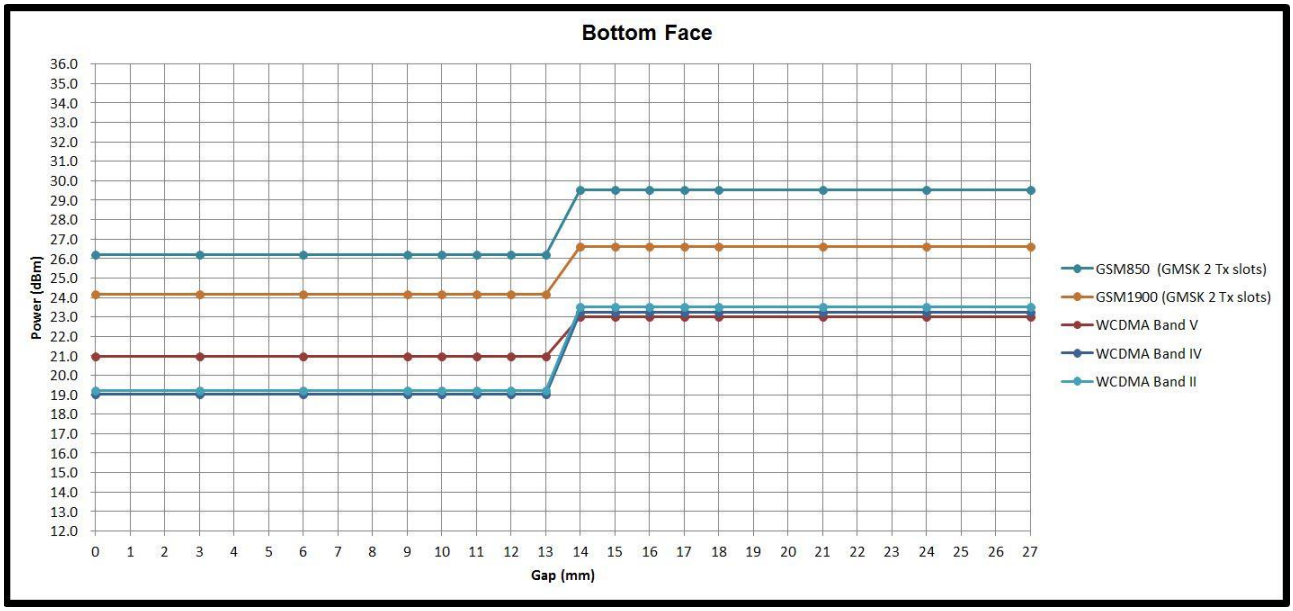

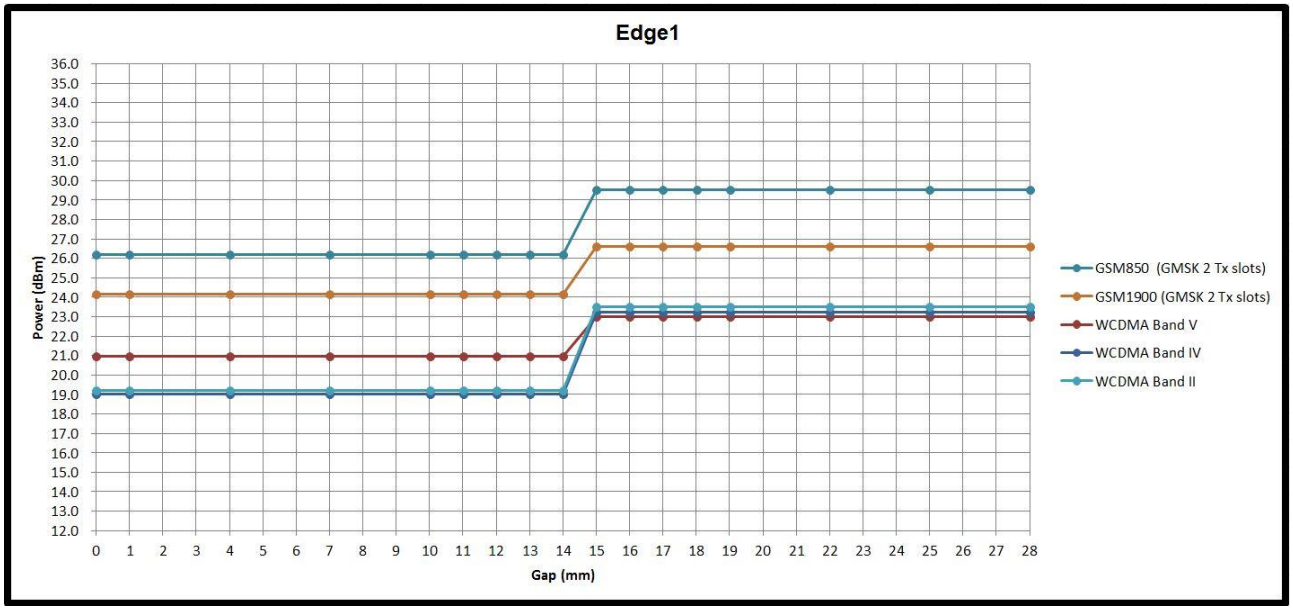

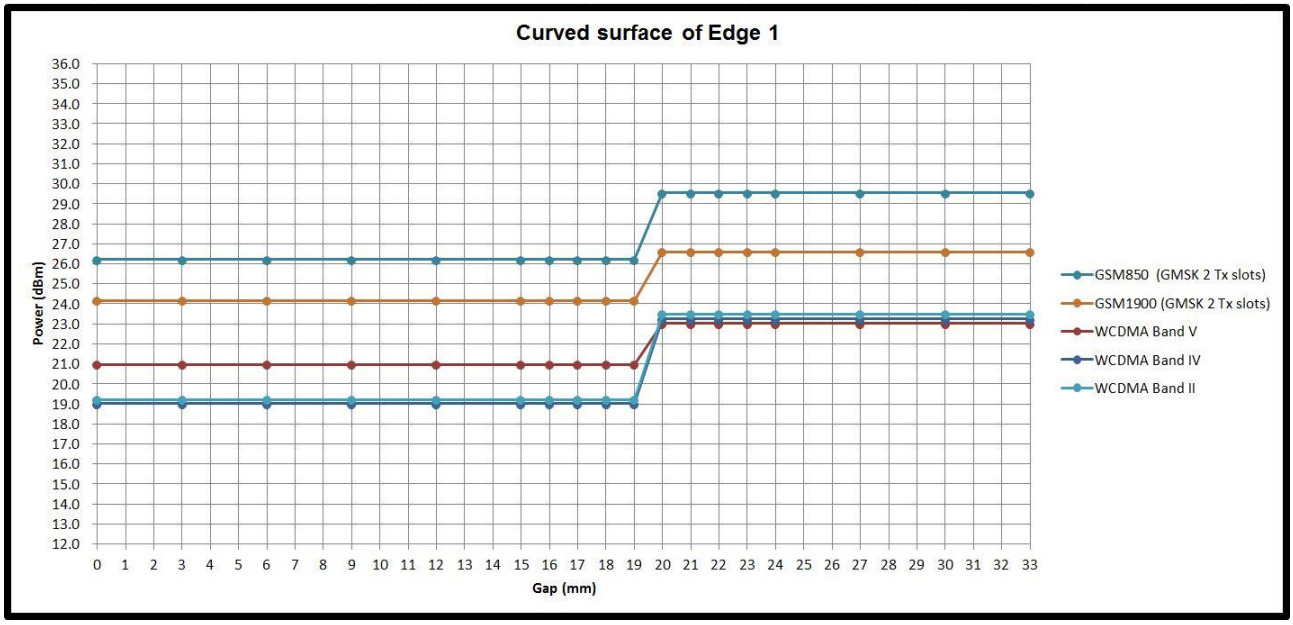
Curved surface of Edge 1
Power (dBm)
Gap (mm)
GSM850 (GMSK 2 Tx slots)
GSM1900 (GMSK 2 Tx slots)
WCDMA Band V
WCDMA Band IV
WCDMA Band II

6. RF Exposure Limits

6.1 Uncontrolled Environment

Uncontrolled Environments are defined as locations where there is the exposure of individuals who have no knowledge or control of their exposure. The general population/uncontrolled exposure limits are applicable to situations in which the general public may be exposed or in which persons who are exposed as a consequence of their employment may not be made fully aware of the potential for exposure or cannot exercise control over their exposure. Members of the general public would come under this category when exposure is not employment-related; for example, in the case of a wireless transmitter that exposes persons in its vicinity.

6.2 Controlled Environment

Controlled Environments are defined as locations where there is exposure that may be incurred by persons who are aware of the potential for exposure, (i.e. as a result of employment or occupation). In general, occupational/controlled exposure limits are applicable to situations in which persons are exposed as a consequence of their employment, who have been made fully aware of the potential for exposure and can exercise control over their exposure. The exposure category is also applicable when the exposure is of a transient nature due to incidental passage through a location where the exposure levels may be higher than the general population/uncontrolled limits, but the exposed person is fully aware of the potential for exposure and can exercise control over his or her exposure by leaving the area or by some other appropriate means.

Limits for Occupational/Controlled Exposure (W/kg)

Whole-Body	Partial-Body	Hands, Wrists, Feet and Ankles
0.4	8.0	20.0

Limits for General Population/Uncontrolled Exposure (W/kg)

Whole-Body	Partial-Body	Hands, Wrists, Feet and Ankles
0.08	1.6	4.0

1. Whole-Body SAR is averaged over the entire body, partial-body SAR is averaged over any 1gram of tissue defined as a tissue volume in the shape of a cube. SAR for hands, wrists, feet and ankles is averaged over any 10 grams of tissue defined as a tissue volume in the shape of a cube.

7. Specific Absorption Rate (SAR)

7.1 Introduction

SAR is related to the rate at which energy is absorbed per unit mass in an object exposed to a radio field. The SAR distribution in a biological body is complicated and is usually carried out by experimental techniques or numerical modeling. The standard recommends limits for two tiers of groups, occupational/controlled and general population/uncontrolled, based on a person's awareness and ability to exercise control over his or her exposure. In general, occupational/controlled exposure limits are higher than the limits for general population/uncontrolled.

7.2 SAR Definition

The SAR definition is the time derivative (rate) of the incremental energy (dW) absorbed by (dissipated in) an incremental mass (dm) contained in a volume element (dv) of a given density (ρ). The equation description is as below:

$$\mathbf{SAR} = \frac{\mathbf{d}}{\mathbf{dt}}\left(\frac{\mathbf{dW}}{\mathbf{dm}}\right) = \frac{\mathbf{d}}{\mathbf{dt}}\left(\frac{\mathbf{dW}}{\boldsymbol{\rho}\mathbf{dv}}\right)$$

SAR is expressed in units of Watts per kilogram (W/kg)

$$\mathbf{SAR} = \frac{\boldsymbol{\sigma}|\mathbf{E}|^2}{\boldsymbol{\rho}}$$

Where: σ is the conductivity of the tissue, ρ is the mass density of the tissue and E is the RMS electrical field strength.

8. System Description and Setup

The DASY system used for performing compliance tests consists of the following items:

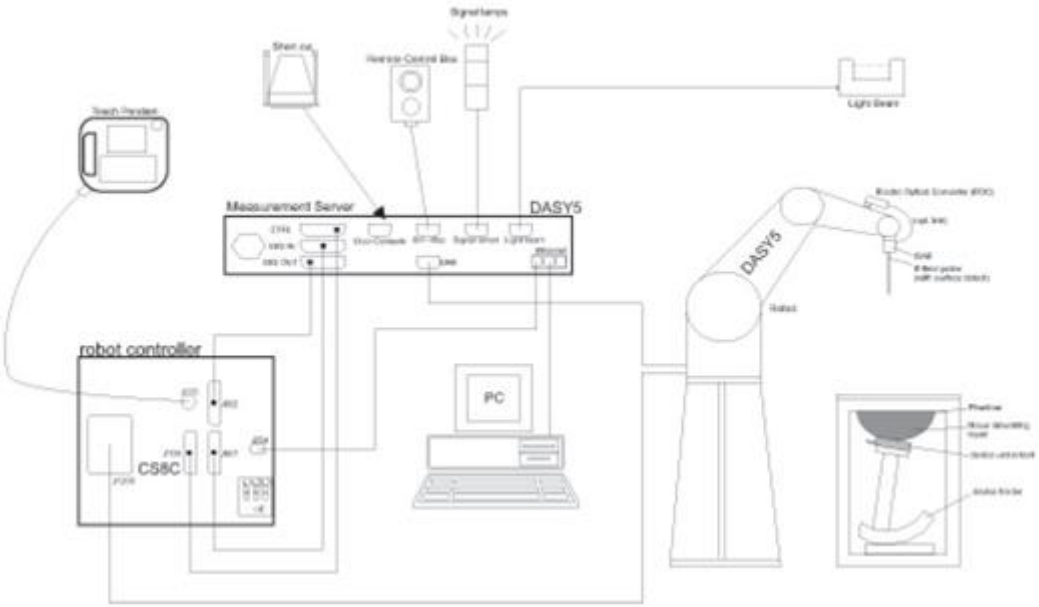

- A standard high precision 6-axis robot with controller, teach pendant and software. An arm extension for accommodating the data acquisition electronics (DAE).
- An isotropic Field probe optimized and calibrated for the targeted measurement.
- A data acquisition electronics (DAE) which performs the signal amplification, signal multiplexing, AD-conversion, offset measurements, mechanical surface detection, collision detection, etc. The unit is battery powered with standard or rechargeable batteries. The signal is optically transmitted to the EOC.
- The Electro-optical converter (EOC) performs the conversion from optical to electrical signals for the digital communication to the DAE. To use optical surface detection, a special version of the EOC is required. The EOC signal is transmitted to the measurement server.
- The function of the measurement server is to perform the time critical tasks such as signal filtering, control of the robot operation and fast movement interrupts.
- The Light Beam used is for probe alignment. This improves the (absolute) accuracy of the probe positioning.
- A computer running WinXP or Win7 and the DASY5 software.
- Remote control and teach pendant as well as additional circuitry for robot safety such as warning lamps, etc.
- The phantom, the device holder and other accessories according to the targeted measurement.

9. Measurement Procedures

The measurement procedures are as follows:

<Conducted power measurement>

(a) For WWAN power measurement, use base station simulator to configure EUT WWAN transmission in conducted connection with RF cable, at maximum power in each supported wireless interface and frequency band.
(b) Read the WWAN RF power level from the base station simulator.
(c) For WLAN/BT power measurement, use engineering software to configure EUT WLAN/BT continuously transmission, at maximum RF power in each supported wireless interface and frequency band
(d) Connect EUT RF port through RF cable to the power meter, and measure WLAN/BT output power

<SAR measurement>

(a) Use base station simulator to configure EUT WWAN transmission in radiated connection, and engineering software to configure EUT WLAN/BT continuously transmission, at maximum RF power, in the highest power channel.
(b) Place the EUT in the positions as Appendix D demonstrates.
(c) Set scan area, grid size and other setting on the DASY software.
(d) Measure SAR results for the highest power channel on each testing position.
(e) Find out the largest SAR result on these testing positions of each band
(f) Measure SAR results for other channels in worst SAR testing position if the reported SAR of highest power channel is larger than 0.8 W/kg

According to the test standard, the recommended procedure for assessing the peak spatial-average SAR value consists of the following steps:

(a) Power reference measurement
(b) Area scan
(c) Zoom scan
(d) Power drift measurement

9.1 Spatial Peak SAR Evaluation

The procedure for spatial peak SAR evaluation has been implemented according to the test standard. It can be conducted for 1g and 10g, as well as for user-specific masses. The DASY software includes all numerical procedures necessary to evaluate the spatial peak SAR value.

The base for the evaluation is a "cube" measurement. The measured volume must include the 1g and 10g cubes with the highest averaged SAR values. For that purpose, the center of the measured volume is aligned to the interpolated peak SAR value of a previously performed area scan.

The entire evaluation of the spatial peak values is performed within the post-processing engine (SEMCAD). The system always gives the maximum values for the 1g and 10g cubes. The algorithm to find the cube with highest averaged SAR is divided into the following stages:

(a) Extraction of the measured data (grid and values) from the Zoom Scan
(b) Calculation of the SAR value at every measurement point based on all stored data (A/D values and measurement parameters)
(c) Generation of a high-resolution mesh within the measured volume
(d) Interpolation of all measured values form the measurement grid to the high-resolution grid
(e) Extrapolation of the entire 3-D field distribution to the phantom surface over the distance from sensor to surface
(f) Calculation of the averaged SAR within masses of 1g and 10g

9.2 Power Reference Measurement

The Power Reference Measurement and Power Drift Measurements are for monitoring the power drift of the device under test in the batch process. The minimum distance of probe sensors to surface determines the closest measurement point to phantom surface. This distance cannot be smaller than the distance of sensor calibration points to probe tip as defined in the probe properties.

9.3 Area Scan

The area scan is used as a fast scan in two dimensions to find the area of high field values, before doing a fine measurement around the hot spot. The sophisticated interpolation routines implemented in DASY software can find the maximum found in the scanned area, within a range of the global maximum. The range (in dB0 is specified in the standards for compliance testing. For example, a 2 dB range is required in IEEE standard 1528 and IEC 62209 standards, whereby 3 dB is a requirement when compliance is assessed in accordance with the ARIB standard (Japan), if only one zoom scan follows the area scan, then only the absolute maximum will be taken as reference. For cases where multiple maximums are detected, the number of zoom scans has to be increased accordingly.

Area scan parameters extracted from FCC KDB 865664 D01v01r03 SAR measurement 100 MHz to 6 GHz.

	≤ 3 GHz	> 3 GHz
Maximum distance from closest measurement point (geometric center of probe sensors) to phantom surface	5 ± 1 mm	½·δ·ln(2) ± 0.5 mm
Maximum probe angle from probe axis to phantom surface normal at the measurement location	30° ± 1°	20° ± 1°
Maximum area scan spatial resolution: Δx_{Area}, Δy_{Area}	≤ 2 GHz: ≤ 15 mm 2 – 3 GHz: ≤ 12 mm	3 – 4 GHz: ≤ 12 mm 4 – 6 GHz: ≤ 10 mm
	When the x or y dimension of the test device, in the measurement plane orientation, is smaller than the above, the measurement resolution must be ≤ the corresponding x or y dimension of the test device with at least one measurement point on the test device.	

9.4 Zoom Scan

Zoom scans are used assess the peak spatial SAR values within a cubic averaging volume containing 1 gram and 10 gram of simulated tissue. The zoom scan measures points (refer to table below) within a cube shoes base faces are centered on the maxima found in a preceding area scan job within the same procedure. When the measurement is done, the zoom scan evaluates the averaged SAR for 1 gram and 10 gram and displays these values next to the job's label.

Zoom scan parameters extracted from FCC KDB 865664 D01v01r03 SAR measurement 100 MHz to 6 GHz.

			≤ 3 GHz	> 3 GHz
Maximum zoom scan spatial resolution: Δx_{Zoom}, Δy_{Zoom}			≤ 2 GHz: ≤ 8 mm 2 – 3 GHz: ≤ 5 mm*	3 – 4 GHz: ≤ 5 mm* 4 – 6 GHz: ≤ 4 mm*
Maximum zoom scan spatial resolution, normal to phantom surface	uniform grid: $\Delta z_{Zoom}(n)$		≤ 5 mm	3 – 4 GHz: ≤ 4 mm 4 – 5 GHz: ≤ 3 mm 5 – 6 GHz: ≤ 2 mm
	graded grid	$\Delta z_{Zoom}(1)$: between 1st two points closest to phantom surface	≤ 4 mm	3 – 4 GHz: ≤ 3 mm 4 – 5 GHz: ≤ 2.5 mm 5 – 6 GHz: ≤ 2 mm
		$\Delta z_{Zoom}(n>1)$: between subsequent points	$\leq 1.5 \cdot \Delta z_{Zoom}(n-1)$	
Minimum zoom scan volume	x, y, z		≥ 30 mm	3 – 4 GHz: ≥ 28 mm 4 – 5 GHz: ≥ 25 mm 5 – 6 GHz: ≥ 22 mm

Note: δ is the penetration depth of a plane-wave at normal incidence to the tissue medium; see draft standard IEEE P1528-2011 for details.

* When zoom scan is required and the *reported* SAR from the *area scan based 1-g SAR estimation* procedures of KDB 447498 is ≤ 1.4 W/kg, ≤ 8 mm, ≤ 7 mm and ≤ 5 mm zoom scan resolution may be applied, respectively, for 2 GHz to 3 GHz, 3 GHz to 4 GHz and 4 GHz to 6 GHz.

9.5 Volume Scan Procedures

The volume scan is used for assess overlapping SAR distributions for antennas transmitting in different frequency bands. It is equivalent to an oversized zoom scan used in standalone measurements. The measurement volume will be used to enclose all the simultaneous transmitting antennas. For antennas transmitting simultaneously in different frequency bands, the volume scan is measured separately in each frequency band. In order to sum correctly to compute the 1g aggregate SAR, the EUT remain in the same test position for all measurements and all volume scan use the same spatial resolution and grid spacing. When all volume scan were completed, the software, SEMCAD postprocessor can combine and subsequently superpose these measurement data to calculating the multiband SAR.

9.6 Power Drift Monitoring

All SAR testing is under the EUT install full charged battery and transmit maximum output power. In DASY measurement software, the power reference measurement and power drift measurement procedures are used for monitoring the power drift of EUT during SAR test. Both these procedures measure the field at a specified reference position before and after the SAR testing. The software will calculate the field difference in dB. If the power drifts more than 5%, the SAR will be retested.

10. Test Equipment List

Manufacturer	Name of Equipment	Type/Model	Serial Number	Calibration	
				Last Cal.	Due Date
SPEAG	835MHz System Validation Kit	D835V2	499	Mar. 24, 2014	Mar. 23, 2015
SPEAG	1750MHz System Validation Kit	D1750V2	1068	Nov. 27, 2013	Nov. 26, 2014
SPEAG	1900MHz System Validation Kit	D1900V2	5d041	Mar. 21, 2014	Mar. 20, 2015
SPEAG	Data Acquisition Electronics	DAE3	495	May. 08, 2013	May. 07, 2014
SPEAG	Dosimetric E-Field Probe	EX3DV4	3925	Jun. 12, 2013	Jun. 11, 2014
H.M.IRIS	Thermometer	TH-08	TM658	Oct. 22, 2013	Oct. 21, 2014
Agilent	Wireless Communication Test Set	E5515C	MY48360820	Jan. 10, 2014	Jan. 09, 2016
SPEAG	Device Holder	N/A	N/A	NCR	NCR
Agilent	Signal Generator	E4438C	MY49070755	Oct. 08, 2013	Oct. 07, 2014
SPEAG	Dielectric Probe Kit	DAK-3.5	1126	Jul. 23, 2013	Jul. 22, 2014
Agilent	ENA Network Analyzer	E5071C	MY46316648	Feb. 07, 2014	Feb. 06, 2015
Anritsu	Power Meter	ML2495A	1349001	Dec. 04, 2013	Dec. 03, 2014
Anritsu	Power Sensor	MA2411B	1306099	Dec. 03, 2013	Dec. 02, 2014
R&S	Spectrum Analyzer	FSP 7	101131	Jul. 09, 2013	Jul. 08, 2014
Agilent	Dual Directional Coupler	778D	50422	*CBT	
Woken	Attenuator	WK0602-XX	N/A	*CBT	
PE	Attenuator	PE7005-10	N/A	*CBT	
PE	Attenuator	PE7005- 3	N/A	*CBT	
AR	Power Amplifier	5S1G4M2	0328767	*CBT	
Mini-Circuits	Power Amplifier	ZVE-3W	162601250	*CBT	
Mini-Circuits	Power Amplifier	ZHL-42W+	13440021344	*CBT	

General Note:

1. The calibration certificate of DASY can be referred to appendix C of this report.
2. *CBT (Calibrated Before Testing). Prior to testing, the measurement paths containing an amplifier, coupler and attenuator were connected to a calibrated source (i.e. a signal generator) to determine the losses of the measurement path. The power meter offset was then adjusted to compensate for the measurement system losses. This level offset is stored within the power meter before measurements are made. The calibrated reading is then taken directly from the power meter after compensation of the losses for all final power measurement.

11. System Verification

11.1 Tissue Verification

The following tissue formulations are provided for reference only as some of the parameters have not been thoroughly verified. The composition of ingredients may be modified accordingly to achieve the desired target tissue parameters required for routine SAR evaluation.

Frequency (MHz)	Water (%)	Sugar (%)	Cellulose (%)	Salt (%)	Preventol (%)	DGBE (%)	Conductivity (σ)	Permittivity (εr)
For Head								
750	41.1	57.0	0.2	1.4	0.2	0	0.89	41.9
835	40.3	57.9	0.2	1.4	0.2	0	0.90	41.5
900	40.3	57.9	0.2	1.4	0.2	0	0.97	41.5
1800, 1900, 2000	55.2	0	0	0.3	0	44.5	1.40	40.0
2450	55.0	0	0	0	0	45.0	1.80	39.2
2600	54.8	0	0	0.1	0	45.1	1.96	39.0
For Body								
750	51.7	47.2	0	0.9	0.1	0	0.96	55.5
835	50.8	48.2	0	0.9	0.1	0	0.97	55.2
900	50.8	48.2	0	0.9	0.1	0	1.05	55.0
1800, 1900, 2000	70.2	0	0	0.4	0	29.4	1.52	53.3
2450	68.6	0	0	0	0	31.4	1.95	52.7
2600	68.1	0	0	0.1	0	31.8	2.16	52.5

Simulating Liquid for 5GHz, Manufactured by SPEAG

Ingredients	(% by weight)
Water	64~78%
Mineral oil	11~18%
Emulsifiers	9~15%
Additives and Salt	2~3%

<Tissue Dielectric Parameter Check Results>

Frequency (MHz)	Tissue Type	Liquid Temp. (℃)	Conductivity (σ)	Permittivity (ε_r)	Conductivity Target (σ)	Permittivity Target (ε_r)	Delta (σ) (%)	Delta (ε_r) (%)	Limit (%)	Date
850	Body	22.5	0.953	52.741	0.97	55.20	-1.75	-4.45	±5	2014/4/30
1750	Body	22.4	1.529	52.221	1.52	53.30	0.59	-2.02	±5	2014/5/1
1900	Body	22.4	1.510	51.935	1.52	53.30	-0.66	-2.56	±5	2014/5/1

11.2 System Performance Check Results

Comparing to the original SAR value provided by SPEAG, the verification data should be within its specification of 10 %. Below table shows the target SAR and measured SAR after normalized to 1W input power. The table below indicates the system performance check can meet the variation criterion and the plots can be referred to Appendix A of this report.

Date	Frequency (MHz)	Tissue Type	Input Power (mW)	Dipole S/N	Probe S/N	DAE S/N	Measured SAR (W/kg)	Targeted SAR (W/kg)	Normalized SAR (W/kg)	Deviation (%)
2014/4/30	850	Body	250	D835V2-499	3925	495	2.20	9.46	8.8	-6.98
2014/5/1	1750	Body	250	D1750V2-1068	3925	495	9.14	37.50	36.56	-2.51
2014/5/1	1900	Body	250	D1900V2-5d041	3925	495	10.20	41.00	40.8	-0.49

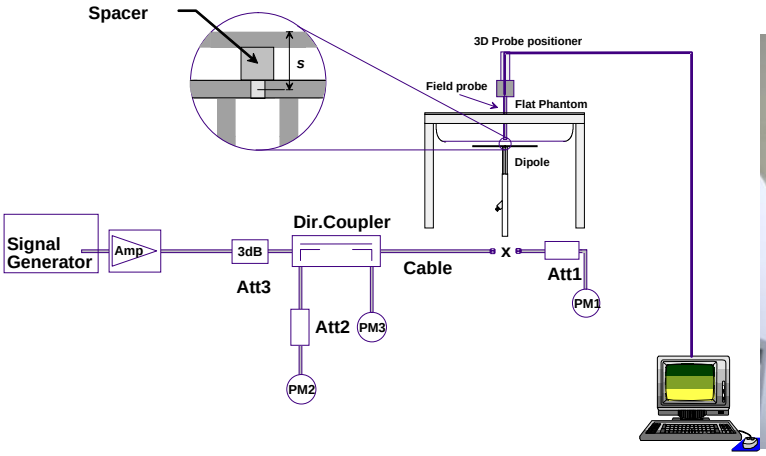

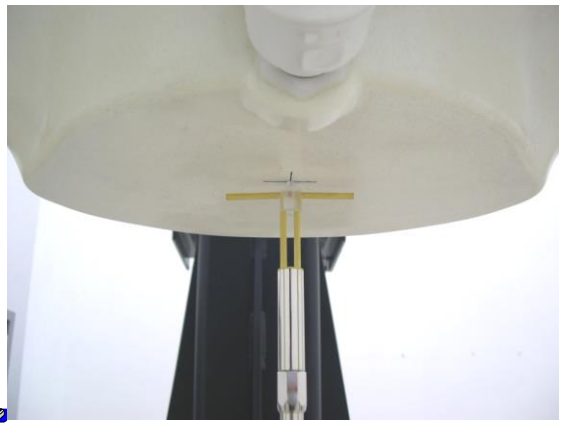

Fig 8.3.1 System Performance Check Setup

Fig 8.3.2 Setup Photo

12. RF Exposure Positions

12.1 SAR Testing for Tablet

This device can be used also in full sized tablet exposure conditions, due to its size. Per FCC KDB 616217, the back surface and edges of the tablet should be tested for SAR compliance with the tablet touching the phantom. The SAR exclusion threshold in KDB 447498 D01v05r02 can be applied to determine SAR test exclusion for adjacent edge configurations. The closest distance from the antenna to an adjacent tablet edge is used to determine if SAR testing is required for the adjacent edges, with the adjacent edge positioned against the phantom and the edge containing the antenna positioned perpendicular to the phantom.

13. Conducted RF Output Power (Unit: dBm)

<GSM Conducted Power>

General Note:

1. Per KDB 447498 D01v05r02, the maximum output power channel is used for SAR testing and for further SAR test reduction.
2. For Body SAR testing was following KDB 941225 D03v01, the GPRS 2Tx slots modes was selected when EUT operating without power back-off, the GPRS 2Tx slots modes was selected when EUT operating with power back-off, according to the highest source-based time-averaged output power.

Full Power mode (Proximity Sensor Inactive)

Band GSM850	Burst Average Power (dBm)			Tune-up Limit (dBm)	Frame-Average Power (dBm)			Tune-up Limit (dBm)
TX Channel	128	189	251		128	189	251	
Frequency (MHz)	824.2	836.4	848.8		824.2	836.4	848.8	
GPRS (GMSK, 1 Tx slot)	31.81	31.83	31.85	33.50	22.81	22.83	22.85	24.50
GPRS (GMSK, 2 Tx slots)	29.51	29.52	29.54	31.00	23.51	23.52	23.54	25.00
EDGE (8PSK, 1 Tx slot)	26.12	26.13	26.13	28.00	17.12	17.13	17.13	19.00
EDGE (8PSK, 2 Tx slots)	23.85	23.85	23.86	25.50	17.85	17.85	17.86	19.50
EDGE (8PSK, 3 Tx slots)	22.37	22.40	22.41	24.00	18.11	18.14	18.15	19.74
EDGE (8PSK, 4 Tx slots)	20.90	20.91	20.93	22.50	17.90	17.91	17.93	19.50

Band GSM1900	Burst Average Power (dBm)			Tune-up Limit (dBm)	Frame-Average Power (dBm)			Tune-up Limit (dBm)
TX Channel	512	661	810		512	661	810	
Frequency (MHz)	1850.2	1880	1909.8		1850.2	1880	1909.8	
GPRS (GMSK, 1 Tx slot)	29.09	28.88	28.66	30.50	20.09	19.88	19.66	21.50
GPRS (GMSK, 2 Tx slots)	26.60	26.38	26.17	28.00	20.60	20.38	20.17	22.00
EDGE (8PSK, 1 Tx slot)	24.90	24.80	24.59	27.00	15.90	15.80	15.59	18.00
EDGE (8PSK, 2 Tx slots)	22.58	22.50	22.29	24.50	16.58	16.50	16.29	18.50
EDGE (8PSK, 3 Tx slots)	21.05	21.00	21.10	23.00	16.79	16.74	16.84	18.74
EDGE (8PSK, 4 Tx slots)	19.55	19.49	19.25	21.50	16.55	16.49	16.25	18.50

Reduced Power Mode (Proximity Sensor active)

Band GSM850	Burst Average Power (dBm)			Tune-up Limit (dBm)	Frame-Average Power (dBm)			Tune-up Limit (dBm)
TX Channel	128	189	251		128	189	251	
Frequency (MHz)	824.2	836.4	848.8		824.2	836.4	848.8	
GPRS (GMSK, 1 Tx slot)	29.10	29.10	29.11	29.50	20.10	20.10	20.11	20.50
GPRS (GMSK, 2 Tx slots)	26.19	26.20	26.21	27.00	20.19	20.20	20.21	21.00
EDGE (8PSK, 1 Tx slot)	26.12	26.13	26.13	28.00	17.12	17.13	17.13	19.00
EDGE (8PSK, 2 Tx slots)	23.85	23.85	23.86	25.50	17.85	17.85	17.86	19.50
EDGE (8PSK, 3 Tx slots)	22.37	22.40	22.41	24.00	18.11	18.14	18.15	19.74
EDGE (8PSK, 4 Tx slots)	20.90	20.91	20.93	22.50	17.90	17.91	17.93	19.50

Band GSM1900	Burst Average Power (dBm)			Tune-up Limit (dBm)	Frame-Average Power (dBm)			Tune-up Limit (dBm)
TX Channel	512	661	810		512	661	810	
Frequency (MHz)	1850.2	1880	1909.8		1850.2	1880	1909.8	
GPRS (GMSK, 1 Tx slot)	27.12	27.00	26.82	27.50	18.12	18.00	17.82	18.50
GPRS (GMSK, 2 Tx slots)	24.16	24.03	23.88	25.00	18.16	18.03	17.88	19.00
EDGE (8PSK, 1 Tx slot)	24.90	24.80	24.59	27.00	15.90	15.80	15.59	18.00
EDGE (8PSK, 2 Tx slots)	22.58	22.50	22.29	24.50	16.58	16.50	16.29	18.50
EDGE (8PSK, 3 Tx slots)	21.05	21.00	21.10	23.00	16.79	16.74	16.84	18.74
EDGE (8PSK, 4 Tx slots)	19.55	19.56	19.51	21.50	16.55	16.56	16.51	18.50

<WCDMA Conducted Power>

The following tests were conducted according to the test requirements outlines in 3GPP TS 34.121 specification.

A summary of these settings are illustrated below:

HSDPA Setup Configuration:

a. The EUT was connected to Base Station Agilent E5515C referred to the Setup Configuration.
b. The RF path losses were compensated into the measurements.
c. A call was established between EUT and Base Station with following setting:
   i. Set Gain Factors (β_c and β_d) and parameters were set according to each
   ii. Specific sub-test in the following table, C10.1.4, quoted from the TS 34.121
   iii. Set RMC 12.2Kbps + HSDPA mode.
   iv. Set Cell Power = -86 dBm
   v. Set HS-DSCH Configuration Type to FRC (H-set 1, QPSK)
   vi. Select HSDPA Uplink Parameters
   vii. Set Delta ACK, Delta NACK and Delta CQI = 8
   viii. Set Ack-Nack Repetition Factor to 3
   ix. Set CQI Feedback Cycle (k) to 4 ms
   x. Set CQI Repetition Factor to 2
   xi. Power Ctrl Mode = All Up bits
d. The transmitted maximum output power was recorded.

Table C.10.1.4: β values for transmitter characteristics tests with HS-DPCCH

Sub-test	β_c	β_d	β_d (SF)	β_c/β_d	β_{HS} (Note1, Note 2)	CM (dB) (Note 3)	MPR (dB) (Note 3)
1	2/15	15/15	64	2/15	4/15	0.0	0.0
2	12/15 (Note 4)	15/15 (Note 4)	64	12/15 (Note 4)	24/15	1.0	0.0
3	15/15	8/15	64	15/8	30/15	1.5	0.5
4	15/15	4/15	64	15/4	30/15	1.5	0.5

Note 1: Δ_{ACK}, Δ_{NACK} and Δ_{CQI} = 30/15 with β_{hs} = 30/15 * β_c.

Note 2: For the HS-DPCCH power mask requirement test in clause 5.2C, 5.7A, and the Error Vector Magnitude (EVM) with HS-DPCCH test in clause 5.13.1A, and HSDPA EVM with phase discontinuity in clause 5.13.1AA, Δ_{ACK} and Δ_{NACK} = 30/15 with β_{hs} = 30/15 * β_c, and Δ_{CQI} = 24/15 with β_{hs} = 24/15 * β_c.

Note 3: CM = 1 for β_c/β_d =12/15, β_{hs}/β_c=24/15. For all other combinations of DPDCH, DPCCH and HS-DPCCH the MPR is based on the relative CM difference. This is applicable for only UEs that support HSDPA in release 6 and later releases.

Note 4: For subtest 2 the β_c/β_d ratio of 12/15 for the TFC during the measurement period (TF1, TF0) is achieved by setting the signalled gain factors for the reference TFC (TF1, TF1) to β_c = 11/15 and β_d = 15/15.

Setup Configuration

HSUPA Setup Configuration:

a. The EUT was connected to Base Station Agilent E5515C referred to the Setup Configuration.
b. The RF path losses were compensated into the measurements.
c. A call was established between EUT and Base Station with following setting * :
   i. Call Configs = 5.2B, 5.9B, 5.10B, and 5.13.2B with QPSK
   ii. Set the Gain Factors (β_c and β_d) and parameters (AG Index) were set according to each specific sub-test in the following table, C11.1.3, quoted from the TS 34.121
   iii. Set Cell Power = -86 dBm
   iv. Set Channel Type = 12.2k + HSPA
   v. Set UE Target Power
   vi. Power Ctrl Mode= Alternating bits
   vii. Set and observe the E-TFCI
   viii. Confirm that E-TFCI is equal to the target E-TFCI of 75 for sub-test 1, and other subtest's E-TFCI
d. The transmitted maximum output power was recorded.

Table C.11.1.3: β values for transmitter characteristics tests with HS-DPCCH and E-DCH

Sub-test	β_c	β_d	β_d (SF)	β_c/β_d	β_{HS} (Note1)	β_{ec}	β_{ed} (Note 5) (Note 6)	β_{ed} (SF)	β_{ed} (Codes)	CM (dB) (Note 2)	MPR (dB) (Note 2)	AG Index (Note 6)	E-TFCI
1	11/15 (Note 3)	15/15 (Note 3)	64	11/15 (Note 3)	22/15	209/225	1309/225	4	1	1.0	0.0	20	75
2	6/15	15/15	64	6/15	12/15	12/15	94/75	4	1	3.0	2.0	12	67
3	15/15	9/15	64	15/9	30/15	30/15	β_{ed}1: 47/15 β_{ed}2: 47/15	4 4	2	2.0	1.0	15	92
4	2/15	15/15	64	2/15	4/15	2/15	56/75	4	1	3.0	2.0	17	71
5	15/15 (Note 4)	15/15 (Note 4)	64	15/15 (Note 4)	30/15	24/15	134/15	4	1	1.0	0.0	21	81

Note 1: Δ_{ACK}, Δ_{NACK} and Δ_{CQI} = 30/15 with β_{hs} = 30/15 * β_c .

Note 2: CM = 1 for β_c/β_d =12/15, β_{hs}/β_c=24/15. For all other combinations of DPDCH, DPCCH, HS- DPCCH, E-DPDCH and E-DPCCH the MPR is based on the relative CM difference.

Note 3: For subtest 1 the β_c/β_d ratio of 11/15 for the TFC during the measurement period (TF1, TF0) is achieved by setting the signalled gain factors for the reference TFC (TF1, TF1) to β_c = 10/15 and β_d = 15/15.

Note 4: For subtest 5 the β_c/β_d ratio of 15/15 for the TFC during the measurement period (TF1, TF0) is achieved by setting the signalled gain factors for the reference TFC (TF1, TF1) to β_c = 14/15 and β_d = 15/15.

Note 5: In case of testing by UE using E-DPDCH Physical Layer category 1, Sub-test 3 is omitted according to TS25.306 Table 5.1g.

Note 6: β_{ed} can not be set directly, it is set by Absolute Grant Value.

Setup Configuration

<WCDMA Conducted Power>

General Note:

1. Per KDB 941225 D02v02r02, RMC 12.2kbps setting is used to evaluate SAR. If HSDPA/HSUPA output power is < 0.25dB higher than RMC, or reported SAR with RMC 12.2kbps setting is ≤ 1.2W/kg, HSDPA/HSUPA SAR evaluation can be excluded..

Full Power mode (Proximity Sensor Inactive)

Band			WCDMA V			WCDMA II			WCDMA IV		
TX Channel			4132	4182	4233	9262	9400	9538	1312	1413	1513
Frequency (MHz)			826.4	836.4	846.6	1852.4	1880	1907.6	1712.4	1732.6	1752.6
MPR(dB)	3GPP Rel 99	RMC 12.2Kbps	23.01	22.68	22.70	23.27	23.50	23.10	23.24	23.10	22.80
0	3GPP Rel 6	HSDPA Subtest-1	22.89	22.67	22.64	23.15	23.28	22.62	23.20	22.94	22.78
0	3GPP Rel 6	HSDPA Subtest-2	22.01	21.64	21.60	22.28	22.21	22.00	22.18	22.05	22.00
0.5	3GPP Rel 6	HSDPA Subtest-3	21.78	21.45	21.52	22.10	22.02	21.60	21.92	21.87	21.71
0.5	3GPP Rel 6	HSDPA Subtest-4	21.45	21.27	21.33	21.90	21.89	21.50	21.72	21.65	21.54
0	3GPP Rel 6	HSUPA Subtest-1	21.92	21.77	21.78	22.26	22.23	21.90	22.17	21.97	21.92
2	3GPP Rel 6	HSUPA Subtest-2	19.98	19.83	19.79	20.39	20.45	20.18	20.28	20.10	20.00
1	3GPP Rel 6	HSUPA Subtest-3	20.75	20.58	20.55	21.18	21.15	20.95	21.04	20.95	20.85
2	3GPP Rel 6	HSUPA Subtest-4	20.27	20.10	20.05	20.78	20.74	20.49	20.39	20.18	20.04
0	3GPP Rel 6	HSUPA Subtest-5	22.13	21.87	21.88	22.34	22.40	22.11	22.08	22.10	22.12

Reduced Power Mode (Proximity Sensor active)

Band			WCDMA V			WCDMA II			WCDMA IV		
TX Channel			4132	4182	4233	9262	9400	9538	1312	1413	1513
Frequency (MHz)			826.4	836.4	846.6	1852.4	1880	1907.6	1712.4	1732.6	1752.6
MPR(dB)	3GPP Rel 99	RMC 12.2Kbps	20.97	20.96	20.80	19.19	19.22	18.71	19.02	18.82	18.80
0	3GPP Rel 6	HSDPA Subtest-1	20.83	20.50	20.69	19.15	19.10	18.50	18.93	18.35	18.67
0	3GPP Rel 6	HSDPA Subtest-2	20.82	20.93	20.67	18.92	18.72	18.68	18.89	18.33	18.65
0.5	3GPP Rel 6	HSDPA Subtest-3	20.31	20.51	20.25	18.65	18.56	18.52	18.87	18.31	18.64
0.5	3GPP Rel 6	HSDPA Subtest-4	20.17	20.43	20.22	18.59	18.34	17.98	18.90	18.32	18.66
0	3GPP Rel 6	HSUPA Subtest-1	20.69	20.75	20.37	18.79	18.41	18.45	18.25	17.67	18.01
2	3GPP Rel 6	HSUPA Subtest-2	19.64	19.65	19.61	18.04	17.41	17.45	17.95	17.41	17.75
1	3GPP Rel 6	HSUPA Subtest-3	19.42	19.25	19.54	17.83	17.53	17.37	18.50	17.92	18.27
2	3GPP Rel 6	HSUPA Subtest-4	20.03	19.97	19.83	18.34	17.71	17.76	18.51	17.93	18.29
0	3GPP Rel 6	HSUPA Subtest-5	20.75	20.86	20.67	18.92	18.33	18.43	18.91	18.37	18.71

14. Antenna Location

<Tablet Mode>

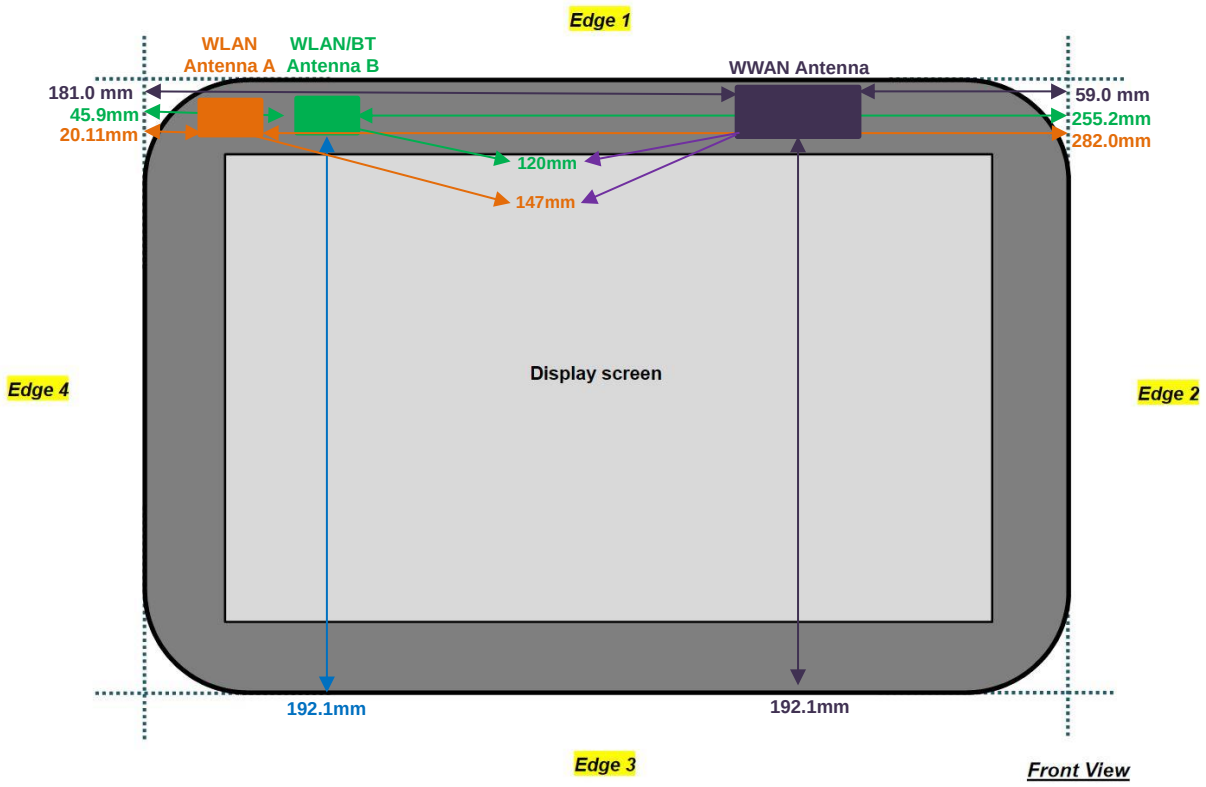

<Laptop Mode>

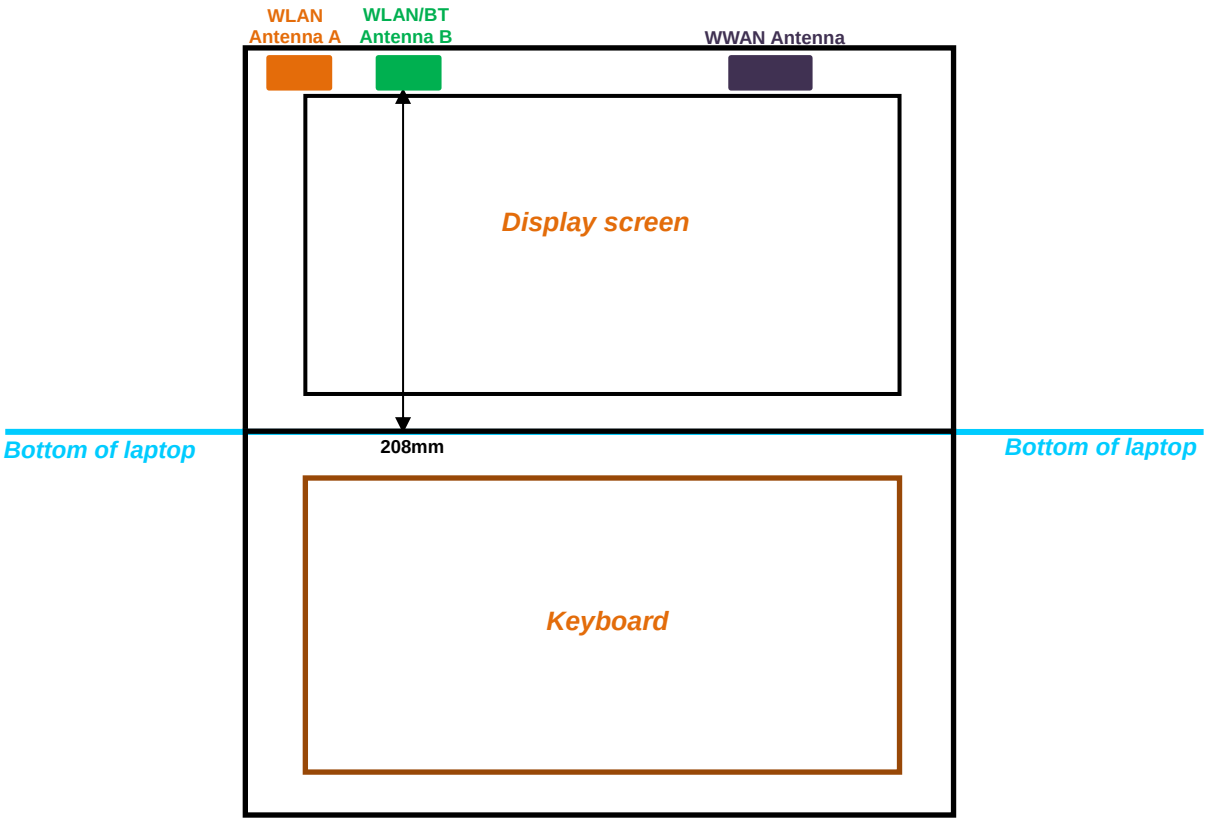
WLAN
Antenna A
WLAN/BT
Antenna B
WWAN Antenna
Display screen
Bottom of laptop
208mm
Bottom of laptop
Keyboard

<SAR test exclusion table>

General Note:

1. Below the table, when the distance is < 50 mm exclusion threshold is "Ratio", when the distance is > 50 mm exclusion threshold is "mW".
2. Maximum power is the source-based time-average power and represents the maximum RF output power among production units.
3. Per KDB 447498 D01v05r02, for larger devices, the test separation distance of adjacent edge configuration is determined by the closest separation between the antenna and the user.
4. Per KDB 447498 D01v05r02, standalone SAR test exclusion threshold is applied; If the test separation distance is < 5mm, 5mm is used to determine SAR exclusion threshold.
5. Per KDB 447498 D01v05r02, the 1-g and 10-g SAR test exclusion thresholds for 100 MHz to 6 GHz at *test separation distances* ≤ 50 mm are determined by:
   [(*max. power of channel, including tune-up tolerance, mW*)/(*min. test separation distance, mm*)] ·[√f(GHz)] ≤ 3.0 for 1-g SAR and ≤ 7.5 for 10-g extremity SAR
   - f(GHz) is the RF channel transmit frequency in GHz.
   - Power and distance are rounded to the nearest mW and mm before calculation.
   - The result is rounded to one decimal place for comparison.
6. Per KDB 447498 D01v05r02, at 100 MHz to 6 GHz and for *test separation distances* > 50 mm, the SAR test exclusion threshold is determined according to the following.
   a) [Threshold at 50 mm in step 1) + (test separation distance - 50 mm)·(f(MHz)/150)] mW, at 100 MHz to 1500 MHz.
   b) [Threshold at 50 mm in step 1) + (test separation distance - 50 mm)·10] mW at > 1500 MHz and ≤ 6 GHz.

Exposure Position	Wireless Interface	GPRS 850 Class 10	GPRS 1900 Class 10	WCDMA Band V	WCDMA Band IV	WCDMA Band II
	Calculated Frequency	848MHz	1909MHz	846MHz	1750MHz	1907MHz
	Maximum power (dBm)	25	22	24.5	24.5	24.5
	Maximum rated power(mW)	316	158	282	282	282
Bottom Face	Separation distance(mm)	5				
	exclusion threshold	58	44	52	75	78
	Testing required?	Yes	Yes	Yes	Yes	Yes
Edge 1	Separation distance(mm)	5				
	exclusion threshold	58	44	52	75	78
	Testing required?	Yes	Yes	Yes	Yes	Yes
Edge 2	Separation distance(mm)	59				
	exclusion threshold	214	199	214	203	199
	Testing required?	Yes	No	Yes	Yes	Yes
Edge 3	Separation distance(mm)	192.1				
	exclusion threshold	966	1530	965	1534	1530
	Testing required?	No	No	No	No	No
Edge 4	Separation distance(mm)	181				
	exclusion threshold	903	1419	902	1423	1419
	Testing required?	No	No	No	No	No
Bottom of Laptop	Separation distance(mm)	208				
	exclusion threshold	1056	1689	1054	1693	1689
	Testing required?	No	No	No	No	No

15. SAR Test Results

General Note:

1. Per KDB 447498 D01v05r02, the reported SAR is the measured SAR value adjusted for maximum tune-up tolerance.
   a. Tune-up scaling Factor = tune-up limit power (mW) / EUT RF power (mW), where tune-up limit is the maximum rated power among all production units.
   b. For WWAN: Reported SAR(W/kg)= Measured SAR(W/kg)*Tune-up Scaling Factor
2. Per KDB 447498 D01v05r02, for each exposure position, testing of other required channels within the operating mode of a frequency band is not required when the *reported* 1-g or 10-g SAR for the mid-band or highest output power channel is:
   - ≤ 0.8 W/kg or 2.0 W/kg, for 1-g or 10-g respectively, when the transmission band is ≤ 100 MHz
   - ≤ 0.6 W/kg or 1.5 W/kg, for 1-g or 10-g respectively, when the transmission band is between 100 MHz and 200 MHz
   - ≤ 0.4 W/kg or 1.0 W/kg, for 1-g or 10-g respectively, when the transmission band is ≥ 200 MHz
3. For the exposure positions that proximity sensor power reduction is applied for SAR compliance, additional SAR testing with EUT transmitting full power in normal mode was performed; 1.0cm for bottom face, 1.0cm for edge1, 1.0cm for curved surface of edge1.
4. When the minimum distance between antenna and device edge along the curve is less than bottom face and surface edge, the curved SAR is necessary, more detail information which can be referred to setup photo.
5. For SAR testing of the curved region of the device, the device was placed directly against the phantom at the point where the distance between the antenna and device exterior is a minimum.

15.1 Body SAR

<GSM SAR>

Plot No.	Band	Mode	Test Position	Gap (cm)	Ch.	Freq. (MHz)	Power Reduction	Average Power (dBm)	Tune-Up Limit (dBm)	Tune-up Scaling Factor	Power Drift (dB)	Measured 1g SAR (W/kg)	Reported 1g SAR (W/kg)
	GSM850	GPRS (2 Tx slots)	Bottom Face	0cm	251	848.8	ON	26.21	27.00	1.199	-0.04	0.721	0.865
	GSM850	GPRS (2 Tx slots)	Bottom Face	0cm	128	824.2	ON	26.19	27.00	1.205	0.01	0.719	0.866
	GSM850	GPRS (2 Tx slots)	Bottom Face	0cm	189	836.4	ON	26.20	27.00	1.202	-0.01	0.705	0.848
	GSM850	GPRS (2 Tx slots)	Edge 1	0cm	251	848.8	ON	26.21	27.00	1.199	-0.07	0.591	0.709
	GSM850	GPRS (2 Tx slots)	Curved surface of Edge1	0cm	251	848.8	ON	26.21	27.00	1.199	0.04	0.728	0.873
01	GSM850	GPRS (2 Tx slots)	Curved surface of Edge1	0cm	128	824.2	ON	26.19	27.00	1.205	0	0.803	**0.968**
	GSM850	GPRS (2 Tx slots)	Curved surface of Edge1	0cm	189	836.4	ON	26.20	27.00	1.202	0.01	0.776	0.933
	GSM850	GPRS (2 Tx slots)	Bottom Face	1cm	251	848.8	OFF	29.54	31.00	1.400	0.01	0.407	0.570
	GSM850	GPRS (2 Tx slots)	Edge 1	1cm	251	848.8	OFF	29.54	31.00	1.400	-0.12	0.413	0.578
	GSM850	GPRS (2 Tx slots)	Curved surface of Edge1	1cm	251	848.8	OFF	29.54	31.00	1.400	-0.03	0.671	0.939
	GSM850	GPRS (2 Tx slots)	Curved surface of Edge1	1cm	128	824.2	OFF	29.51	31.00	1.409	-0.03	0.662	0.933
	GSM850	GPRS (2 Tx slots)	Curved surface of Edge1	1cm	189	836.4	OFF	29.52	31.00	1.406	-0.09	0.654	0.920
	GSM850	GPRS (2 Tx slots)	Edge 2	0cm	251	848.8	OFF	29.54	31.00	1.400	0.05	0.036	0.050
	GSM1900	GPRS (2 Tx slots)	Bottom Face	0cm	512	1850.2	ON	24.16	25.00	1.213	0.13	0.550	0.667
	GSM1900	GPRS (2 Tx slots)	Edge 1	0cm	512	1850.2	ON	24.16	25.00	1.213	0.18	0.362	0.439
	GSM1900	GPRS (2 Tx slots)	Curved surface of Edge1	0cm	512	1850.2	ON	24.16	25.00	1.213	0.11	0.718	0.871
	GSM1900	GPRS (2 Tx slots)	Curved surface of Edge1	0cm	661	1880	ON	24.03	25.00	1.250	0.09	0.758	0.948
02	GSM1900	GPRS (2 Tx slots)	Curved surface of Edge1	0cm	810	1909.8	ON	23.88	25.00	1.294	0.06	0.819	**1.060**
	GSM1900	GPRS (2 Tx slots)	Bottom Face	1cm	512	1850.2	OFF	26.60	28.00	1.380	0.12	0.182	0.251
	GSM1900	GPRS (2 Tx slots)	Edge 1	1cm	512	1850.2	OFF	26.60	28.00	1.380	0.13	0.116	0.160
	GSM1900	GPRS (2 Tx slots)	Curved surface of Edge1	1cm	512	1850.2	OFF	26.60	28.00	1.380	-0.08	0.251	0.346

<WCDMA SAR>

Plot No.	Band	Mode	Test Position	Gap (cm)	Ch.	Freq. (MHz)	Power Reduction	Average Power (dBm)	Tune-Up Limit (dBm)	Tune-up Scaling Factor	Power Drift (dB)	Measured 1g SAR (W/kg)	Reported 1g SAR (W/kg)
	WCDMA V	RMC 12.2Kbps	Bottom Face	0cm	4132	826.4	ON	20.97	21.50	1.130	0	1.190	1.344
	WCDMA V	RMC 12.2Kbps	Bottom Face	0cm	4182	836.4	ON	20.96	21.50	1.132	-0.03	1.060	1.200
	WCDMA V	RMC 12.2Kbps	Bottom Face	0cm	4233	846.6	ON	20.80	21.50	1.175	-0.01	0.967	1.136
	WCDMA V	RMC 12.2Kbps	Edge 1	0cm	4132	826.4	ON	20.97	21.50	1.130	-0.1	0.764	0.863
	WCDMA V	RMC 12.2Kbps	Edge 1	0cm	4182	836.4	ON	20.96	21.50	1.132	-0.04	0.709	0.803
	WCDMA V	RMC 12.2Kbps	Edge 1	0cm	4233	846.6	ON	20.80	21.50	1.175	-0.04	0.694	0.815
	WCDMA V	RMC 12.2Kbps	Curved surface of Edge1	0cm	4132	826.4	ON	20.97	21.50	1.130	0.02	0.834	0.942
	WCDMA V	RMC 12.2Kbps	Curved surface of Edge1	0cm	4182	836.4	ON	20.96	21.50	1.132	0.1	0.866	0.981
	WCDMA V	RMC 12.2Kbps	Curved surface of Edge1	0cm	4233	846.6	ON	20.80	21.50	1.175	0	0.836	0.982
	WCDMA V	RMC 12.2Kbps	Bottom Face	1cm	4132	826.4	OFF	23.01	24.50	1.409	0.01	0.568	0.800
	WCDMA V	RMC 12.2Kbps	Bottom Face	1cm	4182	836.4	OFF	22.68	24.50	1.521	0.02	0.501	0.762
	WCDMA V	RMC 12.2Kbps	Bottom Face	1cm	4233	846.6	OFF	22.70	24.50	1.514	0	0.438	0.663
	WCDMA V	RMC 12.2Kbps	Edge 1	1cm	4132	826.4	OFF	23.01	24.50	1.409	0.15	0.612	0.862
	WCDMA V	RMC 12.2Kbps	Edge 1	1cm	4182	836.4	OFF	22.68	24.50	1.521	0.03	0.530	0.806
	WCDMA V	RMC 12.2Kbps	Edge 1	1cm	4233	846.6	OFF	22.70	24.50	1.514	0.02	0.468	0.708
	WCDMA V	RMC 12.2Kbps	Curved surface of Edge1	1cm	4132	826.4	OFF	23.01	24.50	1.409	-0.04	0.960	1.353
03	WCDMA V	RMC 12.2Kbps	Curved surface of Edge1	1cm	4182	836.4	OFF	22.68	24.50	1.521	-0.02	0.913	**1.388**
	WCDMA V	RMC 12.2Kbps	Curved surface of Edge1	1cm	4233	846.6	OFF	22.70	24.50	1.514	-0.04	0.799	1.209
	WCDMA V	RMC 12.2Kbps	Edge 2	0cm	4132	826.4	OFF	23.01	24.50	1.409	-0.01	0.051	0.072
	WCDMA IV	RMC 12.2Kpbs	Bottom Face	0cm	1312	1712.4	ON	19.02	19.50	1.117	-0.01	0.714	0.797
	WCDMA IV	RMC 12.2Kpbs	Edge 1	0cm	1312	1712.4	ON	19.02	19.50	1.117	0	0.404	0.451
	WCDMA IV	RMC 12.2Kpbs	Curved surface of Edge1	0cm	1312	1712.4	ON	19.02	19.50	1.117	0.06	0.770	0.860
	WCDMA IV	RMC 12.2Kpbs	Curved surface of Edge1	0cm	1413	1732.6	ON	18.82	19.50	1.169	-0.12	0.777	0.909
04	WCDMA IV	RMC 12.2Kpbs	Curved surface of Edge1	0cm	1513	1752.6	ON	18.80	19.50	1.175	0.09	0.787	**0.925**
	WCDMA IV	RMC 12.2Kpbs	Bottom Face	1cm	1312	1712.4	OFF	23.24	24.50	1.337	-0.01	0.420	0.561
	WCDMA IV	RMC 12.2Kpbs	Edge 1	1cm	1312	1712.4	OFF	23.24	24.50	1.337	0.03	0.343	0.458
	WCDMA IV	RMC 12.2Kpbs	Curved surface of Edge1	1cm	1312	1712.4	OFF	23.24	24.50	1.337	0	0.486	0.650
	WCDMA IV	RMC 12.2Kpbs	Edge 2	0cm	1312	1712.4	OFF	23.24	24.50	1.337	-0.03	0.046	0.061
	WCDMA II	RMC 12.2Kpbs	Bottom Face	0cm	9400	1880	ON	19.22	19.50	1.067	-0.04	0.703	0.750
	WCDMA II	RMC 12.2Kpbs	Edge 1	0cm	9400	1880	ON	19.22	19.50	1.067	-0.14	0.582	0.621
05	WCDMA II	RMC 12.2Kpbs	Curved surface of Edge1	0cm	9400	1880	ON	19.22	19.50	1.067	0.08	1.040	**1.109**
	WCDMA II	RMC 12.2Kpbs	Curved surface of Edge1	0cm	9262	1852.4	ON	19.19	19.50	1.074	-0.12	0.940	1.010
	WCDMA II	RMC 12.2Kpbs	Curved surface of Edge1	0cm	9538	1907.6	ON	18.71	19.50	1.199	-0.18	0.919	1.102
	WCDMA II	RMC 12.2Kpbs	Bottom Face	1cm	9400	1880	OFF	23.50	24.50	1.259	0	0.356	0.448
	WCDMA II	RMC 12.2Kpbs	Edge 1	1cm	9400	1880	OFF	23.50	24.50	1.259	-0.14	0.253	0.319
	WCDMA II	RMC 12.2Kpbs	Curved surface of Edge1	1cm	9400	1880	OFF	23.50	24.50	1.259	-0.19	0.517	0.651
	WCDMA II	RMC 12.2Kpbs	Edge 2	0cm	9400	1880	OFF	23.50	24.50	1.259	0.12	0.031	0.039

15.2 Repeated SAR Measurement

No.	Band	Mode	Test Position	Gap (cm)	Ch.	Freq. (MHz)	Power Reduction	Average Power (dBm)	Tune-Up Limit (dBm)	Tune-up Scaling Factor	Power Drift (dB)	Measured 1g SAR (W/kg)	Ratio	Reported 1g SAR (W/kg)
1st	WCDMA V	RMC 12.2Kbps	Bottom Face	0cm	4132	826.4	ON	20.97	21.50	1.130	0	1.190	-	1.344
2nd	WCDMA V	RMC 12.2Kbps	Bottom Face	0cm	4132	826.4	ON	20.97	21.50	1.130	0.01	1.050	1.13	1.186
1st	WCDMA II	RMC 12.2Kpbs	Curved surface of Edge1	0cm	9400	1880	ON	19.22	19.50	1.067	0.08	1.040	-	1.109
2nd	WCDMA II	RMC 12.2Kpbs	Curved surface of Edge1	0cm	9400	1880	ON	19.22	19.50	1.067	0.14	1.010	1.03	1.077

General Note:

1. Per KDB 865664 D01v01r03, for each frequency band, repeated SAR measurement is required only when the measured SAR is ≥0.8W/kg
2. Per KDB 865664 D01v01r03, if the ratio among the repeated measurement is ≤ 1.2 and the measured SAR <1.45W/kg, only one repeated measurement is required.
3. The ratio is the difference in percentage between original and repeated *measured SAR*.
4. All measurement SAR result is scaled-up to account for tune-up tolerance and is compliant.

16. Simultaneous Transmission Analysis

NO.	Simultaneous Transmission Configurations	Portable Tablet	Note
		Body	
1.	GPRS/EDGE(Data) + WLAN2.4GHz(data)	Yes	2.4GHz Hotspot
2.	WCDMA(Data) + WLAN2.4GHz(data)	Yes	2.4GHz Hotspot
3.	GPRS/EDGE(Data) + Bluetooth(data)	Yes	
4.	WCDMA(Data) + Bluetooth(data)	Yes	
5.	GPRS/EDGE(Data) + WLAN5GHz (data)	No	
6.	WCDMA(Data) + WLAN5GHz (data)	No	

General Note:

1. The below table of three kinds of WLAN module were also integrated into this host and the 2.4GHz WLAN and Bluetooth SAR testing results were also used perform transmission simultaneous analysis.
2. The worst case 2.4 GHz WLAN and Bluetooth SAR for each configuration in below each WLAN report was used for SAR summation; therefore, the following summations represent the absolute worst cases for simultaneous transmission with WLAN and Bluetooth.
3. For simultaneous transmission analysis for exposure position of edge1 1cm, Curved surface of Edge1 1cm and bottom face 1cm, WLAN SAR tested at 0mm separation is worse and the test data is used for conservative SAR summation.
4. The Scaled SAR summation is calculated based on the same configuration and test position.
5. Per KDB 447498 D01v05r02, simultaneous transmission SAR is compliant if,
   i) Scalar SAR summation < 1.6W/kg.
   ii) SPLSR = (SAR1 + SAR2)^1.5 / (min. separation distance, mm), and the peak separation distance is determined from the square root of [(x1-x2)2 + (y1-y2)2 + (z1-z2)2], where (x1, y1, z1) and (x2, y2, z2) are the coordinates of the extrapolated peak SAR locations in the zoom scan.
   iii) If SPLSR ≤ 0.04, simultaneously transmission SAR measurement is not necessary.
   iv) Simultaneously transmission SAR measurement, and the reported multi-band SAR < 1.6W/kg.
   v) The SPLSR calculated results please refer to section 16.2.

WLAN Module Information		
Integrated Module 1	Brand Name	Broadcom
	Model Name	BCM943142Y
	FCC ID	QDS-BRCM1079
	Report No	FA440180
	Mode	• 802.11 b/g/n • Bluetooth
Integrated Module 2	Brand Name	Intel
	Model Name	Intel® Dual Band Wireless-AC 3160 (Model 3160NGW)
	FCC ID	PD93160NG
	Report No	SAR.20140503
	Mode	• 802.11 a/b/g/n/ac • Bluetooth
Integrated Module 3	Brand Name	Intel
	Model Name	Intel® Dual Band Wireless-AC 7260 (Model 7260NGW, 7260NGW AN, 7260NGW BN, 7260NGW NB)
	FCC ID	PD97260NG
	Report No	SAR.20140502
	Mode	• 802.11 a/b/g/n/ac • Bluetooth

16.1 Body Exposure Conditions

16.1.1 Transmit simultaneous with Broadcom BCM943142Y

WWAN Band		Exposure Position	WWAN SAR (W/kg)	2.4GHz WLAN Antenna A SAR (W/kg)	Summed SAR (W/kg)	SPLSR	Case No
GSM	GSM850	Bottom Face at 1 cm	0.570	0.584	**1.15**		
		Edge1 at 1 cm	0.578	0.134	**0.71**		
		Curved surface of Edge1 at 1cm	0.939	0.277	**1.22**		
		Bottom Face at 0cm	0.866	0.584	**1.45**		
		Edge1 at 0cm	0.709	0.134	**0.84**		
		Edge2 at 0cm	0.050		**0.05**		
		Curved surface of Edge1 at 0cm	0.968	0.277	**1.25**		
	GSM1900	Bottom Face at 1 cm	0.251	0.584	**0.84**		
		Edge1 at 1 cm	0.160	0.134	**0.29**		
		Curved surface of Edge1 at 1cm	0.346	0.277	**0.62**		
		Bottom Face at 0cm	0.667	0.584	**1.25**		
		Edge1 at 0cm	0.439	0.134	**0.57**		
		Curved surface of Edge1 at 0cm	1.060	0.277	**1.34**		
WCMDA	Band V	Bottom Face at 1 cm	0.800	0.584	**1.38**		
		Edge1 at 1 cm	0.862	0.134	**1.00**		
		Curved surface of Edge1 at 1cm	1.388	0.277	**1.67**	0.01	Case 1
		Bottom Face at 0cm	1.344	0.584	**1.93**	0.01	Case 2
		Edge1 at 0cm	0.863	0.134	**1.00**		
		Edge2 at 0cm	0.072		**0.07**		
		Curved surface of Edge1 at 0cm	0.982	0.277	**1.26**		
	Band IV	Bottom Face at 1 cm	0.561	0.584	**1.15**		
		Edge1 at 1 cm	0.458	0.134	**0.59**		
		Curved surface of Edge1 at 1cm	0.650	0.277	**0.93**		
		Bottom Face at 0cm	0.797	0.584	**1.38**		
		Edge1 at 0cm	0.451	0.134	**0.59**		
		Edge2 at 0cm	0.061		**0.06**		
		Curved surface of Edge1 at 0cm	0.925	0.277	**1.20**		
	Band II	Bottom Face at 1 cm	0.448	0.584	**1.03**		
		Edge1 at 1 cm	0.319	0.134	**0.45**		
		Curved surface of Edge1 at 1cm	0.651	0.277	**0.93**		
		Bottom Face at 0cm	0.750	0.584	**1.33**		
		Edge1 at 0cm	0.621	0.134	**0.76**		
		Edge2 at 0cm	0.039		**0.04**		
		Curved surface of Edge1 at 0cm	1.109	0.277	**1.39**		

WWAN Band		Exposure Position	WWAN SAR (W/kg)	2.4GHz WLAN Antenna B SAR (W/kg)	Summed SAR (W/kg)	SPLSR	Case No
GSM	GSM850	Bottom Face at 1 cm	0.570	0.318	**0.89**		
		Edge1 at 1 cm	0.578	0.173	**0.75**		
		Curved surface of Edge1 at 1cm	0.939	0.151	**1.09**		
		Bottom Face at 0cm	0.866	0.318	**1.18**		
		Edge1 at 0cm	0.709	0.173	**0.88**		
		Edge2 at 0cm	0.050		**0.05**		
		Curved surface of Edge1 at 0cm	0.968	0.151	**1.12**		
	GSM1900	Bottom Face at 1 cm	0.251	0.318	**0.57**		
		Edge1 at 1 cm	0.160	0.173	**0.33**		
		Curved surface of Edge1 at 1cm	0.346	0.151	**0.50**		
		Bottom Face at 0cm	0.667	0.318	**0.99**		
		Edge1 at 0cm	0.439	0.173	**0.61**		
		Curved surface of Edge1 at 0cm	1.060	0.151	**1.21**		
WCMDA	Band V	Bottom Face at 1 cm	0.800	0.318	**1.12**		
		Edge1 at 1 cm	0.862	0.173	**1.04**		
		Curved surface of Edge1 at 1cm	1.388	0.151	**1.54**		
		Bottom Face at 0cm	1.344	0.318	**1.66**	0.01	Case 3
		Edge1 at 0cm	0.863	0.173	**1.04**		
		Edge2 at 0cm	0.072		**0.07**		
		Curved surface of Edge1 at 0cm	0.982	0.151	**1.13**		
	Band IV	Bottom Face at 1 cm	0.561	0.318	**0.88**		
		Edge1 at 1 cm	0.458	0.173	**0.63**		
		Curved surface of Edge1 at 1cm	0.650	0.151	**0.80**		
		Bottom Face at 0cm	0.797	0.318	**1.12**		
		Edge1 at 0cm	0.451	0.173	**0.62**		
		Edge2 at 0cm	0.061		**0.06**		
		Curved surface of Edge1 at 0cm	0.925	0.151	**1.08**		
	Band II	Bottom Face at 1 cm	0.448	0.318	**0.77**		
		Edge1 at 1 cm	0.319	0.173	**0.49**		
		Curved surface of Edge1 at 1cm	0.651	0.151	**0.80**		
		Bottom Face at 0cm	0.750	0.318	**1.07**		
		Edge1 at 0cm	0.621	0.173	**0.79**		
		Edge2 at 0cm	0.039		**0.04**		
		Curved surface of Edge1 at 0cm	1.109	0.151	**1.26**		

WWAN Band		Exposure Position	WWAN SAR (W/kg)	2.4GHz Bluetooth SAR (W/kg)	Summed SAR (W/kg)	SPLSR	Case No
GSM	GSM850	Bottom Face at 1 cm	0.570	0.014	**0.58**		
		Edge1 at 1 cm	0.578	0.014	**0.59**		
		Curved surface of Edge1 at 1cm	0.939	0.014	**0.95**		
		Bottom Face at 0cm	0.866	0.014	**0.88**		
		Edge1 at 0cm	0.709	0.014	**0.72**		
		Edge2 at 0cm	0.050	0.014	**0.06**		
		Curved surface of Edge1 at 0cm	0.968	0.014	**0.98**		
	GSM1900	Bottom Face at 1 cm	0.251	0.014	**0.27**		
		Edge1 at 1 cm	0.160	0.014	**0.17**		
		Curved surface of Edge1 at 1cm	0.346	0.014	**0.36**		
		Bottom Face at 0cm	0.667	0.014	**0.68**		
		Edge1 at 0cm	0.439	0.014	**0.45**		
		Curved surface of Edge1 at 0cm	1.060	0.014	**1.07**		
WCMDA	Band V	Bottom Face at 1 cm	0.800	0.014	**0.81**		
		Edge1 at 1 cm	0.862	0.014	**0.88**		
		Curved surface of Edge1 at 1cm	1.388	0.014	**1.40**		
		Bottom Face at 0cm	1.344	0.014	**1.36**		
		Edge1 at 0cm	0.863	0.014	**0.88**		
		Edge2 at 0cm	0.072	0.014	**0.09**		
		Curved surface of Edge1 at 0cm	0.982	0.014	**1.00**		
	Band IV	Bottom Face at 1 cm	0.561	0.014	**0.58**		
		Edge1 at 1 cm	0.458	0.014	**0.47**		
		Curved surface of Edge1 at 1cm	0.650	0.014	**0.66**		
		Bottom Face at 0cm	0.797	0.014	**0.81**		
		Edge1 at 0cm	0.451	0.014	**0.47**		
		Edge2 at 0cm	0.061	0.014	**0.08**		
		Curved surface of Edge1 at 0cm	0.925	0.014	**0.94**		
	Band II	Bottom Face at 1 cm	0.448	0.014	**0.46**		
		Edge1 at 1 cm	0.319	0.014	**0.33**		
		Curved surface of Edge1 at 1cm	0.651	0.014	**0.67**		
		Bottom Face at 0cm	0.750	0.014	**0.76**		
		Edge1 at 0cm	0.621	0.014	**0.64**		
		Edge2 at 0cm	0.039	0.014	**0.05**		
		Curved surface of Edge1 at 0cm	1.109	0.014	**1.12**		

16.1.2 Transmit simultaneous with Intel 3160NGW

WWAN Band		Exposure Position	WWAN SAR (W/kg)	2.4GHz WLAN Antenna B SAR (W/kg)	Summed SAR (W/kg)	SPLSR	Case No
GSM	GSM850	Bottom Face at 1 cm	0.570	0.370	**0.94**		
		Edge1 at 1 cm	0.578	0.120	**0.70**		
		Curved surface of Edge1 at 1cm	0.939	0.620	**1.56**		
		Bottom Face at 0cm	0.866	0.370	**1.24**		
		Edge1 at 0cm	0.709	0.270	**0.98**		
		Edge2 at 0cm	0.050		**0.05**		
		Curved surface of Edge1 at 0cm	0.968	0.620	**1.59**		
	GSM1900	Bottom Face at 1 cm	0.251	0.370	**0.62**		
		Edge1 at 1 cm	0.160	0.120	**0.28**		
		Curved surface of Edge1 at 1cm	0.346	0.620	**0.97**		
		Bottom Face at 0cm	0.667	0.370	**1.04**		
		Edge1 at 0cm	0.439	0.270	**0.71**		
		Edge2 at 0cm	0.015		**0.02**		
		Curved surface of Edge1 at 0cm	1.060	0.620	**1.68**	0.02	Case 4
WCMDA	Band V	Bottom Face at 1 cm	0.800	0.370	**1.17**		
		Edge1 at 1 cm	0.862	0.120	**0.98**		
		Curved surface of Edge1 at 1cm	1.388	0.620	**2.01**	0.02	Case 5
		Bottom Face at 0cm	1.344	0.370	**1.71**	0.02	Case 6
		Edge1 at 0cm	0.863	0.270	**1.13**		
		Edge2 at 0cm	0.072		**0.07**		
		Curved surface of Edge1 at 0cm	0.982	0.620	**1.60**	0.02	Case 7
	Band IV	Bottom Face at 1 cm	0.561	0.370	**0.93**		
		Edge1 at 1 cm	0.458	0.120	**0.58**		
		Curved surface of Edge1 at 1cm	0.650	0.620	**1.27**		
		Bottom Face at 0cm	0.797	0.370	**1.17**		
		Edge1 at 0cm	0.451	0.270	**0.72**		
		Edge2 at 0cm	0.061		**0.06**		
		Curved surface of Edge1 at 0cm	0.925	0.620	**1.55**		
	Band II	Bottom Face at 1 cm	0.448	0.370	**0.82**		
		Edge1 at 1 cm	0.319	0.120	**0.44**		
		Curved surface of Edge1 at 1cm	0.651	0.620	**1.27**		
		Bottom Face at 0cm	0.750	0.370	**1.12**		
		Edge1 at 0cm	0.621	0.270	**0.89**		
		Edge2 at 0cm	0.039		**0.04**		
		Curved surface of Edge1 at 0cm	1.109	0.620	**1.73**	0.02	Case 8

WWAN Band		Exposure Position	WWAN SAR (W/kg)	2.4GHz Bluetooth SAR (W/kg)	Summed SAR (W/kg)	SPLSR	Case No
GSM	GSM850	Bottom Face at 1 cm	0.570	0.010	**0.57**		
		Edge1 at 1 cm	0.578	0.010	**0.58**		
		Curved surface of Edge1 at 1cm	0.939	0.010	**0.94**		
		Bottom Face at 0cm	0.866	0.010	**0.87**		
		Edge1 at 0cm	0.709	0.010	**0.71**		
		Edge2 at 0cm	0.050		**0.05**		
		Curved surface of Edge1 at 0cm	0.968	0.010	**0.97**		
	GSM1900	Bottom Face at 1 cm	0.251	0.010	**0.25**		
		Edge1 at 1 cm	0.160	0.010	**0.16**		
		Curved surface of Edge1 at 1cm	0.346	0.010	**0.35**		
		Bottom Face at 0cm	0.667	0.010	**0.67**		
		Edge1 at 0cm	0.439	0.010	**0.44**		
		Edge2 at 0cm	0.015		**0.02**		
		Curved surface of Edge1 at 0cm	1.060	0.010	**1.06**		
WCMDA	Band V	Bottom Face at 1 cm	0.800	0.010	**0.80**		
		Edge1 at 1 cm	0.862	0.010	**0.86**		
		Curved surface of Edge1 at 1cm	1.388	0.010	**1.39**		
		Bottom Face at 0cm	1.344	0.010	**1.34**		
		Edge1 at 0cm	0.863	0.010	**0.86**		
		Edge2 at 0cm	0.072		**0.07**		
		Curved surface of Edge1 at 0cm	0.982	0.010	**0.98**		
	Band IV	Bottom Face at 1 cm	0.561	0.010	**0.56**		
		Edge1 at 1 cm	0.458	0.010	**0.46**		
		Curved surface of Edge1 at 1cm	0.650	0.010	**0.65**		
		Bottom Face at 0cm	0.797	0.010	**0.80**		
		Edge1 at 0cm	0.451	0.010	**0.45**		
		Edge2 at 0cm	0.061		**0.06**		
		Curved surface of Edge1 at 0cm	0.925	0.010	**0.93**		
	Band II	Bottom Face at 1 cm	0.448	0.010	**0.45**		
		Edge1 at 1 cm	0.319	0.010	**0.32**		
		Curved surface of Edge1 at 1cm	0.651	0.010	**0.65**		
		Bottom Face at 0cm	0.750	0.010	**0.75**		
		Edge1 at 0cm	0.621	0.010	**0.62**		
		Edge2 at 0cm	0.039		**0.04**		
		Curved surface of Edge1 at 0cm	1.109	0.010	**1.11**		

16.1.3 Transmit simultaneous with Intel 7260NGW, 7260NGW AN, 7260NGW BN, 7260NGW NB

WWAN Band		Exposure Position	WWAN SAR (W/kg)	2.4GHz WLAN Antenna B SAR (W/kg)	Summed SAR (W/kg)	SPLSR	Case No
GSM	GSM850	Bottom Face at 1 cm	0.570	0.360	**0.93**		
		Edge1 at 1 cm	0.578	0.120	**0.70**		
		Curved surface of Edge1 at 1cm	0.939	0.610	**1.55**		
		Bottom Face at 0cm	0.866	0.360	**1.23**		
		Edge1 at 0cm	0.709	0.120	**0.83**		
		Edge2 at 0cm	0.050		**0.05**		
		Curved surface of Edge1 at 0cm	0.968	0.610	**1.58**		
	GSM1900	Bottom Face at 1 cm	0.251	0.360	**0.61**		
		Edge1 at 1 cm	0.160	0.120	**0.28**		
		Curved surface of Edge1 at 1cm	0.346	0.610	**0.96**		
		Bottom Face at 0cm	0.667	0.360	**1.03**		
		Edge1 at 0cm	0.439	0.120	**0.56**		
		Edge2 at 0cm	0.015		**0.02**		
		Curved surface of Edge1 at 0cm	1.060	0.610	**1.67**	0.02	Case 9
WCMDA	Band V	Bottom Face at 1 cm	0.800	0.360	**1.16**		
		Edge1 at 1 cm	0.862	0.120	**0.98**		
		Curved surface of Edge1 at 1cm	1.388	0.610	**2.00**	0.02	Case 10
		Bottom Face at 0cm	1.344	0.360	**1.70**	0.01	Case 11
		Edge1 at 0cm	0.863	0.120	**0.98**		
		Edge2 at 0cm	0.072		**0.07**		
		Curved surface of Edge1 at 0cm	0.982	0.610	**1.59**		
	Band IV	Bottom Face at 1 cm	0.561	0.360	**0.92**		
		Edge1 at 1 cm	0.458	0.120	**0.58**		
		Curved surface of Edge1 at 1cm	0.650	0.610	**1.26**		
		Bottom Face at 0cm	0.797	0.360	**1.16**		
		Edge1 at 0cm	0.451	0.120	**0.57**		
		Edge2 at 0cm	0.061		**0.06**		
		Curved surface of Edge1 at 0cm	0.925	0.610	**1.54**		
	Band II	Bottom Face at 1 cm	0.448	0.360	**0.81**		
		Edge1 at 1 cm	0.319	0.120	**0.44**		
		Curved surface of Edge1 at 1cm	0.651	0.610	**1.26**		
		Bottom Face at 0cm	0.750	0.360	**1.11**		
		Edge1 at 0cm	0.621	0.120	**0.74**		
		Edge2 at 0cm	0.039		**0.04**		
		Curved surface of Edge1 at 0cm	1.109	0.610	**1.72**	0.02	Case 12

WWAN Band		Exposure Position	WWAN SAR (W/kg)	2.4GHz WLAN Antenna A SAR (W/kg)	1+3 Summed SAR (W/kg)	SPLSR	Case No
GSM	GSM850	Bottom Face at 1 cm	0.570	0.240	**0.81**		
		Edge1 at 1 cm	0.578	0.110	**0.69**		
		Curved surface of Edge1 at 1cm	0.939	0.230	**1.17**		
		Bottom Face at 0cm	0.866	0.240	**1.11**		
		Edge1 at 0cm	0.709	0.110	**0.82**		
		Edge2 at 0cm	0.050		**0.05**		
		Curved surface of Edge1 at 0cm	0.968	0.230	**1.20**		
	GSM1900	Bottom Face at 1 cm	0.251	0.240	**0.49**		
		Edge1 at 1 cm	0.160	0.110	**0.27**		
		Curved surface of Edge1 at 1cm	0.346	0.230	**0.58**		
		Bottom Face at 0cm	0.667	0.240	**0.91**		
		Edge1 at 0cm	0.439	0.110	**0.55**		
		Edge2 at 0cm	0.015		**0.02**		
		Curved surface of Edge1 at 0cm	1.060	0.230	**1.29**		
WCMDA	Band V	Bottom Face at 1 cm	0.800	0.240	**1.04**		
		Edge1 at 1 cm	0.862	0.110	**0.97**		
		Curved surface of Edge1 at 1cm	1.388	0.230	**1.62**	0.01	Case13
		Bottom Face at 0cm	1.344	0.240	**1.58**		
		Edge1 at 0cm	0.863	0.110	**0.97**		
		Edge2 at 0cm	0.072		**0.07**		
		Curved surface of Edge1 at 0cm	0.982	0.230	**1.21**		
	Band IV	Bottom Face at 1 cm	0.561	0.240	**0.80**		
		Edge1 at 1 cm	0.458	0.110	**0.57**		
		Curved surface of Edge1 at 1cm	0.650	0.230	**0.88**		
		Bottom Face at 0cm	0.797	0.240	**1.04**		
		Edge1 at 0cm	0.451	0.110	**0.56**		
		Edge2 at 0cm	0.061		**0.06**		
		Curved surface of Edge1 at 0cm	0.925	0.230	**1.16**		
	Band II	Bottom Face at 1 cm	0.448	0.240	**0.69**		
		Edge1 at 1 cm	0.319	0.110	**0.43**		
		Curved surface of Edge1 at 1cm	0.651	0.230	**0.88**		
		Bottom Face at 0cm	0.750	0.240	**0.99**		
		Edge1 at 0cm	0.621	0.110	**0.73**		
		Edge2 at 0cm	0.039		**0.04**		
		Curved surface of Edge1 at 0cm	1.109	0.230	**1.34**		

WWAN Band		Exposure Position	WWAN SAR (W/kg)	2.4GHz Bluetooth Estimated SAR (W/kg)	Summed SAR (W/kg)	SPLSR	Case No
GSM	GSM850	Bottom Face at 1 cm	0.570	0.040	**0.61**		
		Edge1 at 1 cm	0.578	0.010	**0.59**		
		Curved surface of Edge1 at 1cm	0.939	0.050	**0.99**		
		Bottom Face at 0cm	0.866	0.040	**0.91**		
		Edge1 at 0cm	0.709	0.010	**0.72**		
		Edge2 at 0cm	0.050		**0.05**		
		Curved surface of Edge1 at 0cm	0.968	0.050	**1.02**		
	GSM1900	Bottom Face at 1 cm	0.251	0.040	**0.29**		
		Edge1 at 1 cm	0.160	0.010	**0.17**		
		Curved surface of Edge1 at 1cm	0.346	0.050	**0.40**		
		Bottom Face at 0cm	0.667	0.040	**0.71**		
		Edge1 at 0cm	0.439	0.010	**0.45**		
		Edge2 at 0cm	0.015		**0.02**		
		Curved surface of Edge1 at 0cm	1.060	0.050	**1.11**		
WCMDA	Band V	Bottom Face at 1 cm	0.800	0.040	**0.84**		
		Edge1 at 1 cm	0.862	0.010	**0.87**		
		Curved surface of Edge1 at 1cm	1.388	0.050	**1.44**		
		Bottom Face at 0cm	1.344	0.040	**1.38**		
		Edge1 at 0cm	0.863	0.010	**0.87**		
		Edge2 at 0cm	0.072		**0.07**		
		Curved surface of Edge1 at 0cm	0.982	0.050	**1.03**		
	Band IV	Bottom Face at 1 cm	0.561	0.040	**0.60**		
		Edge1 at 1 cm	0.458	0.010	**0.47**		
		Curved surface of Edge1 at 1cm	0.650	0.050	**0.70**		
		Bottom Face at 0cm	0.797	0.040	**0.84**		
		Edge1 at 0cm	0.451	0.010	**0.46**		
		Edge2 at 0cm	0.061		**0.06**		
		Curved surface of Edge1 at 0cm	0.925	0.050	**0.98**		
	Band II	Bottom Face at 1 cm	0.448	0.040	**0.49**		
		Edge1 at 1 cm	0.319	0.010	**0.33**		
		Curved surface of Edge1 at 1cm	0.651	0.050	**0.70**		
		Bottom Face at 0cm	0.750	0.040	**0.79**		
		Edge1 at 0cm	0.621	0.010	**0.63**		
		Edge2 at 0cm	0.039		**0.04**		
		Curved surface of Edge1 at 0cm	1.109	0.050	**1.16**		

16.2 SPLSR Evaluation and Analysis

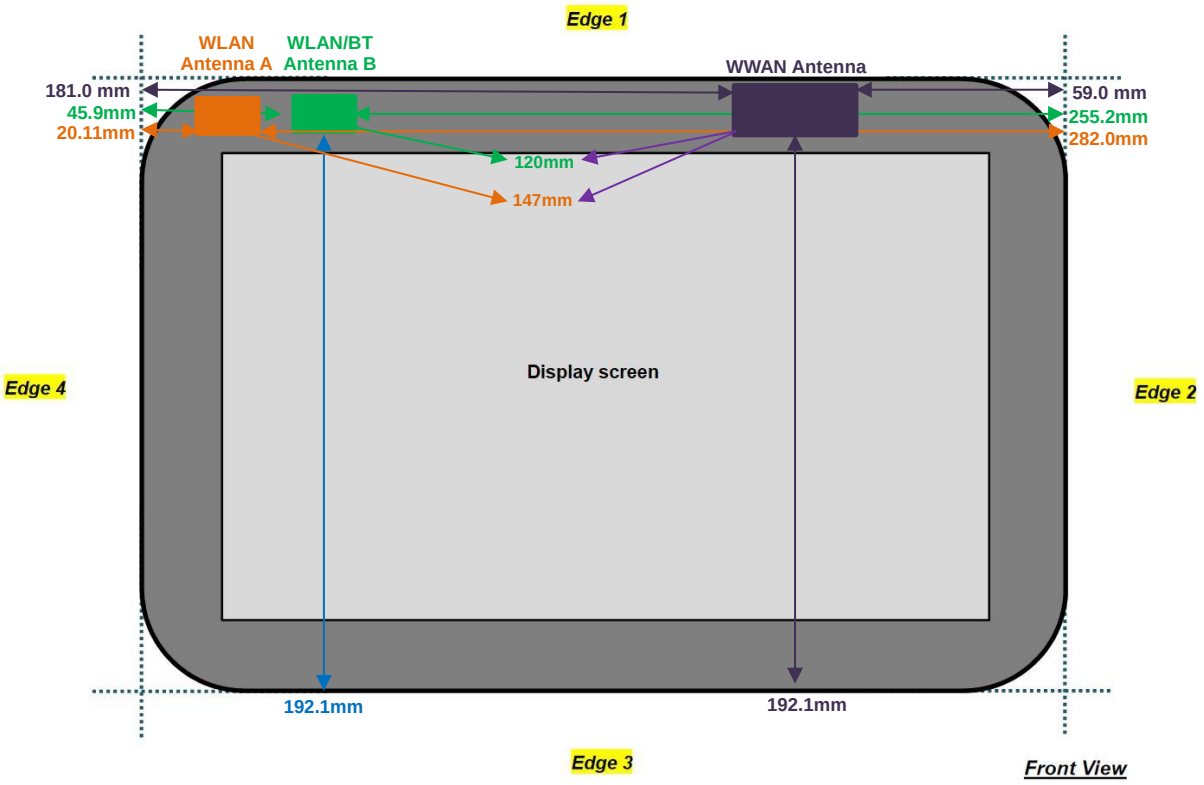

General Note:

1. Either WLAN/Bluetooth module of FCC ID: PD97260NG or WLAN/Bluetooth module of FCC ID: PD93160NG would be integrated into this host, and the identical WLAN antenna is used for either one module integration
2. For SPLSR analysis of colocation with PD97260NG and PD93160NG, the minimum distances between each antenna pair was used for conservative SPLSR calculation. This is justified to compare the SAR peak separation in SPLSR analysis case 1 ~ case3 with SPLSR analysis case4 ~ case12.
3. SPLSR = $(SAR_1 + SAR_2)^{1.5}$ / (*min. separation distance, mm*). If SPLSR ≤ 0.04, simultaneously transmission SAR measurement is not necessary

Case 1	Band	Position	SAR (W/kg)	Gap (cm)	SAR peak location (m) X	Y	Z	3D distance (mm)	Summed SAR (W/kg)	SPLSR Results	Simultaneous SAR
	WLAN Antenna A	Curved surface of Edge1	0.277	0cm	0.0612	-0.14	-0.177	212.4	1.67	0.01	Not required
	WCDMA V		1.388	1cm	0.0735	0.072	-0.181				

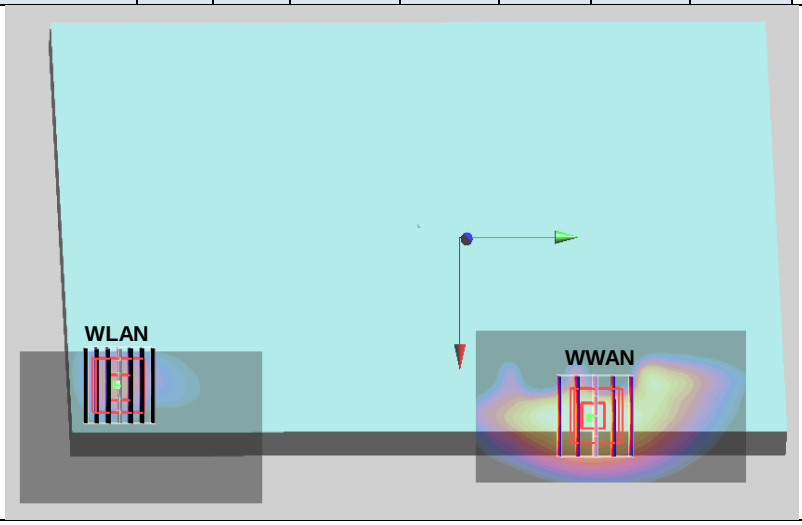

Case 2	Band	Position	SAR (W/kg)	Gap (cm)	SAR peak location (m) X	Y	Z	3D distance (mm)	Summed SAR (W/kg)	SPLSR Results	Simultaneous SAR
	WLAN Antenna A	Bottom Face	0.584	0cm	0.0644	-0.134	-0.176	206.3	1.93	0.01	Not required
	WCDMA V		1.344	0cm	0.0735	0.072	-0.181				

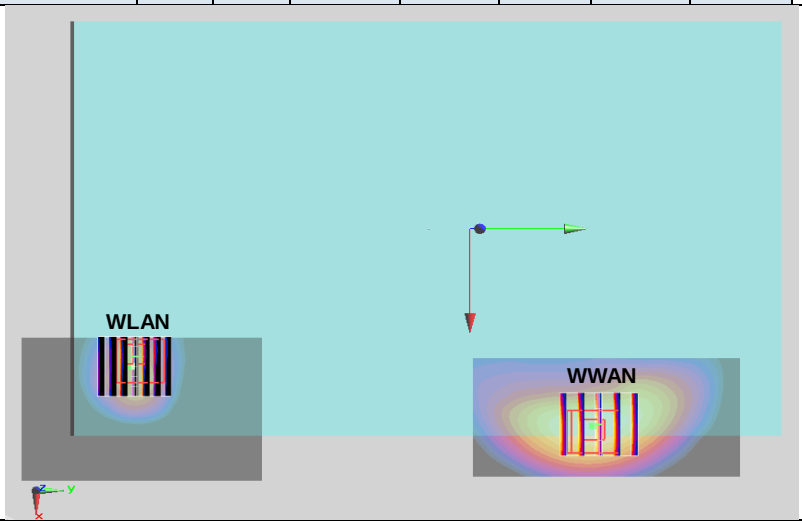

Case 3	Band	Position	SAR (W/kg)	Gap (cm)	SAR peak location (m) X	Y	Z	3D distance (mm)	Summed SAR (W/kg)	SPLSR Results	Simultaneous SAR
	WLAN Antenna B	Bottom Face	0.318	0cm	0.0884	-0.101	-0.179	173.7	1.66	0.01	Not required
	WCDMA V		1.344	0cm	0.0735	0.072	-0.181				

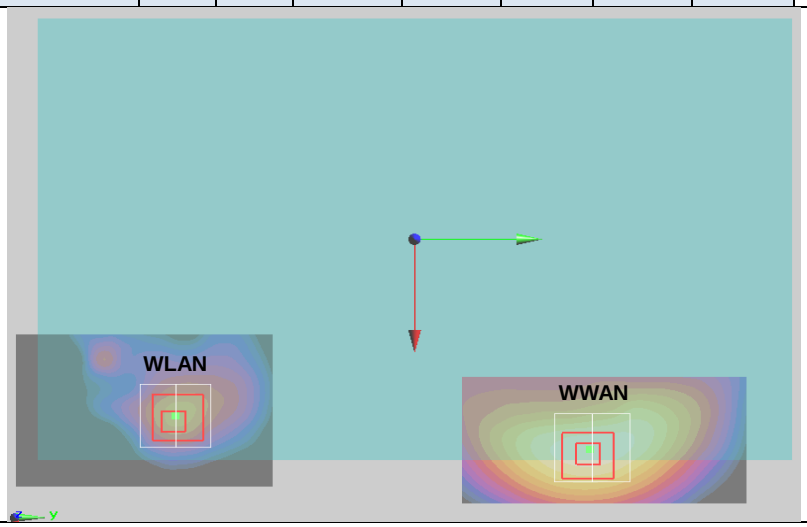

Case 4	Band	Position	SAR (W/kg)	Gap (cm)	Minimum distance (mm)	Summed SAR (W/kg)	SPLSR Results	Simultaneous SAR
	GSM1900	Curved surface of Edge1 at 0cm	1.060	0	120.0	1.68	0.02	Not required
	WLAN Antenna B		0.620	0				

Case 5	Band	Position	SAR (W/kg)	Gap (cm)	Minimum distance (mm)	Summed SAR (W/kg)	SPLSR Results	Simultaneous SAR
	WCDMA V	Curved surface of Edge1 at 1cm	1.388	1	120.0	2.01	0.02	Not required
	WLAN Antenna B		0.620	0				

Case 6	Band	Position	SAR (W/kg)	Gap (cm)	Minimum distance (mm)	Summed SAR (W/kg)	SPLSR Results	Simultaneous SAR
	WCDMA V	Bottom Face at 0cm	1.344	0	120.0	1.71	0.02	Not required
	WLAN Antenna B		0.370	0				

Case 7	Band	Position	SAR (W/kg)	Gap (cm)	Minimum distance (mm)	Summed SAR (W/kg)	SPLSR Results	Simultaneous SAR
	WCDMA V	Curved surface of Edge1 at 0cm	0.982	0	120.0	1.60	0.02	Not required
	WLAN Antenna B		0.620	0				

Case 8	Band	Position	SAR (W/kg)	Gap (cm)	Minimum distance (mm)	Summed SAR (W/kg)	SPLSR Results	Simultaneous SAR
	WCDMA II	Curved surface of Edge1 at 0cm	1.109	0	120.0	1.73	0.02	Not required
	WLAN Antenna B		0.620	0				

Case 9	Band	Position	SAR (W/kg)	Gap (cm)	Minimum distance (mm)	Summed SAR (W/kg)	SPLSR Results	Simultaneous SAR
	GSM1900	Curved surface of Edge1 at 0cm	1.06	0	120.0	1.67	0.02	Not required
	WLAN Antenna B		0.610	0				

Case 10	Band	Position	SAR (W/kg)	Gap (cm)	Minimum distance (mm)	Summed SAR (W/kg)	SPLSR Results	Simultaneous SAR
	WCDMA V	Curved surface of Edge1 at 1cm	1.388	1	120.0	2.00	0.02	Not required
	WLAN Antenna B		0.610	0				

Case 13	Band	Position	SAR (W/kg)	Gap (cm)	Minimum distance (mm)	Summed SAR (W/kg)	SPLSR Results	Simultaneous SAR
	WCDMA V	Curved surface of Edge1 at 1cm	1.388	1	147.0	1.62	0.01	Not required
	WLAN Antenna A		0.230	0				

Case 11	Band	Position	SAR (W/kg)	Gap (cm)	Minimum distance (mm)	Summed SAR (W/kg)	SPLSR Results	Simultaneous SAR
	WCDMA V	Bottom Face at 0cm	1.344	0	120.0	1.70	0.02	Not required
	WLAN Antenna B		0.360	0				

Case 12	Band	Position	SAR (W/kg)	Gap (cm)	Minimum distance (mm)	Summed SAR (W/kg)	SPLSR Results	Simultaneous SAR
	WCDMA II	Curved surface of Edge1 at 0cm	1.109	0	120.0	1.72	0.02	Not required
	WLAN Antenna B		0.610	0				

Test Engineer： Frank Wu, Bevis Chang, and Angelo Chang

17. Uncertainty Assessment

The component of uncertainly may generally be categorized according to the methods used to evaluate them. The evaluation of uncertainly by the statistical analysis of a series of observations is termed a Type An evaluation of uncertainty. The evaluation of uncertainty by means other than the statistical analysis of a series of observation is termed a Type B evaluation of uncertainty. Each component of uncertainty, however evaluated, is represented by an estimated standard deviation, termed standard uncertainty, which is determined by the positive square root of the estimated variance.

A Type A evaluation of standard uncertainty may be based on any valid statistical method for treating data. This includes calculating the standard deviation of the mean of a series of independent observations; using the method of least squares to fit a curve to the data in order to estimate the parameter of the curve and their standard deviations; or carrying out an analysis of variance in order to identify and quantify random effects in certain kinds of measurement.

A type B evaluation of standard uncertainty is typically based on scientific judgment using all of the relevant information available. These may include previous measurement data, experience, and knowledge of the behavior and properties of relevant materials and instruments, manufacture's specification, data provided in calibration reports and uncertainties assigned to reference data taken from handbooks. Broadly speaking, the uncertainty is either obtained from an outdoor source or obtained from an assumed distribution, such as the normal distribution, rectangular or triangular distributions indicated in table below.

Uncertainty Distributions	Normal	Rectangular	Triangular	U-Shape
Multi-plying Factor[(a)]	1/k[(b)]	1/√3	1/√6	1/√2

(a) standard uncertainty is determined as the product of the multiplying factor and the estimated range of variations in the measured quantity

(b) κ is the coverage factor

Table 17.1. Standard Uncertainty for Assumed Distribution

The combined standard uncertainty of the measurement result represents the estimated standard deviation of the result. It is obtained by combining the individual standard uncertainties of both Type A and Type B evaluation using the usual "root-sum-squares" (RSS) methods of combining standard deviations by taking the positive square root of the estimated variances.

Expanded uncertainty is a measure of uncertainty that defines an interval about the measurement result within which the measured value is confidently believed to lie. It is obtained by multiplying the combined standard uncertainty by a coverage factor. Typically, the coverage factor ranges from 2 to 3. Using a coverage factor allows the true value of a measured quantity to be specified with a defined probability within the specified uncertainty range. For purpose of this document, a coverage factor two is used, which corresponds to confidence interval of about 95 %. The DASY uncertainty Budget is shown in the following tables.

Error Description	Uncertainty Value (±%)	Probability Distribution	Divisor	Ci (1g)	Ci (10g)	Standard Uncertainty (1g)	Standard Uncertainty (10g)
Measurement System							
Probe Calibration	6.0	Normal	1	1	1	± 6.0 %	± 6.0 %
Axial Isotropy	4.7	Rectangular	√3	0.7	0.7	± 1.9 %	± 1.9 %
Hemispherical Isotropy	9.6	Rectangular	√3	0.7	0.7	± 3.9 %	± 3.9 %
Boundary Effects	1.0	Rectangular	√3	1	1	± 0.6 %	± 0.6 %
Linearity	4.7	Rectangular	√3	1	1	± 2.7 %	± 2.7 %
System Detection Limits	1.0	Rectangular	√3	1	1	± 0.6 %	± 0.6 %
Readout Electronics	0.3	Normal	1	1	1	± 0.3 %	± 0.3 %
Response Time	0.8	Rectangular	√3	1	1	± 0.5 %	± 0.5 %
Integration Time	2.6	Rectangular	√3	1	1	± 1.5 %	± 1.5 %
RF Ambient Noise	3.0	Rectangular	√3	1	1	± 1.7 %	± 1.7 %
RF Ambient Reflections	3.0	Rectangular	√3	1	1	± 1.7 %	± 1.7 %
Probe Positioner	0.4	Rectangular	√3	1	1	± 0.2 %	± 0.2 %
Probe Positioning	2.9	Rectangular	√3	1	1	± 1.7 %	± 1.7 %
Max. SAR Eval.	1.0	Rectangular	√3	1	1	± 0.6 %	± 0.6 %
Test Sample Related							
Device Positioning	2.9	Normal	1	1	1	± 2.9 %	± 2.9 %
Device Holder	3.6	Normal	1	1	1	± 3.6 %	± 3.6 %
Power Drift	5.0	Rectangular	√3	1	1	± 2.9 %	± 2.9 %
Phantom and Setup							
Phantom Uncertainty	4.0	Rectangular	√3	1	1	± 2.3 %	± 2.3 %
Liquid Conductivity (Target)	5.0	Rectangular	√3	0.64	0.43	± 1.8 %	± 1.2 %
Liquid Conductivity (Meas.)	2.5	Normal	1	0.64	0.43	± 1.6 %	± 1.1 %
Liquid Permittivity (Target)	5.0	Rectangular	√3	0.6	0.49	± 1.7 %	± 1.4 %
Liquid Permittivity (Meas.)	2.5	Normal	1	0.6	0.49	± 1.5 %	± 1.2 %
Combined Standard Uncertainty						± 11.0 %	± 10.8 %
Coverage Factor for 95 %						K=2	
Expanded Uncertainty						**± 22.0 %**	**± 21.5 %**

Table 17.2. Uncertainty Budget for frequency range 300 MHz to 3 GHz

18. References

[1] FCC 47 CFR Part 2 “Frequency Allocations and Radio Treaty Matters; General Rules and Regulations”

[2] ANSI/IEEE Std. C95.1-1992, “IEEE Standard for Safety Levels with Respect to Human Exposure to Radio Frequency Electromagnetic Fields, 3 kHz to 300 GHz”, September 1992

[3] IEEE Std. 1528-2003, “Recommended Practice for Determining the Peak Spatial-Average Specific Absorption Rate (SAR) in the Human Head from Wireless Communications Devices: Measurement Techniques”, December 2003

[4] SPEAG DASY System Handbook

[5] FCC KDB 447498 D01 v05r02, “Mobile and Portable Device RF Exposure Procedures and Equipment Authorization Policies”, Feb 2014

[6] FCC KDB 941225 D01 v02, “SAR Measurement Procedures for 3G Devices – CDMA 2000 / Ev-Do / WCDMA / HSDPA / HSPA”, October 2007

[7] FCC KDB 941225 D02 v02r02, “SAR Guidance for HSPA, HSPA+, DC-HSDPA and 1x-Advanced”, May 2013.

[8] FCC KDB 941225 D03 v01, “Recommended SAR Test Reduction Procedures for GSM / GPRS / EDGE”, December 2008

[9] FCC KDB 616217 D04 v01r01, “SAR Evaluation Considerations for Laptop, Notebook, Netbook and Tablet Computers”, May 2013

[10] FCC KDB 865664 D01 v01r03, "SAR Measurement Requirements for 100 MHz to 6 GHz", Feb 2014.

[11] FCC KDB 865664 D02 v01r01, “RF Exposure Compliance Reporting and Documentation Considerations” May 2013.