#01_WCDMA II_RMC 12.2Kbps_Edge 4_0mm_Ch9538

Communication System: WCDMA ; Frequency: 1907.6 MHz;Duty Cycle: 1:1
Medium: MSL_1900_190401 Medium parameters used: f = 1908 MHz; σ = 1.581 S/m; ε_r = 53.505; ρ = 1000 kg/m^3
Ambient Temperature：23.5 ℃; Liquid Temperature：22.5 ℃

DASY5 Configuration
- Probe: EX3DV4 - SN7306;ConvF(7.87, 7.87, 7.87) ;Calibrated: 2018/7/26
- Sensor-Surface: 1.4mm (Mechanical Surface Detection)
- Electronics: DAE3 Sn495; Calibrated: 2018/5/24
- Phantom: ELI V5.0; Type: QD OVA 002 Ax; Serial: 1191
- Measurement SW: DASY52, Version 52.10 (2); SEMCAD X Version 14.6.12 (7450)

Area Scan (41x81x1): Interpolated grid: dx=1.500 mm, dy=1.500 mm
Maximum value of SAR (interpolated) = 1.19 W/kg

Zoom Scan (5x5x7)/Cube 0: Measurement grid: dx=8mm, dy=8mm, dz=5mm
Reference Value = 20.54 V/m; Power Drift = -0.14 dB
Peak SAR (extrapolated) = 2.25 W/kg
SAR(1 g) = 0.967 W/kg; SAR(10 g) = 0.439 W/kg
Maximum value of SAR (measured) = 1.74 W/kg

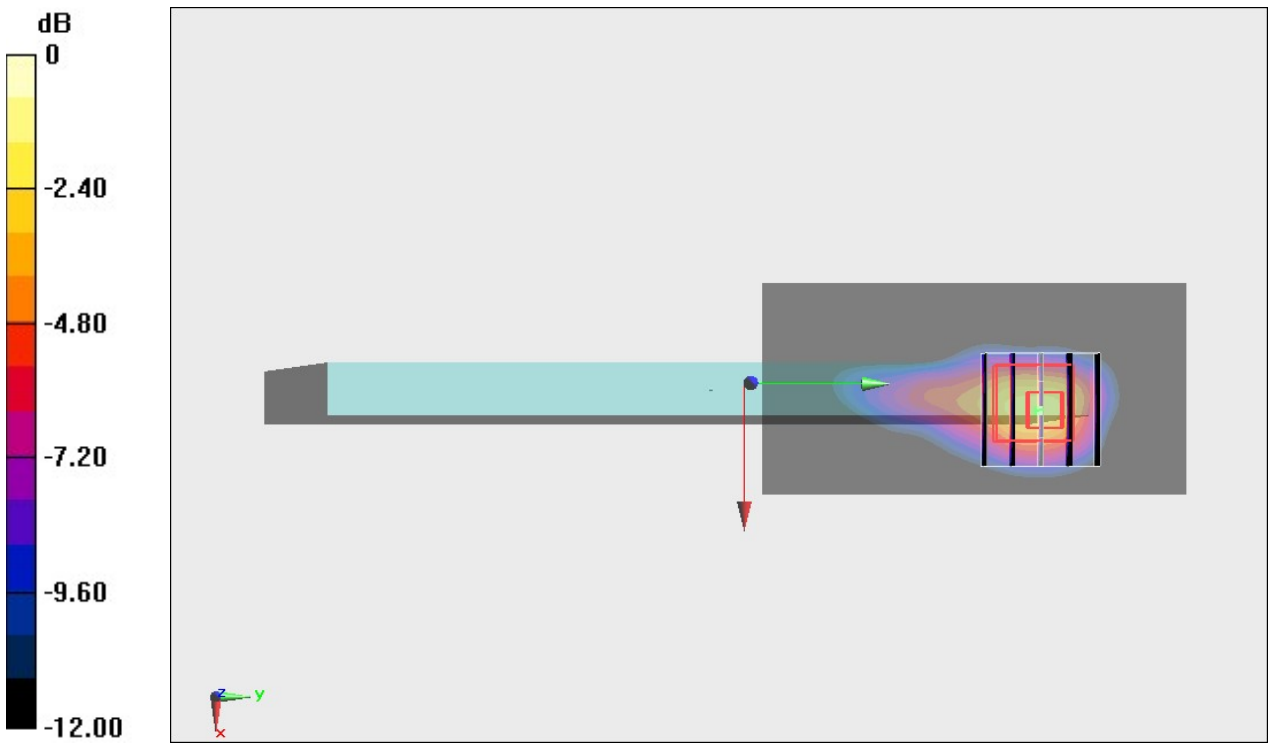

0 dB = 1.74 W/kg = 2.41 dBW/kg

#02_WCDMA IV_RMC 12.2Kbps_Edge 4_0mm_Ch1513

Communication System: WCDMA ; Frequency: 1752.6 MHz;Duty Cycle: 1:1
Medium: MSL_1750_190401 Medium parameters used: f = 1753 MHz; σ = 1.492 S/m; ε_r = 54.648; ρ = 1000 kg/m^3
Ambient Temperature：23.5 ℃; Liquid Temperature：22.5 ℃

DASY5 Configuration
- Probe: EX3DV4 - SN7306;ConvF(8.22, 8.22, 8.22) ;Calibrated: 2018/7/26
- Sensor-Surface: 1.4mm (Mechanical Surface Detection)
- Electronics: DAE3 Sn495; Calibrated: 2018/5/24
- Phantom: ELI V5.0; Type: QD OVA 002 Ax; Serial: 1191
- Measurement SW: DASY52, Version 52.10 (2); SEMCAD X Version 14.6.12 (7450)

Area Scan (41x81x1): Interpolated grid: dx=1.500 mm, dy=1.500 mm
Maximum value of SAR (interpolated) = 1.09 W/kg

Zoom Scan (5x5x7)/Cube 0: Measurement grid: dx=8mm, dy=8mm, dz=5mm
Reference Value = 21.15 V/m; Power Drift = -0.14 dB
Peak SAR (extrapolated) = 1.97 W/kg
SAR(1 g) = 0.865 W/kg; SAR(10 g) = 0.418 W/kg
Maximum value of SAR (measured) = 1.51 W/kg

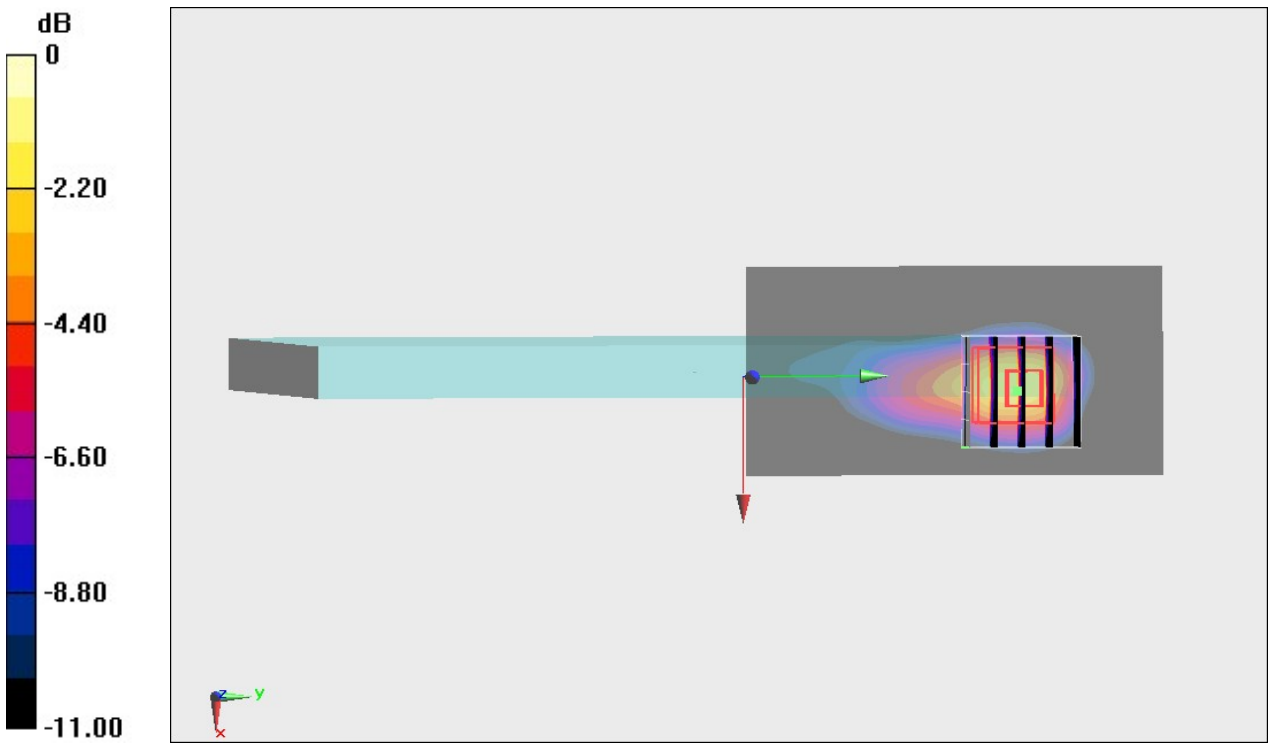

0 dB = 1.51 W/kg = 1.79 dBW/kg

#03_WCDMA V_RMC 12.2Kbps_Edge 4_0mm_Ch4182

Communication System: WCDMA ; Frequency: 836.4 MHz;Duty Cycle: 1:1
Medium: MSL_850_190402 Medium parameters used : f = 836.4 MHz; σ = 0.981 S/m; ε_r = 54.011; ρ = 1000 kg/m^3
Ambient Temperature：23.6 ℃; Liquid Temperature：22.6 ℃

DASY5 Configuration
- Probe: EX3DV4 - SN7306;ConvF(9.82, 9.82, 9.82) ;Calibrated: 2018/7/26
- Sensor-Surface: 1.4mm (Mechanical Surface Detection)
- Electronics: DAE3 Sn495; Calibrated: 2018/5/24
- Phantom: ELI V5.0; Type: QD OVA 002 Ax; Serial: 1191
- Measurement SW: DASY52, Version 52.10 (2); SEMCAD X Version 14.6.12 (7450)

Area Scan (41x81x1): Interpolated grid: dx=1.500 mm, dy=1.500 mm
Maximum value of SAR (interpolated) = 3.50 W/kg

Zoom Scan (5x5x7)/Cube 0: Measurement grid: dx=8mm, dy=8mm, dz=5mm
Reference Value = 60.96 V/m; Power Drift = -0.17 dB
Peak SAR (extrapolated) = 4.57 W/kg
SAR(1 g) = 0.739 W/kg; SAR(10 g) = 0.271 W/kg
Maximum value of SAR (measured) = 3.00 W/kg

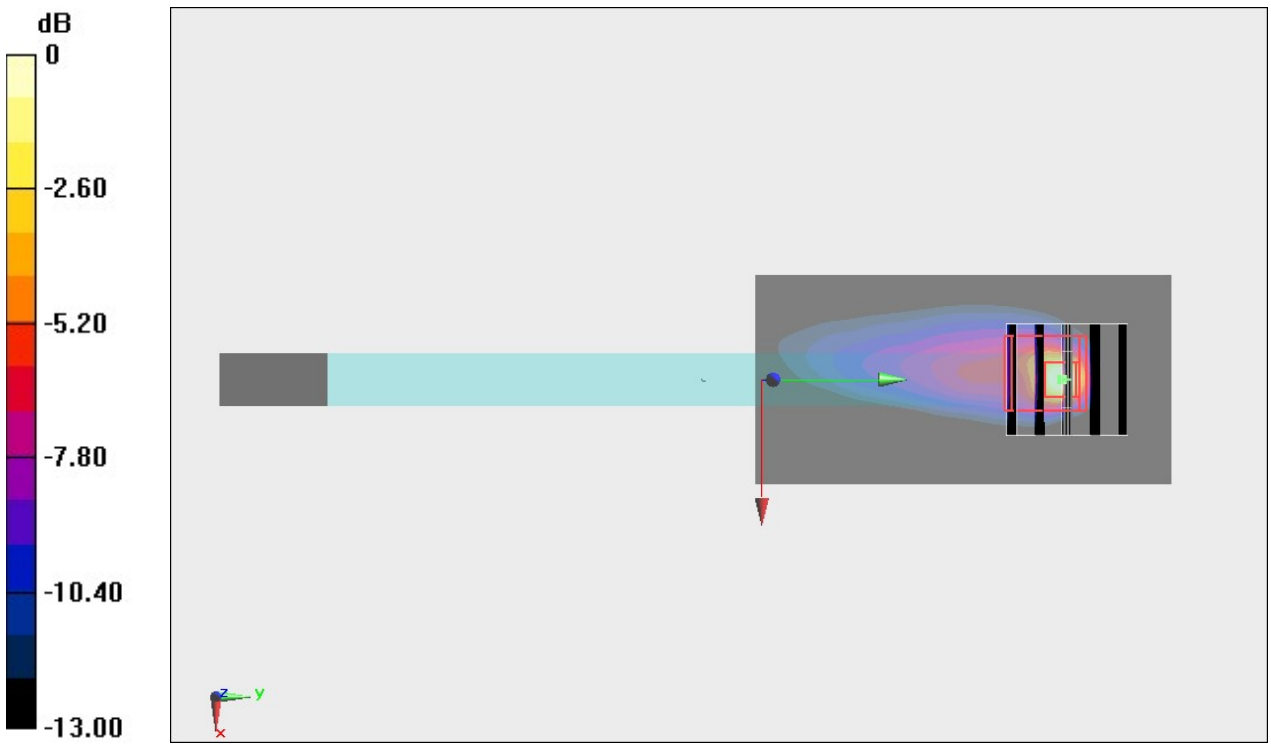

0 dB = 3.00 W/kg = 4.77 dBW/kg

#04_LTE Band 2_20M_QPSK_50_0_Edge 4_0mm_Ch19100

Communication System: LTE ; Frequency: 1900 MHz;Duty Cycle: 1:1
Medium: MSL_1900_190401 Medium parameters used: f = 1900 MHz; σ = 1.573 S/m; ε_r = 53.528; ρ = 1000 kg/m^3
Ambient Temperature：23.5 ℃; Liquid Temperature：22.5 ℃

DASY5 Configuration
- Probe: EX3DV4 - SN7306;ConvF(7.87, 7.87, 7.87) ;Calibrated: 2018/7/26
- Sensor-Surface: 1.4mm (Mechanical Surface Detection)
- Electronics: DAE3 Sn495; Calibrated: 2018/5/24
- Phantom: ELI V5.0; Type: QD OVA 002 Ax; Serial: 1191
- Measurement SW: DASY52, Version 52.10 (2); SEMCAD X Version 14.6.12 (7450)

Area Scan (41x81x1): Interpolated grid: dx=1.500 mm, dy=1.500 mm
Maximum value of SAR (interpolated) = 1.55 W/kg

Zoom Scan (5x5x7)/Cube 0: Measurement grid: dx=8mm, dy=8mm, dz=5mm
Reference Value = 22.18 V/m; Power Drift = -0.14 dB
Peak SAR (extrapolated) = 3.05 W/kg
SAR(1 g) = 1.27 W/kg; SAR(10 g) = 0.558 W/kg
Maximum value of SAR (measured) = 2.38 W/kg

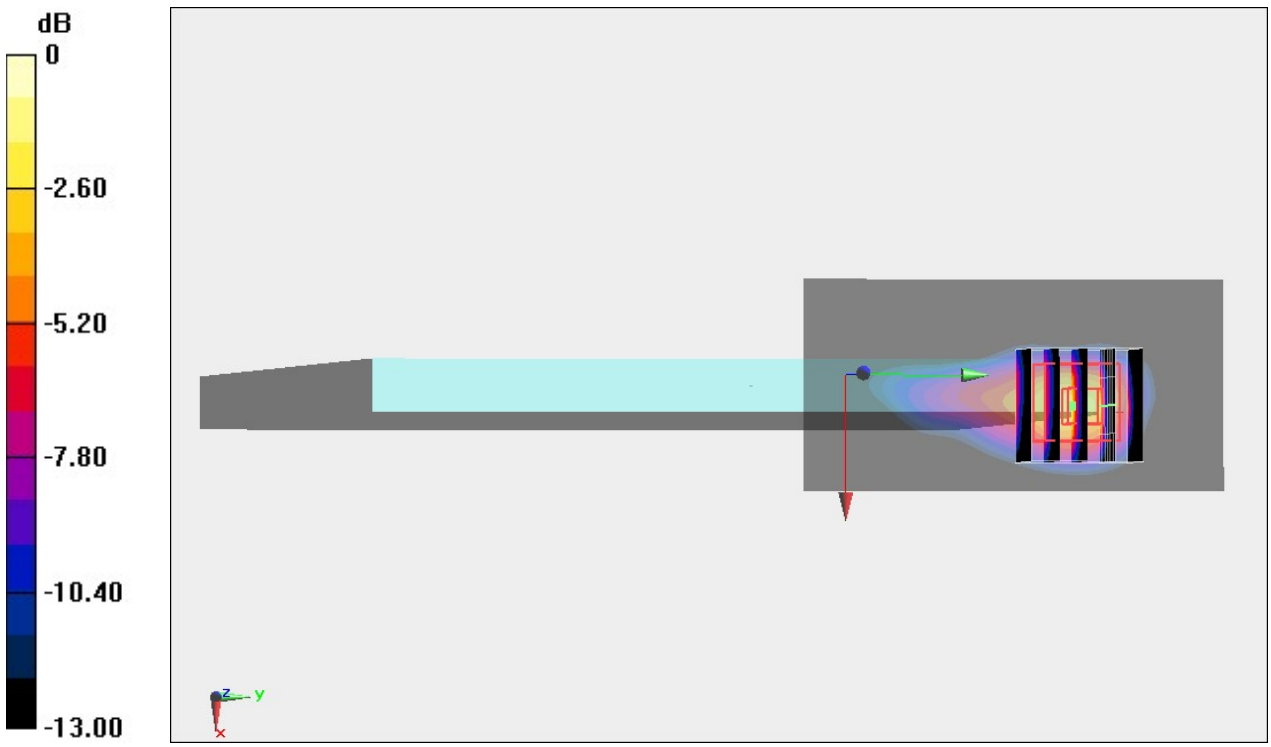

0 dB = 2.38 W/kg = 3.77 dBW/kg

#05_LTE Band 7_20M_QPSK_50_0_Edge 1_0mm_Ch21100

Communication System: LTE; Frequency: 2535 MHz;Duty Cycle: 1:1
Medium: MSL_2600_190407 Medium parameters used: f = 2535 MHz; σ = 2.081 S/m; ε_r = 52.465; ρ = 1000 kg/m^3
Ambient Temperature：23.8 ℃; Liquid Temperature：22.8 ℃

DASY5 Configuration:
- Probe: EX3DV4 - SN3931; ConvF(7.43, 7.43, 7.43) ; Calibrated: 2018/9/27
- Sensor-Surface: 1.4mm (Mechanical Surface Detection)
- Electronics: DAE4 Sn1399; Calibrated: 2018/11/16
- Phantom: ELI v4.0; Type: QDOVA001BB; Serial: 1026
- Measurement SW: DASY52, Version 52.10 (1);SEMCAD X Version 14.6.11 (7439)

Area Scan (51x121x1): Interpolated grid: dx=1.200 mm, dy=1.200 mm
Maximum value of SAR (interpolated) = 0.734 W/kg

Zoom Scan (7x7x7)/Cube 0: Measurement grid: dx=5mm, dy=5mm, dz=5mm
Reference Value = 14.65 V/m; Power Drift = -0.05 dB
Peak SAR (extrapolated) = 0.912 W/kg
SAR(1 g) = 0.409 W/kg; SAR(10 g) = 0.174 W/kg
Maximum value of SAR (measured) = 0.736 W/kg

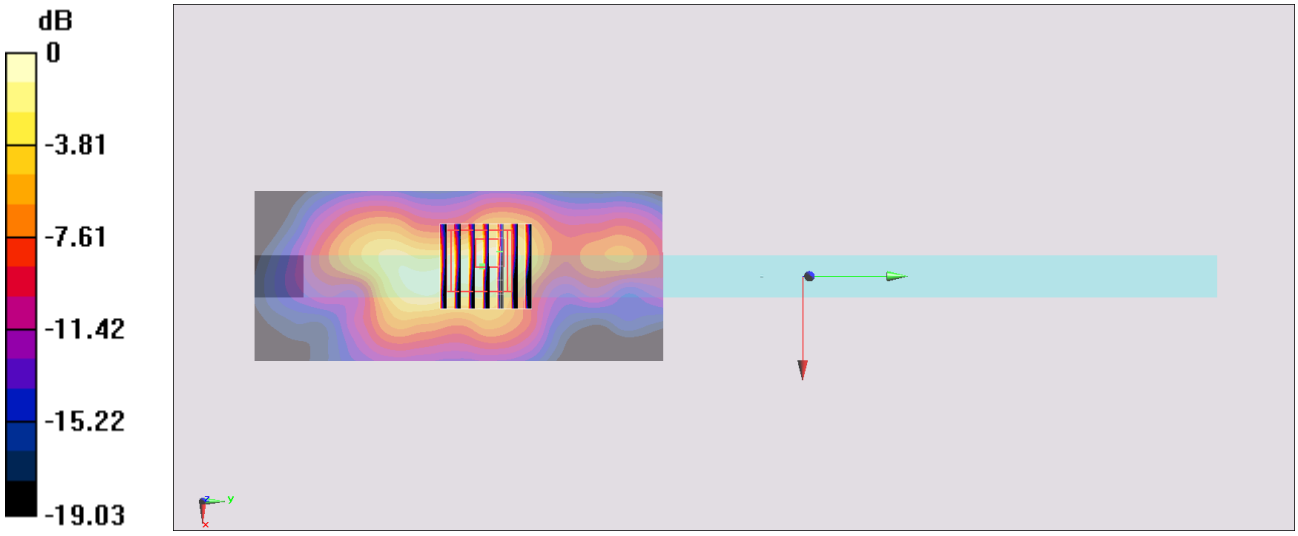

0 dB = 0.736 W/kg = -1.33 dBW/kg

#06_LTE Band 12_10M_QPSK_25_0_Edge 4_0mm_Ch23095

Communication System: LTE; Frequency: 707.5 MHz;Duty Cycle: 1:1
Medium: MSL_750_190402 Medium parameters used: f = 707.5 MHz; σ = 0.931 S/m; ε_r = 53.912; ρ = 1000 kg/m^3
Ambient Temperature：23.6 ℃; Liquid Temperature：22.6 ℃

DASY5 Configuration
- Probe: EX3DV4 - SN7306;ConvF(10.06, 10.06, 10.06) ;Calibrated: 2018/7/26
- Sensor-Surface: 1.4mm (Mechanical Surface Detection)
- Electronics: DAE3 Sn495; Calibrated: 2018/5/24
- Phantom: ELI V5.0; Type: QD OVA 002 Ax; Serial: 1191
- Measurement SW: DASY52, Version 52.10 (2); SEMCAD X Version 14.6.12 (7450)

Area Scan (41x81x1): Interpolated grid: dx=1.500 mm, dy=1.500 mm
Maximum value of SAR (interpolated) = 6.01 W/kg

Zoom Scan (5x5x7)/Cube 0: Measurement grid: dx=8mm, dy=8mm, dz=5mm
Reference Value = 81.00 V/m; Power Drift = -0.01 dB
Peak SAR (extrapolated) = 10.7 W/kg
SAR(1 g) = 1.19 W/kg; SAR(10 g) = 0.359 W/kg
Maximum value of SAR (measured) = 6.54 W/kg

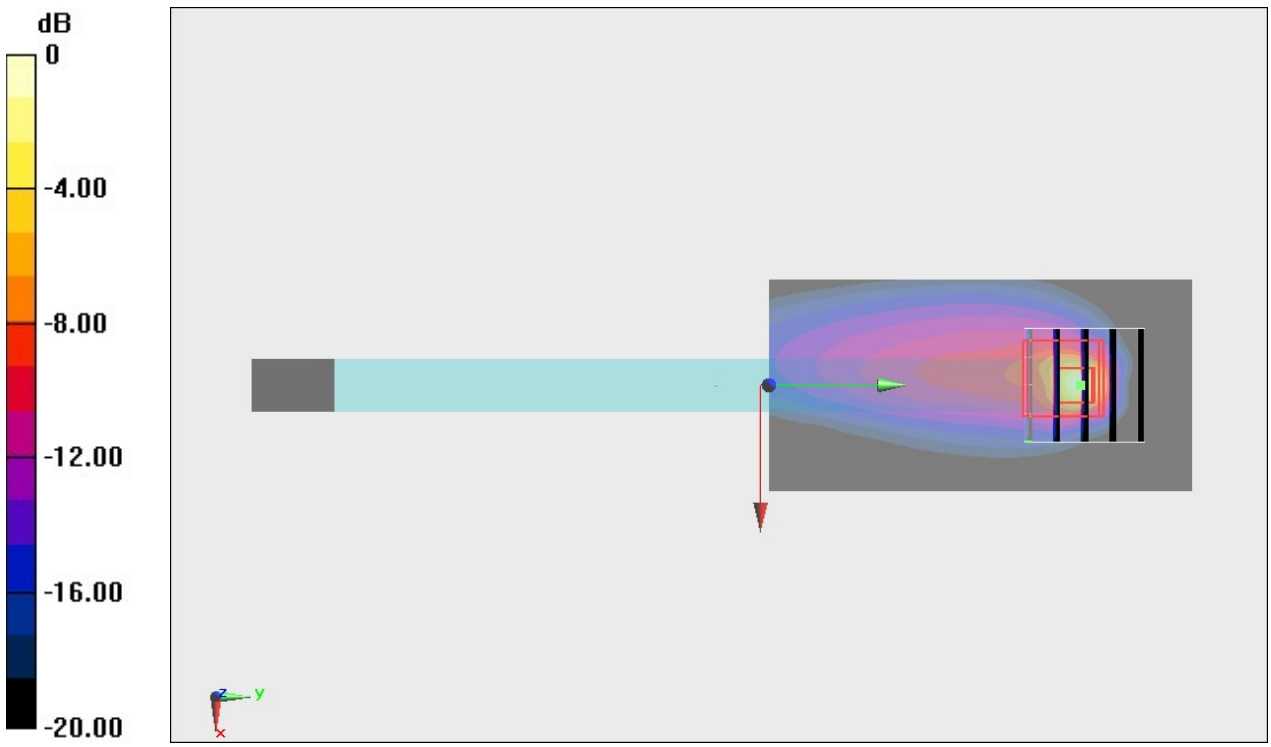

0 dB = 6.54 W/kg = 8.16 dBW/kg

#07_LTE Band 13_10M_QPSK_25_0_Edge 4_0mm_Ch23230

Communication System: LTE; Frequency: 782 MHz;Duty Cycle: 1:1
Medium: MSL_750_190402 Medium parameters used: f = 782 MHz; σ = 1.001 S/m; ε_r = 53.204; ρ = 1000 kg/m^3
Ambient Temperature：23.6 ℃; Liquid Temperature：22.6 ℃

DASY5 Configuration
- Probe: EX3DV4 - SN7306;ConvF(10.06, 10.06, 10.06) ;Calibrated: 2018/7/26
- Sensor-Surface: 1.4mm (Mechanical Surface Detection)
- Electronics: DAE3 Sn495; Calibrated: 2018/5/24
- Phantom: ELI V5.0; Type: QD OVA 002 Ax; Serial: 1191
- Measurement SW: DASY52, Version 52.10 (2); SEMCAD X Version 14.6.12 (7450)

Area Scan (41x81x1): Interpolated grid: dx=1.500 mm, dy=1.500 mm
Maximum value of SAR (interpolated) = 3.80 W/kg

Zoom Scan (5x5x7)/Cube 0: Measurement grid: dx=8mm, dy=8mm, dz=5mm
Reference Value = 59.68 V/m; Power Drift = -0.13 dB
Peak SAR (extrapolated) = 6.55 W/kg
SAR(1 g) = 0.865 W/kg; SAR(10 g) = 0.287 W/kg
Maximum value of SAR (measured) = 4.18 W/kg

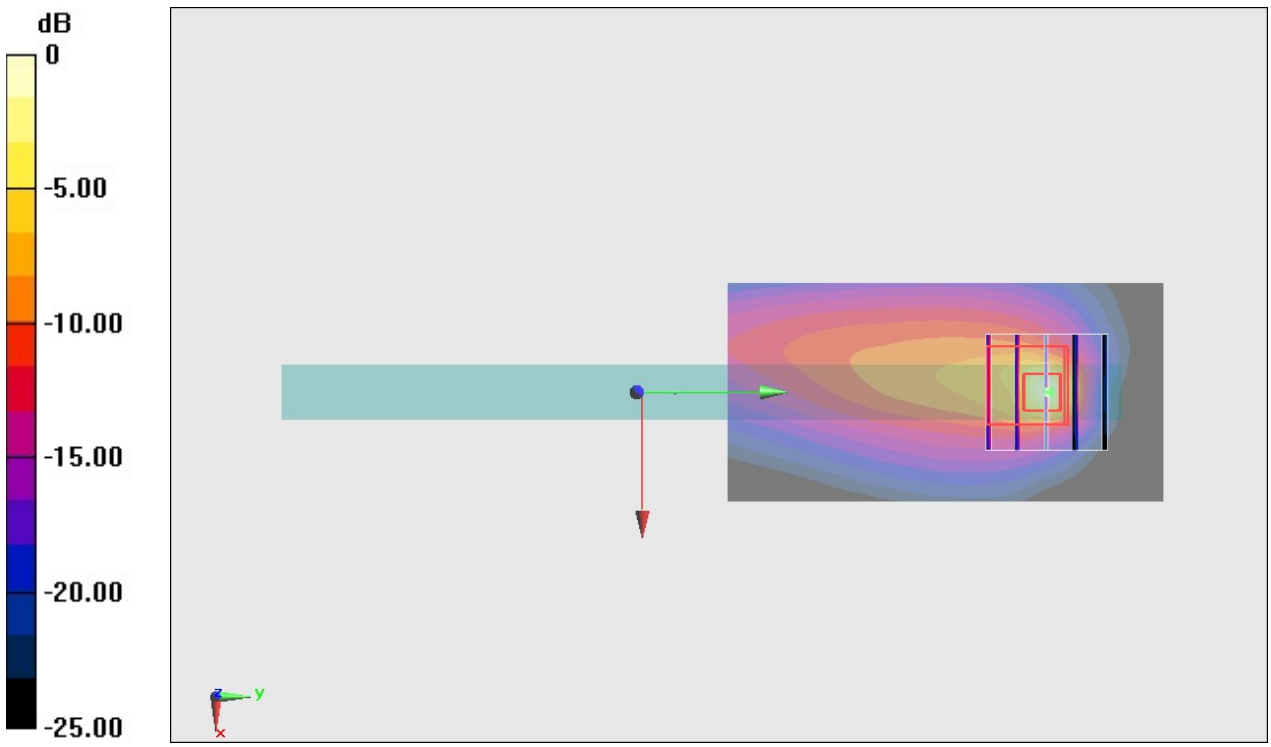

0 dB = 4.18 W/kg = 6.21 dBW/kg

Test Laboratory: Sporton International Inc. SAR/HAC Testing Lab Date: 2019/4/2

#08_LTE Band 26_15M_QPSK_1_0_Edge 4_0mm_Ch26865

Communication System: LTE; Frequency: 831.5 MHz;Duty Cycle: 1:1
Medium: MSL_850_190402 Medium parameters used: f = 831.5 MHz; σ = 0.976 S/m; ε_r = 54.069; ρ = 1000 kg/m^3
Ambient Temperature：23.6 ℃; Liquid Temperature：22.6 ℃

DASY5 Configuration
- Probe: EX3DV4 - SN7306;ConvF(9.82, 9.82, 9.82) ;Calibrated: 2018/7/26
- Sensor-Surface: 1.4mm (Mechanical Surface Detection)
- Electronics: DAE3 Sn495; Calibrated: 2018/5/24
- Phantom: ELI V5.0; Type: QD OVA 002 Ax; Serial: 1191
- Measurement SW: DASY52, Version 52.10 (2); SEMCAD X Version 14.6.12 (7450)

Area Scan (41x81x1): Interpolated grid: dx=1.500 mm, dy=1.500 mm
Maximum value of SAR (interpolated) = 0.606 W/kg

Zoom Scan (5x5x7)/Cube 0: Measurement grid: dx=8mm, dy=8mm, dz=5mm
Reference Value = 19.98 V/m; Power Drift = -0.13 dB
Peak SAR (extrapolated) = 3.33 W/kg
SAR(1 g) = 0.621 W/kg; SAR(10 g) = 0.249 W/kg
Maximum value of SAR (measured) = 1.95 W/kg

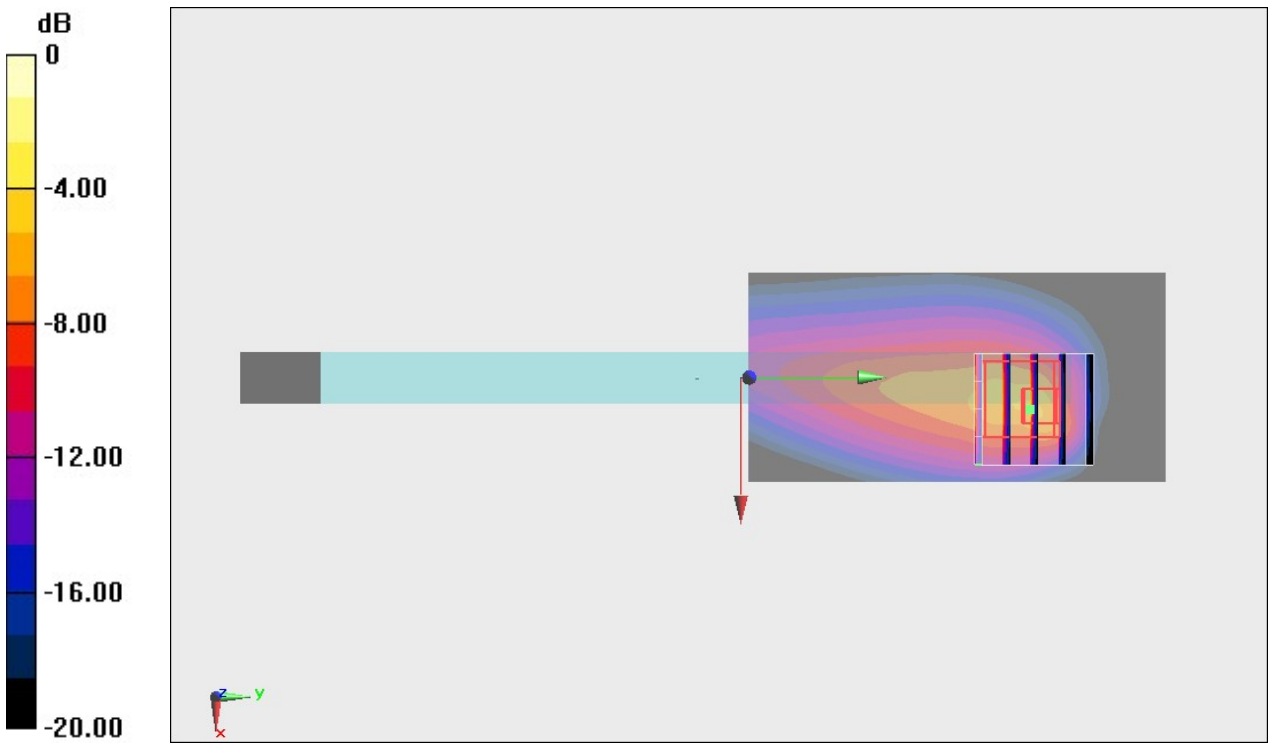

0 dB = 1.95 W/kg = 2.90 dBW/kg

#09_LTE Band 30_10M_QPSK_50_0_Edge 4_0mm_Ch27710

Communication System: LTE; Frequency: 2310 MHz;Duty Cycle: 1:1
Medium: MSL_2300_190407 Medium parameters used: f = 2310 MHz; σ = 1.789 S/m; ε_r = 52.782; ρ = 1000 kg/m^3
Ambient Temperature：23.6 ℃; Liquid Temperature：22.6 ℃

DASY5 Configuration:
- Probe: EX3DV4 - SN3931; ConvF(7.87, 7.87, 7.87) ; Calibrated: 2018/9/27
- Sensor-Surface: 1.4mm (Mechanical Surface Detection)
- Electronics: DAE4 Sn1399; Calibrated: 2018/11/16
- Phantom: ELI v4.0; Type: QDOVA001BB; Serial: 1026
- Measurement SW: DASY52, Version 52.10 (1);SEMCAD X Version 14.6.11 (7439)

Area Scan (51x91x1): Interpolated grid: dx=1.200 mm, dy=1.200 mm
Maximum value of SAR (interpolated) = 1.92 W/kg

Zoom Scan (7x7x7)/Cube 0: Measurement grid: dx=5mm, dy=5mm, dz=5mm
Reference Value = 24.76 V/m; Power Drift = 0.15 dB
Peak SAR (extrapolated) = 3.35 W/kg
SAR(1 g) = 0.868 W/kg; SAR(10 g) = 0.389 W/kg
Maximum value of SAR (measured) = 2.02 W/kg

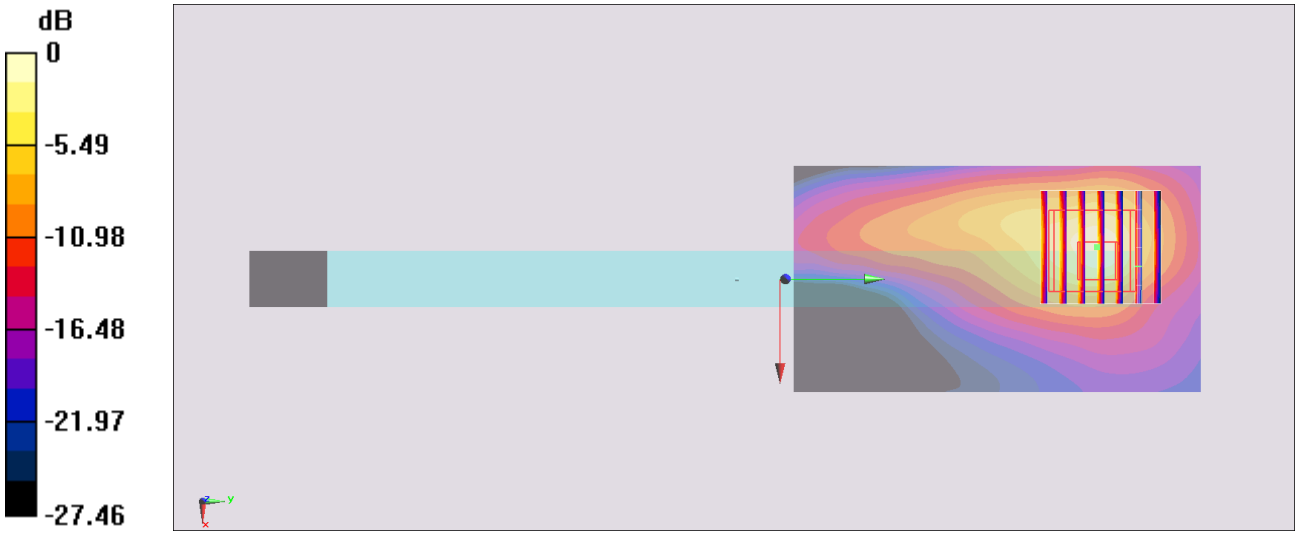

0 dB = 2.02 W/kg = 3.05 dBW/kg

#10_LTE Band 66_20M_QPSK_1_0_Edge 4_0mm_Ch132322

Communication System: LTE; Frequency: 1745 MHz;Duty Cycle: 1:1
Medium: MSL_1750_190401 Medium parameters used : f = 1745 MHz; σ = 1.483 S/m; ε_r = 54.664; ρ = 1000 kg/m^3
Ambient Temperature：23.5 ℃; Liquid Temperature：22.5 ℃

DASY5 Configuration
- Probe: EX3DV4 - SN7306;ConvF(8.22, 8.22, 8.22) ;Calibrated: 2018/7/26
- Sensor-Surface: 1.4mm (Mechanical Surface Detection)
- Electronics: DAE3 Sn495; Calibrated: 2018/5/24
- Phantom: ELI V5.0; Type: QD OVA 002 Ax; Serial: 1191
- Measurement SW: DASY52, Version 52.10 (2); SEMCAD X Version 14.6.12 (7450)

Area Scan (41x81x1): Interpolated grid: dx=1.500 mm, dy=1.500 mm
Maximum value of SAR (interpolated) = 1.68 W/kg

Zoom Scan (5x5x7)/Cube 0: Measurement grid: dx=8mm, dy=8mm, dz=5mm
Reference Value = 25.96 V/m; Power Drift = -0.07 dB
Peak SAR (extrapolated) = 2.65 W/kg
SAR(1 g) = 1.26 W/kg; SAR(10 g) = 0.598 W/kg
Maximum value of SAR (measured) = 2.05 W/kg

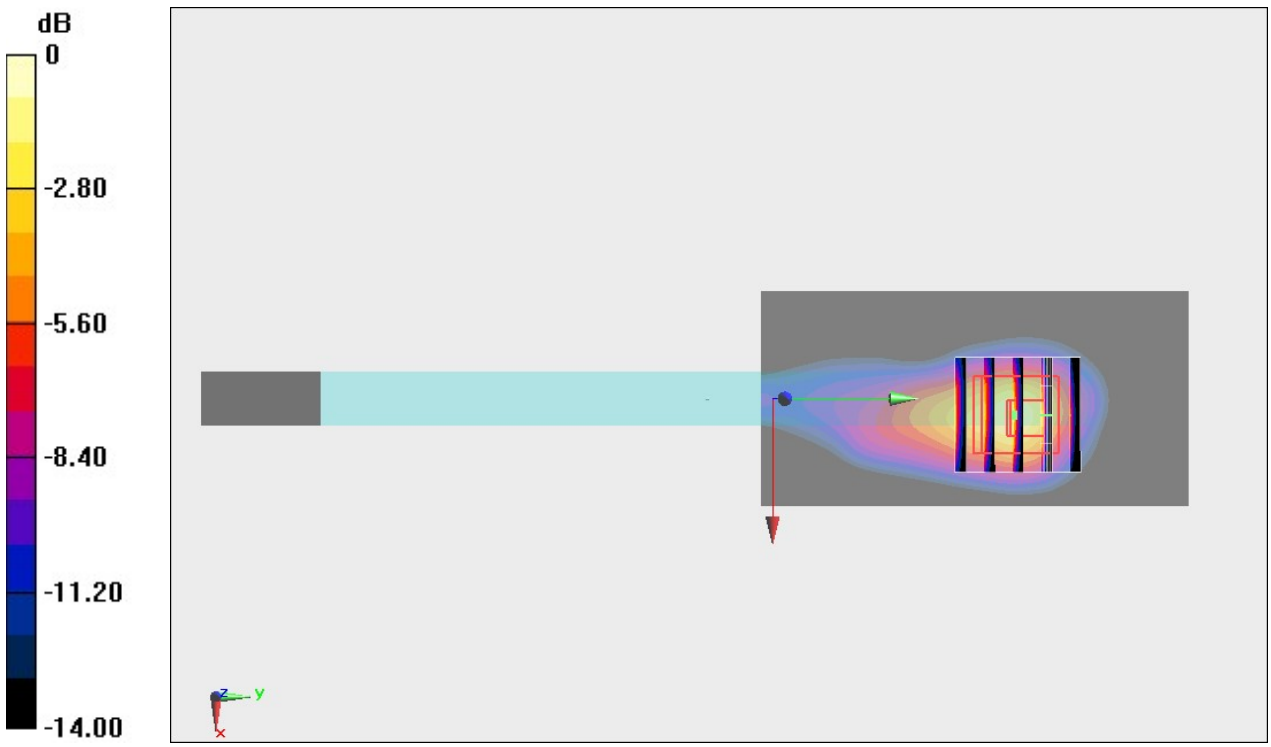

0 dB = 2.05 W/kg = 3.12 dBW/kg

#11_LTE Band 41_20M_QPSK_50_0_Edge 1_0mm_Ch40185

Communication System: LTE; Frequency: 2549.5 MHz;Duty Cycle: 1:1.59
Medium: MSL_2600_190407 Medium parameters used: f = 2550 MHz; σ = 2.103 S/m; ε_r = 52.441; ρ = 1000 kg/m^3
Ambient Temperature：23.8 ℃; Liquid Temperature：22.8 ℃

DASY5 Configuration:
- Probe: EX3DV4 - SN3931; ConvF(7.43, 7.43, 7.43) ; Calibrated: 2018/9/27
- Sensor-Surface: 1.4mm (Mechanical Surface Detection)
- Electronics: DAE4 Sn1399; Calibrated: 2018/11/16
- Phantom: ELI v4.0; Type: QDOVA001BB; Serial: 1026
- Measurement SW: DASY52, Version 52.10 (1);SEMCAD X Version 14.6.11 (7439)

Area Scan (51x101x1): Interpolated grid: dx=1.200 mm, dy=1.200 mm
Maximum value of SAR (interpolated) = 0.814 W/kg

Zoom Scan (7x7x7)/Cube 0: Measurement grid: dx=5mm, dy=5mm, dz=5mm
Reference Value = 18.58 V/m; Power Drift = -0.03 dB
Peak SAR (extrapolated) = 1.22 W/kg
SAR(1 g) = 0.543 W/kg; SAR(10 g) = 0.239 W/kg
Maximum value of SAR (measured) = 0.985 W/kg

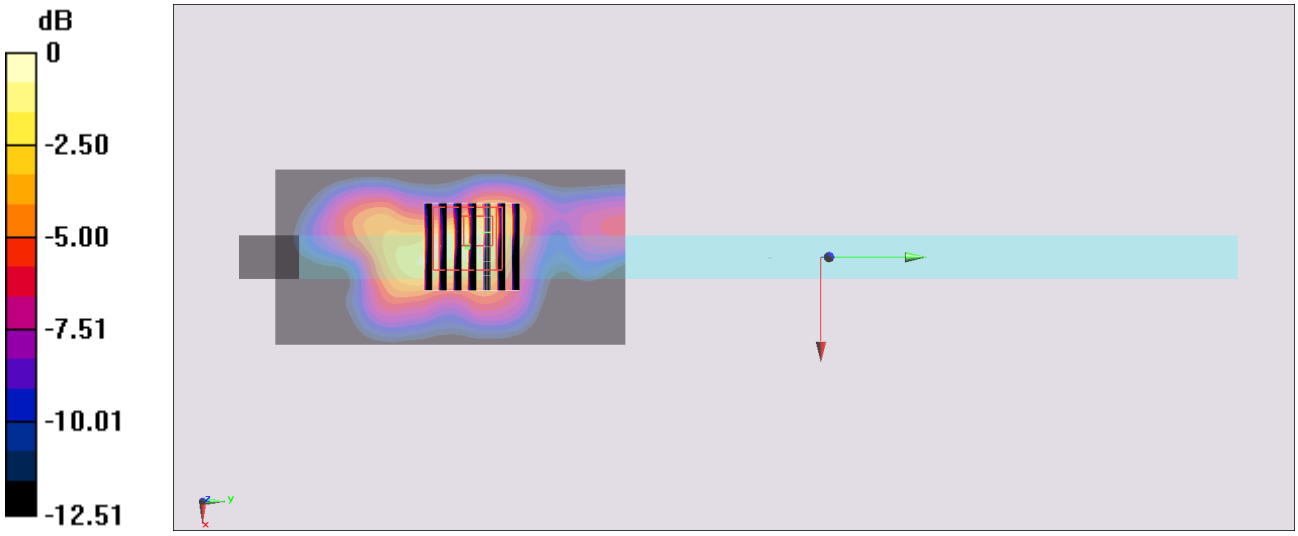

0 dB = 0.985 W/kg = -0.07 dBW/kg