# User Guide

© Copyright 2014 Hewlett-Packard Development Company, L.P.

Bluetooth is a trademark owned by its proprietor and used by Hewlett-Packard Company under license. Intel is a trademark of Intel Corporation in the U.S. and other countries. Microsoft and Windows are U.S. registered trademarks of the Microsoft group of companies.

The information contained herein is subject to change without notice. The only warranties for HP products and services are set forth in the express warranty statements accompanying such products and services. Nothing herein should be construed as constituting an additional warranty. HP shall not be liable for technical or editorial errors or omissions contained herein.

First Edition: August 2014

Document Part Number: 765879-001

**Product notice**

This guide describes features that are common to most models. Some features may not be available on your computer.

Not all features are available in all editions of Windows. This computer may require upgraded and/or separately purchased hardware, drivers and/or software to take full advantage of Windows functionality. Go to http://www.microsoft.com for details.

To access the latest user guide, go to http://www.hp.com/support, and select your country. Select **Drivers & Downloads**, and then follow the on-screen instructions.

**Software terms**

By installing, copying, downloading, or otherwise using any software product preinstalled on this computer, you agree to be bound by the terms of the HP End User License Agreement (EULA). If you do not accept these license terms, your sole remedy is to return the entire unused product (hardware and software) within 14 days for a full refund, subject to the refund policy of your seller.

For any further information or to request a full refund of the price of the computer, please contact your seller.

## Safety warning notice

⚠ **WARNING!** To reduce the possibility of heat-related injuries or of overheating the computer, do not place the computer directly on your lap or obstruct the computer air vents. Use the computer only on a hard, flat surface. Do not allow another hard surface, such as an adjoining optional printer, or a soft surface, such as pillows or rugs or clothing, to block airflow. Also, do not allow the AC adapter to come into contact with the skin or a soft surface, such as pillows or rugs or clothing, during operation. The computer and the AC adapter comply with the user-accessible surface temperature limits defined by the International Standard for Safety of Information Technology Equipment (IEC 60950).

## Processor configuration setting (select models only)

**IMPORTANT:** Select computer models are configured with an Intel® Atom® E3800 processor and a Windows® operating system. On these models, do not change the processor configuration setting in msconfig.exe from 4 or 2 processors to 1 processor. If you do so, your computer will not restart. You will have to perform a factory reset to restore the original settings.

# Table of contents


1 Starting right ..... 1
Visit the HP Apps Store ..... 1
Best practices ..... 1
More HP resources ..... 2

2 Getting to know your computer ..... 4
Locating hardware ..... 4
Locating software ..... 4
Identifying components ..... 5
Using the action keys ..... 11
Labels ..... 12

3 Connecting to a network ..... 14
Connecting to a wireless network ..... 14
Using the wireless controls ..... 14
Wireless button ..... 14
Operating system controls ..... 15
Connecting to a WLAN ..... 15
Using HP Mobile Broadband (select models only) ..... 16
Using Bluetooth wireless devices (select models only) ..... 16
Connecting to a wired network—LAN (select models only) ..... 16
Sharing data and drives and accessing software ..... 17
Sharing media and data across your home group network (select models only) ..... 17

4 Enjoying entertainment features ..... 19
Using a webcam (select models only) ..... 19
Using audio ..... 19
Connecting speakers ..... 19
Connecting headphones ..... 19
Connecting a microphone ..... 20
Connecting headsets ..... 20
Using Beats Audio (select models only) ..... 20
Accessing Beats Audio Control Panel ..... 20
Enabling and disabling Beats Audio ..... 20
Using video ..... 20
Connecting video devices by using a VGA cable (select models only) ..... 21

Connecting video devices using an HDMI cable (select models only) ..... 21
Setting up HDMI audio ..... 22
Connecting digital display devices using a DisplayPort cable (select models only) ..... 23
Connecting Miracast-compatible wireless displays (select models only) ..... 24

5 Navigating the screen ..... 25
Using the TouchPad and touch screen gestures ..... 25
Tap ..... 25
Two-finger scroll ..... 25
Two-finger pinch zoom ..... 26
Two-finger click ..... 26
Right-edge swipe ..... 26
Left-edge swipe ..... 27
Top-edge swipe and bottom-edge swipe ..... 27
One-finger slide (touch screen only) ..... 27
Using a keyboard and optional mouse ..... 28

6 Managing power ..... 29
Initiating and exiting Sleep and Hibernation ..... 29
Manually initiating and exiting Sleep ..... 30
Manually initiating and exiting Hibernation (select models only) ..... 30
Setting password protection on wakeup (exiting Sleep or Hibernation) ..... 30
Using the power meter and power settings ..... 31
Running on battery power ..... 31
Factory-sealed battery (select models only) ..... 31
User-replaceable battery (select models only) ..... 32
Finding battery information ..... 32
Conserving battery power ..... 33
Resolving a low battery level ..... 33
Resolving a low battery level when external power is available ..... 33
Resolving a low battery level when no power source is available ..... 33
Resolving a low battery level when the computer cannot exit Hibernation ..... 33
Storing a user-replaceable battery (select models only) ..... 33
Disposing of a user-replaceable battery (select models only) ..... 34
Running on AC power ..... 34
Troubleshooting power problems ..... 35
Shutting down (turning off) the computer ..... 35

7 Maintaining your computer ..... 37
Improving performance ..... 37

Using Disk Defragmenter ..... 37
Using Disk Cleanup ..... 37
Updating programs and drivers ..... 37
Cleaning your computer ..... 38
Cleaning procedures ..... 38
Cleaning the display ..... 38
Cleaning the sides or cover ..... 39
Cleaning the TouchPad, keyboard, or mouse (select models only) ..... 39
Traveling with or shipping your computer ..... 39

8 Securing your computer and information ..... 41
Using passwords ..... 41
Setting Windows passwords ..... 41
Setting Setup Utility (BIOS) passwords ..... 42
Using the fingerprint reader (select models only) ..... 42
Using Internet security software ..... 42
Using antivirus software ..... 43
Using firewall software ..... 43
Installing software updates ..... 43
Installing critical security updates ..... 43
Securing your wireless network ..... 44
Backing up your software applications and information ..... 44
Using an optional security cable lock ..... 44

9 Using Setup Utility (BIOS) ..... 45
Starting Setup Utility (BIOS) ..... 45
Updating the BIOS ..... 45
Determining the BIOS version ..... 45
Downloading a BIOS update ..... 46

10 Using HP PC Hardware Diagnostics (UEFI) ..... 47
Downloading HP PC Hardware Diagnostics (UEFI) to a USB device ..... 47

11 Backing up, restoring, and recovering ..... 49
Creating recovery media and backups (select models only) ..... 49
Creating HP Recovery media (select models only) ..... 49
Using Windows tools ..... 50
Restore and recover (select models only) ..... 50
Recovering using HP Recovery Manager (select models only) ..... 51
What you need to know ..... 51

Using the HP Recovery partition (select models only) ..... 52
Using HP Recovery media to recover ..... 52
Changing the computer boot order ..... 52

12 Specifications ..... 53
Input power ..... 53
Operating environment ..... 54

13 Electrostatic Discharge ..... 55

Index ..... 56

# 1 Starting right

This computer is a powerful tool designed to enhance your work and entertainment. Read this chapter to learn about best practices after you set up your computer and about where to find additional HP resources.

## Visit the HP Apps Store

The HP Apps Store offers a wide choice of popular games, entertainment and music apps, productivity apps, and apps exclusive to HP that you can download to the Start screen. The selection is updated regularly and includes regional content and country-specific offers. Be sure to check the HP Apps Store frequently for new and updated features.

**IMPORTANT:** You must be connected to the Internet to access the HP Apps Store.

To view and download an app:

1. From the Start screen, select the **Store** app.
2. Select **HP picks** to view all the available apps.

   **NOTE:** **HP picks** is available in select countries only.

3. Select the app you want to download, and then follow the on-screen instructions. When the download is complete, the app appears on the All apps screen.

## Best practices

After you set up and register the computer, we recommend the following steps to get the most out of your smart investment:

- Back up your hard drive by creating recovery media. See Backing up, restoring, and recovering on page 49.
- If you haven't already done so, connect to a wired or wireless network. See details in Connecting to a network on page 14.
- Become familiar with the computer hardware and software. For more information, see Getting to know your computer on page 4 and Enjoying entertainment features on page 19.
- Update or purchase antivirus software. See Using antivirus software on page 43.

# More HP resources

To locate resources that provide product details, how-to information, and more, use this table.

| Resource | Contents |
|---|---|
| *Setup Instructions* | • Overview of computer setup and features |
| Help and Support<br><br>To access Help and Support:<br><br>▲ From the Start screen, type `help`, and then from the Search window, select **Help and Support**. For U.S. support, go to http://www.hp.com/go/contactHP. For worldwide support, go to http://welcome.hp.com/country/us/en/wwcontact_us.html. | • A broad range of how-to information and troubleshooting tips |
| Worldwide support<br><br>To get support in your language, go to http://welcome.hp.com/country/us/en/wwcontact_us.html. | • Online chat with an HP technician<br>• Support telephone numbers<br>• HP service center locations |
| *Safety & Comfort Guide*<br><br>To access this guide:<br><br>1. From the Start screen, type `support`, and then select the **HP Support Assistant** app.<br><br>– or –<br><br>From the Windows desktop, click the question mark icon in the notification area, at the far right of the taskbar.<br><br>2. Select **My computer**, and then select **User guides**.<br><br>– or –<br><br>Go to http://www.hp.com/ergo. | • Proper workstation setup<br>• Guidelines for posture and work habits that increase your comfort and decrease your risk of injury<br>• Electrical and mechanical safety information |
| *Regulatory, Safety and Environmental Notices*<br><br>To access this document:<br><br>1. From the Start screen, type `support`, and then select the **HP Support Assistant** app.<br><br>– or –<br><br>From the Windows desktop, click the question mark icon in the notification area, at the far right of the taskbar.<br><br>2. Select **My computer**, and then select **User guides**. | • Important regulatory notices, including information about proper battery disposal |
| *Limited Warranty**<br><br>To access this document:<br><br>1. From the Start screen, type `support`, and then select the **HP Support Assistant** app.<br><br>– or – | • Specific warranty information about this computer |

| Resource | Contents |
| --- | --- |
| From the Windows desktop, click the question mark icon in the notification area, at the far right of the taskbar.<br>2. Select **My computer**, and then select **Warranty and services**.<br>– or –<br>Go to http://www.hp.com/go/orderdocuments. | |
| *You can find the expressly provided HP Limited Warranty applicable to your product located with the user guides on your computer and/or on the CD/DVD provided in the box. In some countries/regions, HP may provide a printed HP Limited Warranty in the box. For countries/regions where the warranty is not provided in printed format, you may request a printed copy from http://www.hp.com/go/orderdocuments or write to:<br>● **North America**: Hewlett-Packard, MS POD, 11311 Chinden Blvd., Boise, ID 83714, USA<br>● **Europe, Middle East, Africa**: Hewlett-Packard, POD, Via G. Di Vittorio, 9, 20063, Cernusco s/Naviglio (MI), Italy<br>● **Asia Pacific**: Hewlett-Packard, POD, P.O. Box 200, Alexandra Post Office, Singapore 911507<br>When you request a printed copy of your warranty, please include your product number, warranty period (found on your service label), name, and postal address.<br>**IMPORTANT:** Do NOT return your HP product to the addresses above. For U.S. support, go to http://www.hp.com/go/contactHP. For worldwide support, go to http://welcome.hp.com/country/us/en/wwcontact_us.html. | |

# 2 Getting to know your computer

## Locating hardware

To find out what hardware is installed on your computer:

1. From the Start screen, type `control panel`, and then select **Control Panel**.

   – or –

   From the Windows desktop, right-click the **Start** button, and then select **Control Panel**.

2. Select **System and Security**, select **System**, and then click **Device Manager** in the left column.

   A list displays all the devices installed on your computer.

For information about system hardware components and the system BIOS version number, press fn +esc (select models only).

## Locating software

To find out what software is installed on your computer:

▲ From the Start screen, click the down arrow in the lower-left corner of the screen.

– or –

From the Windows desktop, right-click the **Start** button, and then select **Programs and Features**.

# Identifying components

Depending on the model, your computer may have some of the following components. To see which components are specific to your model, refer to the *Setup Instructions* poster provided in the computer box.

| Component | | Description |
|---|---|---|
| | AC adapter light | • On: The AC adapter is connected and the battery is charged.<br>• Off: The computer is using battery power.<br>– or –<br>• White: The computer is connected to external power and the battery is charged from 90 to 99 percent.<br>• Amber: The computer is connected to external power and the battery is charged from 0 to 90 percent.<br>• Blinking amber: A battery that is the only available power source has reached a low battery level. When the battery reaches a critical battery level, the battery light begins blinking rapidly.<br>• Off: The battery is fully charged. |
| | Accessory battery connector | Connects an optional accessory battery. |
| | Action keys | Execute frequently used system functions.<br>NOTE: On select models, the f5 action key turns the radiance backlight keyboard (also known as keyboard backlight) feature off or on. |
| | Airplane mode key (also referred to as the wireless button) | Turns the airplane mode and wireless feature on or off.<br>NOTE: A wireless network must be set up before a wireless connection is possible. |
| | Audio-in (microphone) jack | Connects an optional computer headset microphone, stereo array microphone, or monaural microphone. |
| | Audio-out (headphone) jack | Connects optional powered stereo speakers, headphones, earbuds, a headset, or a television audio cable.<br>WARNING! To reduce the risk of personal injury, adjust the volume before using headphones, earbuds, or a headset. For additional safety information, see the *Regulatory, Safety and Environmental Notices*.<br>To access this document:<br>▲ From the Start screen, type `support`, and then select the **HP Support Assistant** app.<br>– or –<br>From the Windows desktop, click the question mark icon in the notification area, at the far right of the taskbar.<br>NOTE: When a device is connected to a headphone jack, the computer speakers are disabled. |

| Component | | Description |
|---|---|---|
| | Audio-out (headphone)/Audio-in (microphone) jack | Connects optional powered stereo speakers, headphones, earbuds, a headset, or a television audio cable. Also connects an optional headset microphone. This jack does not support optional microphone-only devices.<br><br>**WARNING!** To reduce the risk of personal injury, adjust the volume before putting on headphones, earbuds, or a headset. For additional safety information, refer to the *Regulatory, Safety, and Environmental Notices*.<br><br>To access this document:<br><br>▲ From the Start screen, type `support`, and then select the **HP Support Assistant** app.<br><br>– or –<br><br>From the Windows desktop, click the question mark icon in the notification area, at the far right of the taskbar.<br><br>**NOTE:** When a device is connected to the jack, the computer speakers are disabled.<br><br>**NOTE:** Be sure that the device cable has a 4-conductor connector that supports both audio-out (headphone) and audio-in (microphone). |
| | Battery bay | Holds the battery. |
| | Battery lock | Locks the battery in the battery bay. |
| | Battery release latch | Releases the battery. |
| | Bluetooth® compartment | Contains a Bluetooth device. |
| | Caps lock light | On: Caps lock is on, which switches the keys to all capital letters. |
| | DisplayPort | Connects an optional digital display device, such as a high-performance monitor or projector. |
| | Docking connector | Connects an optional docking device. |
| | esc key | Displays system information when pressed in combination with the fn key. |
| | External monitor port | Connects an external VGA monitor or projector. |
| | Fingerprint reader | Allows a fingerprint logon to Windows, instead of a password logon. |
| | fn key | Executes frequently used system functions when pressed in combination with the esc key, or on select models, the b key or the spacebar. |

| Component | | Description |
|---|---|---|
| | Hard drive light | • Blinking white: The hard drive is being accessed.<br>• Amber: HP 3D DriveGuard has temporarily parked the hard drive. |
| | HDMI port | Connects an optional video or audio device, such as a high-definition television, any compatible digital or audio component, or a high-speed High-Definition Multimedia Interface (HDMI) device. |
| | HP Triple Bass Reflex Subwoofer | Provides superior bass sound. |
| | Integrated numeric keypad | When num lock is on, it can be used like an external numeric keypad. |
| | Internal display switch | Turns off the display and initiates Sleep if the display is closed while the power is on.<br>NOTE: The internal display switch is not visible from the outside of the computer. |
| | Internal microphones | Record sound. |
| | Left control zone | Textured area that allows you to perform additional gestures. |
| | Left TouchPad button | Functions like the left button on an external mouse. |
| | Memory card reader | Reads optional memory cards that enable you to store, manage, share or access information.<br>To insert a card:<br>▲ Hold the card label-side up, with connectors facing the slot, insert the card into the slot, and then push in on the card until it is firmly seated.<br>To remove a card:<br>▲ Press in on the card it until it pops out. |
| | Mute light | • Amber: Computer sound is off.<br>• Off: Computer sound is on. |
| | num lock key | Alternates between the navigational and numeric functions on the integrated numeric keypad. |
| | Optical drive | Depending on your computer model, reads an optical disc or reads and writes to an optical disc.<br>NOTE: For disc compatibility information, go to the Help and Support web page (see More HP resources on page 2). Follow the web page instructions to select your computer model. Select **Drivers & Downloads**, and then follow the on-screen instructions. |
| | Power button | • When the computer is off, press the button to turn on the computer.<br>• When the computer is on, press the button briefly to initiate Sleep.<br>• When the computer is in the Sleep state, press the button briefly to exit Sleep. |

| Component | | Description |
|---|---|---|
| | | • When the computer is in Hibernation, press the button briefly to exit Hibernation.<br><br>CAUTION: Pressing and holding down the power button will result in the loss of unsaved information.<br><br>If the computer has stopped responding and Windows shutdown procedures are ineffective, press and hold the power button down for at least 5 seconds to turn off the computer.<br><br>To learn more about your power settings, see your power options.<br><br>▲ From the Start screen, type `power`, select **Power and sleep settings**, and then select **Power and sleep** from the list of applications.<br><br>– or –<br><br>From the Windows desktop, right-click the **Start** button, and then select **Power Options**. |
| | Power connector | Connects an AC adapter. |
| | Power light | • On: The computer is on.<br>• Blinking: The computer is in the Sleep state, a power-saving state. The computer shuts off power to the display and other components.<br>• Off: The computer is off or in Hibernation. Hibernation is a power-saving state that uses the least amount of power. |
| | Right control zone | Textured area that allows you to perform additional gestures. |
| | Right TouchPad button | Functions like the right button on an external mouse. |
| | RJ-45 (network) jack/status lights | Connects a network cable.<br>• White: The network is connected.<br>• Amber: Activity is occurring on the network. |
| | Security cable slot | Attaches an optional security cable to the computer.<br><br>NOTE: The security cable is designed to act as a deterrent, but it may not prevent the computer from being mishandled or stolen. |
| | Service door | Provides access to the hard drive bay, the wireless local area network (WLAN) module slot, the wireless wide area network (WWAN) module slot, and the memory module slots. |

| Component | | Description |
|---|---|---|
| | | CAUTION: To prevent an unresponsive system, replace the wireless module only with a wireless module authorized for use in the computer by the governmental agency that regulates wireless devices in your country or region. If you replace the module and then receive a warning message, remove the module to restore computer functionality, and then contact support through Help and Support.<br>▲ From the Start screen, type `help`, and then select **Help and Support**.<br>- or -<br>From the Windows desktop, click the question mark icon in the notification area, at the far right of the taskbar. |
| | Service door release latch | Releases the service door. |
| | SIM slot | Supports a wireless subscriber identity module (SIM). The SIM slot is located inside the battery bay. |
| | Speakers | Produce sound. |
| | TouchPad light | On: The TouchPad is off. |
| | TouchPad zone | Reads your finger gestures to move the pointer or activate items on the screen.<br>NOTE: The TouchPad also supports edge-swipe gestures. |
| | USB 2.0 charging (powered) port | Connects an optional USB device, such as a keyboard, mouse, external drive, printer, scanner or USB hub. Standard USB ports will not charge all USB devices or will charge using a low current. Some USB devices require power and require you to use a powered port.<br>NOTE: USB charging ports can also charge select models of cell phones and MP3 players, even when the computer is off. |
| | USB 2.0 port | Connects an optional USB device, such as a keyboard, mouse, external drive, printer, scanner or USB hub. |
| | USB 3.0 charging (powered) port | Connects an optional USB device, such as a keyboard, mouse, external drive, printer, scanner or USB hub. Standard USB ports will not charge all USB devices or will charge using a low current. Some USB devices require power and require you to use a powered port.<br>NOTE: USB charging ports can also charge select models of cell phones and MP3 players, even when the computer is off. |
| | USB 3.0 port | Connects an optional USB device, such as a keyboard, mouse, external drive, printer, scanner or USB hub. |
| | Vents | Enable airflow to cool internal components. |

| Component | | Description |
|---|---|---|
| | | **NOTE:** The computer fan starts up automatically to cool internal components and prevent overheating. The number of vents varies depending on the computer model. It is normal for the internal fan to cycle on and off during routine operation. |
| | Webcam | Records video and captures photographs. Some models allow you to video conference and chat online using streaming video.<br><br>To use the webcam:<br><br>▲ From the Start screen, type `camera`, and then select **Camera** from the list of applications.<br><br>– or –<br><br>From the Windows desktop, click the **Start** button, click **All Programs** to find your webcam software. |
| | Webcam light | On: The webcam is in use. |
| | Windows application key | Displays options for a selected object. |
| | Windows key | Returns you to the Start screen from an open app or the Windows desktop.<br><br>**NOTE:** Pressing the Windows key again will return you to the previous screen. |
| | Wireless light | On: An integrated wireless device, such as a WLAN device and/or a Bluetooth® device, is on.<br><br>**NOTE:** On some models, the wireless light is amber when all wireless devices are off. |
| | WLAN antennas | Send and receive wireless signals to communicate with WLANs.<br><br>**NOTE:** The antennas are not visible from the outside of the computer. For optimal transmission, keep the areas immediately around the antennas free from obstructions. For wireless regulatory notices, see the section of the *Regulatory, Safety, and Environmental Notices* that applies to your country or region.<br><br>To access this document:<br><br>▲ From the Start screen, type `support`, and then select the **HP Support Assistant** app.<br><br>– or –<br><br>From the Windows desktop, click the question mark icon in the notification area, at the far right of the taskbar. |
| | WWAN antennas | Send and receive wireless signals to communicate with WWANs. |

| Component | Description |
|---|---|
| | NOTE: The antennas are not visible from the outside of the computer. For optimal transmission, keep the areas immediately around the antennas free from obstructions. For wireless regulatory notices, see the section of the *Regulatory, Safety, and Environmental Notices* that applies to your country or region.<br><br>To access this document:<br><br>▲ From the Start screen, type `support`, and then select the **HP Support Assistant** app.<br><br>– or –<br><br>From the Windows desktop, click the question mark icon in the notification area, at the far right of the taskbar. |

# Using the action keys

Depending on the model, your computer may have the function key features as described in this table.

An action key performs an assigned function. The icon on each of the action keys illustrates the assigned function for that key.

To use an action key function, press and hold the key.

CAUTION: Use extreme care when making changes in Setup Utility (BIOS). Errors can prevent the computer from operating properly.

NOTE: The action key feature is enabled at the factory. You can disable this feature in Setup Utility (BIOS). Refer to Help and Support for additional information.

After you have disabled the action key feature, you can still perform each function by pressing the fn key in combination with the appropriate action key.

| Icon | Description |
|---|---|
| ? | Opens Help and Support, which provides tutorials, information about the Windows operating system and your computer, answers to questions, and updates to your computer.<br><br>Help and Support also provides automated troubleshooting tools and access to support. |
| | Decreases the screen brightness incrementally as long as you hold down the key. |
| | Increases the screen brightness incrementally as long as you hold down the key. |
| | Switches the screen image between display devices connected to the system. For example, if a monitor is connected to the computer, repeatedly pressing this key alternates the screen image from the computer display to the monitor display to a simultaneous display on both the computer and the monitor. |
| | Turns the radiance backlight keyboard (also known as keyboard backlight) feature off or on.<br><br>NOTE: To conserve battery power, turn off this feature. |

| Icon | Description |
|---|---|
| ⏮ | Plays the previous track of an audio CD or the previous section of a DVD or a BD. |
| ⏯ | Begins, pauses, or resumes playback of an audio CD, a DVD, or a BD. |
| ⏭ | Plays the next track of an audio CD or the next section of a DVD or a BD. |
| ■ | Stops audio or video playback of a CD, a DVD, or a BD. |
| 🔉− | Decreases speaker volume incrementally while you hold down the key. |
| 🔉+ | Increases speaker volume incrementally while you hold down the key. |
| 🔇 | Mutes or restores speaker sound. |
| (( )) | Turns the wireless feature on or off.<br>NOTE: A wireless network must be set up before a wireless connection is possible. |
| ✈ | Turns the airplane mode and wireless feature on or off.<br>NOTE: The airplane mode key is also referred to as the wireless button.<br>NOTE: A wireless network must be set up before a wireless connection is possible. |

# Labels

The labels affixed to the computer provide information you may need when you troubleshoot system problems or travel internationally with the computer.

IMPORTANT: Check the following locations for the labels described in this section: the bottom of the computer, inside the battery bay, under the removable service door, or on the back of the display.

- Service label—Provides important information to identify your computer. When contacting support, you will probably be asked for the serial number, and possibly for the product number or the model number. Locate these numbers before you contact support.

  Your service label will resemble one of the examples shown below. Refer to the illustration that most closely matches the service label on your computer.

| Component | |
|---|---|
| (1) | Serial number |
| (2) | Product number |
| (3) | Warranty period |
| (4) | Model number (select models only) |

- Microsoft® Certificate of Authenticity label (select models only prior to Windows 8)—Contains the Windows Product Key. You may need the Product Key to update or troubleshoot the operating system. HP platforms with Windows 8 or Windows 8.x preinstalled do not have the physical label. Instead a Digital Product Key is electronically installed.

  NOTE: The Digital Product Key is automatically recognized and activated by Microsoft operating systems when a Windows 8 or Windows 8.x operating system is reinstalled using HP-approved recovery methods.

- Regulatory label(s)—Provide(s) regulatory information about the computer.
- Wireless certification label(s)—Provide(s) information about optional wireless devices and the approval markings for the countries or regions in which the devices have been approved for use.

# 3 Connecting to a network

Your computer can travel with you wherever you go. But even at home, you can explore the globe and access information from millions of websites using your computer and a wired or wireless network connection. This chapter will help you get connected to that world.

## Connecting to a wireless network

Your computer may be equipped with one or more of the following wireless devices:

- WLAN device—Connects the computer to wireless local area networks (commonly referred to as Wi-Fi networks, wireless LANs, or WLANs) in corporate offices, your home, and public places such as airports, restaurants, coffee shops, hotels, and universities. In a WLAN, the mobile wireless device in your computer communicates with a wireless router or a wireless access point.
- HP Mobile Broadband Module—Gives you wireless connectivity over a wireless wide area network (WWAN), a much larger area. Mobile network operators install base stations (similar to cell phone towers) throughout large geographic areas, effectively providing coverage across entire states, regions, or even countries.
- Bluetooth device—Creates a personal area network (PAN) to connect to other Bluetooth-enabled devices such as computers, phones, printers, headsets, speakers, and cameras. In a PAN, each device communicates directly with other devices, and devices must be relatively close together—typically within 10 meters (approximately 33 feet) of each other.

For more information about wireless technology, the Internet, and networking, see the information and website links provided in Help and Support.

▲ From the Start screen, type `help`, and then select **Help and Support**.

– or –

From the Windows desktop, click the question mark icon in the notification area, at the far right of the taskbar.

### Using the wireless controls

You can control the wireless devices in your computer using one or more of these features:

- Wireless button or wireless key (also called the airplane mode key) (referred to in this chapter as the wireless button)
- Operating system controls

#### Wireless button

The computer has a wireless button, one or more wireless devices, and, on select models, one or two wireless lights. All the wireless devices on your computer are enabled at the factory. If your computer has a wireless light, the wireless light is on (white) when your computer is on.

The wireless light indicates the overall power state of your wireless devices, not the status of individual devices. If the wireless light is white, at least one wireless device is on. If the wireless light is off, all wireless devices are off.

NOTE: On some models, the wireless light is amber when all wireless devices are off.

Because the wireless devices are enabled at the factory, you can use the wireless button to turn on or turn off all the wireless devices simultaneously.

### Operating system controls

The Network and Sharing Center allows you to set up a connection or network, connect to a network, and diagnose and repair network problems.

To use operating system controls:

1. From the Start screen, type `control panel`, and then select **Control Panel**.

   – or –

   From the Windows desktop, right-click the **Start** button, and then select **Control Panel**.

2. Select **Network and Internet**, and then select **Network and Sharing Center**.

For more information, see the information provided in Help and Support.

▲ From the Start screen, type `help`, and then select **Help and Support**.

– or –

From the Windows desktop, click the question mark icon in the notification area, at the far right of the taskbar.

## Connecting to a WLAN

To connect to a WLAN, follow these steps:

1. Be sure that the WLAN device is on. On select models, if the device is on, the wireless light is white. If the wireless light is off, press the wireless button.

   NOTE: On some models, the wireless light is amber when all wireless devices are off.

2. From the Start screen or the Windows desktop, point to the upper-right or lower-right corner of the display to reveal the charms.
3. Select **Settings**, and then click the network status icon.
4. Select your WLAN from the list.
5. Click **Connect**.

   If the WLAN is a security-enabled WLAN, you are prompted to enter a security code. Type the code, and then click **Next** to complete the connection.

   NOTE: If no WLANs are listed, you may be out of range of a wireless router or access point.

   NOTE: If you do not see the WLAN you want to connect to, from the Windows desktop, right-click the network status icon, and then select **Open Network and Sharing Center**. Click **Set up a new connection or network**. A list of options is displayed, allowing you to manually search for and connect to a network or to create a new network connection.

6. Follow the on-screen instructions to complete the connection.

After the connection is made, place the mouse pointer over the network status icon in the notification area, at the far right of the taskbar, to verify the name and status of the connection.

NOTE: The functional range (how far your wireless signals travel) depends on WLAN implementation, router manufacturer, and interference from other electronic devices or structural barriers such as walls and floors.

## Using HP Mobile Broadband (select models only)

HP Mobile Broadband enables your computer to use WWANs to access the Internet from more places and over larger areas than it can by using WLANs. Using HP Mobile Broadband requires a network service provider (called a *mobile network operator*), which in most cases is a cellular phone network operator. Coverage for HP Mobile Broadband is similar to cellular phone voice coverage.

When used with a mobile network operator service, HP Mobile Broadband gives you the freedom to stay connected to the Internet, send email, or connect to your corporate network whether you are on the road or outside the range of Wi-Fi hotspots.

You might need the HP Mobile Broadband Module IMEI and/or MEID number to activate mobile broadband service.The serial number is printed on a label located on the bottom of your computer.

Some mobile network operators require the use of a subscriber identity module (SIM). A SIM contains basic information about you, such as a personal identification number (PIN), as well as network information. Some computers include a SIM that is preinstalled in the battery bay. If the SIM is not preinstalled, it may be included with the HP Mobile Broadband documents provided with your computer, or the mobile network operator may provide it separately from the computer.

For information about HP Mobile Broadband and how to activate service with a preferred mobile network operator, see the HP Mobile Broadband documents included with your computer.

## Using Bluetooth wireless devices (select models only)

A Bluetooth device provides short-range wireless communications that replace the physical cable connections that traditionally link electronic devices such as the following:

- Computers (desktop, notebook)
- Phones (cellular, cordless, smartphone)
- Imaging devices (printer, camera)
- Audio devices (headset, speakers)
- Mouse
- External keyboard

Bluetooth devices provide peer-to-peer capability that allows you to set up a PAN of Bluetooth devices. For information about configuring and using Bluetooth devices, see the Bluetooth software Help.

# Connecting to a wired network—LAN (select models only)

Use a LAN connection if you want to connect the computer directly to a router in your home (instead of working wirelessly), or if you want to connect to an existing network at your office.

Connecting to a LAN requires an 8-pin, RJ-45 (network) cable and a network jack on the computer.

To connect the network cable, follow these steps:

1. Plug the network cable into the network jack **(1)** on the computer.

2. Plug the other end of the network cable into a network wall jack **(2)** or router.

NOTE: If the network cable contains noise suppression circuitry **(3)**, which prevents interference from TV and radio reception, orient the circuitry end of the cable toward the computer.

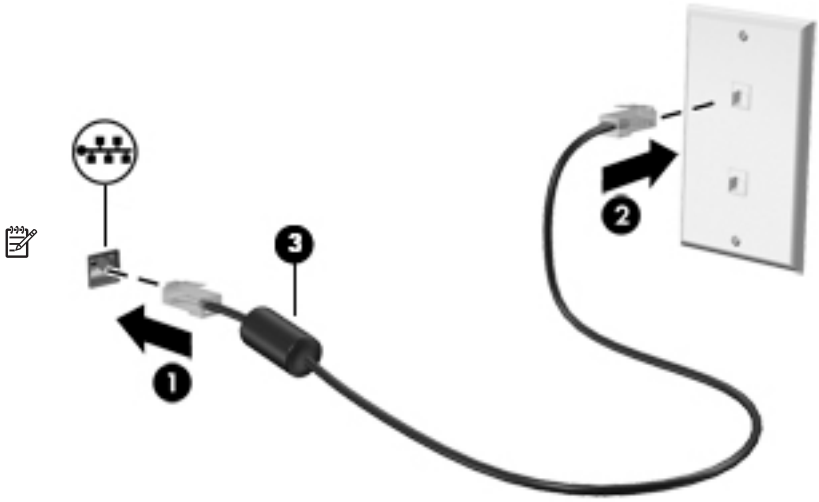

# Sharing data and drives and accessing software

When your computer is part of a network, you are not limited to using only the information that is stored in your computer. Computers connected to the network can exchange software and data with each other.

For more information about sharing files, folders, or drives, see the information provided in Help and Support.

▲ From the Start screen, type `help`, and then select **Help and Support**.

– or –

From the Windows desktop, click the question mark icon in the notification area, at the far right of the taskbar.

NOTE: When a disc like a DVD movie or game is copy-protected, it cannot be shared.

# Sharing media and data across your home group network (select models only)

Use sMedio 360 software (select models only) to share media and data between the devices on your home group network. Before you can use sMedio 360, all of your computers and mobile devices must be on the same home group network and media sharing must be enabled.

NOTE: For details on how to enable media sharing on additional devices, refer to the device manufacturer's instructions.

1. To set up a home group network:

   ▲ From the Start screen, click the **sMedio 360** app, and then click **Tutorial**.

2. To enable media sharing on your computer:

a. From the Start screen or the Windows desktop, point to the upper-right or lower-right corner of the display to reveal the charms.

b. Select **Settings**, and then click the network status icon.

c. Right-click the network you are connected to, and then select the check box to turn on sharing.

# 4 Enjoying entertainment features

Use your HP computer as an entertainment hub to socialize via the webcam, enjoy and manage your music, and download and watch movies. Or, to make your computer an even more powerful entertainment center, connect external devices like a monitor, projector, or TV, or speakers and headphones.

## Using a webcam (select models only)

The computer has an integrated webcam that records video and captures photographs. Some models may allow you to video conference and chat online using streaming video.

▲ To start the webcam, from the Start screen, type `camera`, and then select **Camera** from the list of applications.

For details about using the webcam, go to Help and Support.

▲ From the Start screen, type `help`, and then select **Help and Support**.

– or –

From the Windows desktop, click the question mark icon in the notification area, at the far right of the taskbar.

## Using audio

On your computer, or on select models using an external optical drive, you can play music CDs, download and listen to music, stream audio content from the web (including radio), record audio, or mix audio and video to create multimedia. To enhance your listening enjoyment, attach external audio devices such as speakers or headphones.

### Connecting speakers

You can attach wired speakers to your computer by connecting them to a USB port or to the audio-out (headphone) jack on your computer or on a docking station.

To connect wireless speakers to your computer, follow the device manufacturer's instructions. To connect high-definition speakers to the computer, see Setting up HDMI audio on page 22. Before connecting speakers, lower the volume setting.

### Connecting headphones

⚠ **WARNING!** To reduce the risk of personal injury, lower the volume setting before putting on headphones, earbuds, or a headset. For additional safety information, see the *Regulatory, Safety and Environmental Notices*. To access this document, from the Start screen, type `support`, and then select the **HP Support Assistant** app.

You can connect wired headphones to the headphone jack or to the audio-out (headphone)/audio-in (microphone) combo jack on your computer.

To connect wireless headphones to your computer, follow the device manufacturer's instructions.

## Connecting a microphone

To record audio, connect a microphone to the microphone jack on the computer. For best results when recording, speak directly into the microphone and record sound in a setting free of background noise.

## Connecting headsets

⚠ **WARNING!** To reduce the risk of personal injury, lower the volume setting before putting on headphones, earbuds, or a headset. For additional safety information, see the *Regulatory, Safety and Environmental Notices*. To access this document, from the Start screen, type `support`, and then select the **HP Support Assistant** app.

Headphones combined with a microphone are called *headsets*. You can connect wired headsets to the audio-out (headphone)/audio-in (microphone) jack on your computer.

To connect *wireless* headsets to your computer, follow the device manufacturer's instructions.

## Using Beats Audio (select models only)

Beats Audio is an enhanced audio feature that provides a deep, controlled bass while maintaining a clear sound. You can experience Beats Audio through the computer's internal speakers, through external speakers connected to a USB port, or through Beats Audio headphones connected to the headphone jack.

### Accessing Beats Audio Control Panel

Use Beats Audio Control Panel to view and manually control audio and bass settings.

1. From the Start screen, type `control panel`, select **Control Panel**, select **Hardware and Sound**, and then select **Beats Audio Control Panel**.

   – or –

   From the Windows desktop, right-click the **Start** button, and then select **Control Panel**.

2. Select **Hardware and Sound**, and then select **Beats Audio Control Panel**.

### Enabling and disabling Beats Audio

▲ To enable or disable Beats Audio, press the fn key in combination with the b key.

# Using video

Your computer is a powerful video device that enables you to watch streaming video from your favorite websites and download video and movies to watch on your computer when you are not connected to a network.

To enhance your viewing enjoyment, use one of the video ports on the computer to connect an external monitor, projector, or TV.

**IMPORTANT:** Be sure that the external device is connected to the correct port on the computer, using the correct cable. Follow the device manufacturer's instructions.

For information on using your video features, refer to Help and Support.

## Connecting video devices by using a VGA cable (select models only)

NOTE: To connect a VGA video device to your computer, you need an VGA cable, purchased separately.

To see the computer screen image on an external VGA monitor or projected for a presentation, connect a monitor or projector to the computer's VGA port.

1. Connect the VGA cable from the monitor or projector to the VGA port on the computer as shown.

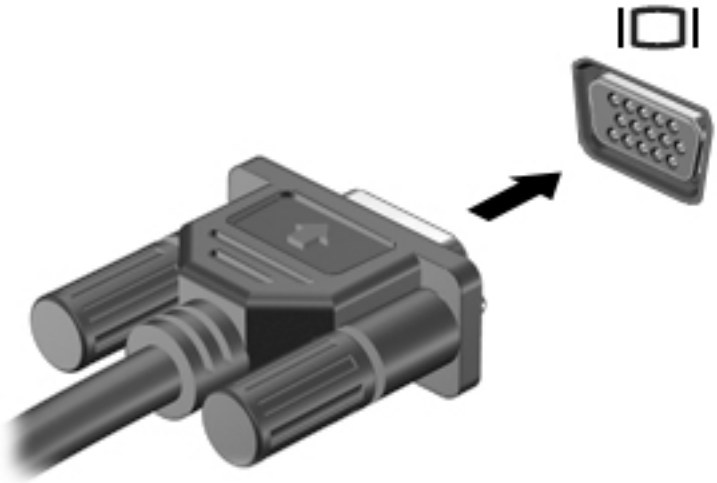

2. Press f4 to alternate the screen image between 4 display states:
   - **PC Screen only:** View the screen image on the computer only.
   - **Duplicate:** View the screen image simultaneously on both the computer and the external device.
   - **Extend:** View the screen image extended across the computer and the external device.
   - **Second screen only:** View the screen image on the external device only.

   Each time you press f4, the display state changes.

   NOTE: For best results, especially if you choose the "Extend" option, increase the screen resolution of the external device, as follows. From the Start screen, type `control panel`, and then select **Control Panel**. Select **Appearance and Personalization**. Under **Display**, select **Adjust screen resolution**.

## Connecting video devices using an HDMI cable (select models only)

NOTE: To connect an HDMI device to your computer, you need an HDMI cable, purchased separately.

To see the computer screen image on a high-definition TV or monitor, connect the high-definition device according to the following instructions:

1. Connect one end of the HDMI cable to the HDMI port on the computer.

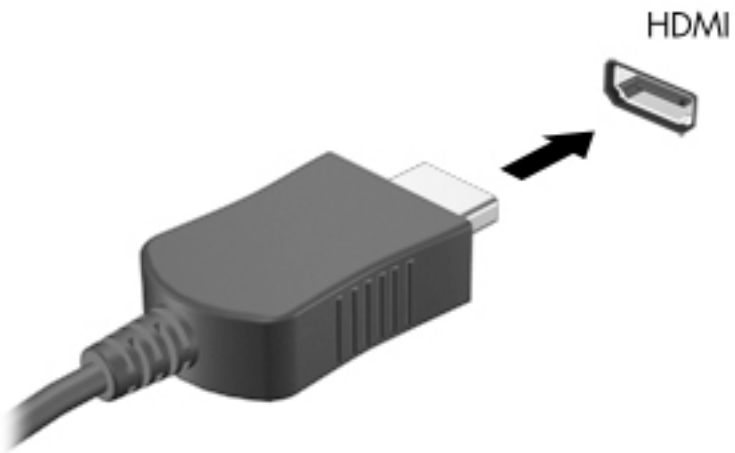


2. Connect the other end of the cable to the high-definition TV or monitor.
3. Press f4 to alternate the computer screen image between 4 display states:
   - **PC screen only:** View the screen image on the computer only.
   - **Duplicate:** View the screen image simultaneously on both the computer and the external device.
   - **Extend:** View the screen image extended across the computer and the external device.
   - **Second screen only:** View the screen image on the external device only.

   Each time you press f4, the display state changes.

   NOTE: For best results, especially if you choose the "Extend" option, increase the screen resolution of the external device, as follows. From the Start screen, type `control panel`, and then select **Control Panel**. Select **Appearance and Personalization**. Under **Display**, select **Adjust screen resolution**.

## Setting up HDMI audio

HDMI is the only video interface that supports high-definition video and audio. After you connect an HDMI TV to the computer, you can then turn on HDMI audio by following these steps:

1. From the Windows desktop, right-click the **Speakers** icon in the notification area, at the far right of the taskbar, and then select **Playback devices**.
2. On the **Playback** tab, select the name of the digital output device.
3. Click **Set Default**, and then click **OK**.

To return the audio stream to the computer speakers:

1. From the Windows desktop, right-click the **Speakers** icon in the notification area, at the far right of the taskbar, and then click **Playback devices**.
2. On the Playback tab, click **Speakers**.
3. Click **Set Default**, and then click **OK**.

## Connecting digital display devices using a DisplayPort cable (select models only)

NOTE: To connect a digital display device to your computer, you need a DisplayPort (DP-DP) cable, purchased separately.

The DisplayPort connects a digital display device such as a high-performance monitor or projector. The DisplayPort delivers higher performance than the VGA external monitor port and improves digital connectivity.

1. Connect one end of the DisplayPort cable to the DisplayPort on the computer.

2. Connect the other end of the cable to the digital display device.
3. Press f4 to alternate the computer screen image between 4 display states:
   - **PC screen only:** View the screen image on the computer only.
   - **Duplicate:** View the same screen image simultaneously on both the computer and the external device.
   - **Extend:** View the screen image extended across the computer and the external device.
   - **Second screen only:** View the screen image on the external device only.

   Each time you press f4, the display state changes.

   NOTE: For best results, especially if you choose the "Extend" option, increase the screen resolution of the external device, as follows. From the Start screen, type `control panel`, and then select **Control Panel**. Select **Appearance and Personalization**. Under **Display**, select **Adjust screen resolution**.

## Connecting Miracast-compatible wireless displays (select models only)

To discover and connect to Miracast-compatible wireless displays, follow the steps below.

To open Miracast:

▲ Point to the upper-right or lower-right corner of the Start screen or the Windows desktop to display the charms, click **Devices**, click **Project**, and then follow the on-screen instructions.

– or –

On select computer models, from the Start screen, click the **HP Quick Access to Miracast** icon, and then follow the on-screen instructions.

# 5 Navigating the screen

To quickly return to the Start screen, press the Windows key on a keyboard or the Windows button on a tablet.

You can navigate the computer screen in the following ways:

- Touch gestures
- Keyboard and optional mouse (purchased separately)

NOTE: An external USB mouse (purchased separately) can be connected to a USB ports on the computer.

## Using the TouchPad and touch screen gestures

The TouchPad helps you navigate the computer screen and control the pointer using simple touch gestures. To navigate the touchscreen, you can use the left and right TouchPad buttons as you would use the corresponding buttons on an external mouse. You can also customize gestures and view demonstrations of how they work.

From the Start screen, type `control panel`, select **Control Panel**, and then select **Hardware and Sound**. Under **Devices and Printers**, select **Mouse**.

NOTE: Most of the gestures shown here can be used on either the TouchPad or touchscreen. TouchPad gestures are not supported in all apps.

### Tap

Use the tap/double-tap gesture to select or open an item on the screen.

- Point to an item on the screen, and then tap one finger on the TouchPad zone select it. Double-tap an item to open it.

### Two-finger scroll

Use the two-finger scroll gesture to move up, down, or sideways on a page or image.

- Place two fingers slightly apart on the TouchPad zone and then drag them up, down, left, or right.

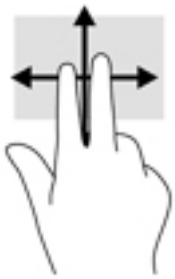

## Two-finger pinch zoom

Use the two-finger pinch zoom to zoom out or in on images or text.

- Zoom out by placing two fingers apart on the TouchPad zone and then moving your fingers together.
- Zoom in by placing two fingers together on the TouchPad zone and then moving your fingers apart.

## Two-finger click

Use the two-finger click gesture to open the menu for an object on the screen.

NOTE: The two-finger click performs the same function as right-clicking with the mouse.

- Place two fingers on the TouchPad zone and press down to open the options menu for the selected object.

## Right-edge swipe

Use the right-edge swipe to reveal the charms, which let you search, share, start apps, access devices, or change settings.

- Gently swipe your finger inward from the right edge of the TouchPad to reveal the charms.

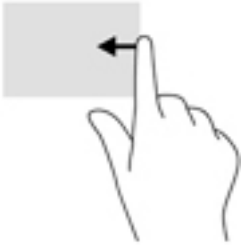

## Left-edge swipe

Use the left-edge swipe to reveal your open apps so that you can access them quickly.

- Gently swipe your finger inward from the left edge of the TouchPad to switch between apps. Without lifting your finger, swipe back toward the left edge to reveal all open apps.

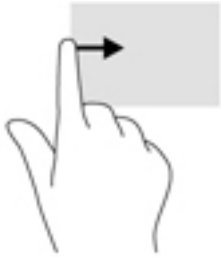

## Top-edge swipe and bottom-edge swipe

Use the top-edge swipe or bottom-edge swipe to display command options that allow you to customize an open app.

**IMPORTANT:** When an app is open, the top-edge swipe varies depending on the app.

- Gently swipe your finger from the top edge or the bottom edge to reveal the app command options.

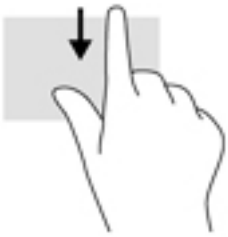

## One-finger slide (touch screen only)

Use the one-finger slide to pan or scroll through lists and pages, or to move an object.

- To scroll across the screen, lightly slide one finger across the screen in the direction you want to move.
- To drag, press and hold an object, and then drag the object to move it.

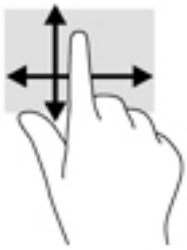

## Using a keyboard and optional mouse

A keyboard and optional external mouse allow you to type, select items, scroll, and perform similar functions as you do touch gestures. For details, refer to Getting to know your computer on page 4.

**TIP:** The Windows key on a keyboard or the Windows button on a tablet allow you to quickly return to the Start screen from an open app or the Windows desktop. Press the button or key again to return to the previous screen.

# 6 Managing power

Your computer can operate on either battery power or external power. When the computer is running on battery power only and an AC power source is not available to charge the battery, it is important to monitor and conserve the battery charge.

## Initiating and exiting Sleep and Hibernation

Windows has two power-saving states, Sleep and Hibernation.

- Sleep—The Sleep state is automatically initiated after a period of inactivity. Your work is saved to memory, allowing you to resume your work very quickly. You can also initiate Sleep manually. For more information, see Manually initiating and exiting Sleep on page 30.
- Hibernation—The Hibernation state is automatically initiated if the battery reaches a critical level. In the Hibernation state, your work is saved to a hibernation file and the computer powers down. You can also initiate Hibernation manually. For more information, see Manually initiating and exiting Hibernation (select models only) on page 30.

**CAUTION:** To reduce the risk of possible audio and video degradation, loss of audio or video playback functionality, or loss of information, do not initiate the Sleep state while reading from or writing to a disc or an external media card.

**NOTE:** You cannot initiate any type of networking connection or perform any computer functions while the computer is in the Sleep state or in the Hibernation state.

## Manually initiating and exiting Sleep

You can initiate Sleep in any of the following ways:

- Close the display.
- From the Start screen or the Windows desktop, point to the upper-right or lower-right corner of the screen to reveal the charms. Click **Settings**, click the **Power** icon, and then click **Sleep**.

You can exit Sleep in any of the following ways:

- Briefly press the power button.
- If the computer is closed, raise the display.
- Press a key on the keyboard.
- Tap or swipe the TouchPad.

When the computer exits Sleep, the power lights turn on and your work returns to the screen.

NOTE: If you have set a password to be required on exiting Sleep, you must enter your Windows password before your work returns to the screen.

## Manually initiating and exiting Hibernation (select models only)

You can enable user-initiated Hibernation and change other power settings and timeouts using Power Options.

1. From the Start screen, type `power options`, and then select **Power options**.

   – or –

   From the Windows desktop, right-click the **Start** button, and then click **Power Options**.
2. In the left pane, click **Choose what the power button does**.
3. Click **Change Settings that are currently unavailable**.
4. In the **When I press the power button** area, select **Hibernate**.
5. Click **Save changes**.

To exit Hibernation:

▲ Briefly press the power button.

When the computer exits Hibernation, the power lights turn on and your work returns to the screen.

NOTE: If you have set a password to be required on exiting Hibernation, you must enter your Windows password before your work returns to the screen.

## Setting password protection on wakeup (exiting Sleep or Hibernation)

To set the computer to prompt for a password when the computer exits Sleep or Hibernation, follow these steps:

1. From the Start screen, type `power options`, and then select **Power options**.

   – or –

   From the Windows desktop, right-click the **Start** button, and then click **Power Options**.
2. In the left pane, click **Require a password on wakeup**.

3. Click **Change Settings that are currently unavailable**.
4. Click **Require a password (recommended)**.

   NOTE: If you need to create a user account password or change your current user account password, click **Create or change your user account password**, and then follow the on-screen instructions. If you do not need to create or change a user account password, go to step 5.

5. Click **Save changes**.

# Using the power meter and power settings

The power meter is located on the Windows desktop. The power meter allows you to quickly access power settings and view the remaining battery charge.

- To view the percentage of remaining battery charge and the current power plan, place the mouse pointer over the power meter icon.
- To use Power Options, click the power meter icon and select an item from the list. From the Start screen, you can also type `power options`, and then select **Power Options**.

Different power meter icons indicate whether the computer is running on battery or external power. Placing the mouse pointer over the icon reveals a message if the battery has reached a low or critical battery level.

# Running on battery power

When a charged battery is in the computer and the computer is not plugged into external power, the computer runs on battery power. When the computer is off and unplugged from external power, the battery in the computer slowly discharges. The computer will display a message when the battery reaches a low or critical battery level.

Computer battery life varies, depending on power management settings, programs running on the computer, screen brightness, external devices connected to the computer, and other factors.

## Factory-sealed battery (select products only)

To monitor the status of the battery, or if the battery is no longer holding a charge, run Battery Check in the HP Support Assistant app.

1. From the Start screen, type `support`, and then select the **HP Support Assistant** app.

   – or –

   From the Windows desktop, click the question mark icon in the notification area, at the far right of the taskbar.

2. Select **Battery and performance**. If Battery Check indicates that your battery should be replaced, contact support.

The battery(ies) in this product cannot be easily replaced by users themselves. Removing or replacing the battery could affect your warranty coverage. If a battery is no longer holding a charge, contact support.

The battery[ies] in this product cannot be easily replaced by user themselves. Removing or replacing the battery could affect your warranty coverage. If a battery is no longer holding a charge, contact support. When a battery has reached the end of its useful life, do not dispose of the battery in general household waste. Follow the local laws and regulations in your area for battery disposal.

## User-replaceable battery (select models only)

**WARNING!** To reduce potential safety issues, use only the user-replaceable battery provided with the computer, a replacement battery provided by HP, or a compatible battery purchased from HP.

**CAUTION:** Removing a user-replaceable battery that is the sole power source for the computer can cause loss of information. To prevent loss of information, save your work or shut down the computer through Windows before removing the battery.

To remove the user-replaceable battery (select models only), refer to the steps and illustration that most closely match your computer:

1. Turn the computer upside down on a flat surface.
2. Slide the battery release latch **(1)** to release the battery.

   **NOTE:** The battery release latch automatically returns to its original position.

3. Remove the battery from the computer **(2)**.

– or –

1. Turn the computer upside down on a flat surface.
2. Slide the battery release latch **(1)** to release the battery.

   **NOTE:** The battery release latch automatically returns to its original position.

3. Pivot the battery upward **(2)**, and then remove it from the computer **(3)**.

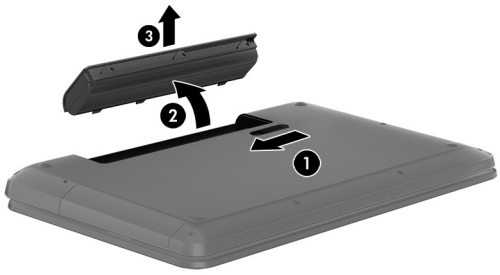

## Finding battery information

To access battery information:

1. From the Start screen, type `support`, and then select the **HP Support Assistant** app.

   – or –

   From the Windows desktop, click the question mark icon in the notification area, at the far right of the taskbar.

2. Select **Battery and Performance**.

HP Support Assistant provides the following tools and information about the battery:

- Battery Check
- Information about battery types, specifications, life cycles, and capacity

## Conserving battery power

To conserve battery power and maximize battery life:

- Lower the brightness of the display.
- Select the **Power saver** setting in Power Options.
- If the computer will be unused and unplugged from external power for more than 2 weeks, remove the user-replaceable battery from the computer and store it separately in a cool, dry place.
- Turn off wireless devices when you are not using them.
- Disconnect unused external devices that are not plugged into an external power source, such as an external hard drive connected to a USB port.
- Stop, disable, or remove any external media cards that you are not using.
- Before you leave your work, initiate Sleep or shut down the computer.

## Resolving a low battery level

### Resolving a low battery level when external power is available

Connect one of the following to the computer and to external power:

- AC adapter
- Optional docking or expansion device
- Optional power adapter purchased as an accessory from HP

### Resolving a low battery level when no power source is available

Save your work and shut down the computer.

### Resolving a low battery level when the computer cannot exit Hibernation

1. Replace the discharged user-replaceable battery with a charged battery, or connect the AC adapter to the computer and to external power.
2. Exit Hibernation by pressing the power button.

## Storing a user-replaceable battery (select models only)

⚠ CAUTION: To reduce the risk of damage to a battery, do not expose it to high temperatures for extended periods of time.

If a computer will be unused and unplugged from external power for more than 2 weeks, remove the battery and store it separately in a cool, dry place to prolong the battery charge.

A stored battery should be checked every 6 months. If the capacity is less than 50 percent, recharge the battery before returning it to storage.

## Disposing of a user-replaceable battery (select models only)

⚠ **WARNING!** To reduce the risk of fire or burns, do not disassemble, crush, or puncture; do not short external contacts; do not dispose of in fire or water.

See the *Regulatory, Safety and Environmental Notices* for proper battery disposal.

To access this document:

▲ From the Start screen, type `support`, and then select the **HP Support Assistant** app.

– or –

From the Windows desktop, click the question mark icon in the notification area, at the far right of the taskbar.

# Running on AC power

For information about connecting to AC power, refer to the *Setup Instructions* poster provided in the computer box.

The computer does not use battery power when the computer is connected to AC power with an approved AC adapter or an optional docking/expansion device.

⚠ **WARNING!** To reduce potential safety issues, use only the AC adapter provided with the computer, a replacement AC adapter provided by HP, or a compatible AC adapter purchased from HP.

Connect the computer to AC power under any of the following conditions:

⚠ **WARNING!** Do not charge the computer battery while you are aboard aircraft.

- When charging or calibrating a battery
- When installing or modifying system software
- When writing information to a disc (select models only)
- When running Disk Defragmenter on computers with internal hard drives
- When performing a backup or recovery

When you connect the computer to AC power:

- The battery begins to charge.
- The screen brightness increases.
- The power meter icon on the Windows desktop changes appearance.

When you disconnect AC power:

- The computer switches to battery power.
- The screen brightness automatically decreases to save battery life.
- The power meter icon on the Windows desktop changes appearance.

## Troubleshooting power problems

Test the AC adapter if the computer exhibits any of the following symptoms when it is connected to AC power:

- The computer does not turn on.
- The display does not turn on.
- The power lights do not turn on.

To test the AC adapter:

1. Shut down the computer.
2. Connect the AC adapter to the computer, and then plug it into an AC outlet.
3. Turn on the computer.
   - If the power lights turn *on*, the AC adapter is working properly.
   - If the power lights remain *off*, check the connection from the AC adapter to the computer and the connection from the AC adapter to the AC outlet to be sure that the connections are secure.
   - If the connections are secure and the power lights remain *off*, the AC adapter is not functioning and should be replaced.

Contact support for information about obtaining a replacement AC power adapter.

# Shutting down (turning off) the computer

CAUTION: Unsaved information is lost when the computer shuts down. Be sure to save your work before shutting down the computer.

The Shut down command closes all open programs, including the operating system, and then turns off the display and computer.

Shut down the computer under any of the following conditions:

- When you are connecting an external hardware device that does not connect to a USB or video port
- When the computer will be unused and disconnected from external power for an extended period

Although you can turn off the computer with the power button, the recommended procedure is to use the Windows Shut down command.

NOTE: If the computer is in the Sleep state or in Hibernation, first exit Sleep or Hibernation by briefly pressing the power button.

1. Save your work and close all open programs.
2. From the Start screen or the Windows desktop, point to the upper-right or lower-right corner of the screen to reveal the charms.
3. Click **Settings**, click the **Power** icon, and then click **Shut down**.

   – or –

Right-click the **Start** button in the lower-left corner of the screen, select **Shut down or sign out**, and then select **Shut down**.

If the computer is unresponsive and you are unable to use the preceding shutdown procedures, try the following emergency procedures in the sequence provided:

- Press ctrl+alt+delete, click the **Power** icon, and then select **Shut Down**.
- Press and hold the power button for at least 5 seconds.
- Disconnect the computer from external power.
- On models with a user-replaceable battery, remove the battery.

# 7 Maintaining your computer

It is important to perform regular maintenance to keep your computer in optimal condition. This chapter explains how to use tools like Disk Defragmenter and Disk Cleanup. It also provides instructions for updating programs and drivers, steps to clean the computer, and tips for traveling with (or shipping) the computer.

## Improving performance

You can improve the performance of your computer by performing regular maintenance tasks with tools such as Disk Defragmenter and Disk Cleanup.

### Using Disk Defragmenter

HP recommends using Disk Defragmenter to defragment your hard drive at least once a month.

NOTE: It is not necessary to run Disk Defragmenter on solid-state drives.

To run Disk Defragmenter:

1. Connect the computer to AC power.
2. From the Start screen, type `defragment`, and then select **Defragment and optimize your drives**.
3. Follow the on-screen instructions.

For additional information, access the Disk Defragmenter software Help.

### Using Disk Cleanup

Use Disk Cleanup to search the hard drive for unnecessary files that you can safely delete to free up disk space and help the computer run more efficiently.

To run Disk Cleanup:

1. From the Start screen, type `disk`, and then select one of the following:
   - **Free up disk space on this PC**
   - **Uninstall apps to free up disk space**
   - **Free up disk space by deleting uncessary files**
2. Follow the on-screen instructions.

## Updating programs and drivers

HP recommends that you update your programs and drivers on a regular basis. Updates can resolve issues and bring new features and options to your computer. For example, older graphics components might not work well with the most recent gaming software. Without the latest driver, you would not be getting the most out of your equipment.

Go to http://www.hp.com/support to download the latest versions of HP programs and drivers. In addition, register to receive automatic notifications when updates become available.

If you would like to update your programs and drivers, follow these instructions:

1. From the Start screen, type `support`, and then select the **HP Support Assistant** app.

   -or-

   From the Windows desktop, click the question mark icon in the notification area, at the far right of the taskbar.

2. Click **Updates and tune-ups**, and then click **Check for HP updates now**.
3. Follow the on-screen instructions.

# Cleaning your computer

Use the following products to safely clean your computer:

- Dimethyl benzyl ammonium chloride 0.3 percent maximum concentration (for example, disposable wipes, which come in a variety of brands)
- Alcohol-free glass-cleaning fluid
- Solution of water and mild soap
- Dry microfiber cleaning cloth or a chamois (static-free cloth without oil)
- Static-free cloth wipes

⚠ CAUTION: Avoid strong cleaning solvents that can permanently damage your computer. If you are not sure that a cleaning product is safe for your computer, check the product contents to make sure that ingredients such as alcohol, acetone, ammonium chloride, methylene chloride, and hydrocarbons are not included in the product.

Fibrous materials, such as paper towels, can scratch the computer. Over time, dirt particles and cleaning agents can get trapped in the scratches.

## Cleaning procedures

Follow the procedures in this section to safely clean your computer.

⚠ WARNING! To prevent electric shock or damage to components, do not attempt to clean your computer while it is on.

1. Turn off the computer.
2. Disconnect AC power.
3. Disconnect all powered external devices.

⚠ CAUTION: To prevent damage to internal components, do not spray cleaning agents or liquids directly on any computer surface. Liquids dripped on the surface can permanently damage internal components.

### Cleaning the display

Gently wipe the display using a soft, lint-free cloth moistened with an alcohol-free glass cleaner. Be sure that a display is dry before you close the computer.

## Cleaning the sides or cover

To clean the sides or cover, use a soft microfiber cloth or chamois moistened with one of the cleaning solutions listed previously, or use an acceptable disposable wipe.

NOTE: When cleaning the cover of the computer, use a circular motion to aid in removing dirt and debris.

## Cleaning the TouchPad, keyboard, or mouse (select models only)

WARNING! To reduce the risk of electric shock or damage to internal components, do not use a vacuum cleaner attachment to clean the keyboard. A vacuum cleaner can deposit household debris on the keyboard surface.

CAUTION: To prevent damage to internal components, do not allow liquids to drip between the keys.

- To clean the TouchPad, keyboard, or mouse, use a soft microfiber cloth or a chamois moistened with one of the cleaning solutions listed previously or use an acceptable disposable wipe.
- To prevent keys from sticking and to remove dust, lint, and particles from the keyboard, use a can of compressed air with a straw extension.

# Traveling with or shipping your computer

If you have to travel with or ship your computer, follow these tips to keep your equipment safe.

- Prepare the computer for traveling or shipping:
  - Back up your information to an external drive.
  - Remove all discs and all external media cards, such as memory cards.
  - Turn off and then disconnect all external devices.
  - Shut down the computer.
- Take along a backup of your information. Keep the backup separate from the computer.
- When traveling by air, carry the computer as hand luggage; do not check it in with the rest of your luggage.

  CAUTION: Avoid exposing a drive to magnetic fields. Security devices with magnetic fields include airport walk-through devices and security wands. Airport conveyer belts and similar security devices that check carry-on baggage use X-rays instead of magnetism and do not damage drives.
- If you plan to use the computer during a flight, listen for the in-flight announcement that tells you when you are allowed to use your computer. In-flight computer use is at the discretion of the airline.
- If you are shipping the computer or a drive, use suitable protective packaging and label the package “FRAGILE.”
- The use of wireless devices may be restricted in some environments. Such restrictions may apply aboard aircraft, in hospitals, near explosives, and in hazardous locations. If you are uncertain of the policy that applies to the use of a wireless device in your computer, ask for authorization to use your computer before you turn it on.
- If you are traveling internationally, follow these suggestions:

- Check the computer-related customs regulations for each country or region on your itinerary.
- Check the power cord and adapter requirements for each location in which you plan to use the computer. Voltage, frequency, and plug configurations vary.

⚠ **WARNING!** To reduce the risk of electric shock, fire, or damage to the equipment, do not attempt to power the computer with a voltage converter kit sold for appliances.

# 8 Securing your computer and information

Computer security is essential for protecting the confidentiality, integrity, and availability of your information. Standard security solutions provided by the Windows operating system, HP applications, the non-Windows Setup Utility (BIOS), and other third-party software can help protect your computer from a variety of risks, such as viruses, worms, and other types of malicious code.

**IMPORTANT:** Some security features listed in this chapter may not be available on your computer.

## Using passwords

A password is a group of characters that you choose to secure your computer information and to protect online transactions. Several types of passwords can be set. For example, when you set up your computer for the first time, you were asked to create a user password to secure your computer. Additional passwords can be set in Windows or in the HP Setup Utility (BIOS) that is preinstalled on your computer.

You may find it helpful to use the same password for a Setup Utility (BIOS) feature and for a Windows security feature.

To create and save passwords, use the following tips:

- To reduce the risk of being locked out of the computer, record each password and store it in a secure place away from the computer. Do not store passwords in a file on the computer.
- When creating passwords, follow requirements set by the program.
- Change your passwords at least every 3 months.
- An ideal password is long and has letters, punctuation, symbols, and numbers.
- Before you send your computer for service, back up your files, delete confidential files, and then remove all password settings.

For additional information about Windows passwords, such as screen-saver passwords:

▲ From the Start screen, type `support`, and then select the **HP Support Assistant** app.

-or-

From the Windows desktop, click the question mark icon in the notification area, at the far right of the taskbar.

### Setting Windows passwords

| Password | Function |
|---|---|
| User password | Protects access to a Windows user account. |
| Administrator password | Protects administrator-level access to computer contents.<br>**NOTE:** This password cannot be used to access Setup Utility (BIOS) contents. |

## Setting Setup Utility (BIOS) passwords

| Password | Function |
|---|---|
| Administrator password | • Must be entered each time you access Setup Utility (BIOS).<br>• If you forget your administrator password, you cannot access Setup Utility (BIOS). |
| Power-on password | • Must be entered each time you turn on or restart the computer.<br>• If you forget your power-on password, you cannot turn on or restart the computer. |

To set, change, or delete an administrator or power-on password in Setup Utility (BIOS):

NOTE: If you have tablet with a detachable keyboard or keyboard dock, attach it before beginning these steps.

1. Start Setup Utility (BIOS):

   Turn on or restart the computer, quickly press esc, and then press f10.

2. Use the arrow keys to select **Security**, and then follow the on-screen instructions.

Your changes take effect when the computer restarts.

# Using the fingerprint reader (select models only)

Integrated fingerprint readers are available on select computer models.

NOTE: For the location of the fingerprint reader on your computer, see Identifying components on page 5.

To use the fingerprint reader, you must set up a user account and password on the computer and then register one or more fingerprints using HP SimplePass software.

To register fingerprints with HP SimplePass:

1. Swipe a finger on the fingerprint sensor to launch HP SimplePass.

   – or –

   From the Start screen, type `simple`, and then select **HP SimplePass**.

2. When the HP SimplePass welcome screen is revealed, click **Get Started**.
3. HP SimplePass prompts you to swipe your right index finger over the sensor.
4. Swipe your finger 3 times to finish the registration.

   If registration is successful, a green circle appears on the corresponding finger in the illustration.

5. Repeat steps 1 through 4 to register an additional fingerprint.

# Using Internet security software

When you use your computer to access email, a network, or the Internet, you potentially expose your computer to computer viruses, spyware, and other online threats. To help protect your computer,

Internet security software that includes antivirus and firewall features may be preinstalled on your computer as a trial offer. To provide ongoing protection against newly discovered viruses and other security risks, security software must be kept up to date. It is strongly recommended that you upgrade the security software trial offer or purchase the software of your choice in order to fully protect your computer.

## Using antivirus software

Computer viruses can disable programs, utilities, or the operating system, or cause them to function abnormally. Antivirus software can detect most viruses, destroy them, and in most cases, repair any damage they have caused.

To provide ongoing protection against newly discovered viruses, antivirus software must be kept up to date.

An antivirus program may be preinstalled on your computer. It is strongly recommended that you use the antivirus program of your choice in order to fully protect your computer.

For more information about computer viruses, from the Start screen, type `support`, and then select the **HP Support Assistant** app, or from the Windows desktop, click the question mark icon in the notification area, at the far right of the taskbar.

## Using firewall software

Firewalls are designed to prevent unauthorized access to a system or network. A firewall can be software you install on your computer and/or network, or it can be a combination of both hardware and software.

There are two types of firewalls to consider:

- Host-based firewalls—Software that protects only the computer it is installed on.
- Network-based firewalls—Installed between your DSL or cable modem and your home network to protect all the computers on the network.

When a firewall is installed on a system, all data sent to and from the system is monitored and compared with a set of user-defined security criteria. Any data that does not meet those criteria is blocked.

# Installing software updates

HP, Windows, and third-party software installed on your computer should be regularly updated to correct security problems and improve software performance. For more information, see Updating programs and drivers on page 37.

# Installing critical security updates

⚠ CAUTION: Microsoft sends out alerts regarding critical updates. To protect the computer from security breaches and computer viruses, install all critical updates from Microsoft as soon as you receive an alert.

You can install these updates manually or automatically.

To view or change the settings:

1. From the Start screen, type `control panel`.

   – or –

From the Windows desktop, right-click the **Start** button, and then select **Control Panel**.

2. Select **System and Security**, select **Windows Update**, select **Change settings**, and then follow the on-screen instructions.

# Securing your wireless network

When you set up a WLAN or access an existing WLAN, always enable security features to protect your network from unauthorized access. WLANs in public areas (hotspots) like coffee shops and airports may not provide any security.

# Backing up your software applications and information

Regularly back up your software applications and information to protect them from being permanently lost or damaged through a virus attack or a software or hardware failure. For more information, see Backing up, restoring, and recovering on page 49.

# Using an optional security cable lock

A security cable lock, purchased separately, is designed to act as a deterrent, but it may not prevent the computer from being mishandled or stolen. Security cable locks are only one of several methods that should be employed as part of a complete security solution to help maximize theft protection.

The security cable slot on your computer may look slightly different from the illustration in this section. For the location of the security cable slot on your computer, see Getting to know your computer on page 4.

1. Loop the security cable lock around a secured object.
2. Insert the key **(1)** into the security cable lock **(2)**.
3. Insert the security cable lock into the security cable slot on the computer **(3)**, and then lock the security cable lock with the key.

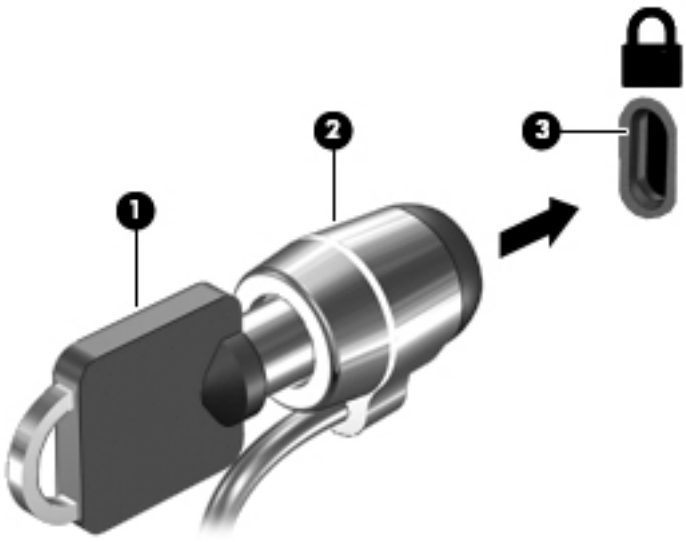


4. Remove the key and keep it in a safe place.

# 9 Using Setup Utility (BIOS)

Setup Utility, or Basic Input/Output System (BIOS), controls communication between all the input and output devices on the system (such as disk drives, display, keyboard, mouse, and printer). Setup Utility (BIOS) includes settings for the types of devices installed, the startup sequence of the computer, and the amount of system and extended memory.

## Starting Setup Utility (BIOS)

CAUTION: Use extreme care when making changes in Setup Utility (BIOS). Errors can prevent the computer from operating properly.

NOTE: If you have tablet with a detachable keyboard or keyboard dock, attach it before beginning these steps.

▲ Turn on or restart the computer, quickly press esc, and then press f10.

## Updating the BIOS

Updated versions of the BIOS may be available on the HP website.

Most BIOS updates on the HP website are packaged in compressed files called *SoftPaqs*.

Some download packages contain a file named Readme.txt, which contains information regarding installing and troubleshooting the file.

### Determining the BIOS version

To determine whether available BIOS updates contain later BIOS versions than the one currently installed on the computer, you need to know the version of the system BIOS that is installed.

BIOS version information (also known as *ROM date* and *System BIOS*) can be revealed by pressing fn+esc (if you are already in Windows) or by using Setup Utility (BIOS).

1. Start Setup Utility (BIOS) (see Starting Setup Utility (BIOS) on page 45).
2. Use the arrow keys to select **Main**, and then make note of your BIOS version.

To exit Setup Utility (BIOS):

1. Use the arrow keys to select **Exit**, select **Exit Discarding Changes**, and then press **enter**.
2. Select **Yes**.

## Downloading a BIOS update

**CAUTION:** To reduce the risk of damage to the computer or an unsuccessful installation, download and install a BIOS update only when the computer is connected to reliable external power using the AC adapter. Do not download or install a BIOS update while the computer is running on battery power, docked in an optional docking device, or connected to an optional power source. During the download and installation, follow these instructions:

- Do not disconnect power from the computer by unplugging the power cord from the AC outlet.
- Do not shut down the computer or initiate Sleep.
- Do not insert, remove, connect, or disconnect any device, cable, or cord.

**NOTE:** If your computer is connected to a network, consult the network administrator before installing any software updates, especially system BIOS updates.

1. From the Start screen, type `support`, and then select the **HP Support Assistant** app.

   – or –

   From the Windows desktop, click the question mark icon in the notification area, at the far right of the taskbar.
2. Click **Updates and tune-ups**, and then click **Check for HP updates now**.
3. Follow the on-screen instructions.
4. At the download area, follow these steps:
   a. Identify the most recent BIOS update and compare it to the BIOS version currently installed on your computer. If the update is more recent than your BIOS, make a note of the date, name, or other identifier. You may need this information to locate the update later, after it has been downloaded to your hard drive.
   b. Follow the on-screen instructions to download your selection to the hard drive.

      If the update is more recent than your BIOS, make a note of the path to the location on your hard drive where the BIOS update is downloaded. You will need to access this path when you are ready to install the update.

BIOS installation procedures vary. Follow any instructions that appear on the screen after the download is complete. If no instructions appear, follow these steps:

1. From the Start screen, type `file`, and then select **File Explorer**.

   – or –

   From the Windows desktop, right-click the **Start** button, and then select **File Explorer**.
2. Click your hard drive designation. The hard drive designation is typically Local Disk (C:).
3. Using the hard drive path you recorded earlier, open the folder on your hard drive that contains the update.
4. Double-click the file that has an .exe extension (for example, *filename*.exe).

   The BIOS installation begins.
5. Complete the installation by following the on-screen instructions.

**NOTE:** After a message on the screen reports a successful installation, you can delete the downloaded file from your hard drive.

# 10 Using HP PC Hardware Diagnostics (UEFI)

HP PC Hardware Diagnostics is a Unified Extensible Firmware Interface (UEFI) that allows you to run diagnostic tests to determine whether the computer hardware is functioning properly. The tool runs outside the operating system so that it can isolate hardware failures from issues that are caused by the operating system or other software components.

To start HP PC Hardware Diagnostics (UEFI):

1. Turn on or restart the computer, quickly press esc, and then press f2.

   The BIOS searches 3 places for the diagnostic tools, in the following order:

   a. Connected USB drive

      NOTE: To download the HP PC Hardware Diagnostics (UEFI) tool to a USB drive, see Downloading HP PC Hardware Diagnostics (UEFI) to a USB device on page 47.

   b. Hard drive

   c. BIOS

2. When the diagnostic tool opens, use the keyboard arrow keys to select the type of diagnostic test you want to run, and then follow the on-screen instructions.

NOTE: If you need to stop a diagnostic test, press esc.

## Downloading HP PC Hardware Diagnostics (UEFI) to a USB device

NOTE: Instructions for downloading HP PC Hardware Diagnostics (UEFI) are provided in English only.

There are two options to download HP PC Hardware Diagnostics to a USB device:

**Option 1: HP PC Diagnostics homepage**— Provides access to the latest UEFI version

1. Go to http://hp.com/go/techcenter/pcdiags.
2. Click the **UEFI Download** link, and then select **Run**.

**Option 2: Support and Drivers pages**—Provide downloads for a specific product for earlier and later versions

1. Go to http://www.hp.com.
2. Point to **Support**, located at the top of the page, and then click **Download Drivers**.
3. In the text box, enter the product name, and then click **Go**.

   – or –

   Click **Find Now** to let HP automatically detect your product.

4. Select your computer model, and then select your operating system.
5. In the **Diagnostic** section, click **HP UEFI Support Environment**.

   – or –

   Click **Download**, and then select **Run**.

# 11 Backing up, restoring, and recovering

This chapter provides information about the following processes. The information in the chapter is standard procedure for most models.

- Creating recovery media and backups
- Restoring and recovering your system

For additional information, refer to the HP Support Assistant.

▲ From the Start screen, type `support`, and then select the **HP Support Assistant** app.

- or -

From the Windows desktop, click the question mark icon in the notification area, at the far right of the taskbar.

## Creating recovery media and backups (select models only)

- Use HP Recovery Manager after you successfully set up the computer, to create HP Recovery media. This step creates a backup of the HP Recovery partition on the computer. The backup can be used to reinstall the original operating system in cases where the hard drive is corrupted or has been replaced.

  For information on creating recovery media, see Creating HP Recovery media (select models only) on page 49. For information on the recovery options that are available using the recovery media, see Recovering using HP Recovery Manager (select models only) on page 51

- Use Windows tools to create system restore points and create backups of personal information.

### Creating HP Recovery media (select models only)

HP Recovery Manager is a software program that allows you to create recovery media after you successfully set up the computer. HP Recovery media can be used to perform system recovery if the hard drive becomes corrupted. System recovery reinstalls the original operating system and the software programs installed at the factory and then configures the settings for the programs. HP Recovery media can also be used to customize the system or restore the factory image if you replace the hard drive.

- Only one set of HP Recovery media can be created. Handle these recovery tools carefully, and keep them in a safe place.
- HP Recovery Manager examines the computer and determines the required storage capacity for the blank USB flash drive or the number of blank DVD discs that will be required.
- To create recovery discs, your computer must have an optical drive with DVD writer capability, and you must use only high-quality blank DVD-R, DVD+R, DVD-R DL, or DVD+R DL discs. Do not use rewritable discs such as CD±RW, DVD±RW, double-layer DVD±RW, or BD-RE (rewritable Blu-ray) discs; they are not compatible with HP Recovery Manager software. Or, instead, you can use a high-quality blank USB flash drive.
- If your computer does not include an integrated optical drive with DVD writer capability, but you would like to create DVD recovery media, you can use an external optical drive (purchased separately) to create recovery discs, or you can obtain recovery discs for your computer from

support. See the *Worldwide Telephone Numbers* booklet included with the computer. You can also find contact information from the HP website. Go to http://www.hp.com/support, select your country or region, and follow the on-screen instructions. If you use an external optical drive, it must be connected directly to a USB port on the computer; the drive cannot be connected to a USB port on an external device, such as a USB hub.

- Be sure that the computer is connected to AC power before you begin creating the recovery media.
- The creation process can take an hour or more. Do not interrupt the creation process.
- If necessary, you can exit the program before you have finished creating all of the recovery DVDs. HP Recovery Manager will finish burning the current DVD. The next time you start HP Recovery Manager, you will be prompted to continue, and the remaining discs will be burned.

To create HP Recovery media:

1. From the Start screen, type `recovery`, and then select **HP Recovery Manager**.
2. Select **Recovery Media Creation**, and then follow the on-screen instructions.

If you ever need to recover the system, see Recovering using HP Recovery Manager (select models only) on page 51.

## Using Windows tools

You can create system restore points and create backups of personal information using Windows tools.

▲ From the Start screen, type `help`, and then select **Help and Support**.

– or –

From the Windows desktop, click the question mark icon in the notification area, at the far right of the taskbar.

For more information and steps, see Help and Support.

# Restore and recover (select models only)

There are several options for recovering your system. Choose the method that best matches your situation and level of expertise:

- Windows offers several options for restoring from backup, refreshing the computer, and resetting the computer to its original state. For more information and steps, see Help and Support.

  ▲ From the Start screen, type `help`, and then select **Help and Support**.

  – or –

  From the Windows desktop, click the question mark icon in the notification area, at the far right of the taskbar.

- On select models, if you need to correct a problem with a preinstalled application or driver, use the Drivers and Applications Reinstall option of HP Recovery Manager to reinstall the individual application or driver.

  ▲ From the Start screen, type `recovery`, select **HP Recovery Manager**, select **Drivers and Applications Reinstall**, and then follow the on-screen instructions.

- On select models, if you want to reset your computer using a minimized image, you can choose the HP Minimized Image Recovery option from the HP Recovery partition or HP Recovery media. Minimized Image Recovery installs only drivers and hardware-enabling applications. Other applications included in the image continue to be available for installation through the Drivers and Applications Reinstall option in HP Recovery Manager.

  For more information, see Recovering using HP Recovery Manager (select models only) on page 51.

- On select models, if you want to recover the computer's original factory partitioning and content, you can choose the System Recovery option from the HP Recovery partition or use the HP Recovery media that you have created. For more information, see Recovering using HP Recovery Manager (select models only) on page 51. If you have not already created recovery media, see Creating HP Recovery media (select models only) on page 49.

- On select models, if you have replaced the hard drive, you can use the Factory Reset option of HP Recovery media to restore the factory image to the replacement drive. For more information, see Recovering using HP Recovery Manager (select models only) on page 51.

## Recovering using HP Recovery Manager (select models only)

HP Recovery Manager software allows you to recover the computer to its original factory state by using the HP Recovery media that you created or by using the HP Recovery partition (select models only). If you have not already created recovery media, see Creating HP Recovery media (select models only) on page 49.

Using HP Recovery media, you can choose from one of the following recovery options:

- System Recovery—Reinstalls the original operating system, and then configures the settings for the programs that were installed at the factory.
- Minimized Image Recovery (select models only)—Reinstalls the operating system and all hardware-related drivers and software, but not other software applications.
- Factory Reset (select models only)—Restores the computer to its original factory state by deleting all information from the hard drive and re-creating the partitions. Then it reinstalls the operating system and the software that was installed at the factory.

The HP Recovery partition (select models only) allows System Recovery and Minimized Image Recovery.

### What you need to know

- HP Recovery Manager recovers only software that was installed at the factory. For software not provided with the computer, you must either download the software from the manufacturer's website or reinstall the software from the media provided by the manufacturer.

  **IMPORTANT:** Recovery through HP Recovery Manager should be used as a final attempt to correct computer issues.

- HP Recovery media (select models only) must be used if the computer hard drive fails. If you have not already created recovery media, see Creating HP Recovery media (select models only) on page 49.
- To use the Factory Reset option, you must use HP Recovery media (select models only). If you have not already created recovery media, see Creating HP Recovery media (select models only) on page 49.
- If the HP Recovery media (select models only) does not work, you can obtain recovery media for your system from support. See the *Worldwide Telephone Numbers* booklet included with the

computer. You can also find contact information from the HP website. Go to http://www.hp.com/support, select your country or region, and follow the on-screen instructions.

IMPORTANT: HP Recovery Manager does not automatically provide backups of your personal data. Before beginning recovery, back up any personal data you want to retain.

## Using the HP Recovery partition (select models only)

The HP Recovery partition (select models only) allows you to perform a system recovery or minimized image recovery without the need for recovery discs or a recovery USB flash drive. This type of recovery can be used only if the hard drive is still working.

To start HP Recovery Manager from the HP Recovery partition:

1. From the Start screen, type `recovery`, select **Recovery Manager**, and then select **HP Recovery Environment**.
2. Select **Troubleshoot** from the boot options menu.
3. Select **Recovery Manager**, and then follow the on-screen instructions.

## Using HP Recovery media to recover

You can use HP Recovery media to recover the original system. This method can be used if your system does not have an HP Recovery partition or if the hard drive is not working properly.

1. If possible, back up all personal files.
2. Insert the HP Recovery media that you created, and then restart the computer.

   NOTE: If the computer does not automatically restart in HP Recovery Manager, change the computer boot order. See Changing the computer boot order on page 52.

3. Follow the on-screen instructions.

## Changing the computer boot order

If the computer does not restart in HP Recovery Manager, you can change the computer boot order, which is the order of devices where the computer searches for startup information. You can specify that an optical drive or a USB flash drive should be checked first.

To change the boot order:

1. Insert the HP Recovery media you created.
2. Restart the computer, quickly press esc, and then press f9 for boot options.
3. Select the optical drive or USB flash drive you want to boot from.
4. Follow the on-screen instructions.

# 12 Specifications

## Input power

The power information in this section may be helpful if you plan to travel internationally with the computer.

The computer operates on DC power, which can be supplied by an AC or a DC power source. The AC power source must be rated at 100–240 V, 50–60 Hz. Although the computer can be powered from a standalone DC power source, it should be powered only with an AC adapter or a DC power source that is supplied and approved by HP for use with this computer.

The computer can operate on DC power within the following specifications. Operating voltage and current varies by platform.The voltage and current for your computer is located on the regulatory label.

| Input power | Rating |
|---|---|
| Operating voltage and current | 5 V dc @ 2 A / 12 V dc @ 3 A /15 V dc @ 3 A – 45 W USB-C<br>5 V dc @ 3 A / 9 V dc @ 3 A / 12 V dc @ 3.75 A /15 V dc @ 3 A – 45W USB-C<br>5 V dc @ 3 A / 9 V dc @ 3 A / 10 V dc @ 3.75 A / 12 V dc @ 3.75 A / 15 V dc @ 3 A / 20 V dc @ 2.25 A – 45 W USB-C<br>5 V dc @ 3 A / 9 V dc @ 3 A / 12 V dc @ 5 A / 15 V dc @ 4.33 A / 20 V dc @ 3.25 A – 65 W USB-C<br>5 V dc @ 3 A / 9 V dc @ 3A / 10 V dc @ 5 A / 12 V dc @ 5 A / 15 V dc @ 4.33 A / 20 V dc @ 3.25 A – 65 W USB-C<br>5 V dc @ 3 A / 9 V dc @ 3 A / 10 V dc @ 5 A / 12 V dc @ 5 A / 15 V dc @ 5 A / 20 V dc @ 4.5 A – 90 W USB-C<br>19.5 V dc @ 2.31 A – 45 W<br>19.5 V dc @ 3.33 A – 65 W<br>19.5 V dc @ 4.62 A – 90 W<br>19.5 V dc @ 6.15 A – 120 W<br>19.5 V dc @ 6.9 A – 135 W<br>19.5 V dc @ 7.70 A – 150 W<br>19.5 V dc @ 10.3 A – 200 W<br>19.5 V dc @ 11.8 A – 230 W |

NOTE: This product is designed for IT power systems in Norway with phase-to-phase voltage not exceeding 240 V rms.

NOTE: The computer operating voltage and current can be found on the system regulatory label.

# Operating environment

| Factor | Metric | U.S. |
|---|---|---|
| **Temperature** | | |
| Operating | **5°C to 35°C** | 41°F to 95°F |
| Nonoperating | **-20°C to 60°C** | -4°F to 140°F |
| **Relative humidity** (noncondensing) | | |
| Operating | **10% to 90%** | 10% to 90% |
| Nonoperating | **5% to 95%** | 5% to 95% |
| **Maximum altitude** (unpressurized) | | |
| Operating | **-15 m to 3,048 m** | -50 ft to 10,000 ft |
| Nonoperating | **-15 m to 12,192 m** | -50 ft to 40,000 ft |

# 13 Electrostatic Discharge

Electrostatic discharge is the release of static electricity when two objects come into contact—for example, the shock you receive when you walk across the carpet and touch a metal door knob.

A discharge of static electricity from fingers or other electrostatic conductors may damage electronic components. To prevent damage to the computer, damage to a drive, or loss of information, observe these precautions:

- If removal or installation instructions direct you to unplug the computer, first be sure that it is properly grounded.
- Keep components in their electrostatic-safe containers until you are ready to install them.
- Avoid touching pins, leads, and circuitry. Handle electronic components as little as possible.
- Use nonmagnetic tools.
- Before handling components, discharge static electricity by touching an unpainted metal surface.
- If you remove a component, place it in an electrostatic-safe container.

# Index


**A**

AC adapter light, identifying 5
AC adapter, testing 35
accessory battery connector, identifying 5
action keys 11
  identifying 5
airplane mode key 5, 12
antivirus software, using 43
audio-in (microphone), identifying 5
audio-out (headphone), identifying 5
audio-out (headphone)/audio-in (microphone) jack, identifying 6

**B**

backing up software and information 44
backups 49
battery
  conserving power 33
  discharging 33
  disposing 34
  factory-sealed 31
  finding information 32
  resolving low battery level 33
  storing 33
  user-replaceable 32
battery bay, identifying 6
battery information, finding 32
battery lock, identifying 6
battery power 31
battery release latch, identifying 6
battery temperature 33
bay, battery 6
Beats Audio 20
Beats Audio Control Panel 20
Beats Audio hot key 20
best practices 1
BIOS
  determining version 45
  downloading an update 46
  starting the Setup Utility 45
  updating 45
Bluetooth compartment, identifying 6
Bluetooth device 14, 16
Bluetooth label 13
boot order
  changing 52
bottom 13
buttons
  left TouchPad 7
  power 7
  right TouchPad 8

**C**

caps lock light, identifying 6
caring for your computer 38
cleaning your computer 38
components 5
computer, traveling 33
connecting to a WLAN 15
connector, power 8
control zone
  left 7
  right 8
corporate WLAN connection 15
critical security updates, installing 43

**D**

deleted files, restoring 50
Disk Cleanup software 37
Disk Defragmenter software 37
DisplayPort
  connecting 23
  identifying 6
docking connector, identifying 6

**E**

electrostatic discharge 55
esc key, identifying 6
external AC power, using 34
external monitor port 21
external monitor port, identifying 6

**F**

fingerprint reader
  identifying 6
  using 42
fingerprints, registering 42
firewall software 43
fn key, identifying 6

**G**

getting to know your computer 4

**H**

hard drive light, identifying 7
HDMI port
  connecting 21
  identifying 7
HDMI, configuring audio 22
headphones, connecting 19
headsets, connecting 20
Hibernation
  exiting 30
  initiating 30
high-definition devices, connecting 21, 23, 24
HP Apps Store, visiting 1
HP PC Hardware Diagnostics (UEFI)
  downloading 47
HP Recovery Manager
  correcting boot problems 52
  starting 52
HP Recovery media
  creating 49
  recovery 52
HP Recovery partition
  recovery 52
HP resources 2
HP Triple Bass Reflex Subwoofer, identifying 7

**I**

initiating Sleep and Hibernation 29
input power 53

installing
critical security updates 43
optional security cable lock 44
integrated numeric keypad, identifying 7
internal display switch, identifying 7
internal microphones, identifying 7
Internet security software, using 42

J
jacks
audio-in (microphone) 5
audio-out (headphone) 5
audio-out (headphone)/audio-in (microphone) 6
network 8
RJ-45 (network) 8

K
keyboard and mouse, using 28
keys
action 5
airplane mode 5, 12
esc 6
fn 6
num lock 7
Windows 10
Windows applications 10

L
labels
Bluetooth 13
Microsoft Certificate of Authenticity 13
regulatory 13
serial number 12
service 12
wireless certification 13
WLAN 13
latches
battery release 6
service door release 9
left control zone, identifying 7
left-edge swipe TouchPad and touch screen gesture 27
lights
AC adapter 5
caps lock 6
hard drive 7
mute 7
power 8
RJ-45 (network) status 8
TouchPad 9
webcam 10
wireless 10
locating information
hardware 4
software 4

M
maintenance
Disk Cleanup 37
Disk Defragmenter 37
updating programs and drivers 37
memory card reader, identifying 7
memory card, identifying 7
microphone, connecting 20
minimized image recovery 52
minimized image, creating 51
Miracast 24
mouse, external
setting preferences 25
mute light, identifying 7

N
network jack, identifying 8
num lock key, identifying 7

O
one-finger slide touch screen gesture 27
operating environment 54
optical drive, identifying 7
original system recovery 51

P
passwords
Setup Utility (BIOS) 42
Windows 41
ports
DisplayPort 6
external monitor 6, 21
HDMI 7, 21, 23
Miracast 24
USB 2.0 9
USB 2.0 charging (powered) 9
USB 3.0 9
USB 3.0 (powered) charging 9
VGA 21
power
AC 34
battery 31
power button
identifying 7
power connector, identifying 8
power lights, identifying 8
power meter, using 31
power settings, using 31
product name and number, computer 12
public WLAN connection 15

R
recover
options 50
recovery
discs 49, 52
HP Recovery Manager 51
media 52
starting 52
supported discs 49
system 51
USB flash drive 52
using HP Recovery media 50
recovery media
creating 49
creating using HP Recovery Manager 50
regulatory information
regulatory label 13
wireless certification labels 13
right control zone, identifying 8
right-edge swipe TouchPad and touch screen gesture 26
RJ-45 (network) jack, identifying 8
RJ-45 (network) status lights, identifying 8

S
security cable lock, installing 44
security cable slot, identifying 8
serial number 12
serial number, computer 12
service door release latch 9

service door, identifying 8
service labels, locating 12
setting password protection on wakeup 30
Setup Utility (BIOS) passwords 42
sharing media 17
shipping the computer 39
shutdown 35
SIM slot, identifying 9
Sleep
exiting 30
initiating 30
Sleep and Hibernation
initiating 29
slots
memory card reader 7
security cable 8
SIM 9
software
Disk Cleanup 37
Disk Defragmenter 37
software updates, installing 43
speakers
connecting 19
identifying 9
Starting right 1
storing a battery 33
supported discs, recovery 49
system recovery 51
system restore point
creating 50
system restore point, creating 49

## T

tap TouchPad and touch screen gesture 25
temperature 33
testing an AC adapter 35
top-edge swipe and bottom-edge swipe TouchPad and touch screen gesture 27
touch screen gesture, one-finger slide 27
TouchPad
using 25
TouchPad and touch screen gestures
left-edge swipe 27
right-edge swipe 26
tap 25
top-edge swipe and bottom-edge swipe 27
two-finger click 26
two-finger pinch/zoom 26
two-finger scroll 25
TouchPad light, identifying 9
TouchPad zone, identifying 9
TouchPad, buttons 7, 8
traveling with the computer 13, 33, 39
turning off the computer 35
two-finger click TouchPad and touch screen gesture 26
two-finger pinch/zoom TouchPad and touch screen gesture 26
two-finger scroll TouchPad and touch screen gesture 25

## U

unresponsive system 35
updating programs and drivers 37
USB 2.0 charging (powered) port, identifying 9
USB 2.0 port, identifying 9
USB 3.0 charging (powered) port, identifying 9
USB 3.0 port, identifying 9
using a keyboard and mouse 28
using external AC power 34
using passwords 41
using the TouchPad 25

## V

vents, identifying 9
VGA port, connecting 21
video 20

## W

webcam
identifying 10
using 19
webcam light, identifying 10
Windows
system restore point 49, 50
Windows applications key, identifying 10
Windows key, identifying 10
Windows passwords 41
Windows tools
using 50
Wireless Assistant software 14
wireless button 14
wireless certification label 13
wireless controls
button 14
operating system 14
Wireless Assistant software 14
wireless light 10, 14
wireless network (WLAN)
connecting 15
corporate WLAN connection 15
functional range 16
public WLAN connection 15
wireless network, securing 44
WLAN antennas, identifying 10
WLAN device 13
WLAN label 13
WWAN antennas, identifying 10
WWAN device 16

# Regulatory, Safety, and Environmental Notices

User Guide

© Copyright 2018, 2019 HP Development Company, L.P.

Bluetooth is a trademark owned by its proprietor and used by HP Inc. under license. ENERGY STAR and the ENERGY STAR mark are registered U.S. marks. Java is a registered trademark of Oracle and/or its affiliates.

The information contained herein is subject to change without notice. The only warranties for HP products and services are set forth in the express warranty statements accompanying such products and services. Nothing herein should be construed as constituting an additional warranty. HP shall not be liable for technical or editorial errors or omissions contained herein.

Fourth Edition: April 2019

First Edition: March 2018

Document Part Number: L25269-004

# About This Guide

This guide provides regulatory, safety, and environmental information that is compliant with U.S., Canadian, and international regulations for notebook computers, tablets, desktops, thin clients, personal workstations, all-in-ones, and point-of-sale terminals.

To access the latest user guides, go to http://www.hp.com/support, and follow the instructions to find your product. Then select **User Guides**.

**WARNING!** Indicates a hazardous situation that, if not avoided, **could** result in serious injury or death.

**CAUTION:** Indicates a hazardous situation that, if not avoided, **could** result in minor or moderate injury.

**IMPORTANT:** Indicates information considered important but not hazard-related (for example, messages related to property damage). Warns the user that failure to follow a procedure exactly as described could result in loss of data or in damage to hardware or software. Also contains essential information to explain a concept or to complete a task.

**NOTE:** Contains additional information to emphasize or supplement important points of the main text.

**TIP:** Provides helpful hints for completing a task.

# Table of contents


**1 Regulatory notices ..... 1**

Accessing regulatory labels ..... 1

Federal Communications Commission notice ..... 1

Modifications ..... 2

Cables ..... 2

Products with wireless LAN devices or HP Mobile Broadband Modules ..... 2

Belarus regulatory notice ..... 3

Brazil notice ..... 3

Canada notices ..... 3

European Union regulatory notices ..... 3

Declaration of Conformity ..... 3

Products with radio functionality (EMF) ..... 4

Restrictions for products with radio functionality (select products only) ..... 4

Radio frequency bands and maximum power levels (select products and countries only) ..... 4

Ergonomics notice ..... 5

European telephone network declaration (Modem/Fax) ..... 5

Australia and New Zealand notice ..... 5

China WWAN notice ..... 5

China radio equipment notice ..... 5

Japan notice ..... 6

Wireless LAN, Wireless WAN, and Bluetooth® certification markings ..... 6

Mexico notice ..... 6

Singapore wireless notice ..... 7

South Korea notices ..... 7

Thailand wireless notice ..... 7

Taiwan NCC notices ..... 8

Wireless LAN 802.11a devices ..... 8

Wireless LAN 802.11 devices/Bluetooth devices/Short range devices ..... 8

Airline travel notice ..... 8

User-replaceable battery notices ..... 8

Factory-sealed battery notices ..... 9

Laser compliance ..... 9

Telecommunications device approvals ..... 9

Modem notices ..... 10

U.S. modem statements ..... 10

U.S. modem declarations ..... 11
Canada modem statements ..... 12
Japan modem statements ..... 12
New Zealand modem statements ..... 12
Voice support ..... 13
Macrovision Corporation notice ..... 13

**2 Safety notices ..... 14**
Important safety information ..... 14
Heat-related safety warning notice ..... 15
Potential safety conditions notice ..... 15
Installation conditions ..... 15
Acoustics notice ..... 15
Battery notices ..... 15
Fan notices ..... 16
Headset and earphone volume level notice ..... 16
Laser safety ..... 16
Power supply and power cord set requirements ..... 17
Power supply class I grounding requirements ..... 17
Brazil notice ..... 17
Denmark ..... 17
Finland ..... 17
Norway ..... 17
Sweden ..... 17
Power supply requirements ..... 17
For use in Norway ..... 17
Power cord set requirements ..... 18
Power cord notice ..... 18
DC plug of external HP power supply ..... 18
Japan power cord notice ..... 19
Japan power cord requirements ..... 19
Pinch hazard ..... 19
TV antenna connectors protection ..... 19
External television antenna grounding ..... 19
Lightning protection ..... 19
Note to CATV system installer ..... 20
Travel notice ..... 20
China safety notices ..... 21
China: Altitude notice ..... 21
China: Tropical warning notice ..... 21
Norway and Sweden: Cable grounding notice for products with a TV tuner ..... 22

使用過度恐傷害視力 ..... 22

**3 Environmental notices ..... 23**

Electronic hardware, packaging and battery recycling ..... 23
Disposal of waste equipment by users ..... 23
Brazil alkaline battery disposal ..... 23
Brazil hardware recycling information ..... 23
Taiwan battery recycling information ..... 24
ENERGY STAR® Certification (select products only) ..... 24
Chemical substances ..... 25
Mercury statement ..... 25
Perchlorate material–special handling may apply ..... 25
China environmental notices ..... 26
China PC energy label ..... 26
China restriction of hazardous substances (RoHS) for notebook and tablet computers ..... 29
The Table of Hazardous Substances/Elements and their Content ..... 29
笔记本电脑和平板电脑产品中有害物质或元素的名称及含量 ..... 30
China restriction of hazard substances (ROHS) for desktops, thin clients, personal workstations, all-in-ones, and point-of-sale terminals ..... 31
The Table of Hazardous Substances/Elements and their Content ..... 31
台式机、瘦客户端、个人工作站、一体机和销售点终端产品中有害物质或元素的名称及含量 (ROHS) ..... 33
台灣針對筆記型電腦和平板電腦的有害物質限制使用管理辦法 (RoHS) ..... 35
限用物質含有情況標示聲明書 ..... 35
台灣針對桌上型電腦、精簡型電腦、個人工作站、一體成形電腦及銷售點終端機的有害物質限制使用管理辦法 (RoHS) ..... 36
限用物質含有情況標示聲明書 ..... 36
India restriction of hazardous substances (RoHS) ..... 37
Information for European Union Commission Regulation 1275/2008 ..... 37
IT ECO declarations ..... 37
Japan restriction of hazardous substances (RoHS) ..... 37
Ley para el Aprovechamiento Sustentable de la Energía de México ..... 38
Turkey WEEE regulation ..... 38
TCO Certified ..... 39
TCO Certified Edge ..... 40

**Index ..... 41**

# 1 Regulatory notices

This chapter provides country- and region-specific non-wireless and wireless regulatory notices and compliance information for the computer product. Some of these notices may not apply to your product.

One or more integrated wireless devices may be installed. In some environments, the use of wireless devices may be restricted. Such restrictions may apply aboard airplanes, in hospitals, near explosives, in hazardous locations, and so on. If you are uncertain of the policy that applies to the use of this product, ask for authorization to use it before you turn it on.

## Accessing regulatory labels

Regulatory labels, which provide country or regional regulatory information (for example, FCC ID), may be physically located on the bottom of the computer, inside the battery bay (select products only), under the removable service door (select products only), on the back of the display, or on the wireless or modem module.

Some products may also provide electronic regulatory labels (e-labels) that can be accessed through the system BIOS.

**NOTE:** Electronic labels are not available on all products.

**NOTE:** Devices not for sale or use in the United States may not contain a FCC ID.

To view electronic regulatory labels:

1. Turn on or restart the computer.
2. Press esc or f10 to enter Computer Setup.
3. Use a pointing device or the arrow keys to select **Advanced**, select **Electronic Labels**, and then press enter.
4. To view an electronic label, use a pointing device or the arrow keys to select one of the listed items, and then press **OK**.

   **NOTE:** The list of available electronic label items varies depending on the computer model and installed devices.

5. To exit Computer Setup menus without making any changes:

   Select the **Exit** icon in the lower-right corner of the screen, and then follow the on-screen instructions.

   – or –

   Use the arrow keys to select **Main**, select **Ignore Changes and Exit**, and then press enter.

## Federal Communications Commission notice

This equipment has been tested and found to comply with the limits for a Class B digital device, pursuant to Part 15 of the FCC Rules. These limits are designed to provide reasonable protection against harmful interference in a residential installation. This equipment generates, uses, and can radiate radio frequency energy and, if not installed and used in accordance with the instructions, may cause harmful interference to radio communications. However, there is no guarantee that interference will not occur in a particular installation.

If this equipment does cause harmful interference to radio or television reception, which can be determined by turning the equipment off and on, the user is encouraged to try to correct the interference by one or more of the following measures:

- Reorient or relocate the receiving antenna.
- Increase the separation between the equipment and receiver.
- Connect the equipment to an outlet on a circuit different from that to which the receiver is connected.
- Consult the dealer or an experienced radio or television technician for help.

This device complies with Part 15 of the FCC Rules. Operation is subject to the following two conditions:

1. This device may not cause harmful interference, and
2. This device must accept any interference received, including interference that may cause undesired operation.

For questions regarding this product:

- Write to:

  HP Inc.

  1501 Page Mill Road

  Palo Alto, CA 94304
- Call HP at 650-857-1501

  – or –
- Email techregshelp@hp.com

To identify this product, refer to the part, series, or model number found on the product.

## Modifications

The FCC requires the user to be notified that any changes or modifications made to this device that are not expressly approved by HP may void the user's authority to operate the equipment.

## Cables

To maintain compliance with FCC Rules and Regulations, connections to this device must be made with shielded cables having metallic RFI/EMI connector hoods.

## Products with wireless LAN devices or HP Mobile Broadband Modules

This device must not be co-located or operating in conjunction with any other antenna or transmitter.

⚠ **WARNING!** **Exposure to Radio Frequency Radiation** The radiated output power of this device is below the FCC radio frequency exposure limits. Nevertheless, the device should be used in a manner that is in conformance with the expected typical usage.

# Belarus regulatory notice

The product complies with the Belarus National Radio/Telecom Technical Regulation TR 2018/024/BY.

# Brazil notice

Este equipamento opera em caráter secundário, isto é, não tem direito a proteção contra interferência prejudicial, mesmo de estações do mesmo tipo, e não pode causar interferência a sistemas operando em caráter primário.

Este equipamento atende aos limites de Taxa de Absorção Específica referente à exposição a campos elétricos, magnéticos e eletromagnéticos de radiofreqüências adotados pela ANATEL.

Ao operar o dispositivo a uma distância muito próxima do seu corpo, utilize um acessório de armazenamento não metálico para posicionar o dispositivo a uma distância mínima de 1,5 cm do corpo.

**IMPORTANT:** A alimentação de energia é predefinida para 220/230Vv. Se você possuir tomada elétrica de 110/115Vv, por favor, altere a chave na parte traseira do seu computador para a tensão correta.

# Canada notices

This Class B digital apparatus meets all requirements of the Canadian Interference-Causing Equipment Regulations, CAN ICES-3(B)/NMB-3(B). If this device has WLAN or Bluetooth capability, the device complies with Industry Canada licence-exempt RSS standard(s). Operation is subject to the following two conditions: (1) this device may not cause interference, and (2) this device must accept any interference, including interference that may cause undesired operation of the device.

**WARNING!** **Exposure to Radio Frequency Radiation:** The radiated output power of this device is below the Industry Canada radio frequency exposure limits. Nevertheless, the device should be used in a manner that is in conformance with the expected typical usage.

**IMPORTANT:** When using IEEE 802.11a, n, or ac wireless LAN, this product is restricted to indoor use, due to its operation in the 5.15- to 5.25-GHz frequency range. Industry Canada requires this product to be used indoors for the frequency range of 5.15 GHz to 5.25 GHz to reduce the potential for harmful interference to co-channel mobile satellite systems. High-power radar is allocated as the primary user of the 5.25- to 5.35-GHz and 5.65- to 5.85-GHz bands. These radar stations can cause interference with and/or damage to this device.

The antennas for this device are not replaceable. Any attempt at user access will damage your computer.

# European Union regulatory notices

## Declaration of Conformity

Products bearing the CE marking have been constructed so that they can operate in at least one EU Member State and comply with one or more of the following EU Directives as may be applicable:

RED 2014/53/EU; Low Voltage Directive 2014/35/EU; EMC Directive 2014/30/EU; Ecodesign Directive 2009/125/EC; RoHS Directive 2011/65/EU.

Compliance with these directives is assessed using applicable European Harmonised Standards.

The full Declaration of Conformity can be found at the following website: http://www.hp.eu/certificates (Search with the product model name or its Regulatory Model Number (RMN), which may be found on the regulatory label.)

The point of contact for regulatory matters is HP Deutschland GmbH, HQ-TRE, 71025, Boeblingen, Germany. Email techregshelp@hp.com

## Products with radio functionality (EMF)

This product incorporates a radio transmitting and receiving device. For notebook computers in normal use, a separation distance of 20 cm ensures that radio frequency exposure levels comply with EU requirements. Products designed to be operated at closer proximities, such as tablet computers, comply with applicable EU requirements in typical operating positions. Products can be operated without maintaining a separation distance unless otherwise indicated in instructions specific to the product.

## Restrictions for products with radio functionality (select products only)

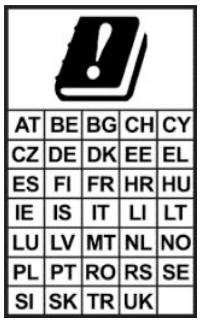


**IMPORTANT:** IEEE 802.11x wireless LAN with 5.15–5.35 GHz frequency band is restricted for indoor use only in all countries reflected in the matrix. Using this WLAN application outdoors might lead to interference issues with existing radio services.

**IMPORTANT:** Fixed outdoor installations for WiGig application (57–66 GHz frequency band) are excluded in all countries reflected in the matrix.

## Radio frequency bands and maximum power levels (select products and countries only)

| Radio Technology | Maximum Transmit Power EIRP (mW) |
|---|---|
| Bluetooth; 2,4 GHz | 100 |
| NFC; 13,56 MHz | 10 |
| RFID; 125 kHz/13,56 MHz | Less than 1 |
| WLAN Wi-Fi 802.11x; 2,4 GHz | 100 |
| WLAN Wi-Fi 802.11x; 5 GHz | 200 |
| WWAN 4G LTE; 700/800/900/1800/2100/2300/2600/3500 MHz | 200 |
| WWAN 3G UTMS; 900/2100 MHz | 250 |
| WWAN 2G GSM GPRS EDGE; 900 MHz | 2000 |
| WWAN 2G GSM GPRS EDGE; 1800 MHz | 1000 |
| WiGig 802.11ad; 60 GHz | 316 |
| **NOTE:** Use only HP-supported software drivers and correct country settings to ensure compliance. | |

### Ergonomics notice

When a mobile computer is used at the office workstation for display work tasks where the Visual Display Unit (VDU) Directive 90/270/EEC is applicable, an adequate external keyboard is required. Depending on the application and task, an adequate external monitor may also be necessary to attain working conditions comparable to a workstation setup.

Ref: EK1-ITB 2000 (voluntary GS certification)

Mobile computers bearing the "GS" approval mark meet the applicable ergonomic requirements. Without external keyboards, they are suitable only for short-time use for VDU tasks.

During mobile use with disadvantageous illumination conditions (e.g. direct sunlight) reflections may occur, which result in reduced readability.

A computer system comprising HP brand products meets the applicable ergonomic requirements if all affected constituent products bear the "GS" approval mark, for example Business Desktop PC, keyboard, PC-mouse and monitor.

### European telephone network declaration (Modem/Fax)

The product herewith complies with the requirements of the applicable Directive and carries the CE marking accordingly. However, due to differences between the individual PSTNs provided in different countries/regions, the approval does not, of itself, give an unconditional assurance of successful operation on every PSTN network termination point. In the event of problems, you should contact your equipment supplier in the first instance.

## Australia and New Zealand notice

This equipment incorporates a radio transmitting and receiving device. In normal use, a separation distance of 20 cm ensures that radio frequency exposure levels comply with the Australian and New Zealand Standards.

The computer must be connected to the Telecommunication Network through a line cord that meets the requirements of AS/CA S008.

⚠ **WARNING!** Modems without integral RJ11 connector that are shipped with this computer should not be installed in any other device.

## China WWAN notice

重要信息：本公司建议用户通过官方渠道进行系统更新，非官方渠道的更新可能会带来安全风险。

## China radio equipment notice

型号核准代码显示在产品本体的铭牌上

# Japan notice

**V-2 規定適合の場合**

この装置は，クラスB情報技術装置です。この装置は，家庭環境で使用することを目的としていますが，この装置がラジオやテレビジョン受信機に近接して使用されると，受信障害を引き起こすことがあります。
取扱説明書に従って正しい取り扱いをして下さい。 VCCI－B

**VCCI32-1 規定適合の場合**

この装置は、クラスB機器です。この装置は、住宅環境で使用することを目的としていますが、この装置がラジオやテレビジョン受信機に近接して使用されると、受信障害を引き起こすことがあります。
取扱説明書に従って正しい取り扱いをして下さい。 VCCI－B

5GHz 帯を使用する特定無線設備は屋内使用に限られています。この機器を屋外で使用することは電波法で禁じられています。

## Wireless LAN, Wireless WAN, and Bluetooth® certification markings

この機器は、技術基準適合証明または工事設計認証を受けた無線設備を搭載しています

This product contains certified radio equipment.

Some products may use electronic regulatory labels (e-labels). To view the certification mark and numbers on an e-label, please refer to the previous “Accessing regulatory labels” section.

一部の製品では、電子規定ラベル（e ラベル）が使用されています。e ラベルの技適マークと認証番号を確認するには、「規定ラベルの確認」の項目をご覧ください

# Mexico notice

Declaración para México

La operación de este equipo está sujeta a las siguientes dos condiciones: (1) es posible que este equipo o dispositivo no cause interferencia perjudicial y (2) este equipo o dispositivo debe aceptar cualquier interferencia, incluyendo la que pueda causar su operación no deseada. The regulatory model number for this product is on the regulatory label.

If your product is provided with wireless accessories such as a keyboard or mouse and you need to identify the model of the accessory, refer to the label included on that accessory. The regulatory model number for this product is on the regulatory label.

# Singapore wireless notice

Turn off any WWAN devices while you are aboard aircraft. The use of these devices aboard aircraft is illegal, may be dangerous to the operation of the aircraft, and may disrupt the cellular network. Failure to observe this instruction may lead to suspension or denial of cellular services to the offender, or legal action, or both.

Users are reminded to restrict the use of radio equipment in fuel depots, chemical plants, and where blasting operations are in progress.

As with other mobile radio transmitting equipment, users are advised that for satisfactory operation of the equipment and for the safety of personnel, no part of the human body should be allowed to come too close to the antennas during operation of the equipment.

This device has been designed to comply with applicable requirements for exposure to radio waves, based on scientific guidelines that include margins intended to assure the safety of all people, regardless of health and age. These radio wave exposure guidelines employ a unit of measurement known as the specific absorption rate (SAR). Tests for SAR are conducted using standardized methods, with the phone transmitting at its highest certified power level in all used frequency bands. The SAR data information is based on CENELEC's standards EN50360 and EN50361, which use the limit of 2 watts per kilogram, averaged over 10 grams of tissue.

# South Korea notices

무선적용제품

해당 무선설비가 전파혼신 가능성이 있으므로 인명안전과 관련된 서비스는 할 수 없음 (무선모듈 제품이 설치되어 있는 경우).

몸 가까이에서 장치를 작동할 경우 , 비금속 저장 액세서리를 사용하여 장치와 몸 사이에 2.5cm 이상의 거리를 유지하십시오 .

# Thailand wireless notice

เครื่องโทรคมนาคมและอุปกรณ์นี้ มีความสอดคล้องตามมาตรฐานหรือข้อกำหนดของ กสทช.

(This telecommunication equipment conforms to the requirements of NBTC.)

เครื่องวิทยุคมนาคมนี้มีระดับการแผ่คลื่นแม่เหล็กไฟฟ้าสอดคล้องตามมาตรฐานความปลอดภัยต่อสุขภาพของมนุษย์จากการใช้เครื่องวิทยุคมนาคมที่คณะกรรมการกิจการโทรคมนาคมแห่งชาติประกาศกำหนด

This radio communication equipment has the electromagnetic field strength in compliance with the Safety Standard for the Use of Radio communication Equipment on Human Health announced by the National Telecommunications Commission.

# Taiwan NCC notices

## Wireless LAN 802.11a devices

在 5.25G~5.35G 頻帶內操作之無線
資訊傳輸設備僅適於室內使用

應避免影響附近雷達系統之操作。

## Wireless LAN 802.11 devices/Bluetooth devices/Short range devices

低功率電波輻射性電機管理辦法

第十二條　經型式認證合格之低功率射頻電機，非經許可，公司、商號或使用者均不得擅自變更頻率、加大功率或變更原設計之特性及功能。

第十四條　低功率射頻電機之使用不得影響飛航安全及干擾合法通信；經發現有干擾現象時，應立即停用，並改善至無干擾時方得繼續使用。

前項合法通信，指依電信法規定作業之無線電通信。低功率射頻電機須忍受合法通信或工業、科學及醫療用電波輻射性電機設備之干擾。

# Airline travel notice

Use of electronic equipment aboard commercial aircraft is at the discretion of the airline.

# User-replaceable battery notices

When a battery has reached the end of its useful life, do not dispose of the battery in general household waste. Follow the local laws and regulations in your area for computer battery disposal.

HP encourages customers to recycle used electronic hardware, HP original print cartridges, and rechargeable batteries. For more information about recycling programs, refer to the HP website at http://www.hp.com/recycle.

For information about removing a user-replaceable battery, refer to the user guide included with the product.

# Factory-sealed battery notices

The battery[ies] in this product cannot be easily replaced by users themselves. Removing or replacing the battery could affect your warranty coverage. If a battery is no longer holding a charge, contact support.

When a battery has reached the end of its useful life, do not dispose of the battery in general household waste. Follow the local laws and regulations in your area for battery disposal.

# Laser compliance

⚠ **WARNING!** Use of controls or adjustments, or performance of procedures other than those specified in the laser product installation guide, may result in hazardous radiation exposure. To reduce the risk of exposure to hazardous radiation:

- Do not try to open the module enclosure. There are no user-serviceable components inside.
- Do not operate controls, make adjustments, or perform procedures to the laser device other than those specified in the laser product installation guide.
- Allow only authorized service providers to repair the unit.

This product may be provided with an optical storage device (for example, a CD or DVD drive) and/or a fiber optic transceiver. Each of these devices that contain a laser is classified as a Class 1 Laser Product in accordance with IEC/EN 60825-1 and meets the requirements for safety of that standard.

Each laser product complies with US FDA regulations of 21 CFR 1040.10 and 1040.11 or complies with those regulations except for deviations pursuant to Laser Notice No. 50 dated June 24, 2007.

# Telecommunications device approvals

The telecommunications device in the computer is approved for connection to the telephone network in the countries and regions whose approval markings are indicated on the product label located on the bottom of the computer or on the modem.

Refer to the user guide included with the product to ensure that the product is configured for the country or region in which the product is located. Selecting a country or region other than the one in which it is located may cause the modem to be configured in a way that violates the telecommunication regulations/laws of that country or region. In addition, the modem may not function properly if the correct country or region selection is not made. If, when you select a country or region, a message appears that states that the country or region is not supported, this means that the modem has not been approved for use in this country or region and thus should not be used.

# Modem notices

## U.S. modem statements

This equipment complies with Part 68 of the FCC Rules and the requirements adopted by the ACTA. On the bottom of the computer or on the modem is a label that contains, among other information, a product identifier in the format US:AAAEQ##TXXXX. Provide this information to the telephone company if you are requested to do so.

**Applicable certification jack USOC = RJ11C.** A plug and jack used to connect this equipment to the premises wiring and telephone network must comply with the applicable FCC Part 68 rules and requirements adopted by the ACTA. A compliant telephone cord and modular plug is provided with this product. It is designed to be connected to a compatible modular jack that is also compliant. See installation instructions for details.

The REN is used to determine the number of devices that may be connected to a telephone line. Excessive RENs on a telephone line may result in the devices not ringing in response to an incoming call. In most but not all locations, the sum of RENs should not exceed five (5.0). To be certain of the number of devices that may be connected to a line, as determined by the total RENs, contact the local telephone company. For products approved after July 23, 2001, the REN for this product is part of the product identifier that has the format US:AAAEQ##TXXXX. The digits represented by ## are the REN without a decimal point (e.g., 03 is a REN of 0.3). For earlier products, the REN is separately shown on the label.

If this HP equipment causes harm to the telephone network, the telephone company will notify you in advance that temporary discontinuance of service may be required. But, if advance notice isn't practical, the telephone company will notify you as soon as possible. Also, you will be advised of your right to file a complaint with the FCC if you believe it is necessary.

The telephone company may make changes to its facilities, equipment, operations, or procedures that could affect the operation of the equipment. If this happens, the telephone company will provide advance notice in order for you to make necessary modifications to maintain uninterrupted telephone service.

If trouble is experienced with this equipment, call technical support. If the equipment is causing harm to the telephone network, the telephone company may request that you disconnect the equipment until the problem is resolved. You should perform repairs only to the equipment specifically discussed in the “Troubleshooting” section of the user guide, if one is provided.

Connection to party line service is subject to state tariffs. Contact the state public utility commission, public service commission, or corporation commission for information.

If your home has specially wired alarm equipment connected to the telephone line, ensure that the installation of this HP equipment does not disable your alarm equipment. If you have questions about what will disable alarm equipment, consult your telephone company or a qualified installer.

The Telephone Consumer Protection Act of 1991 makes it unlawful for any person to use a computer or other electronic device, including a fax machine, to send any message unless such message clearly contains in a margin at the top or bottom of each transmitted page, or on the first page of the transmission, the date and time it is sent and an identification of the business, other entity, or other individual sending the message, and the telephone number of the sending machine or such business, other entity, or individual. (The telephone number provided may not be a 900 number or any other number for which charges exceed local or long-distance transmission charges).

In order to program this information into your fax machine, you should complete the steps outlined in the faxing software instructions.

## U.S. modem declarations

Refer to the following modem vendor declarations for the modem device installed in your computer:

agere systems

Brad Grande
Technical Manager

1110 American Parkway NE
Lehigh Valley Central Campus
Allentown, PA 18109
Phone: 610-712-7853
bgrande@agere.com

**Supplier's Declaration of Conformity**

Reference Number: Delphi D40 (revision AM5)
Place of Issue: Allentown, PA, USA
Date of Issue: 30th November 2006

Agere Systems Inc. at 1110 American Parkway NE, Lehigh Valley Central Campus, Allentown, PA 18109 in the United States of America, hereby certifies that the Modem, bearing labelling identification number **US: AGSMD01BDELPHI** complies with the Federal Communications Commission's ("FCC") Rules and Regulations 47 CFR Part 68, and the Administrative Council on Terminal Attachments ("ACTA")-adopted technical criteria TIA/EIA/IS-968, 968-A, 968-A-1, 968-A-2 and 968-A-3 Telecommunications – Telephone Terminal Equipment –Technical Requirements for Connection of Terminal Equipment To the Telephone Network.

Brad Grand
Technical Manager

## Canada modem statements

This equipment meets the applicable Industry Canada technical specifications.

The Ringer Equivalence Number, REN, is an indication of the maximum number of devices allowed to be connected to a telephone interface. The termination on an interface may consist of any combination of devices, subject only to the requirement that the sum of the RENs of all devices does not exceed 5. The REN for this terminal equipment is 1.0.

## Japan modem statements

If the computer does not have the Japanese certification mark on the bottom of the computer, refer to the appropriate certification marking below.

The Japanese certification mark for the V.92 56K Data/Fax Modem is below:

If the computer does not have the Japanese certification mark on the bottom of the computer, refer to the appropriate certification marking below.

The Japanese certification mark for the LSI Corporation PCI-SV92EX Soft modem is below:

## New Zealand modem statements

The grant of a Telepermit for any item of terminal equipment indicates only that Telecom has accepted that the item complies with minimum conditions for connection to its network. It indicates no endorsement of the product by Telecom, nor does it provide any sort of warranty. Above all, it provides no assurance that any item will work correctly in all respects with another item of Telepermitted equipment of a different make or model, nor does it imply that any product is compatible with all of Telecom's network services.

This equipment is not capable, under all operating conditions, of correct operation at the higher speeds for which it is designed. Telecom will accept no responsibility should difficulties arise in such circumstances.

If this device is equipped with pulse dialing, note that there is no guarantee that Telecom lines will always continue to support pulse dialing.

Use of pulse dialing, when this equipment is connected to the same line as other equipment, may give rise to bell tinkle or noise and may also cause a false answer condition. Should such problems occur, the user should *not* contact the Telecom Faults Service.

Some parameters required for compliance with Telecom's Telepermit requirements are dependent on the equipment (PC) associated with this device. The associated equipment shall be set to operate within the following limits for compliance with Telecom's Specifications:

a. There shall be no more than 10 call attempts to the same number within any 30-minute period for any single manual call initiation.

b. The equipment shall go on-hook for a period of not less than 30 seconds between the end of one attempt and the beginning of the next attempt.

c. Where automatic calls are made to different numbers, the equipment shall be set to go on-hook for a period of not less than 5 seconds between the end of one attempt and the beginning of the next attempt.

d. The equipment shall be set to ensure that calls are answered between 3 and 30 seconds of receipt of ringing (So set between 2 and 10).

### Voice support

All persons using this device for recording telephone conversations shall comply with New Zealand law. This requires that at least one party to the conversation is aware that it is being recorded. In addition, the Principles enumerated in the Privacy Act 1993 shall be complied with in respect to the nature of the personal information collected, the purpose for its collection, how it is to be used, and what is disclosed to any other party.

This equipment shall not be set to make automatic calls to the Telecom '111' Emergency Service.

## Macrovision Corporation notice

This product incorporates copyright protection technology that is protected by method claims of certain U.S. patents and other intellectual property rights owned by Macrovision Corporation and other rights owners. Use of this copyright protection technology must be authorized by Macrovision Corporation and is intended for home and other limited viewing uses only, unless otherwise authorized by Macrovision Corporation. Reverse engineering or disassembly is prohibited.

# 2 Safety notices

## Important safety information

**WARNING!** To reduce the risk of serious injury, read the *Safety & Comfort Guide*. It describes proper workstation setup, posture, and health and work habits for computer users, and provides important electrical and mechanical safety information. This guide is located on the Web at http://www.hp.com/ergo and on the Documentation CD that is included with the product.

The computer may be heavy; be sure to use ergonomically correct lifting procedures when moving it.

Install the computer near an AC outlet. The AC power cord is your computer's main AC disconnecting device and must be easily accessible at all times. If the power cord provided with your computer has a grounded plug, always use the power cord with a properly grounded AC outlet to avoid the risk of electric shock.

To reduce the possibility of an electric shock from the telephone network, plug your computer into the AC outlet before connecting it to the telephone line. Also, disconnect the telephone line before unplugging your computer from the AC power outlet.

Always disconnect the modem cord from the telephone system before installing or removing your computer cover.

Do not operate the computer with the cover removed.

For your safety, always unplug the computer from its power source and from any telecommunications systems (such as telephone lines), networks, or modems before performing any service procedures. Failure to do so may result in personal injury or equipment damage. Hazardous voltage levels are inside the power supply and modem of this product.

As a safety precaution, if the system power load exceeds the specific configuration's capacities, the system may temporarily disable some USB ports.

**WARNING!** To reduce the risk of fire, electric shock, and injury to persons when using this device, always follow basic safety precautions, including the following:

- Do not use this product near water—for example, near a bathtub, wash bowl, kitchen sink or laundry tub, in a wet basement, or near a swimming pool.
- Avoid using this product during an electrical storm. There is a remote risk of electric shock from lightning.
- Do not use this product to report a gas leak while in the vicinity of the leak.
- Always disconnect the modem cable before opening the equipment enclosure or touching an uninsulated modem cable, jack, or internal component.
- If this product was not provided with a telephone line cord, use only No. 26 AWG or larger telecommunication line cord.
- Do not plug a modem or telephone cable into the RJ-45 (network) jack.

SAVE THESE INSTRUCTIONS.

**IMPORTANT:** If your computer is provided with a voltage select switch for use in a 115 or 230 V power system, the voltage select switch has been pre-set to the correct voltage setting for use in the particular country/region where it was initially sold. Changing the voltage select switch to the incorrect position can damage your computer and void any implied warranty.

This product has not been evaluated for connection to an “IT” power system (an AC distribution system with no direct connection to earth, according to applicable safety standards).

## Heat-related safety warning notice

**WARNING!** To reduce the possibility of heat-related injuries or of overheating the mobile computer, do not place the mobile computer directly on your lap or obstruct the computer air vents. Use the mobile computer only on a hard, flat surface. Do not allow another hard surface, such as an adjoining optional printer, or a soft surface, such as pillows or rugs or clothing, to block airflow. Also, do not allow the AC adapter to contact the skin or a soft surface, such as pillows or rugs or clothing, during operation. The mobile computer and the AC adapter comply with the user-accessible surface temperature limits defined by applicable safety standards.

## Potential safety conditions notice

If you notice any of the following conditions (or if you have other safety concerns), do not use the computer: crackling, hissing, or popping sound, or a strong odor or smoke coming from the computer. It is normal for these conditions to appear when an internal electronic component fails in a safe and controlled manner. However, these conditions may also indicate a potential safety issue. Do not assume it is a safe failure. Turn off the computer, disconnect it from its power source, and contact technical support for assistance.

## Installation conditions

See installation instructions before connecting this equipment to the input supply.

**WARNING!** Energized and moving parts may be inside the computer. Disconnect power to the equipment before removing the enclosure. Replace and secure the enclosure before re-energizing the equipment.

## Acoustics notice

Sound pressure level (LpA) is far below 70dB(A) (operator position, normal operation, according to ISO 7779). To display product noise emission data, go to “IT ECO Declarations” at http://www.hp.com/go/ted, and then select a product category from the drop-down menu.

## Battery notices

**WARNING!** The product may contain an internal lithium manganese dioxide, vanadium pentoxide, or alkaline battery or battery pack. There is risk of fire and burns if the battery pack is not handled properly.

**WARNING!** Do not attempt to recharge the battery.

**WARNING!** Do not expose to temperatures higher than 60° C (140° F).

**WARNING!** To reduce potential safety issues, only the battery provided with the computer, a replacement battery provided by HP, or a compatible battery purchased as an accessory from HP should be used with the computer. Fast charging may not be available for non-compatible or non-HP batteries.

**WARNING!** To reduce the risk of fire or burns, do not disassemble, crush, puncture, short external contacts, or dispose of in fire or water.

**WARNING!** Risk of explosion if battery is replaced by an incorrect type. Dispose of used batteries according to the instructions.

**WARNING!** Replace only with the HP spare designated for this product.

⚠ **WARNING!** Do not ingest battery, a Chemical Burn Hazard.

⚠ **WARNING!** This product contains a coin/button cell battery. If the coin/button cell battery is swallowed, it can cause severe internal burns in just 2 hours and can lead to death.

⚠ **WARNING!** Keep new and used batteries away from children.

⚠ **WARNING!** If the battery compartment does not close securely, stop using the product and keep it away from children.

⚠ **WARNING!** If you think batteries might have been swallowed or placed inside any part of the body, seek immediate medical attention.

⚠ **WARNING!** Leaving a battery in an extremely high temperature surrounding environment can result in an explosion or the leakage of flammable liquid or gas.

⚠ **WARNING!** A battery subjected to extremely low air pressure may result in an explosion or the leakage of flammable liquid or gas.

| Icon | Description |
|---|---|
| | Batteries, battery packs, and accumulators should not be disposed of together with the general household waste. In order to forward them to recycling or proper disposal, please use the public collection system or return them to HP, an authorized HP partner, or their agents. |

# Fan notices

⚠ **WARNING!** Keep body parts away from moving parts.

⚠ **WARNING!** Keep body parts away from fan blades.

⚠ **WARNING!** Keep body parts out of the motion path.

# Headset and earphone volume level notice

⚠ **WARNING!** To prevent possible hearing damage, do not listen at high volume levels for long periods.

Adjustment of the volume control as well as the equalizer to other settings than the center position may increase the ear-/headphones output voltage and therefore the sound pressure level. The use of factors influencing the ear-/headphones output other than those specified by the manufacturer (e.g. operating system, equalizer software, firmware, driver) may increase the ear-/headphones output voltage and therefore the sound pressure level.

# Laser safety

**For products equipped with optical drives or fiber optic transceivers.**

This product may be provided with an optical storage device (i.e., CD or DVD drive) and/or fiber optic transceiver. These contain lasers and are classified as Class 1 Laser Products in accordance with the standard IEC/EN 60825-1 and comply with its requirements.

Each laser product complies with US FDA Regulations of 21 CFR 1040.10 and 1040.11 or complies with those regulations except for deviations pursuant to Laser Notice No. 50, dated June 24, 2007.

**WARNING!** Use of controls or adjustments or performance of procedures other than those specified herein or in the laser product's installation guide may result in hazardous radiation exposure. To reduce the risk of exposure to hazardous radiation:

- Do not try to open the module enclosure. There are no user-serviceable components inside.
- Do not operate controls, make adjustments, or perform procedures to the laser device other than those specified herein.
- Allow only HP Authorized Service technicians to repair the unit.

# Power supply and power cord set requirements

## Power supply class I grounding requirements

For protection from fault currents, the equipment shall be connected to a grounding terminal. Plug the system power cord into an AC outlet that provides a ground connection. Substitute cords may not provide adequate fault protection. Only use the power cord supplied with this product or an HP Inc. authorized replacement.

### Brazil notice

Este equipamento deve ser conectado obrigatoriamente em tomada de rede de energia elétrica que possua aterramento (três pinos), conforme a norma nbr abnt 5410,visando a segurança dos usuários contra choques elétricos.

### Denmark

Apparatets stikprop skal tilsluttes en stikkontakt med jord, som giver forbindelse til stikproppens jord.

### Finland

Laite on liitettävä suojakoskettimilla varustettuun pistorasiaan.

### Norway

Apparatet må tilkoples jordet stikkontakt.

### Sweden

Apparaten skall anslutas till jordat uttag.

## Power supply requirements

The power supplies on some products have external power switches. The voltage select switch feature on the product permits it to operate from any line voltage between 100-127 or 200-240 volts AC. Power supplies on those products that do not have external power switches are equipped with internal circuits that sense the incoming voltage and automatically switch to the proper voltage.

**WARNING!** To reduce potential safety issues, only the AC adapter provided with the computer, a replacement AC adapter provided by HP, or an AC adapter purchased as an accessory from HP should be used with the computer.

### For use in Norway

This product is also designed for an IT power system with phase-to-phase voltage 230V.

## Power cord set requirements

⚠ **WARNING!** To reduce the risk of electric shock or damage to the equipment:

- Plug the power cord into an AC outlet that is easily accessible at all times.
- Disconnect power from the computer by unplugging the power cord from the AC outlet.
- If provided with a 3-pin attachment plug on the power cord, plug the cord into a grounded (earthed) 3-pin outlet. Do not disable the power cord grounding pin, for example, by attaching a 2-pin adapter. The grounding pin is an important safety feature.

The power cord set received with the product meets the requirements for use in the country where the equipment was originally purchased. Use only the power cord provided with the unit or an authorized replacement power cord from HP Inc. or an approved HP Inc. source. Replacement part numbers may be found at http://www.hp.com/support.

Power cord sets for use in other countries must meet the requirements of the country where you use the product. For more information on power cord set requirements, contact your authorized HP dealer, reseller, or service provider.

⚠ **WARNING!** Do not use power cords from other products.

Mismatched power cords may result in a shock and fire hazard.

The requirements listed below are applicable to all countries:

1. The power cord must be approved by an acceptable accredited agency responsible for evaluation in the country where the power cord set will be installed.
2. The length of the power cord must be between 1.8 m (6 feet) and 3.6 m (12 feet). For a power cord 2.0 m (6.56 feet) or less, the diameter of the wire must be a minimum of 0.75 $mm^2$ or 18AWG. If the power cord is longer than 2.0 m (6.56 feet), the diameter of the wire must be a minimum of 1.0 $mm^2$ or 16AWG.

The power cord should be routed so that it is not likely to be walked on or pinched by items placed upon it or against it. Particular attention should be paid to the plug, electrical outlet, and the point where the cord exits from the product.

⚠ **WARNING!** Do not operate this product with a damaged power cord set. If the power cord set is damaged in any manner, replace it immediately. Damaged cords may result in user exposure to hazards.

## Power cord notice

If you were not provided with a power cord for the computer or for an external power accessory intended for use with the computer, you should purchase a power cord that is approved for use in your country or region.

The power cord must be rated for the product and for the voltage and current marked on the product's electrical ratings label. The voltage and current rating of the cord should be greater than the voltage and current rating marked on the product. In addition, the diameter of the wire must be a minimum of **0.75 $mm^2$**/18AWG, and the length of the cord must be between **1.0 m** (3.2 ft) and **2 m** (6.56 ft). If you have questions about the type of power cord to use, contact your authorized service provider.

A power cord should be routed so that it is not likely to be walked on or pinched by items placed upon it or against it. Particular attention should be paid to the plug, electrical outlet, and the point where the cord exits from the product.

### DC plug of external HP power supply

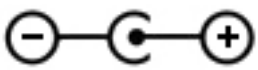

## Japan power cord notice

製品には、同梱された電源コードをお使い下さい。
同梱された電源コードは、他の製品では使用出来ません。

## Japan power cord requirements

For use in Japan, use only the power cord received with this product.

⚠ **CAUTION:** Do not use the power cord received with this product on any other products.

# Pinch hazard

⚠ **WARNING!** Observe pinch hazard areas. Keep fingers away from closing parts.

# TV antenna connectors protection

## External television antenna grounding

If an outside antenna or cable system is connected to the product, be sure the antenna or cable system is electrically grounded so as to provide some protection against voltage surges and built-up static charges. Article 810 of the National Electrical Code, ANSI/NFPA 70, provides information with regard to proper electrical grounding of the mast and supporting structure, grounding of the lead-in wire to an antenna-discharge unit, size of grounding conductors, location of antenna-discharge unit, connection to grounding electrodes, and requirements for the grounding electrode.

## Lightning protection

For added protection of any product during a lightning storm, or when it is left unattended and unused for long periods of time, unplug the product from the wall outlet and disconnect the antenna or cable system. This will prevent damage to the product from lightning and power line surges.

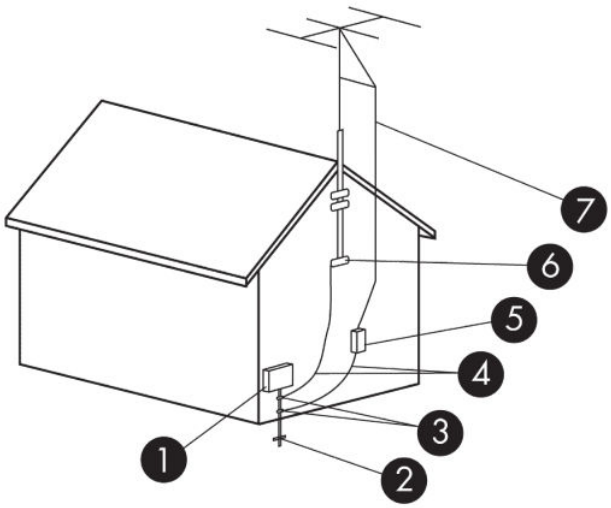


**Table 2-1 Antenna Grounding**

| Reference | Grounding Component |
|---|---|
| 1 | Electric Service Equipment |

**Table 2-1 Antenna Grounding (continued)**

| Reference | Grounding Component |
|---|---|
| 2 | Power Service Grounding Electrode System (NEC Art 250, Part III) |
| 3 | Ground Clamps |
| 4 | Grounding Conductors (NEC Section 810.21) |
| 5 | Antenna Discharge Unit (NEC Section 810.20) |
| 6 | Ground Clamp |
| 7 | Antenna Lead-in Wire |

## Note to CATV system installer

This reminder is provided to call the CATV systems installer's attention to section 820.93 of the National Electric Code, which provides guidelines for proper grounding and in particular, specify that the Coaxial cable shield shall be connected to grounding system of the building, as close to the point of cable entry as practical.

# Travel notice

⚠ **WARNING!** To reduce the risk of electric shock, fire, or damage to the equipment, do not attempt to power the computer with a voltage converter kit sold for appliances.

# China safety notices

## HP 工作站使用安全手册

### 使用须知

欢迎使用惠普工作站，为了您及仪器的安全，请您务必注意如下事项：

1. 仪器要和地线相接，要使用有正确接地插头的电源线，使用中国国家规定的 220V 电源。
2. 避免高温和尘土多的地方，否则易引起仪器内部部件的损坏。
3. 避免接近高温，避免接近直接热源，如直射太阳光、暖气等其它发热体。
4. 不要有异物或液体落入机内，以免部件短路。
5. 不要将磁体放置于仪器附近。

### *警告*

为防止火灾或触电事故，请不要将该机放置于淋雨或潮湿处

如果您按照以上步骤操作时遇到了困难，或想了解其它产品性能，请在以下网页上寻找相关信息：http://www.hp.com.cn

或联系我们

中国惠普有限公司
地址：北京朝阳区建国路 112 号中国惠普大厦
电话：010-65643888

## China: Altitude notice

海拔警告仅适用于在海拔 2000m 以下地区使用的产品

| Icon | Description |
|---|---|
| | 海拔警告仅适用于在海拔 2000m 以下地区使用的产品。 |

## China: Tropical warning notice

热带警告仅适用于在非热带气候条件下使用的产品。

| Icon | Description |
|---|---|
| | 热带警告仅适用于在非热带气候条件下使用的产品。 |

## Norway and Sweden: Cable grounding notice for products with a TV tuner

⚠ **CAUTION:** To reduce potential safety issues, use a galvanic isolator when connecting to a cable distribution system.

## 使用過度恐傷害視力

注意事項:

(1) 使用 30 分鐘請休息 10 分鐘。

(2) 未滿 2 歲幼兒不看螢幕，2 歲以上每天看螢幕不要超過 1 小時。

# 3 Environmental notices

This chapter provides country- and region-specific environmental notices and compliance information. Some of these notices may not apply to your product.

## Electronic hardware, packaging and battery recycling

HP encourages customers to recycle used electronic hardware, HP original print cartridges packaging, and rechargeable batteries. For more information about recycling programs, go to http://www.hp.com/recycle.

For information about recycling the product in Japan, refer to http://www.hp.com/jp/hardwarerecycle/.

## Disposal of waste equipment by users

| Icon | Description |
|---|---|
| | This symbol means do not dispose of your product with your other household waste. Instead, you should protect human health and the environment by handing over your waste equipment to a designated collection point for the recycling of waste electrical and electronic equipment. For more information, please contact your household waste disposal service or go to http://www.hp.com/recycle. |

## Brazil alkaline battery disposal

| Icon | Description |
|---|---|
| Não descarte o produto eletrônico em lixo comum | Este produto eletroeletrônico e seus componentes não daven ser descartados no lixo comum, pois embora estejam em conformidade com padrões mundiais de restrição a substâncias nocivas, podem conter, ainda que em quantidades mínimas, substâncias impactantes ao meio ambiente. Ao final da vida útil deste produto, o usuário deverá entregá-lo à HP. A não observância dessa orientação sujeitará o infrator às sanções previstas em lei. Após o uso, as pilhas e/ou baterias dos produtos HP deverão ser entregues ao estabelecimento comercial ou rede de assistência técnica autorizada pela HP.<br><br>Para maiores informações , inclusive sobre os pontos de recebimento, acesse: http://www.hp.com.br/reciclar |

## Brazil hardware recycling information

| Icon | Description |
|---|---|
| Não descarte o produto eletrônico em lixo comum | Este produto eletroeletrônico e seus componentes não daven ser descartados no lixo comum, pois embora estejam em conformidade com padrões mundiais de restrição a substâncias nocivas, podem conter, ainda que em quantidades mínimas, substâncias impactantes ao meio ambiente. Ao final da vida útil deste produto, o usuário deverá entregá-lo à HP. A não observância dessa orientação sujeitará o infrator às sanções previstas em lei. Após o uso, as pilhas e/ou baterias dos produtos HP deverão ser entregues ao estabelecimento comercial ou rede de assistência técnica autorizada pela HP.<br><br>Para maiores informações , inclusive sobre os pontos de recebimento, acesse: http://www.hp.com.br/reciclar |

# Taiwan battery recycling information

| Icon | Description |
|---|---|
| 廢電池請回收 | The Taiwan EPA requires dry battery manufacturing or importing firms, in accordance with Article 15 of the Waste Disposal Act, to indicate the recovery marks on the batteries used in sales, giveaways, or promotions. Contact a qualified Taiwanese recycler for proper battery disposal. |

# ENERGY STAR® Certification (select products only)

ENERGY STAR is a U.S. Environmental Protection Agency voluntary program that helps businesses and individuals save money and protect our climate through superior energy efficiency. Products that earn the ENERGY STAR prevent greenhouse gas emissions by meeting strict energy efficiency criteria or requirements set by the U.S. Environmental Protection Agency. As an ENERGY STAR Partner, HP Inc. has followed the U.S. EPA's enhanced product certification process to ensure that products marked with the ENERGY STAR logo are ENERGY STAR certified per the applicable ENERGY STAR guidelines.  The following logo appears on all ENERGY STAR-certified computers:

A key ENERGY STAR requirement for computer products is power management features that significantly reduce energy consumption when the product is not in use. Power management allows a computer to automatically enter a low power "sleep" mode, or other low power mode, after a defined period of inactivity. The power management features have been preset as follows when the computer is operating on AC power:

| Computer type | Time to activate display sleep mode | Time to activate computer sleep mode (minutes) | Resuming from sleep mode |
|---|---|---|---|
| **Notebooks, Mobile Workstations** | Less than or equal to 15 minutes (varies by model) | Less than or equal to 30 minutes (varies by model) | Product will exit sleep mode when the power/sleep button is pressed.<br>If Wake-on-Lan (WOL) is enabled, the system can resume from sleep in response to a network signal. |
| **Tablets/Slates** | Less than or equal to 1 minute | Not applicable | Not applicable |
| **Desktops, Integrated Desktops, Workstations** | Less than or equal to 15 minutes (varies by model) | Less than or equal to 30 minutes (varies by model) | Product will exit sleep mode when user interacts with any input device, including the mouse or keyboard.<br>If Wake-on-Lan (WOL) is enabled, the system can resume from sleep in response to a network signal. |
| **Thin clients** | Less than or equal to 15 minutes (varies by model) | Less than or equal to 30 minutes when sleep mode is supported by the operating system (varies by model) | When sleep mode is supported by operating system product will exit sleep mode when user interacts with any input device, including the mouse or keyboard. |

| Computer type | Time to activate display sleep mode | Time to activate computer sleep mode (minutes) | Resuming from sleep mode |
|---|---|---|---|
| | | | If Wake-on-Lan (WOL) is enabled, the system can resume from sleep in response to a network signal. |

For computers that support an always-on, always-connected use profile where internet access is available (such as tablets and slates), alternative low power modes - such as Short or Long Idle modes (as defined in the ENERGY STAR Computer Program Requirements) are provided that consume very little power (</= 10 Watts) and when applicable, maximize product battery life. These alternative low power modes are dynamic, with the display sleep mode activated within 1 minute of user inactivity.

The computer exits Sleep when the power/Sleep button is pressed. When the Wake On LAN (WOL) feature is enabled, the computer can also exit Sleep in response to a network signal.

Additional information on the potential energy and financial savings of the power management feature can be found on the EPA ENERGY STAR Power Management website at http://www.energystar.gov/powermanagement.

Additional information on the ENERGY STAR program and its environmental benefits are available on the EPA ENERGY STAR website at http://www.energystar.gov.

ENERGY STAR and the ENERGY STAR mark are registered trademarks owned by the U.S. Environmental Protection Agency.

# Chemical substances

HP is committed to providing our customers with information about the chemical substances in our products as needed to comply with legal requirements such as REACH (Regulation EC No. 1907/2006 of the European Parliament and the Council). A chemical information report for this product can be found at http://www.hp.com/go/reach.

# Mercury statement

This statement applies to all-in-one computers with built-in display panels that do not use LED backlighting.

This HP product may contain the following material that might require special handling at end-of-life:

- Mercury in the fluorescent lamp in the display LCD

Disposal of mercury can be regulated because of environmental considerations. For disposal or recycling information, please contact your local authorities or the Electronic Industries Alliance (EIA) (http://www.eiae.org).

# Perchlorate material–special handling may apply

The computer's real-time clock battery may contain perchlorate and may require special handling when recycled or disposed of in California. See http://www.dtsc.ca.gov/hazardouswaste/perchlorate/.

# China environmental notices

回收信息说明

惠普公司对废弃的电子计算机（笔记本电脑）提供回收服务，更多信息请登陆

http://www8.hp.com/us/en/hp-information/environment/product-recycling.html

# China PC energy label

In accordance with “The Regulation of the Implementation on China Energy Label for Microcomputers”, this microcomputer has an Energy Efficiency Label. The energy efficiency grade, TEC (Typical Energy Consumption), and product category presented on the label are determined and calculated according to the standard GB28380-2012.

1. Energy Efficiency Grades

   The grade is determined by the standard with the calculation of base consumption level with the sum of all the allowances for additional components such as main memory and graphics card. For products of any grade, the TEC should not exceed the value specified in the following table:

| Product Type | | TEC (kilowatt hour) | | |
|---|---|---|---|---|
| | | Grade 1 | Grade 2 | Grade 3 |
| Desktop microcomputer, AIO | Category A | 98.0+∑Efa | 148.0+∑Efa | 198.0+∑Efa |
| | Category B | 125.0+∑Efa | 175.0+∑Efa | 225.0+∑Efa |
| | Category C | 159.0+∑Efa | 209.0+∑Efa | 259.0+∑Efa |
| | Category D | 184.0+∑Efa | 234.0+∑Efa | 284.0+∑Efa |
| Portable Computer | Category A | 20.0+∑Efa | 35.0+∑Efa | 45.0+∑Efa |
| | Category B | 26.0+∑Efa | 45.0+∑Efa | 65.0+∑Efa |
| | Category C | 54.5+∑Efa | 75.0+∑Efa | 123.5+∑Efa |

**NOTE:** ∑Efa is the sum of power factor of product additional functions.

2. Typical Energy Consumption

   The energy consumption figure presented on the label is the data measured with the representative configuration that covers all the configurations in the registration unit which is selected according to “The Regulation of the Implementation on China Energy Label for Microcomputers". Thus, actual energy consumption of this specific microcomputer may not be the same as the TEC data presented in the label.

3. Product Category

   The product category is determined by the standard according to the microcomputer’s configuration. The categorization of products complies with the regulations in the following table:

| Product Type | Configuration Description | |
|---|---|---|
| | Desktop microcomputer, AIO | Portable Computer |

| Product Type | Configuration Description | |
|---|---|---|
| Category A | The desktop microcomputer and AIO whose configuration is out of the scope of Category B, C, and D | The portable computer whose configuration is out of the scope of Category B and C |
| Category B | CPU physical core number of 2, and system memory of not less than 2 GB | A Discrete GPU |
| Category C | CPU physical core number of over 2, with at least one of the following features:<br>**1.** System memory of not less than 2 GB<br>**2.** A Discrete GPU | The product that has a CPU physical core number of not less than 2, system memory of not less than 2GB, A Discrete GPU with Frame Buffer Width not less than 128-bit. |
| Category D | CPU physical core number of not less than 4, with at least one of the following features:<br>**1.** System memory of not less than 4 GB<br>**2.** A Discrete GPU with Frame Buffer Width not less than 128-bit | |

For more details on the specification, please refer to the standard GB28380-2012.

本机根据《微型计算机能源效率标识实施规则》的要求加施中国能效标识。能效标识中显示的能效等级、典型能源消耗和产品类型均根据《微型计算机能效限定值及能效等级》（GB28380-2012）的要求确定。对上述标识内容的说明如下：

1. 能效等级

微型计算机的能效等级由基础能源消耗值和附加功能功耗因子之和决定。微型计算机能效各等级的典型能源消耗应不大于下表的规定

| 微型计算机类型 | | | 能源消耗（千瓦时） | | |
|---|---|---|---|---|---|
| | | | 1 | 2 | 3 |
| | 台式微型计算机及 | A 类 | 98.0+∑Efa | 148.0+∑Efa | 198.0+∑Efa |
| 一体机 | | B 类 | 125.0+∑Efa | 175.0+∑Efa | 225.0+∑Efa |
| | | C 类 | 159.0+∑Efa | 209.0+∑Efa | 259.0+∑Efa |
| | | D 类 | 184.0+∑Efa | 234.0+∑Efa | 284.0+∑Efa |
| | 便携式 | A 类 | 20.0+∑Efa | 35.0+∑Efa | 45.0+∑Efa |
| 计算机 | | B 类 | 26.0+∑Efa | 45.0+∑Efa | 65.0+∑Efa |
| | | C 类 | 54.5+∑Efa | 75.0+∑Efa | 123.5+∑Efa |
| 注：ΣEfa 为微型计算机附加功能功耗因子之和 | | | | | |

2. 典型能源消耗

典型能源消耗值代表一个备案单元中，符合《微型计算机能源效率标识实施规则》要求的代表性规格型号产品的数值。因此，本机的典型能源消耗值可能与其所加施的能效标识中所示的典型能源消耗值不一致。

3. 产品类型

产品类型根据微型计算机的配置确定。参见下表：

| 类型 | 配置说明 | |
|---|---|---|
| | 台式微型计算机及一体机 | 便携式计算机 |
| A 类 | 下列 B 类、C 类、D 类配置以外的台式微型计算机及一体机 | 下列 B 类、C 类配置以外的便携式计算机 |
| B 类 | 中央处理器（CPU）物理核心数为 2，系统内存大于等于 2GB | 具有独立图形显示单元（GPU） |
| C 类 | 中央处理器（CPU）物理核心数大于 2，且至少具有以下特征中的一条<br>a. a）系统内存大于等于 2GB；<br>b. 独立图形显示单元（GPU） | 中央处理器（CPU）物理核心数大于等于 2，系统内存大于等于 2GB，具有独立图形显示单元（GPU）且显存位宽大于等于 128 位. |
| D 类 | 中央处理器（CPU）物理核心数大于等于 4，且至少具有以下特征中的一条：<br>a. 系统内存大于等于 4GB；<br>b. 具有独立图形显示单元（GPU）且显存位宽大于等于 128 位 | |

关于标识内容的更详细技术信息，请参考《微型计算机能效限定值及能效等级》（GB28380-2012）

# China restriction of hazardous substances (RoHS) for notebook and tablet computers

## The Table of Hazardous Substances/Elements and their Content

As required by China's Management Methods for Restricted Use of Hazardous Substances in Electrical and Electronic Products

| | Hazardous Substances | | | | | |
|---|---|---|---|---|---|---|
| **Part Name** | **Lead (Pb)** | **Mercury (Hg)** | **Cadmium (Cd)** | **Hexavalent Chromium (Cr(VI))** | **Polybrominated biphenyls (PBB)** | **Polybrominated diphenyl ethers (PBDE)** |
| Battery | X | 0 | 0 | 0 | 0 | 0 |
| Cables | X | 0 | 0 | 0 | 0 | 0 |
| Camera | X | 0 | 0 | 0 | 0 | 0 |
| Chassis/Other | X | 0 | 0 | 0 | 0 | 0 |
| Flash memory card reader | X | 0 | 0 | 0 | 0 | 0 |
| Floppy disk drive | X | 0 | 0 | 0 | 0 | 0 |
| Hard disk drive | X | 0 | 0 | 0 | 0 | 0 |
| Headphones | X | 0 | 0 | 0 | 0 | 0 |
| I/O PCAs | X | 0 | 0 | 0 | 0 | 0 |
| Keyboard | X | 0 | 0 | 0 | 0 | 0 |
| Liquid crystal display (LCD) panel | X | 0 | 0 | 0 | 0 | 0 |
| Media (CD/DVD/floppy) | 0 | 0 | 0 | 0 | 0 | 0 |
| Memory | X | 0 | 0 | 0 | 0 | 0 |
| Motherboard, processor, heat sinks | X | 0 | 0 | 0 | 0 | 0 |
| Mouse | X | 0 | 0 | 0 | 0 | 0 |
| Optical disk drive | X | 0 | 0 | 0 | 0 | 0 |
| Optional docking device | X | 0 | 0 | 0 | 0 | 0 |
| Power adapter | X | 0 | 0 | 0 | 0 | 0 |
| Power pack | X | 0 | 0 | 0 | 0 | 0 |
| Power supply | X | 0 | 0 | 0 | 0 | 0 |
| Remote control | X | 0 | 0 | 0 | 0 | 0 |
| Smart card/Java™ card reader | X | 0 | 0 | 0 | 0 | 0 |
| Speakers, external | X | 0 | 0 | 0 | 0 | 0 |

| | Hazardous Substances | | | | | |
|---|---|---|---|---|---|---|
| **Part Name** | **Lead (Pb)** | **Mercury (Hg)** | **Cadmium (Cd)** | **Hexavalent Chromium (Cr(VI))** | **Polybrominated biphenyls (PBB)** | **Polybrominated diphenyl ethers (PBDE)** |
| TV tuner | X | 0 | 0 | 0 | 0 | 0 |
| USB flash memory drive | X | 0 | 0 | 0 | 0 | 0 |
| USB hub | X | 0 | 0 | 0 | 0 | 0 |
| Web camera | X | 0 | 0 | 0 | 0 | 0 |
| Wireless receiver | X | 0 | 0 | 0 | 0 | 0 |
| Wireless cards | X | 0 | 0 | 0 | 0 | 0 |

This form has been prepared in compliance with the provisions of SJ/T 11364.

0: Indicates that the content of said hazardous substance in all of the homogenous materials in the component is within the limits required by GB/T 26572.

X: Indicates that the content of said hazardous substance exceeds the limits required by GB/T 26572 in at least one homogenous material in the component.

All parts named in this table with an “X” are in compliance with the European Union’s RoHS Legislation.

**NOTE:** The referenced Environmental Protection Use Period Marking was determined according to normal operating use conditions of the product such as temperature and humidity.

# 笔记本电脑和平板电脑产品中有害物质或元素的名称及含量

根据中国《电器电子产品有害物质限制使用管理办法》

| | 有害物质 | | | | | |
|---|---|---|---|---|---|---|
| **部件名称** | **铅 (Pb)** | **汞 (Hg)** | **镉 (Cd)** | **六价铬 (Cr(VI))** | **多溴联苯 (PBB)** | **多溴二苯醚 (PBDE)** |
| 电池 | X | 0 | 0 | 0 | 0 | 0 |
| 线缆 | X | 0 | 0 | 0 | 0 | 0 |
| 摄像头 | X | 0 | 0 | 0 | 0 | 0 |
| 机箱/其他 | X | 0 | 0 | 0 | 0 | 0 |
| 闪存读卡器 | X | 0 | 0 | 0 | 0 | 0 |
| 软盘驱动器 | X | 0 | 0 | 0 | 0 | 0 |
| 硬盘驱动器 | X | 0 | 0 | 0 | 0 | 0 |
| 耳机 | X | 0 | 0 | 0 | 0 | 0 |
| I/O PCA | X | 0 | 0 | 0 | 0 | 0 |
| 键盘 | X | 0 | 0 | 0 | 0 | 0 |
| 液晶显示器 (LCD) 面板 | X | 0 | 0 | 0 | 0 | 0 |
| 介质（CD/DVD/软盘） | 0 | 0 | 0 | 0 | 0 | 0 |

| | 有害物质 | | | | | |
|---|---|---|---|---|---|---|
| 部件名称 | 铅 (Pb) | 汞 (Hg) | 镉 (Cd) | 六价铬 (Cr(VI)) | 多溴联苯 (PBB) | 多溴二苯醚 (PBDE) |
| 内存 | X | 0 | 0 | 0 | 0 | 0 |
| 主板、处理器、散热器 | X | 0 | 0 | 0 | 0 | 0 |
| 鼠标 | X | 0 | 0 | 0 | 0 | 0 |
| 光盘驱动器 | X | 0 | 0 | 0 | 0 | 0 |
| 对接设备选件 | X | 0 | 0 | 0 | 0 | 0 |
| 电源适配器 | X | 0 | 0 | 0 | 0 | 0 |
| 电源 | X | 0 | 0 | 0 | 0 | 0 |
| 电源组 | X | 0 | 0 | 0 | 0 | 0 |
| 投影仪 | X | 0 | 0 | 0 | 0 | 0 |
| 遥控器 | X | 0 | 0 | 0 | 0 | 0 |
| 智能卡/Java™ 读卡器 | X | 0 | 0 | 0 | 0 | 0 |
| 扬声器（外置） | X | 0 | 0 | 0 | 0 | 0 |
| 电视调谐器 | X | 0 | 0 | 0 | 0 | 0 |
| USB 闪存驱动器 | X | 0 | 0 | 0 | 0 | 0 |
| USB 集线器 | X | 0 | 0 | 0 | 0 | 0 |
| 网络摄像头 | X | 0 | 0 | 0 | 0 | 0 |
| 无线接收器 | X | 0 | 0 | 0 | 0 | 0 |
| 无线网卡 | X | 0 | 0 | 0 | 0 | 0 |
| 本表格依据 SJ/T 11364 的规定编制。<br>0：表示该有害物质在该部件所有均质材料中的含量均在 GB/T 26572 规定的限量要求以下。<br>X：表示该有害物质至少在该部件的某一均质材料中的含量超出 GB/T 26572 规定的限量要求。<br>注：环保使用期限的参考标识取决于产品正常工作的温度和湿度等条件 | | | | | | |

# China restriction of hazard substances (ROHS) for desktops, thin clients, personal workstations, all-in-ones, and point-of-sale terminals

## The Table of Hazardous Substances/Elements and their Content

As required by China's Management Methods for Restricted Use of Hazardous Substances in Electrical and Electronic Products

| | Hazardous Substances | | | | | |
|---|---|---|---|---|---|---|
| **Part Name** | **Lead (Pb)** | **Mercury (Hg)** | **Cadmium (Cd)** | **Hexavalent Chromium (Cr(VI))** | **Polybrominated biphenyls (PBB)** | **Polybrominated diphenyl ethers (PBDE)** |
| Battery | X | 0 | 0 | 0 | 0 | 0 |
| Cables | X | 0 | 0 | 0 | 0 | 0 |
| Camera | X | 0 | 0 | 0 | 0 | 0 |
| Chassis/Other | X | 0 | 0 | 0 | 0 | 0 |
| Fan | X | 0 | 0 | 0 | 0 | 0 |
| Flash memory card reader | X | 0 | 0 | 0 | 0 | 0 |
| Floppy disk drive | X | 0 | 0 | 0 | 0 | 0 |
| Hard disk drive | X | 0 | 0 | 0 | 0 | 0 |
| Headphones | X | 0 | 0 | 0 | 0 | 0 |
| Heat sink | X | 0 | 0 | 0 | 0 | 0 |
| I/O PCAs | X | 0 | 0 | 0 | 0 | 0 |
| Keyboard | X | 0 | 0 | 0 | 0 | 0 |
| Liquid crystal display (LCD) panel | X | 0 | 0 | 0 | 0 | 0 |
| Media (CD/DVD/floppy) | 0 | 0 | 0 | 0 | 0 | 0 |
| Memory | X | 0 | 0 | 0 | 0 | 0 |
| Motherboard, processor, heat sinks | X | 0 | 0 | 0 | 0 | 0 |
| Mouse | X | 0 | 0 | 0 | 0 | 0 |
| Optical disk drive | X | 0 | 0 | 0 | 0 | 0 |
| Optional docking device | X | 0 | 0 | 0 | 0 | 0 |
| Power adapter | X | 0 | 0 | 0 | 0 | 0 |
| Power supply | X | 0 | 0 | 0 | 0 | 0 |
| Projector | X | 0 | 0 | 0 | 0 | 0 |
| Remote control | X | 0 | 0 | 0 | 0 | 0 |
| Smart card/Java™ card reader | X | 0 | 0 | 0 | 0 | 0 |
| Solid-state drives | X | 0 | 0 | 0 | 0 | 0 |
| Speakers, external | X | 0 | 0 | 0 | 0 | 0 |
| Stylus | X | 0 | 0 | 0 | 0 | 0 |
| Touch mat | X | 0 | 0 | 0 | 0 | 0 |
| TV tuner | X | 0 | 0 | 0 | 0 | 0 |
| USB flash memory drive | X | 0 | 0 | 0 | 0 | 0 |

| | Hazardous Substances | | | | | |
|---|---|---|---|---|---|---|
| **Part Name** | **Lead (Pb)** | **Mercury (Hg)** | **Cadmium (Cd)** | **Hexavalent Chromium (Cr(VI))** | **Polybrominated biphenyls (PBB)** | **Polybrominated diphenyl ethers (PBDE)** |
| USB hub | X | 0 | 0 | 0 | 0 | 0 |
| Web camera | X | 0 | 0 | 0 | 0 | 0 |
| Wireless receiver | X | 0 | 0 | 0 | 0 | 0 |
| Wireless cards | X | 0 | 0 | 0 | 0 | 0 |
| 3D Capture Stage/ Turntable | X | 0 | 0 | 0 | 0 | 0 |

This form has been prepared in compliance with the provisions of SJ/T 11364.

0: Indicates that the content of said hazardous substance in all of the homogenous materials in the component is within the limits required by GB/T 26572.

X: Indicates that the content of said hazardous substance exceeds the limits required by GB/T 26572 in at least one homogenous material in the component.

All parts named in this table with an “X” are in compliance with the European Union’s RoHS Legislation.

**NOTE:** The referenced Environmental Protection Use Period Marking was determined according to normal operating use conditions of the product such as temperature and humidity.

# 台式机、瘦客户端、个人工作站、一体机和销售点终端产品中有害物质或元素的名称及含量 (ROHS)

根据中国《电器电子产品有害物质限制使用管理办法》

| | 有害物质 | | | | | |
|---|---|---|---|---|---|---|
| **部件名称** | **铅 (Pb)** | **汞 (Hg)** | **镉 (Cd)** | **六价铬 (Cr(VI))** | **多溴联苯 (PBB)** | **多溴二苯醚 (PBDE)** |
| 电池 | X | 0 | 0 | 0 | 0 | 0 |
| 线缆 | X | 0 | 0 | 0 | 0 | 0 |
| 摄像头 | X | 0 | 0 | 0 | 0 | 0 |
| 机箱/其他 | X | 0 | 0 | 0 | 0 | 0 |
| 风扇 | X | 0 | 0 | 0 | 0 | 0 |
| 闪存读卡器 | X | 0 | 0 | 0 | 0 | 0 |
| 软盘驱动器 | X | 0 | 0 | 0 | 0 | 0 |
| 硬盘驱动器 | X | 0 | 0 | 0 | 0 | 0 |
| 耳机 | X | 0 | 0 | 0 | 0 | 0 |
| 散热器 | X | 0 | 0 | 0 | 0 | 0 |
| I/O PCA | X | 0 | 0 | 0 | 0 | 0 |

| | 有害物质 | | | | | |
|---|---|---|---|---|---|---|
| 部件名称 | 铅 (Pb) | 汞 (Hg) | 镉 (Cd) | 六价铬 (Cr(VI)) | 多溴联苯 (PBB) | 多溴二苯醚 (PBDE) |
| 键盘 | X | 0 | 0 | 0 | 0 | 0 |
| 液晶显示器 (LCD) 面板 | X | 0 | 0 | 0 | 0 | 0 |
| 介质（CD/DVD/软盘） | 0 | 0 | 0 | 0 | 0 | 0 |
| 内存 | X | 0 | 0 | 0 | 0 | 0 |
| 主板、处理器、散热器 | X | 0 | 0 | 0 | 0 | 0 |
| 鼠标 | X | 0 | 0 | 0 | 0 | 0 |
| 光驱 | X | 0 | 0 | 0 | 0 | 0 |
| 对接设备选件 | X | 0 | 0 | 0 | 0 | 0 |
| 电源适配器 | X | 0 | 0 | 0 | 0 | 0 |
| 电源 | X | 0 | 0 | 0 | 0 | 0 |
| 投影仪 | X | 0 | 0 | 0 | 0 | 0 |
| 遥控器 | X | 0 | 0 | 0 | 0 | 0 |
| 智能卡/Java™ 读卡器 | X | 0 | 0 | 0 | 0 | 0 |
| 固态驱动器 | X | 0 | 0 | 0 | 0 | 0 |
| 扬声器（外置） | X | 0 | 0 | 0 | 0 | 0 |
| 触控笔 | X | 0 | 0 | 0 | 0 | 0 |
| 触控板 | X | 0 | 0 | 0 | 0 | 0 |
| 电视调谐器 | X | 0 | 0 | 0 | 0 | 0 |
| USB 闪存驱动器 | X | 0 | 0 | 0 | 0 | 0 |
| USB 集线器 | X | 0 | 0 | 0 | 0 | 0 |
| 网络摄像头 | X | 0 | 0 | 0 | 0 | 0 |
| 无线接收器 | X | 0 | 0 | 0 | 0 | 0 |
| 无线网卡 | X | 0 | 0 | 0 | 0 | 0 |
| 3D 捕获台/转盘 | X | 0 | 0 | 0 | 0 | 0 |

本表格依据 SJ/T 11364 的规定编制。

0：表示该有害物质在该部件所有均质材料中的含量均在 GB/T 26572 规定的限量要求以下。

X：表示该有害物质至少在该部件的某一均质材料中的含量超出 GB/T 26572 规定的限量要求。

注：环保使用期限的参考标识取决于产品正常工作的温度和湿度等条件

# 台灣針對筆記型電腦和平板電腦的有害物質限制使用管理辦法 (RoHS)

## 限用物質含有情況標示聲明書

**Declaration of the Presence Condition of the Restricted Substances Marking**

| 限用物質及其化學符號<br>Restricted substances and its chemical symbols | | | | | | |
|---|---|---|---|---|---|---|
| **單元 Unit** | **鉛 Lead (Pb)** | **汞 Mercury (Hg)** | **鎘 Cadmium (Cd)** | **六價鉻 Hexavalent chromium** ($Cr^{+6}$) | **多溴聯苯 Polybrominated biphenyls (PBB)** | **多溴二苯醚 Polybrominated diphenyl ethers (PBDE)** |
| 纜線 Cables | — | O | O | O | O | O |
| 機殼/其他 Chassis/Other | — | O | O | O | O | O |
| 輸入/輸出印刷電路組件 I/O PCAs | — | O | O | O | O | O |
| 液晶顯示器 (LCD) 面板 Liquid crystal display (LCD) panel | — | O | O | O | O | O |
| 記憶體 Memory | O | O | O | O | O | O |
| 主機板、處理器、散熱器 Motherboard, processor, heat sinks | — | O | O | O | O | O |
| 電源組 Power pack | — | O | O | O | O | O |
| 電源供應器 Power supply | — | O | O | O | O | O |
| 儲存裝置 Storage Devices | — | O | O | O | O | O |
| 無線裝置 Wireless Devices | — | O | O | O | O | O |

備考 1： 「超出 0.1 %」及「超出 0.01 %」係指限用物質之百分比含量超出百分比含量基準值。

Note 1: "Exceeding 0.1 wt %" and "exceeding 0.01 wt %" indicate that the percentage content of the restricted substance exceeds the reference percentage value of presence condition.

備考 2： 「O」係指該項限用物質之百分比含量未超出百分比含量基準值。

Note 2: "O" indicates that the percentage content of the restricted substance does not exceed the percentage of reference value of presence.

備考 3： 「—」係指該項限用物質為排除項目。

Note 3: The "—" indicates that the restricted substance corresponds to the exemption.

若要取得最新版使用指南，請前往 http://www.hp.com/support，並依照指示尋找您的產品。然後選取「使用指南」。

To access the latest user guides, go to http://www.hp.com/support, and follow the instructions to find your product. Then select **User Guides**.

# 台灣針對桌上型電腦、精簡型電腦、個人工作站、一體成形電腦及銷售點終端機的有害物質限制使用管理辦法 (RoHS)

## 限用物質含有情況標示聲明書

**Declaration of the Presence Condition of the Restricted Substances Marking**

| 限用物質及其化學符號 | | | | | | |
|---|---|---|---|---|---|---|
| **Restricted substances and its chemical symbols** | | | | | | |
| **單元 Unit** | **鉛 Lead (Pb)** | **汞 Mercury (Hg)** | **鎘 Cadmium (Cd)** | **六價鉻 Hexavalent chromium ($Cr^{+6}$)** | **多溴聯苯 Polybrominated biphenyls (PBB)** | **多溴二苯醚 Polybrominated diphenyl ethers (PBDE)** |
| 纜線 Cables | — | O | O | O | O | O |
| 機座/其他 Chassis/Other | — | O | O | O | O | O |
| 輸入/輸出印刷電路組件 I/O PCAs | — | O | O | O | O | O |
| 液晶顯示器 (LCD) 面板 Liquid crystal display (LCD) panel (for AIO only) | — | O | O | O | O | O |
| 記憶體 Memory | O | O | O | O | O | O |
| 主機板、處理器、散熱器 Motherboard, processor, heat sinks | — | O | O | O | O | O |
| 電源供應器 Power supply | — | O | O | O | O | O |
| 儲存裝置 Storage Devices | — | O | O | O | O | O |
| 備考 1：「超出 0.1 %」及「超出 0.01 %」係指限用物質之百分比含量超出百分比含量基準值。<br>Note 1: "Exceeding 0.1 wt %" and "exceeding 0.01 wt %" indicate that the percentage content of the restricted substance exceeds the reference percentage value of presence condition.<br>備考 2：「O」係指該項限用物質之百分比含量未超出百分比含量基準值。<br>Note 2: "O" indicates that the percentage content of the restricted substance does not exceed the percentage of reference value of presence.<br>備考 3：「—」係指該項限用物質為排除項目。<br>Note 3: The "—" indicates that the restricted substance corresponds to the exemption. | | | | | | |

若要取得最新版使用指南，請前往 http://www.hp.com/support，並依照指示尋找您的產品。然後選取「使用指南」。

To access the latest user guides, go to http://www.hp.com/support, and follow the instructions to find your product. Then select **User Guides**.

# India restriction of hazardous substances (RoHS)

This product, as well as its related consumables and spares, complies with the reduction in hazardous substances provisions of the "India E-waste Rule 2016." It does not contain lead, mercury, hexavalent chromium, polybrominated biphenyls or polybrominated diphenyl ethers in concentrations exceeding 0.1 weight % and 0.01 weight % for cadmium, except where allowed pursuant to the exemptions set in Schedule 2 of the Rule.

# Information for European Union Commission Regulation 1275/2008

To locate product power consumption data, including when the product is in networked standby with all wired network ports connected and wireless devices connected, refer to section P14 “Additional information” of the product IT ECO Declaration at http://www.hp.com/hpinfo/globalcitizenship/environment/productdata/itecodesktop-pc.html.

Where applicable, activate and deactivate a wireless network using the instructions included in the product user guide or the operating system. Information is also available at http://www.hp.com/support.

# IT ECO declarations

Notebook or tablet PCs

http://www.hp.com/hpinfo/globalcitizenship/environment/productdata/iteconotebook-o.html

Desktop PCs and Thin Clients

http://www.hp.com/hpinfo/globalcitizenship/environment/productdata/itecodesktop-pc.html?jumpid=reg_R1002_USEN

Workstations

http://www.hp.com/hpinfo/globalcitizenship/environment/productdata/itecoworkstatio.html

# Japan restriction of hazardous substances (RoHS)

2008 年、日本における製品含有表示方法、JISC0950 が公示されました。製造事業者は、2006 年 7 月 1 日 以降に販売される電気・電子機器の特定化学物質の含有に付きまして情報提供を義務付けられました。製品の部材表示に付きましては、

http://www.hp.com/go/jisc0950

を参照してください

A Japanese regulatory requirement, defined by specification JIS C 0950, 2008, mandates that manufacturers provide Material Content Declarations for certain categories of electronic products offered for sale after July 1, 2006.

To view the JIS C 0950 material declaration for this product, visit http://www.hp.com/go/jisc0950.

# Ley para el Aprovechamiento Sustentable de la Energía de México

**Ley para el Aprovechamiento Sustentable de la Energía de México**

Se ha etiquetado este producto en conformidad con la Ley para el Aprovechamiento Sustentable de la Energía de México, que requiere la divulgación del consumo de energía del modo de uso normal (modo inactivo) y del modo de espera. Su producto es una de las muchas configuraciones de esta familia de modelos; el consumo de energía del modo inactivo de su configuración específica puede diferir de la información de la etiqueta. El consumo real de energía de su producto puede ser mayor o menor que el valor informado en la etiqueta de energía de producto para México a causa de factores como la configuración (componentes y módulos seleccionados) y el uso (tareas que se están efectuando, software instalado y en ejecución, etc.).

**NOTE:** Esta ley no es aplicable a las estaciones de trabajo.

# Turkey WEEE regulation

Türkiye Cumhuriyeti: AEEE Yönetmeliğine Uygundur

# TCO Certified

This section applies only to products bearing the TCO Certified logo.

A third-party certification according to ISO 14024

Toward sustainable IT products

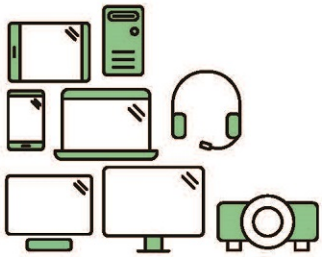

## Say hello to a more sustainable product

IT products are associated with a wide range of sustainability risks throughout their life cycle. Human rights violations are common in the factories. Harmful substances are used both in products and their manufacture. Products can often have a short lifespan because of poor ergonomics, low quality and when they are not able to be repaired or upgraded.

**This product is a better choice**. It meets all the criteria in TCO Certified, the world's most comprehensive sustainability certification for IT products. Thank you for making a responsible product choice, that help drive progress towards a more sustainable future!

Criteria in TCO Certified have a life-cycle perspective and balance environmental and social responsibility. Conformity is verified by independent and approved verifiers that specialize in IT products, social responsibility or other sustainability issues. Verification is done both before and after the certificate is issued, covering the entire validity period. The process also includes ensuring that corrective actions are implemented in all cases of factory non-conformities. And last but not least, to make sure that the certification and independent verification is accurate, both TCO Certified and the verifiers are reviewed regularly.

### Want to know more?

Read information about TCO Certified, full criteria documents, news and updates at **tcocertified.com.** On the website you'll also find our Product Finder, which presents a complete, searchable listing of certified products.

# TCO Certified Edge

This section applies only to products bearing the TCO Certified Edge logo.

A third-party certification according to ISO 14024

Toward sustainable IT products

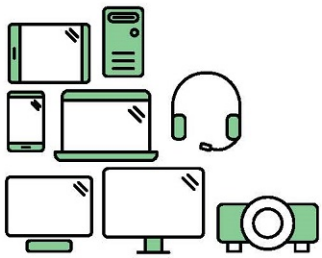

## Say hello to a more sustainable product

IT products are associated with a wide range of sustainability risks throughout their life cycle. Human rights violations occur in the supply chain. Harmful substances are used both in products and their manufacture. Products can often have a short lifespan because of poor ergonomics, low quality and when they are not able to be repaired or upgraded.

**This product is a better choice.** It meets all the criteria in TCO Certified, the world's most comprehensive sustainability certification for IT products. Additionally, it fulfills the requirements of TCO Certified Edge, the supplemental certification that recognizes leading-edge products that exceed typical performance in a particular sustainability attribute. At our Product Finder **(tcocertified.com/product-finder)** you can find out which TCO Certified Edge criterion or criteria this product meets.

Criteria in TCO Certified have a life-cycle perspective and balance environmental and social responsibility. Compliance is verified by independent verification organizations that specialize in IT products, social responsibility or other sustainability issues. Verification is done both before and after the certificate is issued, covering the entire validity period. The process also includes ensuring that corrective actions are implemented in all cases of factory non-conformities.

Thank you for making a responsible product choice, that help drive progress towards a more sustainable future!

### Want to know more?

Read information about TCO Certified, full criteria documents, news and updates at **tcocertified.com.** On the website you'll also find our Product Finder, which presents a complete, searchable listing of certified products.

# Index


**Symbols/Numerics**

台灣對於危險物質的限制注意事項 35, 36
注意事項
台灣有害物質限制 35, 36

**A**

airline travel notice 8
altitude notice 21

**B**

battery 15
battery notice 8, 9, 23
battery recycling 23
Belarus regulatory notice 3
Brazil notice 3, 17

**C**

cable grounding notice 22
Canada modem statement 12
Canada notices 3
China environmental notices 26
China PC energy label 26
China restriction of hazardous substances notice 29, 31

**D**

disposal notices
battery 23
battery, user replacement 8
equipment 23
factory sealed battery 9

**E**

electronic hardware and battery recycling 23
ENERGY STAR certification 24
environmental notices 23
equipment disposal notice 23
ergonomics notice 5
European Union Commission Regulation 1275/2008 37

**F**

fan notice 16
Federal Communications Commission
notebook computers cables 2
notebook computers modifications 2
notebook computers notice 1

**G**

GS Notice 5

**H**

headset and earphone volume level notice 16

**I**

India restriction of hazardous substances notice 37

**J**

Japan modem statement 12
Japan notice 6
Japan power cord notice 19
Japan restriction of hazardous substances notice 37

**L**

labels, regulatory 1
laser safety notice 9, 16

**M**

Macrovision Corporation notice 13
maximum power levels 4
Mexico wireless notice 6
modem notices 10
modem statements
Canada 12
Japan 12
New Zealand 12
U.S. 10, 11
modifications, notebook computers
Federal Communications Commission 2

**N**

New Zealand modem statement 12
notices
airline travel 8
battery 8, 9, 15, 23
Belarus regulatory 3
Brazil 3, 17
Canada 3
China restriction of hazardous substances 29, 31
environmental 23
equipment disposal 23
ergonomics 5
fan 16
headset and earphone volume level 16
India restriction of hazardous substances 37
Japan 6
Japan power cord 19
Japan restriction of hazardous substances 37
laser safety 9, 16
Macrovision Corporation 13
Mexico 6
modem 10
perchlorate material 25
power cords 18
Singapore 7
South Korea 7
Taiwan 8
Thailand wireless notice 7
travel 20
notices, notebook computers
Federal Communications Commission 1

**P**

power cord notice 18

**R**

radio frequency bands 4
recycling, electronic hardware and battery 23

**S**

Singapore wireless notice 7

South Korea notice 7

## T

Taiwan notice 8
TCO Certified Certification 39
TCO Certified Edge Certification 40
Thailand wireless notice 7
travel notice 20
tropical warning notice 21
TV tuner, cable grounding notice 22

## U

U.S. modem statement 10, 11

## V

voice support 13
volume level notice, headset and earphone 16

## W

wireless LAN devices 2