CERTIFICATE #3478.01

N° 1-6736
Scope

TEST REPORT

EUT Description	**WWAN module installed in Convertible PC**
Brand Name	**HP**
Model Name	**HSN-I57C**
FCC / IC IDs	**B94HNI57CPT / 21374-L860GL16**
Date of Test Start/End	**2022-09-14 / 2022-09-23**
Features	**WWAN (LTE, UMTS), WLAN, BT** (see section 5)
Description	**Platform: HSN-I57C + Vendor1 antenna**

Applicant	**HP Inc.**
Address	**1501 Page Mill Road, Palo Alto CA 94304 USA**
Contact Person	**Sam Lin**
Telephone / Email	**+886 2 3789 6331 / sam.lin2@hp.com**

Reference Standards	**FCC 47 CFR Part §2.1093** **RSS-102, issue 5** (see section 1)	
RF Exposure Environment	**Portable devices - General population/uncontrolled exposure**	
	SAR Result	SAR Limit
Maximum SAR Result & Limit	**1.36 W/kg (1g)**	**1.6 W/kg (1g)**
Min. test separation distance	**0mm to phantom, 6.50mm to antenna edge**	

Test Report identification	**220815-03.TR01**
Revision Control	**Rev. 02** **This test report revision replaces any previous test report revision** (see section 8)

The test results relate only to the samples tested.
Reference to accreditation shall be used only by full reproduction of test report.

Issued by	Reviewed by
Digitally signed by Edgar GARCIA Date: 2023.01.10 10:49:04 +01'00'	Date: 2023.01.10 10:59:36 +01'00'
Edgar GARCIA (SAR Test Engineer)	Zayd OUACHICHA (Technical Manager)

Intel Corporation S.A.S – WRF Lab
425 rue de Goa – Le Cargo B6 - 06600 Antibes, France
Tel. +33493001400 / Fax +33493001401

Table of Contents

1. Standards, reference documents and applicable test methods 4

2. General conditions, competences and guarantees 4

3. Environmental Conditions 5

4. Test samples 5

5. EUT Features 6

6. Remarks and comments 9

7. Test Verdicts summary 9

8. Document Revision History 9

Annex A. Test & System Description 10

A.1 SAR DEFINITION 10

SPEAG SAR MEASUREMENT SYSTEM 11

A.1.1 SAR MEASUREMENT SETUP 11

A.1.2 E-FIELD MEASUREMENT PROBE 12

A.1.3 FLAT PHANTOM 13

A.1.4 DEVICE POSITIONER 13

DATA EVALUATION 14

SYSTEM AND LIQUID CHECK 16

A.1.5 SYSTEM CHECK 16

A.1.6 LIQUID CHECK 17

TEST EQUIPMENT LIST 18

A.1.7 SHARED INSTRUMENTATION 19

A.1.8 TISSUE SIMULANT LIQUID 19

MEASUREMENT UNCERTAINTY EVALUATION 20

RF EXPOSURE LIMITS 21

Annex B. Test Results 22

B.1 TEST CONDITIONS 22

B.1.1 Test SAR Test positions relative to the phantom 22

B.1.2 Test signal, Output power and Test Frequencies 23

B.1.3 Evaluation Exclusion and Test Reductions 24

B.2 Conducted Power Measurements Tablet Mode 27

B.2.1 WCDMA/ HSPA/ DC-HSPA 27

B.2.2 LTE 30

B.2.3 LTE UL Carrier Aggregation 49

B.3 TISSUE PARAMETERS MEASUREMENT 50

B.4 SYSTEM CHECK MEASUREMENTS 50

B.5 SAR TABLET TEST RESULTS 51

B.5.1 WCDMA II 51

B.5.2 WCDMA IV 51

B.5.3 WCDMA V 51

B.5.4 LTE 52

B.5.5 SAR Measurement Variability 57

B.5.6 Simultaneous Transmission SAR Evaluation 58

Annex C. Test System Plots 62

Annex D. TSL Dielectric Parameters 86

D.1 BODY 650MHZ-3900MHZ 86
Annex E. Calibration Certificates 88
Annex F. Photographs 90
F.1 TEST SAMPLES 90
F.2 TEST POSITIONS 91
F.3 ANTENNA HOST PLATFORM LOCATION AND ADJACENT EDGE POSITIONS RELATIVE TO THE BODY 92
F.4 PHANTOM LIQUID LEVEL DURING MEASUREMENTS 93

1. Standards, reference documents and applicable test methods

FCC	1. 1.FCC Title 47 CFR Part §2.1093 – Radiofrequency radiation exposure evaluation: portable devices. 2020-10-01 Edition 2. 2.FCC OET KDB 447498 D04 Interim General RF Exposure Guidance v01– RF Exposure Procedures and Equipment Authorization Policies for Mobile and Portable Devices. 3. 3.FCC OET KDB 616217 D04 v01r02 – SAR Evaluation Considerations for Laptop, Notebook, Netbook and Tablet Computers. 4. 4.FCC OET KDB 865664 D01 v01r04 – SAR Measurement Requirements for 100 MHz to 6 GHz. 5. 5.FCC OET KDB 865664 D02 v01r02 – RF Exposure Compliance Reporting and Documentation Considerations. 6. 6.FCC OET KDB 941225 D05 v02r05 – SAR Evaluation Considerations for LTE Devices. 7. 7.FCC OET KDB 941225 D01 v03r01 – 3G SAR Measurement Procedures. 8. 8.IEEE Std 1528-2013 – IEEE Recommended Practice Determining the Peak Spatial-Average Specific Absorption Rate (SAR) in the Human Head from Wireless Communication Devices: Measurement Techniques… 9. 9.TCB workshop November 2017; RF Exposure Procedures (LTE UL/DL Carrier Aggregation SAR) 10. 10.TCB workshop October 2018; RF Exposure Procedures (LTE Inter-Band Uplink Carrier Aggregation –Interim Procedures) 11. 11.TCB workshop November 2019; RF Exposure Policy Updates (5G NR FR1 NSA EN-DC UE SAR Evaluations) 12. 12.TCB workshop November 2019; 5G NR/ EN-DC Compliance Test Configurations
ISED	13. ISED RSS 102, Issue 5 – Radio Frequency (RF) Exposure Compliance of Radio communication Apparatus (All Frequency Bands 14. ISED RSS-102 Supplementary Procedures SPR-001 SAR testing requirements with regard to bystanders for laptop type computers with antennas built-In on display screen (Laptop Mode / Tablet Mode) 15. ISED Notice 2020-DRS2020 Applicability of IEC/IEEE62209-1528 and IEC 62209 -3 standard 16. ISED Notice 2016-DRS001 – Applicability of latest FCC RF Exposure KDB Procedures and Other Procedures. 17. ISED Notice 2012-DRS0529 – SAR correction for measured conductivity and relative permittivity based on IEC 62209-2 standard. 18. FCC OET KDB 447498 D01 V06 General RF Exposure Guidance v01– RF Exposure Procedures and Equipment Authorization Policies for Mobile and Portable Devices. 19. FCC OET KDB 616217 D04 v01r02 – SAR Evaluation Considerations for Laptop, Notebook, Netbook and Tablet Computers. 20. FCC OET KDB 865664 D01 v01r04 – SAR Measurement Requirements for 100 MHz to 6 GHz. 21. FCC OET KDB 865664 D02 v01r02 – RF Exposure Compliance Reporting and Documentation Considerations. 22. FCC OET KDB 941225 D05 v02r05 – SAR Evaluation Considerations for LTE Devices. 23. FCC OET KDB 941225 D01 v03r01 – 3G SAR Measurement Procedures. 24. IEC/IEEE 62209-1528:2020 Measurement procedure for the assessment of specific absorption rate of human exposure to radio frequency fields from hand-held and body-mounted wireless communication devices – Part 1528: Human models, instrumentation, and procedures (Frequency range of 4 MHz to 10 GHz)

2. General conditions, competences and guarantees

- ✓ Tests performed under FCC standards identified in section 1 are covered by A2LA accreditation.
- ✓ Tests performed under ISED standards identified in section 1 are covered by Cofrac accreditation.
- ✓ Intel Corporation SAS Wireless RF Lab (Intel WRF Lab) is an ISO/IEC 17025:2017 laboratory accredited by the American Association for Laboratory Accreditation (A2LA) with the certificate number 3478.01.
- ✓ Intel Corporation SAS Wireless RF Lab (Intel WRF Lab) is an Accredited Test Firm recognized by the FCC, with Designation Number FR0011.
- ✓ Intel Corporation SAS Wireless RF Lab (Intel WRF Lab) is an ISO/IEC 17025:2017 testing laboratory accredited by the French Committee for Accreditation (Cofrac) with the certificate number 1-6736.
- ✓ Intel Corporation SAS Wireless RF Lab (Intel WRF Lab) is a Registered Test Site listed by ISED, with ISED #1000Y.
- ✓ Intel WRF Lab only provides testing services and is committed to providing reliable, unbiased test results and interpretations.
- ✓ Intel WRF Lab is liable to the client for the maintenance of the confidentiality of all information related to the item under test and the results of the test.
- ✓ Intel WRF Lab has developed calibration and proficiency programs for its measurement equipment to ensure correlated and reliable results to its customers.
- ✓ This report is only referred to the item that has undergone the test.
- ✓ This report does not imply an approval of the product by the Certification Bodies or competent Authorities.

3. Environmental Conditions

✓ At the site where the measurements were performed the following limits were not exceeded during the tests:

Temperature	22.6ºC ± 1.5ºC
Humidity	44% ± 6%
Liquid Temperature	21.5ºC ± 1.5ºC

4. Test samples

Sample	Control #	Description	Model	Serial #	Date of receipt
#01	220815-02.S02	WWAN module installed in Convertible PC	HSN-I57C	C902NL009Y	2022-08-31

5. EUT Features

The herein information is provided by the customer
Intel WRF Lab declines any responsibility for the accuracy of the stated customer provided information, especially if it has any impact on the correctness of test results presented in this report.

Brand Name	HP
Model Name	HSN-I57C
Prototype / Production	Production
Host Identification	HSN-I57C
Exposure Conditions	Body worn

Supported radios

The module is a data only DUT supporting UMTS and LTE, with carrier aggregation. The applicable frequency bands and operating modes are identified in the following table.

WWAN:

Mode	Bands	Supported Tx Mode			
		WCDMA	HSDPA	HSUPA	DC-HSDPA
WCDMA / HSPA+	FDD II (1850.0 – 1910.0 MHz)	✓	✓	✓	✓
	FDD IV (1710.0 – 1755.0 MHz)	✓	✓	✓	✓
	FDD V (824.0 – 849.0 MHz)	✓	✓	✓	✓

FDD/TDD	Band	Modulation	Bandwidth					
			1.4	3	5	10	15	20
LTE FDD	Band 2 (1850.0 – 1910.0 MHz)	QPSK/16QAM	✓	✓	✓	✓	✓	✓
	Band 4 (1710.0 – 1755.0 MHz)	QPSK/16QAM	✓	✓	✓	✓	✓	✓
	Band 5 (824.0 – 849.0 MHz)	QPSK/16QAM	✓	✓	✓	✓		
	Band 7 (2500.0 – 2570.0 MHz)	QPSK/16QAM			✓	✓	✓	✓
	Band 12 (699.0 – 716.0 MHz)	QPSK/16QAM	✓	✓	✓	✓		
	Band 13 (777.0 – 787.0 MHz)	QPSK/16QAM			✓	✓		
	Band 14 (788.0 – 798.0 MHz)	QPSK/16QAM			✓	✓		
	Band 17 (704.0 – 716.0 MHz)	QPSK/16QAM			✓	✓		
	Band 25 (1850.0 – 1915.0 MHz)	QPSK/16QAM	✓	✓	✓	✓	✓	✓
	Band 26 (814.0 – 849.0 MHz)	QPSK/16QAM	✓	✓	✓	✓	✓	
	Band 30 (2305.0 – 2315.0 MHz)	QPSK/16QAM			✓	✓		
	Band 66 (1710.0 – 1780.0 MHz)	QPSK/16QAM	✓	✓	✓	✓	✓	✓
LTE TDD	Band 38 (2570.0 – 2620.0 MHz)	QPSK/16QAM			✓	✓	✓	✓
	Band 41 (2496.0 – 2690.0 MHz)	QPSK/16QAM			✓	✓	✓	✓
	Band 48 (3550.0 – 3700.0 MHz)	QPSK/16QAM			✓	✓	✓	✓

UL carrier aggregation LTE (Intra-band)
FDD Band 5B
FDD Band 7C
FDD Band 38C
FDD Band 41C
FDD Band 66B
FDD Band 66C

WLAN

Mode	UL Freq Range
802.11b/g/n/ax	2.4GHz (2400.0 – 2483.5 MHz)
802.11a/n/ac/ax	5.2GHz (5150.0 – 5250.0 MHz) 5.3GHz (5250.0 – 5350.0 MHz) 5.6GHz (5470.0 – 5725.0 MHz) 5.8GHz (5725.0 – 5850.0 MHz) 5.8GHz (5850.0 – 5895.0 MHz)
802.11ax	6.0GHz (5925.0 – 7125.0 MHz)
Bluetooth & BLE v5.2	2.4GHz (2400.0 – 2483.5 MHz)

Antenna Information “information provided by the applicant”
The DUT has one WWAN TX antenna (Ant5 TX/RX): • WWAN (Ant5 TX/RX): **Vendor 1**, PIFA antenna. P/N : 6036B0327801 (81EABL15.G79) See Annex *F* for more details on antennas location.
Simultaneous Transmission Configurations
WWAN Ant5 Tx/Rx + WLAN2 2.4GHz + WLAN1 BT WWAN Ant5 Tx/Rx + WLAN2 2.4GHz + WLAN1 2.4GHz WWAN Ant5 Tx/Rx + WLAN2 5GHz + WLAN1 BT WWAN Ant5 Tx/Rx + WLAN2 5GHz + WLAN1 5GHz WWAN Ant5 Tx/Rx + WLAN2 5GHz + WLAN1 5GHz+ WLAN1 BT WWAN Ant5 Tx/Rx + WLAN2 6GHz + WLAN1 BT WWAN Ant5 Tx/Rx + WLAN2 6GHz + WLAN1 6GHz WWAN Ant5 Tx/Rx + WLAN2 6GHz + WLAN1 6GHz + WLAN1 BT WLAN transmitter is considered in this report just for the simultaneous transmission evaluation with the WWAN module (See section B.5.6)
Additional information

• 5.60-5.65 GHz band (TDWR) is supported by the device
• Band gap is supported by the device
• Two different power settings are implemented in the DUT:
  ○ Max power for Notebook mode
  ○ Reduced power for Tablet mode
• The DUT does not support VoLTE, so Head Exposure is not considered for LTE and WCDMA modes. Maximum Power Reduction (MPR) is implemented according to 3GPP, and it is a permanent feature, built-in by design:

Modulation	Channel bandwidth / #RB						MPR (dB)
	1.4 MHz	3.0 MHz	5 MHz	10 MHz	15 MHz	20 MHz	
QPSK	> 5	> 4	> 8	> 12	> 16	> 18	≤ 1
16 QAM	≤ 5	≤ 4	≤ 8	≤ 12	≤ 16	≤ 18	≤ 1
16 QAM	> 5	> 4	> 8	> 12	> 16	> 18	≤ 2
64 QAM	≤ 5	≤ 4	≤ 8	≤ 12	≤ 16	≥18	≤ 2
64 QAM	> 5	> 4	> 8	> 12	>16	>18	≤ 3
256 QAM	≥1						≤ 5

A-MPR (additional MPR) was disabled during SAR testing

The following table indicates the power levels and tolerance for each mode:

Maximum Output power specification + Tune up tolerance

Mode	Technology	Bands	Class	Nominal (dBm)	Tolerance dB	Lower Tolerance (dBm)	Upper Tolerance (dBm)
Laptop	WCDMA/HSPA	FDD II (1850.0 – 1910.0 MHz)	3	23.5	±1	22.5	24.5
	WCDMA/HSPA	FDD IV (1710.0 – 1755.0 MHz)	3	23.5	±1	22.5	24.5
	WCDMA/HSPA	FDD V (824.0 – 849.0 MHz)	3	23.5	±1	22.5	24.5
	LTE	Band 2 (1850.0 – 1910.0 MHz)	3	23.0	±1	22.0	24.0
	LTE	Band 4 (1710.0 – 1755.0 MHz)	3	23.0	±1	22.0	24.0
	LTE	Band 5 (824.0 – 849.0 MHz)	3	23.0	±1	22.0	24.0
	LTE	Band 7 (2500.0 – 2570.0 MHz)	3	23.0	±1	22.0	24.0
	LTE	Band 12 (699.0 – 716.0 MHz)	3	23.0	±1	22.0	24.0
	LTE	Band 13 (777.0 – 787.0 MHz)	3	23.0	±1	22.0	24.0
	LTE	Band 14 (788.0 – 798.0 MHz)	3	23.0	±1	22.0	24.0
	LTE	Band 17 (704.0 – 716.0 MHz)	3	23.0	±1	22.0	24.0
	LTE	Band 25 (1850.0 – 1915.0 MHz)	3	23.0	±1	22.0	24.0
	LTE	Band 26 (814.0 – 849.0 MHz)	3	23.0	±1	22.0	24.0
	LTE	Band 30 (2305.0 – 2315.0 MHz)	3	22.0	±1	21.0	23.0
	LTE	Band 38 (2570.0 – 2620.0 MHz)	3	23.0	±1	22.0	24.0
	LTE	Band 41 (2496.0 – 2690.0 MHz)	3	23.0	±1	22.0	24.0
	LTE	Band 41 (2496.0 – 2690.0 MHz)	2	26.0	±1	25.0	27.0
	LTE	Band 48 (3550.0 – 3700.0 MHz)	3	21.0	±1	20.0	22.0
	LTE	Band 66 (1710.0 – 1780.0 MHz)	3	23.0	±1	22.0	24.0
Tablet	WCDMA/HSPA	FDD II (1850.0 – 1910.0 MHz)	3	21.0	±1	20.0	22.0
	WCDMA/HSPA	FDD IV (1710.0 – 1755.0 MHz)	3	18.5	±1	17.5	19.5
	WCDMA/HSPA	FDD V (824.0 – 849.0 MHz)	3	22.5	±1	21.5	23.5
	LTE	Band 2 (1850.0 – 1910.0 MHz)	3	21.0	±1	20.0	22.0
	LTE	Band 4 (1710.0 – 1755.0 MHz)	3	18.5	±1	17.5	19.5
	LTE	Band 5 (824.0 – 849.0 MHz)	3	22.0	±1	21.0	23.0
	LTE	Band 7 (2500.0 – 2570.0 MHz)	3	19.0	±1	18.0	20.0
	LTE	Band 12 (699.0 – 716.0 MHz)	3	23.0	±1	22.0	24.0
	LTE	Band 13 (777.0 – 787.0 MHz)	3	22.5	±1	21.5	23.5
	LTE	Band 14 (788.0 – 798.0 MHz)	3	22.5	±1	21.5	23.5
	LTE	Band 17 (704.0 – 716.0 MHz)	3	23.0	±1	22.0	24.0
	LTE	Band 25 (1850.0 – 1915.0 MHz)	3	21.0	±1	20.0	22.0
	LTE	Band 26 (814.0 – 849.0 MHz)	3	22.5	±1	21.5	23.5
	LTE	Band 30 (2305.0 – 2315.0 MHz)	3	20.0	±1	19.0	21.0
	LTE	Band 38 (2570.0 – 2620.0 MHz)	3	19.0	±1	18.0	20.0
	LTE	Band 41 (2496.0 – 2690.0 MHz)	3	19.0	±1	18.0	20.0
	LTE	Band 41 (2496.0 – 2690.0 MHz)	2	19.0	±1	18.0	20.0
	LTE	Band 48 (3550.0 – 3700.0 MHz)	3	21.0	±1	20.0	22.0
	LTE	Band 66 (1710.0 – 1780.0 MHz)	3	18.5	±1	17.5	19.5

6. Remarks and comments

1. Only the plots for the test positions with the highest measured SAR per band/mode are included in Annex C as required per FCC OET KDB 865664 D02, paragraph 2.3.h

7. Test Verdicts summary

The statement of conformity to applicable standards in the table below are based on the measured values, without taking into account the measurement uncertainties.

Mode	Band (UL)	Highest Reported SAR (1g) (W/kg)	Verdict
WCDMA	FDD II (1850.0 – 1910.0 MHz)	1.13	P
	FDD IV (1710.0 – 1755.0 MHz)	0.92	P
	FDD V (824.0 – 849.0 MHz)	0.69	P
LTE FDD	Band 2 (1850.0 – 1910.0 MHz)	NM	NA
	Band 4 (1710.0 – 1755.0 MHz)	NM	NA
	Band 5 (824.0 – 849.0 MHz)	NM	NA
	Band 7 (2500.0 – 2570.0 MHz)	1.36	P
	Band 12 (699.0 – 716.0 MHz)	0.88	P
	Band 13 (777.0 – 787.0 MHz)	0.47	P
	Band 14 (788.0 – 798.0 MHz)	0.60	P
	Band 17 (704.0 – 716.0 MHz)	NM	NA
	Band 25 (1850.0 – 1915.0 MHz)	1.12	P
	Band 26 (814.0 – 849.0 MHz)	0.81	P
	Band 30 (2305.0 – 2315.0 MHz)	0.95	P
	Band 66 (1710.0 – 1780.0 MHz)	0.97	P
LTE TDD	Band 38 (2570.0 – 2620.0 MHz)	NM	NA
	Band 41 (2496.0 – 2690.0 MHz)	0.71	P
	Band 48 (3550.0 – 3700.0 MHz)	0.39	P

P: Pass
F: Fail
NM: Not Measured
NA: Not Applicable

According to the FCC OET KDB 690783 D01, this is the summary of the values for the Grant Listing:

Highest Reported SAR (1g) (W/kg)				
Exposure Condition	Equipment Class			
	PCE	DTS	DSS	U-NII
Body Worn	1.36	0.62	0.031	1.00
Simultaneous Tx	Sum-SAR: 2.91 SPLSR : 0.03	Sum-SAR: 2.19 SPLSR : 0.02	Sum-SAR: 2.91 SPLSR : 0.03	Sum-SAR: 2.91 SPLSR : 0.03

Considering the results of the performed test according to FCC 47CFR Part 2.1093 & ISED RSS 102, Issue 5 the item under test is IN COMPLIANCE with the requested specifications specified in Section1. Standards, reference documents and applicable test methods

8. Document Revision History

Revision #	Modified by	Revision Details
Rev. 00	E. Garcia	First Issue
Rev. 01	E. Garcia	Update FCC ID in front page Update DUT Type in section B.1.1. and plots
Rev. 02	E. Garcia	Update Tx power target LTE48 in Laptop mode

Annex A. Test & System Description

A.1 SAR Definition

Specific Absorption rate is defined as the time derivative of the incremental energy (dW) absorbed by (dissipated in) and incremental mass (dm) contained in a volume element (dV) of a given density (ρ).

$$SAR = \frac{d}{dt} \cdot \left(\frac{dW}{dm}\right) = \frac{d}{dt} \cdot \left(\frac{dW}{\rho \cdot dV}\right)$$

SAR is expressed in units of watts per kilogram (W/kg). SAR can be related to the electric field at a point by

$$SAR = \frac{\sigma |E|^2}{\rho}$$

Where:

σ = Conductivity of the tissue (S/m)
ρ = Mass density of the tissue (kg/m3)
E = RMS electric field strength (V/m)

SPEAG SAR Measurement System

A.1.1 SAR Measurement Setup

The DASY6 system for performing compliance tests consists of the following items:

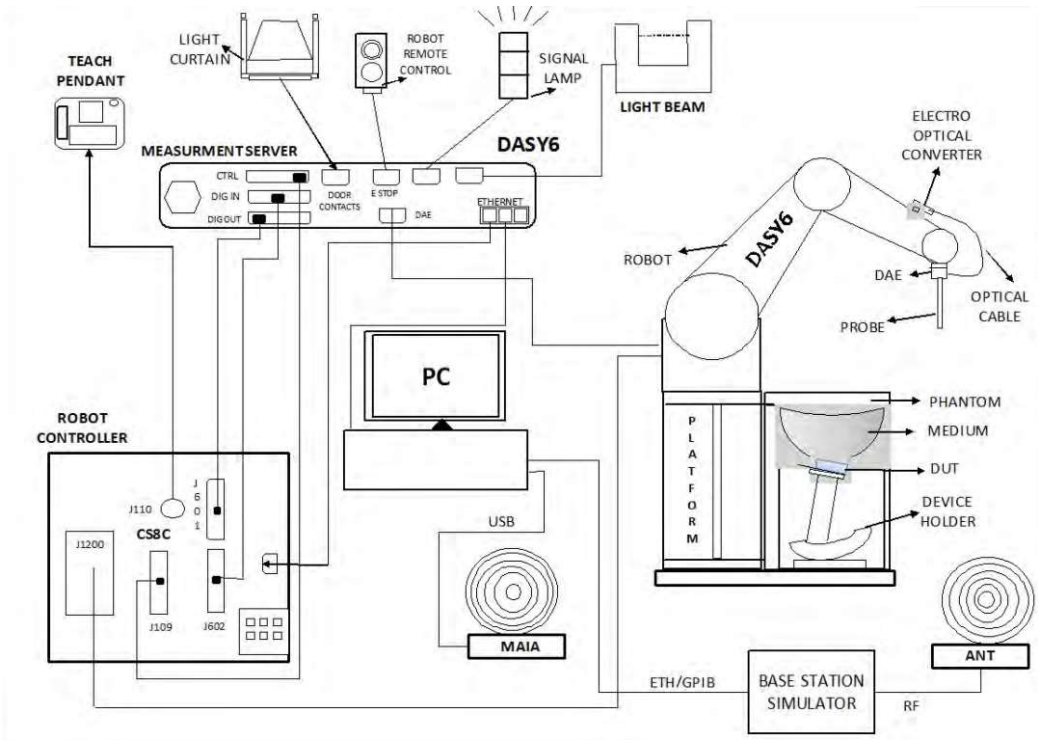

- ✓ A standard high precision 6-axis robot (Staübli TX/RX family) with controller, teach pendant and software. It includes an arm extension for accommodating the data acquisition electronics (DAE)
- ✓ An isotropic field probe optimized and calibrated for the targeted measurements.
- ✓ A data acquisition electronics (DAE) which performs the signal amplification, signal multiplexing, AD-conversion, offset measurements, mechanical surface detection, collision detection, etc. The unit is battery powered with standard or rechargeable batteries. The signal is optically transmitted to the EOC.
- ✓ The Electro-optical Converter (EOC) performs the conversion from optical to electrical signals for the digital communication to the DAE. The EOC signal is transmitted to the measurement server.
- ✓ The function of the measurement server is to perform the time critical tasks such as signal filtering, control of the robot operation and fast movements interrupts.
- ✓ The Light Beam used is for probe alignment. This improves the (absolute) accuracy of the probe positioning.
- ✓ A computer running Win7 professional operating system and the DASY6 software.
- ✓ Remote control and teach pendant as well as additional circuitry for robot safety such as warning lamps, etc.
- ✓ The phantom, the device holder and other accessories according to the targeted measurement.
- ✓ MAIA is a hardware interface (Antenna) used to evaluate the modulation and audio interference characteristics of RF signals.
- ✓ ANT is an ultra-wideband antenna for use with the base station simulators over 698 MHz to 6GHz.
- ✓ The base station simulator is an equipment used for SAR cellular tests in order to emulate the cellular signals characteristics and behavior between a regular base station and the equipment under test.
- ✓ Tissue simulating liquid.
- ✓ System Validation dipoles.
- ✓ Network emulator.

A.1.2 E-Field Measurement Probe

The probe is constructed using three orthogonal dipole sensors arranged on an interlocking, triangular prism core. The probe has built-in shielding against static charges and is contained within a PEEK cylindrical enclosure material at the tip.

The probe's characteristics are:

Frequency Range	30MHz – 6GHz
Length	337 mm
Probe tip external diameter	2.5 mm
Typical distance between dipoles and the probe tip	1 mm
Axial Isotropy (in human-equivalent liquids)	±0.3 dB
Hemispherical Isotropy (in human-equivalent liquids)	±0.5 dB
Linearity	±0.2 dB
Maximum operating SAR	100 W/kg
Lower SAR detection threshold	0.001 W/kg

A.1.3 Flat Phantom

Phantom for compliance testing of handheld and body-mounted wireless devices in the frequency range of 30 MHz to 6 GHz. ELI is fully compatible with the IEC 62209-2 standard and all known tissue simulating liquids. ELI has been optimized regarding its performance and can be integrated into our standard phantom tables. A cover prevents evaporation of the liquid. Reference markings on the phantom allow installation of the complete setup, including all predefined phantom positions and measurement grids, by teaching three points. The phantom is compatible with all SPEAG dosimetric probes and dipoles.

The phantom's characteristics are:

Material	Vinylester, glass fiber reinforced (VE-GF)
Shell thickness	2 mm ± 0.2 mm
Filling volume	30 Liters approx.
Dimensions	Major axis: 600mm / Minor axis: 400mm

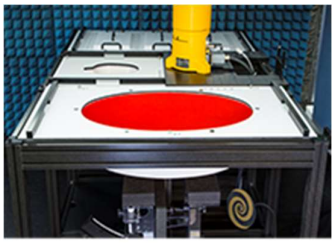

A.1.4 Device Positioner

The SAR in the phantom is approximately inversely proportional to the square of the distance between the source and the liquid surface. For a source at 5 mm distance, a positioning uncertainty of 0.5 mm would produce a SAR uncertainty of 20%. Accurate device positioning is therefore crucial for accurate and repeatable measurements. The positions in which the devices must be measured are defined by the standards.

The DASY device holder is designed to cope with the different positions given in the standard. It has two scales for device rotation (with respect to the body axis) and device inclination (with respect to the line between the ear reference points). The rotation center for both scales is the ear reference point (ERP). Thus the device needs no repositioning when changing the angles.

The DASY device holder is constructed of low-loss POM material having the following dielectric parameters: relative permittivity ε=3 and loss tangent δ=0.02. The amount of dielectric material has been reduced in the closest vicinity of the device, since measurements have suggested that the influence of the clamp on the test results could thus be lowered.

A simple but effective and easy-to-use extension for the Mounting Device; facilitates testing of larger devices according to IEC 62209-2 (e.g., laptops, cameras, etc.); lightweight and fits easily on the upper part of the Mounting Device in place of the phone positioner. The extension is fully compatible with the Twin SAM, ELI and other Flat Phantoms.

Data Evaluation

Power Reference measurement

The robot measures the E field in a specified reference position that can be either the selected section's grid reference point or a user point in this section at 4mm of the inner surface of the phantom, 2mm for frequencies above 3GHz.

Area Scan

Measurement procedures for evaluating SAR from wireless handsets typically start with a coarse measurement grid to determine the approximate location of the local peak SAR values. This is known as the area-scan procedure. The SAR distribution is scanned along the inside surface of one side of the phantom head, at least for an area larger than the projection of the handset and antenna. The distance between the measured points and phantom surface should be less than 8 mm, and should remain constant (with variation less than ± 1 mm) during the entire scan in order to determine the locations of the local peak SAR with sufficient accuracy. The angle between the probe axis and the surface normal line is recommended but not required to be less than 30°. If this angle is larger than 30° and the closest point on the probe-tip housing to the phantom surface is closer than a probe diameter, the boundary effect may become larger and polarization dependent. This additional uncertainty needs to be analyzed and accounted for. To achieve this, modified test procedures and additional uncertainty analyses not described in this recommended practice may be required. The measurement and interpolation point spacing should be chosen such as to allow identification of the local peak locations to within one-half of the linear dimension of a side of the zoom-scan volume. Because a local peak having specific amplitude and steep gradients may produce a lower peak spatial-average SAR compared to peaks with slightly lower amplitude and less steep gradients, it is necessary to evaluate these other peaks as well. However, since the spatial gradients of local SAR peaks are a function of the wavelength inside the tissue-equivalent liquid and the incident magnetic field strength, it is not necessary to evaluate local peaks that are less than 2 dB or more below the global maximum peak. Two-dimensional spline algorithms (Brishoual et al. 2001; Press et al., 1996) are typically used to determine the peaks and gradients within the scanned area. If a peak is found at a distance from the scan border of less than one-half the edge dimension of the desired 1 g or 10 g cube, the measurement area should be enlarged if possible.

Zoom Scan

To evaluate the peak spatial-average SAR values for 1 g or 10 g cubes, fine resolution volume scans, called zoom scans, are performed at the peak SAR locations identified during the area scan. The minimum zoom scan volume size should extend at least 1.5 times the edge dimension of a 1 g cube in all directions from the center of the scan volume, for both 1 g and 10 g peak spatial-average SAR evaluations. Along the phantom curved surfaces, the front face of the volume facing the tissue/liquid interface conforms to the curved boundary, to ensure that all SAR peaks are captured. The back face should be equally distorted to maintain the correct averaging mass. The flatness and orientation of the four side faces are unchanged from that of a cube whose orientation is within ± 30° of the line normal to the phantom at the center of the cube face next to the phantom surface. The peak local SAR locations that were determined in the area scan (interpolated values) should be used for the centers of the zoom scans. If a scan volume cannot be centered due to proximity of a phantom shape feature, the probe should be tilted to allow scan volume enlargement. If probe tilt is not feasible, the zoom-scan origin may be shifted, but not by more than half of the 1 g or 10 g cube edge dimension.

After the zoom-scan measurement, extrapolations from the closest measured points to the surface, for example along lines parallel to the zoom-scan centerline, and interpolations to a finer resolution between all measured and extrapolated points are performed. Extrapolation algorithm considerations are described in 6.5.3, and 3-D spline methods (Brishoual et al., 2001; Kreyszig, 1983; Press et al., 1996) can be used for interpolation. The peak spatial-average SAR is finally determined by a numerical averaging of the local SAR values in the interpolation grid, using for example a trapezoidal algorithm for the integration (averaging).

In some areas of the phantom, such as the jaw and upper head regions, the angle of the probe with respect to the line normal to the surface may be relatively large, e.g., greater than ± 30º, which could increase the boundary effect error to a larger level. In these cases, during the zoom scan a change in the orientation of the probe, the phantom, or both is recommended but not required for the duration of the zoom scan, so that the angle between the probe axis and the line normal to the surface is within 30º for all measurement points.

Power Drift measurement

The robot re-measures the E-Field in the same reference location measured at the Power Reference. The drift measurement gives the field difference in dB from the first to the last reference reading. This allows a user to monitor the power drift of the device under test that must remain within a maximum variation of ±5%.

Post-processing

The procedure for spatial peak SAR evaluation has been implemented according to the IEEE1528 and IEC 62209-1/2 standards. It can be conducted for 1g and 10g.

The software allows evaluations that combine measured data and robot positions, such as:

- ✓ Maximum search
- ✓ Extrapolation
- ✓ Boundary correction
- ✓ Peak search for averaged SAR

Interpolation between the measured points is performed when the resolution of the grid is not fine enough to compute the average SAR over a given mass.

Extrapolation routines are used to obtain SAR values between the lowest measurement points and the inner phantom surface. The extrapolation is determined by the surface detection distance and the probe sensor offset. Several measurements at different distances are necessary for the extrapolation.

System and Liquid Check

A.1.5 System Check

The system performance check verifies that the system operates within its specifications. System and operator errors can be detected and corrected. It is recommended that the system performance check be performed prior to any usage of the system in order to guarantee reproducible results.

The system performance check uses normal SAR measurements in a simplified setup with a well characterized source. This setup was selected to give a high sensitivity to all parameters that might fail or vary over time. The system check does not intend to replace the calibration of the components, but indicates situations where the system uncertainty is exceeded due to drift or failure.

In the simplified setup for system check, the EUT is replaced by a calibrated dipole and the power source is replaced by a controlled continuous wave generated by a signal generator. The calibrated dipole must be placed beneath the flat phantom section of the phantom at the correct distance.

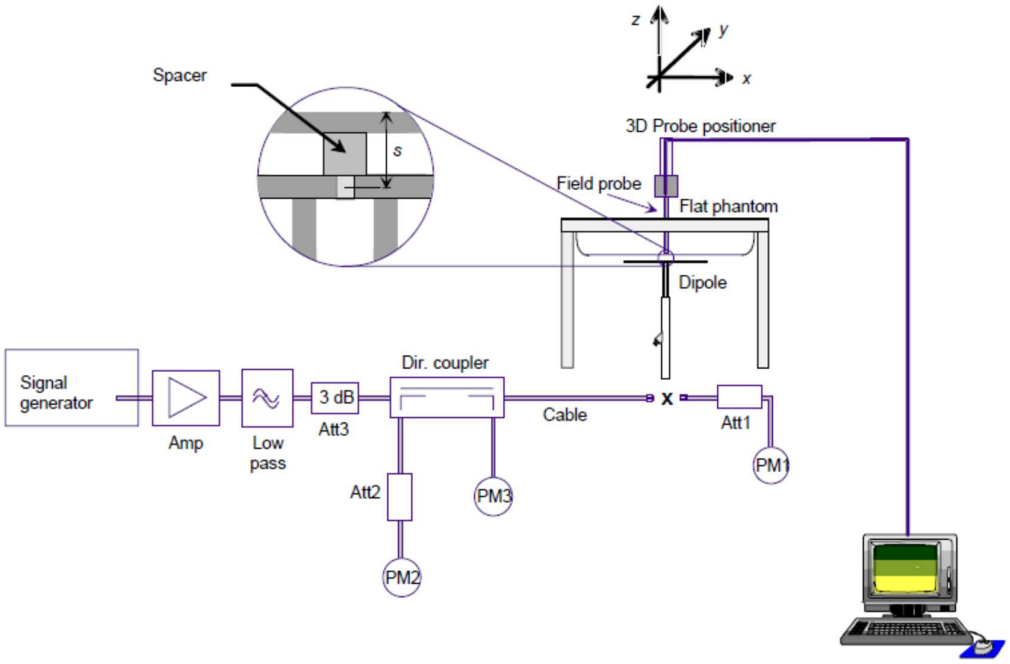

The equipment setup is shown below:

- ✓ Signal Generator
- ✓ Amplifier
- ✓ Directional coupler
- ✓ Power meter
- ✓ Calibrated dipole

First, the power meter PM1 (including attenuator Att1) is connected to the cable to measure the forward power at the location of the connector (x) to the system check source. The signal generator is adjusted for the desired forward power at the connector as read by power meter PM1 after attenuation Att1 and also as coupled through Att2 to PM2. After connecting the cable to the source, the signal generator is readjusted for the same reading at power meter PM2.

SAR results are normalized to a forward power of 1W to compare the values with the calibration reports results as described at IEEE 1528 and IEC 62209 standards.

A.1.6 Liquid Check

The dielectric parameters check is done prior to the use of the tissue simulating liquid. The verification is made by comparing the relative permittivity and conductivity to the values recommended by the applicable standards.

The liquid verification was performed using the following test setup:

- ✓ VNA (Vector Network Analyzer)
- ✓ Open-Short-Load calibration kit
- ✓ RF Cable
- ✓ Open-Ended Coaxial probe
- ✓ DAK software tool
- ✓ SAR Liquid
- ✓ De-ionized water
- ✓ Thermometer

These are the target dielectric properties of the tissue-equivalent liquid material as defined in FCC OET KDB 865664 D01.

Frequency	Body SAR	
(MHz)	ε_r (F/m)	σ (S/m)
150	61.9	0.80
300	58.2	0.92
450	56.7	0.94
835	55.2	0.97
900	55.0	1.05
1450	54.0	1.30
1800-2000	53.3	1.52
2450	52.7	1.95
3000	52.0	2.73
5800	48.2	6.00

(ε_r = relative permittivity, σ = conductivity and ρ = 1000 kg/m3)

The measurement system implement a SAR error compensation algorithm as documented in IEEE Std 1528-2013 (equivalent to draft standard IEEE P1528-2011) to automatically compensate the measured SAR results for deviations between the measured and required tissue dielectric parameters (applied to only scale up the measured SAR, and not downward) so, according to FCC OET KDB 865664 D01, the tolerance for ε_r and σ may be relaxed to ± 10%.

Test Equipment List

SAR System #2

ID #	Device	Type/Model	Serial Number	Manufacturer	Cal. Date	Cal. Due Date
002-009	Dosimetric E-Field probe	EX3DV4	3978	SPEAG	2022-05-17	2023-05-17
001-017	Data Acquisition Electronics	DAE4	1703	SPEAG	2022-04-28	2023-04-28
002-000	6-axis Robot	TX60 L	F16/55FXA1/A/01	STAÜBLI	n/a	n/a
002-001	Robot Controller	CS8C	F16/55FXA1/C/01	STAÜBLI	n/a	n/a
002-002	Measurement Server	DASY6 P/N: SE UMS 028 BB	1489	SPEAG	n/a	n/a
002-003	Electro-Optical Converter	EOC60	1098	SPEAG	n/a	n/a
002-004	Light Beam Unit	SE UKS 030 AA	-	Di-soric	n/a	n/a
002-005	Oval Flat Phantom	ELI v8.0	2048	SPEAG	n/a	n/a
002-007	Measurement SW	DASY v6.14	9-5DEE27C2	SPEAG	n/a	n/a
002-006	Laptop Holder	P/N SM LH1 001 CD	-	SPEAG	n/a	n/a

A.1.7 Shared Instrumentation

ID #	Device	Type/Model	Serial Number	Manufacturer	Cal. Date	Cal. Due Date
123-000	USB Power Sensor	NRP-Z81	102278	R&S	2021-04-13	2023-04-13
124-000	USB Power Sensor	NRP-Z81	102279	R&S	2021-04-13	2023-04-13
135-000	Network Emulator	CMW500	152721	R&S	2022-03-29	2024-03-29
126-000	Vector Signal Generator	ESG E4438C	MY45092885	Agilent	2021-05-27	2023-05-27
099-000	Liquid measurement SW	DAK-3.5 V2.6.0.5	9-2687B491	SPEAG	n/a	n/a
071-000	750 MHz System Validation Dipole	D750V3	1136	SPEAG	2021-01-21	2023-01-21
072-000	835 MHz System Validation Dipole	D835V2	4d192	SPEAG	2021-01-21	2023-01-21
073-000	1750 MHz System Validation Dipole	D1750V2	1133	SPEAG	2021-01-14	2023-01-14
074-000	1900 MHz System Validation Dipole	D1900V2	5d197	SPEAG	2021-01-14	2023-01-14
075-000	2300 MHz System Validation Dipole	D2300V2	1046	SPEAG	2021-01-13	2023-01-13
076-000	2600 MHz System Validation Dipole	D2600V2	1100	SPEAG	2021-01-13	2023-01-13
404-000	3700 MHz System Validation Dipole	D3700V2	1093	SPEAG	2021-05-21	2023-05-21
327-000	Temperature & Humidity Logger	RA32E-TH1-RAS	RA32-F0DED9	AVTECH	2021-03-09	2023-03-09
398-000	Thermometer	922	33622932/208	Testo	2021-11-09	2023-11-19
198-000	0.8-21GHz RF amplifier	TVA-82-213A	2004003	Mini-Circuits	2022-02-01	2023-01-26
078-000	RF Cable	ST-18/SMAm/SMAm/48	1158830	Huber & Suhner	2022-02-01	2023-01-26
079-000	RF Cable	ST-18/SMAm/SMAm/48	1158831	Huber & Suhner	2022-02-01	2023-01-26
077-000	Coupler	CD0.5-8-20-30	1251-002	Amd-group	2022-02-01	2023-01-26

A.1.8 Tissue Simulant Liquid

TSL	Manufacturer / Model	Freq Range (MHz)	Main Ingredients
Body WideBand	SPEAG MBBL600-6000V6 Batch 191014-02	600-6000	Ethanediol, Sodium petroleum sulfonate, Hexylene Glycol / 2-Methyl-pentane-2.4-diol, Alkoxylated alcohol

Measurement Uncertainty Evaluation

The system uncertainty evaluation is shown in the table below with a coverage factor of k = 2 to indicate a 95% level of confidence:

SPEAG DASY6 Uncertainty Budget According to IEC/IEEE 62209-1528 (4 MHz - 6 GHz) including IEEE 1528-2013 and IEC 62209-1/2016, IEC 62209-2/2010								
Symbol	Error Description	Uncert. Value	Prob Dist.	Div.	(ci) 1g	(ci) 10g	Std Unc. (1g)	Std Unc. (10g)
Measurement System Errors								
CF	*Probe Calibration*	±14.0 %	N	2	1	1	±7.0 %	±7.0 %
CF_{drift}	Probe Calibration Drift	±1.0 %	N	1	1	1	±1.0 %	±1.0 %
LIN	Probe Linearity	±4.7 %	R	√3	1	1	±2.7 %	±2.7 %
BBS	Broadband Signal	±3.0 %	N	2	1	1	±1.5 %	±1.5 %
ISO	*Axial Isotropy*	±4.7 %	R	√3	0.5	0.5	±1.4 %	±1.4 %
ISO	Hemispherical Isotropy	±9.6 %	R	√3	0.5	0.5	±2.8 %	±2.8 %
DAE	Data Acquisition	±0.3 %	N	1	1	1	±0.3 %	±0.3 %
AMB	RF Ambient	±1.8 %	N	1	1	1	±1.8 %	±1.8 %
Δ_{sys}	Probe Positioning	±0.2 %	N	1	0.33	0.33	±0.1 %	±0.1 %
DAT	Data Processing	±2.3 %	N	1	1	1	±2.3 %	±2.3 %
Phantom and Device Errors								
LIQ(σ)	Conductivity (meas.)$_{DAK}$	±2.5 %	N	1	0.78	0.71	±2.0 %	±1.8 %
LIQ(Tσ)	Conductivity (temp.)$_{BB}$	±3.4 %	R	√3	0.78	0.71	±1.5 %	±1.4 %
EPS	Phantom Permittivity	±14.0 %	R	√3	0.25	0.25	±2.0 %	±2.0 %
DAS	Distance DUT - TSL	±2.0 %	N	1	2	2	±4.0 %	±4.0 %
H	Device Holder	±3.6 %	N	1	1	1	±3.6 %	±3.6 %
MOD	DUT Modulation$_m$	±2.4 %	R	√3	1	1	±1.4 %	±1.4 %
TAS	Time-average SAR	±2.6 %	R	√3	1	1	±1.5 %	±1.5 %
RF_{drift}	DUT drift	±5.0 %	N	1	1	1	±2.9 %	±2.9 %
Correction to the SAR results								
C(ε, σ)	Deviation to Target	±1.9 %	N	1	1	0.84	±1.9 %	±1.6 %
Combined Std. Uncertainty							±11.5 %	±11.4 %
Expanded STD Uncertainty							**±23.1 %**	**±22.9 %**

RF Exposure Limits

SAR assessments have been made in line with the requirements of FCC 47 CFR Part 2.1093 on the limitation of exposure of the general population / uncontrolled exposure for portable devices.

Exposure Type	General Population / Uncontrolled Environment
Peak spatial-average SAR (averaged over any 1 gram of tissue)	**1.6 W/kg**
Whole body average SAR	**0.08 W/kg**
Peak spatial-average SAR (extremities) (averaged over any 10 grams of tissue)	**4.0 W/kg**

Annex B. Test Results

The herein test results were performed by:

Test case measurement	Test Personnel
SAR measurement	E. Garcia
Conducted measurement	F. Heurtematte

B.1 Test Conditions

B.1.1 Test SAR Test positions relative to the phantom

The device under test was a Convertible PC, **HSN-I57C**. The device was operated utilizing proprietary software, and each channel was measured using a communication tester to determine the maximum average power.

The device has 2 power settings:
Laptop mode
Tablet mode

See section 5 for details about power values for the configuration
See Annex 0 for information about the platform antenna configuration

Laptop mode
As described below on section B.1.3, Laptop position does not require SAR testing.

Notebook	WWAN Ant 5 TX/RX
Position	Laptop

Tablet mode

According to FCC OET KDB 616217 D04, the back surface and edges of the tablet should be tested for SAR compliance with the tablet touching the phantom. The SAR Test Exclusion Threshold in FCC OET KDB 447498 can be applied to determine SAR test exclusion for adjacent edge configurations. (See section 5 for power specifications)

The reduced power values shown on section 5 and the closest distance from the antenna to an adjacent tablet edge is used to determine if SAR testing is required for the adjacent edges, with the adjacent edge positioned against the phantom and the edge containing the antenna positioned perpendicular to the phantom.

Considering the antenna location diagrams in Annex F and the test exclusions described before, the surfaces/edges to be measured for each antenna are:

Tablet	WWAN Ant 5 TX/RX
Position	Top Edge Back Face Right Edge

See B.1.3.1 for a more detailed list of the applied reductions.

See F.2 Test position section for more information on the tested positions.

B.1.2 Test signal, Output power and Test Frequencies

B.1.2.1 LTE TDD consideration

According to KDB 941225 D05 SAR for LTE Devices, for Time-Division Duplex (TDD) systems, SAR must be tested using a fixed periodic duty factor according to the highest transmission duty factor implemented for the device and supported by the defined 3GPP LTE TDD configurations.

LTE TDD Bands support 3GPP TS 36.211 section 4.2 for Type 2 Frame structure and table 2 for uplink-downlink configurations and table 1 for special subframe configurations

Table 1

Special subframe configuration	Normal cyclic prefix in downlink			Extended cyclic prefix in downlink		
	DwPTS	UpPTS		DwPTS	UpPTS	
		Normal cyclic prefix in uplink	Extended cyclic prefix in uplink		Normal cyclic prefix in uplink	Extended cyclic prefix in uplink
0	6592 T_S	(1+X) 2192 T_S	(1+X) 2560 T_S	7680 · T_S	(1+X) 2192 T_S	(1+X) 2560 T_S
1	19760 T_S			20480 T_S		
2	21952 T_S			23040 T_S		
3	24144 T_S			25600 T_S		
4	26336 T_S			7680 T_S	(2+X) 2192 T_S	(2+X) 2560 T_S
5	6592 T_S	(2+X) 2192 T_S	(2+X) 2560 T_S	20480 T_S		
6	19760 T_S			23040 T_S		
7	21952 T_S			12800 T_S		
8	24144 T_S			-	-	-
9	13168 T_S			-	-	-
10	13168 T_S	13150 T_S	12800 T_S	-	-	

Table2

Uplink-Downlink Config.	Downlink-to-Uplink Switch-point Periodicity	Subframe Number										Calculated Duty Cycle (%)
		0	1	2	3	4	5	6	7	8	9	
0	5 ms	D	S	U	U	U	D	S	U	U	U	63.3%
1	5 ms	D	S	U	U	D	D	S	U	U	D	43.3%
2	5 ms	D	S	U	D	D	D	S	U	D	D	23.3%
3	10 ms	D	S	U	U	U	D	D	D	D	D	31.7%
4	10 ms	D	S	U	U	D	D	D	D	D	D	21.7%
5	10 ms	D	S	U	D	D	D	D	D	D	D	11.7%
6	5 ms	D	S	U	U	U	D	S	U	U	D	53.3%

Calculated duty cycle = Extended cyclic prefix in uplink *(TS)*# of S + # of U / period
The configuration used for SAR testing was the number 0 which corresponds to the highest duty cycle (Power Class 3)

B.1.3 Evaluation Exclusion and Test Reductions

B.1.3.1 SAR evaluation exclusion

FCC:

The SAR Test Exclusion Threshold in FCC OET KDB 447498 can be applied to determine SAR test exclusion for adjacent edge configurations. For 100MHz to 6GHz and test separation distances ≤50mm, the 1-g and 10-g SAR test exclusion thresholds are determined by the following formula:

$$[(\text{max. power of channel, including tune} - \text{up tolerance, mW})/(\text{min. test separation distance, mm})] \cdot \left[\sqrt{f_{(GHz)}}\right] \leq 3.0 \; for \; 1g \; SAR, and \leq 7.5 \; for \; 10g \; extremity \; SAR \quad (1)$$

Where:

f(GHz) is the RF channel transmit frequency in GHz
Power and distance are rounded to the nearest mW and mm before calculation
The result is rounded to one decimal place for comparison
The values 3.0 and 7.5 are referred to as numeric thresholds

The test exclusions are applicable only when the minimum test separation distance is ≤ 50 mm, and for transmission frequencies between 100 MHz and 6 GHz. When the minimum test separation distance is < 5 mm, a distance of 5 mm is applied to determine SAR test exclusion.

For test separation distances > 50 mm, the 1-g and 10-g SAR test exclusion thresholds are determined using the following formulas:

$$\langle(Power\ allowed\ at\ numeric\ threshold\ for\ 50\ mm\ in\ (1)) + (test\ separation\ distance - 50\ mm) \cdot (f_{MHz}/150)\rangle mW, \; for\ 100MHz\ to\ 1500MHz \quad (2)$$

$$\langle(Power\ allowed\ at\ numeric\ threshold\ for\ 50\ mm\ in\ (1)) + (test\ separation\ distance - 50\ mm) \cdot 10)\rangle mW, \; for\ 1500MHz\ and\ \leq 6GHz \quad (3)$$

Test Exclusion

Antenna	Band Name	Output power				Back Face	Top Edge	Left Edge	Right Edge	Bottom Edge	Laptop	Back Face	Top Edge	Left Edge	Right Edge	Bottom Edge	Laptop
		Notebook		Tablet													
		dBm	mW	dBm	mW												
WWAN Ant 5 TX/RX	FDD II	24.5	281.8	22.0	158.5	**<50**	**<50**	>50	**<50**	>50	>50	T	T	R	T	R	R
	FDD IV	24.5	281.8	20.5	112.2	**<50**	**<50**	>50	**<50**	>50	>50	T	T	R	T	R	R
	FDD V	24.5	281.8	23.5	223.9	**<50**	**<50**	>50	**<50**	>50	>50	T	T	R	T	R	R
	LTE 2	24.0	251.2	22.0	158.5	**<50**	**<50**	>50	**<50**	>50	>50	R	R	R	R	R	R
	LTE 4	24.0	251.2	19.5	89.1	**<50**	**<50**	>50	**<50**	>50	>50	R	R	R	R	R	R
	LTE 5	24.0	251.2	23.0	199.5	**<50**	**<50**	>50	**<50**	>50	>50	R	R	R	R	R	R
	LTE 7	24.0	251.2	20.0	100.0	**<50**	**<50**	>50	**<50**	>50	>50	T	T	R	T	R	R
	LTE 12	24.0	251.2	24.0	251.2	**<50**	**<50**	>50	**<50**	>50	>50	T	T	R	T	R	R
	LTE 13	24.0	251.2	23.5	223.9	**<50**	**<50**	>50	**<50**	>50	>50	T	T	R	T	R	R
	LTE 14	24.0	251.2	23.5	223.9	**<50**	**<50**	>50	**<50**	>50	>50	T	T	R	T	R	R
	LTE 17	24.0	251.2	24.0	251.2	**<50**	**<50**	>50	**<50**	>50	>50	R	R	R	R	R	R
	LTE 25	24.0	251.2	22.0	158.5	**<50**	**<50**	>50	**<50**	>50	>50	T	T	R	T	R	R
	LTE 26	24.0	251.2	23.5	223.9	**<50**	**<50**	>50	**<50**	>50	>50	T	T	R	T	R	R
	LTE 30	23.0	199.5	21.0	125.9	**<50**	**<50**	>50	**<50**	>50	>50	T	T	R	T	R	R
	LTE 38	24.0	251.2	20.0	100.0	**<50**	**<50**	>50	**<50**	>50	>50	R	R	R	R	R	R
	LTE 41	24.0	251.2	20.0	100.0	**<50**	**<50**	>50	**<50**	>50	>50	T	T	R	T	R	R
	LTE 48	22.0	158.5	22.0	158.5	**<50**	**<50**	>50	**<50**	>50	>50	T	T	R	T	R	R
	LTE 66	24.0	251.2	19.5	89.1	**<50**	**<50**	>50	**<50**	>50	>50	T	T	R	T	R	R

T: Tested position

R: Reduced
See Annex *F* for a more detailed explanation of the separation distance related to the platform.

In order to evaluate SAR test exclusion for Laptop and tablet user positions in which the separation distance passes the 50mm limit, equations (2) and (3) are used with the corresponding frequencies for each band, the user distances for the two positions and with the power values described on Section 5. The table below shows all cellular bands evaluated in this report grouped by frequency band, separation distances and the corresponding Power threshold in mW for each combination (distance and frequency)

Bands	Frequency	Separation distance to the body on mm										
		60	70	80	90	100	110	160	170	190	200	
LTE 12,13, 14, 17	750	223	273	323	373	423	473	723	773	873	923	Threshold values in mW
FDD V, LTE 5, 26	835	220	275	331	387	442	498	776	832	943	999	
FDD IV, LTE 4, 66	1750	213	313	413	513	613	713	1213	1313	1513	1613	
FDD II, LTE 2, 25	1900	209	309	409	509	609	709	1209	1309	1509	1609	
LTE 30	2300	199	299	399	499	599	699	1199	1299	1499	1599	
LTE 7, 38, 41	2600	193	293	393	493	593	693	1193	1293	1493	1593	
LTE 48	3700	180	280	380	480	580	680	1180	1280	1480	1580	

The highest output power for all bands in tablet mode is 251.2mW which is smaller than all the values of the table, SAR is not required for the tablet top edge (>200mm) and left edge (>160mm) positions

ISED:

According to RSS-102 section 2.5.1, SAR evaluation is required if the separation distance between the user and/or bystander and the antenna and/or radiating element of the device is less than or equal to 20 cm, except when the device operates at or below the applicable output power level (adjusted for tune-up tolerance) for the specified separation distance defined in Table below:

SAR evaluation — Exemption limits for routine evaluation based on frequency and separation distance					
Frequency	**Exemption Limits (mW)**				
(MHz)	**At separation distance of ≤5 mm**	**At separation distance of 10 mm**	**At separation distance of 15 mm**	**At separation distance of 20 mm**	**At separation distance of 25 mm**
≤300	71 mW	101 mW	132 mW	162 mW	193 mW
450	52 mW	70 mW	88 mW	106 mW	123 mW
835	17 mW	30 mW	42 mW	55 mW	67 mW
1900	7 mW	10 mW	18 mW	34 mW	60 mW
2450	4 mW	7 mW	15 mW	30 mW	52 mW
3500	2 mW	6 mW	16 mW	32 mW	55 mW
5800	1 mW	6 mW	15 mW	27 mW	41 mW
Frequency	**Exemption Limits (mW)**				
(MHz)	**At separation distance of 30 mm**	**At separation distance of 35 mm**	**At separation distance of 40 mm**	**At separation distance of 45 mm**	**At separation distance of ≥50 mm**
≤300	223 mW	254 mW	284 mW	315 mW	345 mW
450	141 mW	159 mW	177 mW	195 mW	213 mW
835	80 mW	92 mW	105 mW	117 mW	130 mW
1900	99 mW	153 mW	225 mW	316 mW	431 mW
2450	83 mW	123 mW	173 mW	235 mW	309 mW
3500	86 mW	124 mW	170 mW	225 mW	290 mW
5800	56 mW	71 mW	85 mW	97 mW	106 mW

B.1.3.2 General SAR test reduction

According to FCC OET KDB 447498, testing of other required channels within the operating mode of a frequency band is not required when the reported 1-g or 10-g SAR for the mid-band or highest output power channel is:

- ≤ 0.8 W/kg or 2.0 W/kg, for 1-g or 10-g respectively, when the transmission band is ≤ 100 MHz
- ≤ 0.6 W/kg or 1.5 W/kg, for 1-g or 10-g respectively, when the transmission band is between 100 MHz and 200 MHz
- ≤ 0.4 W/kg or 1.0 W/kg, for 1-g or 10-g respectively, when the transmission band is ≥ 200 MHz

WWAN SAR Test reduction

Transmission Mode	SAR test exclusion/reduction
HSDPA	According to FCC OET KDB 941225 D01, SAR evaluation is not required when the maximum average output power is < ¼ dB higher than the measured on the corresponding channels without HSDPA, using 12.2kbps RMC, and the maximum SAR for 12.2kbps RMC is < 1.2 W/kg.
HSUPA	According to FCC OET KDB 941225 D01, SAR evaluation is not required when the maximum average output power is < ¼ dB higher than the measured on the corresponding channels without HSUPA, using 12.2kbps RMC, and the maximum SAR for 12.2kbps RMC is < 1.2 W/kg.
DC+HSDPA	According to FCC OET KDB 941225 D01, SAR evaluation is not required when the maximum average output power is < ¼ dB higher than the measured on the corresponding channels without DC+HSDPA, using 12.2kbps RMC, and the maximum SAR for 12.2kbps RMC is < 1.2 W/kg.
LTE	According to FCC OET KDB 941225 D05, testing of 100% RB allocation, higher order modulations or lower BW is not required when these conditions are met: For QPSK with 100% RB allocation, SAR is not required when the highest maximum output power for 100 % RB allocation is less than the highest maximum output power in 50% and 1 RB allocations and the highest reported SAR for 1 RB and 50% RB allocation are ≤ 0.8 W/kg. For each modulation besides QPSK, SAR is required only when the highest maximum output power for the configuration in the higher order modulation is > ½ dB higher than the same configuration in QPSK or when the reported SAR for the QPSK configuration is > 1.45 W/kg. For lower BW, only measure SAR when the highest maximum output power of a configuration requiring testing in the smaller channel bandwidth is > ½ dB higher than the equivalent channel configurations in the largest channel bandwidth configuration or the reported SAR of a configuration for the largest channel bandwidth is > 1.45 W/kg. For LTE bands that do not support at least three non-overlapping channels in certain channel bandwidths, test the available non-overlapping channels instead. When a device supports overlapping channel assignment in a channel bandwidth configuration, the middle channel of the group of overlapping channels should be selected for testing; therefore, the requirement for H, M, and L channels may not fully apply

B.2 Conducted Power Measurements Tablet Mode

B.2.1 WCDMA/ HSPA/ DC-HSPA

B.2.1.1 WCDMA Band II

Mode	Channel Number	Freq (MHz)	Subset	Average Power Measured (dBm)	Factory Upper Tolerance (dBm)
RMC	9262	1852.4	-	21.65	22.00
	9400	1880	-	21.52	22.00
	9538	1907.6	-	21.74	22.00
HSDPA	9262	1852.4	1	21.65	22.00
			2	21.60	22.00
			3	21.83	22.00
			4	21.69	22.00
	9400	1880	1	21.59	22.00
			2	21.89	22.00
			3	21.74	22.00
			4	21.61	22.00
	9538	1907.6	1	21.86	22.00
			2	21.69	22.00
			3	21.57	22.00
			4	21.91	22.00
HSUPA	9262	1852.4	1	21.65	22.00
			2	21.72	22.00
			3	21.54	22.00
			4	21.59	22.00
			5	21.83	22.00
	9400	1880	1	21.86	22.00
			2	20.37	22.00
			3	21.72	22.00
			4	20.26	22.00
			5	21.60	22.00
	9538	1907.6	1	20.48	22.00
			2	21.90	22.00
			3	21.41	22.00
			4	21.72	22.00
			5	21.31	22.00
DC-HSDPA	9262	1852.4	1	21.60	22.00
			2	21.44	22.00
			3	21.82	22.00
			4	20.68	22.00
	9400	1880	1	21.72	22.00
			2	20.57	22.00
			3	21.57	22.00
			4	20.78	22.00
	9538	1907.6	1	21.88	22.00
			2	21.65	22.00
			3	21.54	22.00
			4	21.73	22.00

According to KDB 941225, SAR measurements are not required for the secondary modes different than RMC as the maximum output power specified for production units in the secondary modes are ≤1/4 dB higher than the primary mode and the highest reported SAR of the primary mode is scaled by the ratio of specified maximum output power of the secondary to primary mode and the adjusted SAR is ≤ 1.2W/Kg.

B.2.1.2 WCDMA Band IV

Mode	Channel Number	Freq (MHz)	Subset	Average Power Measured (dBm)	Factory Upper Tolerance (dBm)
RMC	1312	1712.4	-	19.34	19.50
	1413	1732.6	-	19.21	19.50
	1513	1752.6	-	19.07	19.50
HSDPA	1312	1712.4	1	19.29	19.50
			2	19.23	19.50
			3	19.10	19.50
			4	19.26	19.50
	1413	1732.6	1	19.24	19.50
			2	19.06	19.50
			3	19.27	19.50
			4	19.19	19.50
	1513	1752.6	1	19.06	19.50
			2	19.25	19.50
			3	19.20	19.50
			4	19.09	19.50
HSUPA	1312	1712.4	1	19.21	19.50
			2	19.31	19.50
			3	19.17	19.50
			4	19.26	19.50
			5	19.04	19.50
	1413	1732.6	1	19.12	19.50
			2	17.98	19.50
			3	19.30	19.50
			4	17.87	19.50
			5	19.27	19.50
	1513	1752.6	1	17.84	19.50
			2	19.08	19.50
			3	18.98	19.50
			4	19.24	19.50
			5	18.93	19.50
DC-HSDPA	1312	1712.4	1	19.25	19.50
			2	18.79	19.50
			3	19.07	19.50
			4	18.26	19.50
	1413	1732.6	1	19.27	19.50
			2	18.20	19.50
			3	19.27	19.50
			4	18.06	19.50
	1513	1752.6	1	19.07	19.50
			2	19.26	19.50
			3	19.22	19.50
			4	19.05	19.50

According to KDB 941225, SAR measurements are not required for the secondary modes different than RMC as the maximum output power specified for production units in the secondary modes are ≤1/4 dB higher than the primary mode and the highest reported SAR of the primary mode is scaled by the ratio of specified maximum output power of the secondary to primary mode and the adjusted SAR is ≤ 1.2W/Kg.

B.2.1.3 WCDMA Band V

Mode	Channel Number	Freq (MHz)	Subset	Average Power Measured (dBm)	Factory Upper Tolerance (dBm)
RMC	4132	826.4	-	22.95	23.50
	4183	836.6	-	23.09	23.50
	4233	846.6	-	22.83	23.50
HSDPA	4132	826.4	1	22.99	23.50
			2	23.06	23.50
			3	22.81	23.50
			4	23.05	23.50
	4183	836.6	1	23.09	23.50
			2	22.75	23.50
			3	22.54	23.50
			4	22.55	23.50
	4233	846.6	1	22.21	23.50
			2	22.30	23.50
			3	22.33	23.50
			4	21.94	23.50
HSUPA	4132	826.4	1	23.05	23.50
			2	23.50	23.50
			3	23.07	23.50
			4	23.5	23.50
			5	22.72	23.50
	4183	836.6	1	23.3	23.50
			2	20.82	23.50
			3	23.10	23.50
			4	20.86	23.50
			5	23.12	23.50
	4233	846.6	1	20.48	23.50
			2	22.79	23.50
			3	21.51	23.50
			4	22.59	23.50
			5	21.54	23.50
DC- HSDPA	4132	826.4	1	22.62	23.50
			2	21.22	23.50
			3	22.23	23.50
			4	21.12	23.50
	4183	836.6	1	22.39	23.50
			2	21.12	23.50
			3	22.38	23.50
			4	20.81	23.50
	4233	846.6	1	22.04	23.50
			2	23.03	23.50
			3	23.09	23.50
			4	22.78	23.50

According to KDB 941225, SAR measurements are not required for the secondary modes different than RMC as the maximum output power specified for production units in the secondary modes are ≤1/4 dB higher than the primary mode and the highest reported SAR of the primary mode is scaled by the ratio of specified maximum output power of the secondary to primary mode and the adjusted SAR is ≤ 1.2W/Kg.

B.2.2 LTE

B.2.2.1 LTE Band 2 FDD

SAR Measurement for LTE Band 2 FDD (Frequency range: 1850 – 1910MHz) is covered by LTE Band 25 FDD (Frequency range: 1850 – 1915MHz) due to overlapping frequency range, same maximum tune-up and same bandwidth.

B.2.2.2 LTE Band 4 FDD

SAR Measurement for LTE Band 4 FDD (Frequency range: 1710 – 1755MHz) is covered by LTE Band 66 FDD (Frequency range: 1710 – 1780MHz) due to overlapping frequency range, same maximum tune-up and same bandwidth.

B.2.2.3 LTE band 5 FDD

SAR Measurement for LTE Band 5 FDD (Frequency range: 824 – 849MHz) is covered by LTE Band 26 FDD (Frequency range: 814 – 849MHz) due to overlapping frequency range, lower maximum tune-up and similar bandwidth.

B.2.2.4 LTE band 7 FDD

Band	BW	Channel #	Freq (MHz)	% RB Allocation	RB Position	QPSK			16 QAM		
						Factory Upper Tolerance (dBm)	MPR	Measured Output Power (dBm)	Factory Upper Tolerance (dBm)	MPR	Measured Output Power (dBm)
LTE 7	20 MHz	20850	2510	1RB Low	1 Pos 0	20.00	0	19.61	20.00	0	19.59
				1RB Mid	1 Pos 50	20.00	0	19.41	20.00	0	19.60
				1RB High	1 Pos 99	20.00	0	19.09	20.00	0	19.44
				50% RB Low	50 Pos 0	20.00	0	19.51	20.00	0	19.53
				50% RB Mid	50 Pos 24	20.00	0	19.47	20.00	0	19.50
				50% RB High	50 Pos 50	20.00	0	19.23	20.00	0	19.25
				100% RB	100 Pos 0	20.00	0	19.41	20.00	0	19.44
		21100	2535	1RB Low	1 Pos 0	20.00	0	19.23	20.00	0	19.48
				1RB Mid	1 Pos 50	20.00	0	19.28	20.00	0	19.54
				1RB High	1 Pos 99	20.00	0	19.28	20.00	0	19.64
				50% RB Low	50 Pos 0	20.00	0	19.21	20.00	0	19.21
				50% RB Mid	50 Pos 24	20.00	0	19.27	20.00	0	19.26
				50% RB High	50 Pos 50	20.00	0	19.32	20.00	0	19.31
				100% RB	100 Pos 0	20.00	0	19.30	20.00	0	19.31
		21350	2560	1RB Low	1 Pos 0	20.00	0	19.42	20.00	0	19.45
				1RB Mid	1 Pos 50	20.00	0	19.52	20.00	0	19.58
				1RB High	1 Pos 99	20.00	0	19.77	20.00	0	19.80
				50% RB Low	50 Pos 0	20.00	0	19.42	20.00	0	19.43
				50% RB Mid	50 Pos 24	20.00	0	19.36	20.00	0	19.37
				50% RB High	50 Pos 50	20.00	0	19.69	20.00	0	19.70
				100% RB	100 Pos 0	20.00	0	19.47	20.00	0	19.50
	15 MHz	20825	2507.5	1RB Low	1 Pos 0	20.00	0	19.70	20.00	0	19.82
				1RB Mid	1 Pos 38	20.00	0	19.55	20.00	0	19.80
				1RB High	1 Pos 74	20.00	0	19.34	20.00	0	19.53
				50% RB Low	38 Pos 0	20.00	0	19.71	20.00	0	19.67
				50% RB Mid	38 Pos 19	20.00	0	19.59	20.00	0	19.60
				50% RB High	38 Pos 39	20.00	0	19.53	20.00	0	19.53
				100% RB	75 Pos 0	20.00	0	19.58	20.00	0	19.60
		21100	2535	1RB Low	1 Pos 0	20.00	0	19.28	20.00	0	19.60
				1RB Mid	1 Pos 38	20.00	0	19.33	20.00	0	19.57
				1RB High	1 Pos 74	20.00	0	19.31	20.00	0	19.47
				50% RB Low	38 Pos 0	20.00	0	19.26	20.00	0	19.32
				50% RB Mid	38 Pos 19	20.00	0	19.31	20.00	0	19.31
				50% RB High	38 Pos 39	20.00	0	19.32	20.00	0	19.31
				100% RB	75 Pos 0	20.00	0	19.33	20.00	0	19.35
		21375	2562.5	1RB Low	1 Pos 0	20.00	0	19.40	20.00	0	19.40
				1RB Mid	1 Pos 38	20.00	0	19.58	20.00	0	19.67
				1RB High	1 Pos 74	20.00	0	19.79	20.00	0	19.88
				50% RB Low	38 Pos 0	20.00	0	19.38	20.00	0	19.44
				50% RB Mid	38 Pos 19	20.00	0	19.55	20.00	0	19.60
				50% RB High	38 Pos 39	20.00	0	19.71	20.00	0	19.73
				100% RB	75 Pos 0	20.00	0	19.58	20.00	0	19.59
	10 MHz	20800	2505	1RB Low	1 Pos 0	20.00	0	19.69	20.00	0	19.97
				1RB Mid	1 Pos 24	20.00	0	19.58	20.00	0	19.72
				1RB High	1 Pos 49	20.00	0	19.56	20.00	0	19.80
				50% RB Low	25 Pos 0	20.00	0	19.66	20.00	0	19.66
				50% RB Mid	25 Pos 12	20.00	0	19.62	20.00	0	19.61
				50% RB High	25 Pos 25	20.00	0	19.58	20.00	0	19.58
				100% RB	50 Pos0	20.00	0	19.60	20.00	0	19.62
		21100	2535	1RB Low	1 Pos 0	20.00	0	19.29	20.00	0	19.30
				1RB Mid	1 Pos 24	20.00	0	19.30	20.00	0	19.35
				1RB High	1 Pos 49	20.00	0	19.34	20.00	0	19.37
				50% RB Low	25 Pos 0	20.00	0	19.24	20.00	0	19.25
				50% RB Mid	25 Pos 12	20.00	0	19.29	20.00	0	19.30
				50% RB High	25 Pos 25	20.00	0	19.33	20.00	0	19.34
				100% RB	50 Pos0	20.00	0	19.30	20.00	0	19.28
		21400	2565	1RB Low	1 Pos 0	20.00	0	19.46	20.00	0	19.71
				1RB Mid	1 Pos 24	20.00	0	19.71	20.00	0	19.80
				1RB High	1 Pos 49	20.00	0	19.79	20.00	0	19.90
				50% RB Low	25 Pos 0	20.00	0	19.52	20.00	0	19.53
				50% RB Mid	25 Pos 12	20.00	0	19.65	20.00	0	19.68
				50% RB High	25 Pos 25	20.00	0	19.69	20.00	0	19.72
				100% RB	50 Pos0	20.00	0	19.68	20.00	0	19.69

Band	BW	Channel #	Freq (MHz)	% RB Allocation	RB Position	QPSK			16 QAM		
						Factory Upper Tolerance (dBm)	MPR	Measured Output Power (dBm)	Factory Upper Tolerance (dBm)	MPR	Measured Output Power (dBm)
LTE 7	5 MHz	20775	2502.5	1RB Low	1 Pos 0	20.00	0	19.49	20.00	0	19.76
				1RB Mid	1 Pos 12	20.00	0	19.50	20.00	0	19.67
				1RB High	1 Pos 24	20.00	0	19.47	20.00	0	19.55
				50% RB Low	12 Pos 0	20.00	0	19.44	20.00	0	19.45
				50% RB Mid	12 Pos 6	20.00	0	19.41	20.00	0	19.43
				50% RB High	12 Pos 11	20.00	0	19.44	20.00	0	19.40
				100% RB	25 Pos 0	20.00	0	19.43	20.00	0	19.32
		21100	2535	1RB Low	1 Pos 0	20.00	0	19.18	20.00	0	19.22
				1RB Mid	1 Pos 12	20.00	0	19.24	20.00	0	19.21
				1RB High	1 Pos 24	20.00	0	19.25	20.00	0	19.42
				50% RB Low	12 Pos 0	20.00	0	19.10	20.00	0	19.08
				50% RB Mid	12 Pos 6	20.00	0	19.11	20.00	0	19.10
				50% RB High	12 Pos 11	20.00	0	19.14	20.00	0	19.09
				100% RB	25 Pos 0	20.00	0	19.14	20.00	0	19.12
		21425	2567.5	1RB Low	1 Pos 0	20.00	0	19.64	20.00	0	19.70
				1RB Mid	1 Pos 12	20.00	0	19.62	20.00	0	19.80
				1RB High	1 Pos 24	20.00	0	19.75	20.00	0	19.82
				50% RB Low	12 Pos 0	20.00	0	19.50	20.00	0	19.46
				50% RB Mid	12 Pos 6	20.00	0	19.52	20.00	0	19.51
				50% RB High	12 Pos 11	20.00	0	19.51	20.00	0	19.45
				100% RB	25 Pos 0	20.00	0	19.54	20.00	0	19.47

B.2.2.5 LTE band 12 FDD

Band	BW	Channel #	Freq (MHz)	% RB Allocation	RB Position	QPSK			16 QAM		
						Factory Upper Tolerance (dBm)	MPR	Measured Output Power (dBm)	Factory Upper Tolerance (dBm)	MPR	Measured Output Power (dBm)
LTE 12	10 MHz	23095	707.5	1RB Low	1 Pos 0	24.00	0	23.53	24.00	1	22.75
				1RB Mid	1 Pos 24	24.00	0	23.43	24.00	1	22.69
				1RB High	1 Pos 49	24.00	0	23.42	24.00	1	22.69
				50% RB Low	25 Pos 0	24.00	1	22.42	24.00	2	21.44
				50% RB Mid	25 Pos 12	24.00	1	22.41	24.00	2	21.45
				50% RB High	25 Pos 24	24.00	1	22.41	24.00	2	21.39
				100% RB	50 Pos 0	24.00	1	22.46	24.00	2	21.35
	5 MHz	23035	701.5	1RB Low	1 Pos 0	24.00	0	23.24	24.00	1	22.33
				1RB Mid	1 Pos 12	24.00	0	23.44	24.00	1	22.64
				1RB High	1 Pos 24	24.00	0	23.54	24.00	1	22.56
				50% RB Low	12 Pos 0	24.00	1	22.35	24.00	2	21.34
				50% RB Mid	12 Pos 6	24.00	1	22.44	24.00	2	21.54
				50% RB High	12 Pos 11	24.00	1	22.52	24.00	2	21.53
				100% RB	25 Pos 0	24.00	1	22.48	24.00	2	21.46
		23095	707.5	1RB Low	1 Pos 0	24.00	0	23.44	24.00	1	22.49
				1RB Mid	1 Pos 12	24.00	0	23.44	24.00	1	22.75
				1RB High	1 Pos 24	24.00	0	23.37	24.00	1	22.60
				50% RB Low	12 Pos 0	24.00	1	22.38	24.00	2	21.37
				50% RB Mid	12 Pos 6	24.00	1	22.41	24.00	2	21.40
				50% RB High	12 Pos 11	24.00	1	22.39	24.00	2	21.36
				100% RB	25 Pos 0	24.00	1	22.43	24.00	2	21.41
		23155	713.5	1RB Low	1 Pos 0	24.00	0	23.45	24.00	1	22.62
				1RB Mid	1 Pos 12	24.00	0	23.61	24.00	1	22.80
				1RB High	1 Pos 24	24.00	0	23.57	24.00	1	22.64
				50% RB Low	12 Pos 0	24.00	1	22.48	24.00	2	21.53
				50% RB Mid	12 Pos 6	24.00	1	22.65	24.00	2	21.67
				50% RB High	12 Pos 11	24.00	1	22.62	24.00	2	21.75
				100% RB	25 Pos 0	24.00	1	22.66	24.00	2	21.67
	3 MHz	23025	700.5	1RB Low	1 Pos 0	24.00	0	23.22	24.00	1	22.33
				1RB Mid	1 Pos 7	24.00	0	23.34	24.00	1	22.65
				1RB High	1 Pos 14	24.00	0	23.45	24.00	1	22.57
				50% RB Low	8 Pos 0	24.00	1	22.28	24.00	2	21.33
				50% RB Mid	8 Pos 4	24.00	1	22.39	24.00	2	21.39
				50% RB High	8 Pos 7	24.00	1	22.45	24.00	2	21.47
				100% RB	15 Pos 0	24.00	1	22.36	24.00	2	21.32
		23095	707.5	1RB Low	1 Pos 0	24.00	0	23.41	24.00	1	22.57
				1RB Mid	1 Pos 7	24.00	0	23.43	24.00	1	22.68
				1RB High	1 Pos 14	24.00	0	23.38	24.00	1	22.62
				50% RB Low	8 Pos 0	24.00	1	22.37	24.00	2	21.38
				50% RB Mid	8 Pos 4	24.00	1	22.39	24.00	2	21.53
				50% RB High	8 Pos 7	24.00	1	22.37	24.00	2	21.45
				100% RB	15 Pos 0	24.00	1	22.47	24.00	2	21.40
		23165	714.5	1RB Low	1 Pos 0	24.00	0	23.54	24.00	1	22.78
				1RB Mid	1 Pos 7	24.00	0	23.59	24.00	1	22.66
				1RB High	1 Pos 14	24.00	0	23.49	24.00	1	22.76
				50% RB Low	8 Pos 0	24.00	1	22.65	24.00	2	21.65
				50% RB Mid	8 Pos 4	24.00	1	22.67	24.00	2	21.66
				50% RB High	8 Pos 7	24.00	1	22.62	24.00	2	21.64
				100% RB	15 Pos 0	24.00	1	22.61	24.00	2	21.62

Band	BW	Channel #	Freq (MHz)	% RB Allocation	RB Position	QPSK			16 QAM		
						Factory Upper Tolerance (dBm)	MPR	Measured Output Power (dBm)	Factory Upper Tolerance (dBm)	MPR	Measured Output Power (dBm)
LTE 12	1.4 MHz	23017	699.7	1RB Low	1 Pos 0	24.00	0	23.25	24.00	1	22.37
				1RB Mid	1 Pos 2	24.00	0	23.24	24.00	1	22.44
				1RB High	1 Pos 5	24.00	0	23.36	24.00	1	22.49
				50% RB Low	3 Pos 0	24.00	1	22.21	24.00	2	22.27
				50% RB Mid	3 Pos 1	24.00	1	21.19	24.00	2	22.34
				50% RB High	3 Pos 2	24.00	1	22.23	24.00	2	22.22
				100% RB	6 Pos 0	24.00	1	22.23	24.00	2	21.35
		23095	707.5	1RB Low	1 Pos 0	24.00	0	23.51	24.00	1	22.45
				1RB Mid	1 Pos 2	24.00	0	23.46	24.00	1	22.46
				1RB High	1 Pos 5	24.00	0	23.42	24.00	1	22.38
				50% RB Low	3 Pos 0	24.00	1	22.44	24.00	2	22.48
				50% RB Mid	3 Pos 1	24.00	1	22.44	24.00	2	22.59
				50% RB High	3 Pos 2	24.00	1	22.40	24.00	2	22.48
				100% RB	6 Pos 0	24.00	1	22.43	24.00	2	21.45
		23173	715.3	1RB Low	1 Pos 0	24.00	0	23.66	24.00	1	22.59
				1RB Mid	1 Pos 2	24.00	0	23.60	24.00	1	22.49
				1RB High	1 Pos 5	24.00	0	23.59	24.00	1	22.50
				50% RB Low	3 Pos 0	24.00	1	22.57	24.00	2	22.69
				50% RB Mid	3 Pos 1	24.00	1	22.59	24.00	2	22.70
				50% RB High	3 Pos 2	24.00	1	22.59	24.00	2	22.63
				100% RB	6 Pos 0	24.00	1	22.61	24.00	2	21.65

B.2.2.6 LTE band 13 FDD

Band	BW	Channel #	Freq (MHz)	% RB Allocation	RB Position	QPSK			16 QAM		
						Factory Upper Tolerance (dBm)	MPR	Measured Output Power (dBm)	Factory Upper Tolerance (dBm)	MPR	Measured Output Power (dBm)
LTE 13	10 MHz	23230	782	1RB Low	1 Pos 0	23.50	0	22.94	23.50	1	22.04
				1RB Mid	1 Pos 24	23.50	0	22.96	23.50	1	22.10
				1RB High	1 Pos 49	23.50	0	22.91	23.50	1	21.97
				50% RB Low	25 Pos 0	23.50	1	21.90	23.50	2	20.99
				50% RB Mid	25 Pos 12	23.50	1	21.85	23.50	2	20.86
				50% RB High	25 Pos 24	23.50	1	21.76	23.50	2	20.65
				100% RB	50 Pos 0	23.50	1	22.00	23.50	2	20.86
	5.0 MHz	23230	782	1RB Low	1 Pos 0	23.50	0	22.89	23.50	1	22.02
				1RB Mid	1 Pos 12	23.50	0	22.86	23.50	1	21.93
				1RB High	1 Pos 24	23.50	0	22.88	23.50	1	22.02
				50% RB Low	12 Pos 0	23.50	1	21.76	23.50	2	20.77
				50% RB Mid	12 Pos 6	23.50	1	21.80	23.50	2	20.76
				50% RB High	12 Pos 11	23.50	1	21.79	23.50	2	20.81
				100% RB	25 Pos 0	23.50	1	21.75	23.50	2	20.71

B.2.2.7 LTE band 14 FDD

Band	BW	Channel #	Freq (MHz)	% RB Allocation	RB Position	QPSK			16 QAM		
						Factory Upper Tolerance (dBm)	MPR	Measured Output Power (dBm)	Factory Upper Tolerance (dBm)	MPR	Measured Output Power (dBm)
LTE 14	10 MHz	23330	793	1RB Low	1 Pos 0	23.50	0	22.73	23.50	1	22.11
				1RB Mid	1 Pos 24	23.50	0	22.83	23.50	1	22.06
				1RB High	1 Pos 49	23.50	0	22.66	23.50	1	21.97
				50% RB Low	25 Pos 0	23.50	1	21.84	23.50	2	20.74
				50% RB Mid	25 Pos 12	23.50	1	21.84	23.50	2	20.81
				50% RB High	25 Pos 24	23.50	1	21.70	23.50	2	20.72
				100% RB	50 Pos 0	23.50	1	21.71	23.50	2	20.79
	5.0 MHz	23330	793	1RB Low	1 Pos 0	23.50	0	22.74	23.50	1	22.06
				1RB Mid	1 Pos 12	23.50	0	22.78	23.50	1	21.92
				1RB High	1 Pos 24	23.50	0	22.70	23.50	1	21.77
				50% RB Low	12 Pos 0	23.50	1	21.76	23.50	2	20.71
				50% RB Mid	12 Pos 6	23.50	1	21.77	23.50	2	20.73
				50% RB High	12 Pos 11	23.50	1	21.70	23.50	2	20.64
				100% RB	25 Pos 0	23.50	1	21.68	23.50	2	20.70

B.2.2.8 LTE band 17 FDD

SAR Measurement for LTE Band 17 FDD (Frequency range: 704 – 716MHz) is covered by LTE Band 12 FDD (Frequency range: 699 – 716MHz) due to overlapping frequency range, same maximum tune-up and same bandwidth.

B.2.2.9 LTE band 25 FDD

Band	BW	Channel #	Freq (MHz)	% RB Allocation	RB Position	QPSK			16 QAM		
						Factory Upper Tolerance (dBm)	MPR	Measured Output Power (dBm)	Factory Upper Tolerance (dBm)	MPR	Measured Output Power (dBm)
LTE 25	20 MHz	26140	1860.0	1RB Low	1 Pos 0	22.00	0	21.24	22.00	0	21.23
				1RB Mid	1 Pos 50	22.00	0	21.34	22.00	0	21.45
				1RB High	1 Pos 99	22.00	0	21.69	22.00	0	21.72
				50% RB Low	50 Pos 0	22.00	0	21.26	22.00	0	20.75
				50% RB Mid	50 Pos 24	22.00	0	21.42	22.00	0	20.91
				50% RB High	50 Pos 50	22.00	0	21.57	22.00	0	21.06
				100% RB	100 Pos 0	22.00	0	21.54	22.00	0	21.00
		26365	1882.5	1RB Low	1 Pos 0	22.00	0	21.54	22.00	0	21.88
				1RB Mid	1 Pos 50	22.00	0	21.47	22.00	0	21.79
				1RB High	1 Pos 99	22.00	0	21.30	22.00	0	21.39
				50% RB Low	50 Pos 0	22.00	0	21.58	22.00	0	21.09
				50% RB Mid	50 Pos 24	22.00	0	21.43	22.00	0	20.94
				50% RB High	50 Pos 50	22.00	0	21.42	22.00	0	20.91
				100% RB	100 Pos 0	22.00	0	21.32	22.00	0	20.82
		26590	1905.0	1RB Low	1 Pos 0	22.00	0	21.55	22.00	0	21.68
				1RB Mid	1 Pos 50	22.00	0	21.55	22.00	0	21.63
				1RB High	1 Pos 99	22.00	0	21.21	22.00	0	21.38
				50% RB Low	50 Pos 0	22.00	0	21.25	22.00	0	20.78
				50% RB Mid	50 Pos 24	22.00	0	21.54	22.00	0	21.07
				50% RB High	50 Pos 50	22.00	0	21.77	22.00	0	21.25
				100% RB	100 Pos 0	22.00	0	21.85	22.00	0	21.34
	15 MHz	26115	1857.5	1RB Low	1 Pos 0	22.00	0	21.18	22.00	0	21.29
				1RB Mid	1 Pos 38	22.00	0	21.37	22.00	0	21.40
				1RB High	1 Pos 74	22.00	0	21.56	22.00	0	21.58
				50% RB Low	38 Pos 0	22.00	0	21.16	22.00	0	20.69
				50% RB Mid	38 Pos 19	22.00	0	21.37	22.00	0	20.84
				50% RB High	38 Pos 39	22.00	0	21.51	22.00	0	21.00
				100% RB	75 Pos 0	22.00	0	21.41	22.00	0	20.91
		26365	1882.5	1RB Low	1 Pos 0	22.00	0	21.45	22.00	0	21.66
				1RB Mid	1 Pos 38	22.00	0	21.50	22.00	0	21.73
				1RB High	1 Pos 74	22.00	0	21.49	22.00	0	21.67
				50% RB Low	38 Pos 0	22.00	0	21.56	22.00	0	21.09
				50% RB Mid	38 Pos 19	22.00	0	21.48	22.00	0	20.98
				50% RB High	38 Pos 39	22.00	0	21.41	22.00	0	20.92
				100% RB	75 Pos 0	22.00	0	21.45	22.00	0	20.97
		26615	1907.5	1RB Low	1 Pos 0	22.00	0	21.22	22.00	0	21.31
				1RB Mid	1 Pos 38	22.00	0	21.77	22.00	0	21.86
				1RB High	1 Pos 74	22.00	0	21.14	22.00	0	21.19
				50% RB Low	38 Pos 0	22.00	0	21.42	22.00	0	20.91
				50% RB Mid	38 Pos 19	22.00	0	21.74	22.00	0	21.23
				50% RB High	38 Pos 39	22.00	0	21.65	22.00	0	21.16
				100% RB	75 Pos 0	22.00	0	21.74	22.00	0	21.28
	10 MHz	26090	1855.0	1RB Low	1 Pos 0	22.00	0	21.19	22.00	0	21.32
				1RB Mid	1 Pos 24	22.00	0	21.28	22.00	0	21.32
				1RB High	1 Pos 49	22.00	0	21.44	22.00	0	21.70
				50% RB Low	25 Pos 0	22.00	0	21.17	22.00	0	20.69
				50% RB Mid	25 Pos 12	22.00	0	21.28	22.00	0	20.78
				50% RB High	25 Pos 25	22.00	0	21.40	22.00	0	20.89
				100% RB	50 Pos0	22.00	0	21.30	22.00	0	20.82
		26365	1882.5	1RB Low	1 Pos 0	22.00	0	21.41	22.00	0	21.54
				1RB Mid	1 Pos 24	22.00	0	21.51	22.00	0	21.59
				1RB High	1 Pos 49	22.00	0	21.39	22.00	0	21.54
				50% RB Low	25 Pos 0	22.00	0	21.43	22.00	0	20.97
				50% RB Mid	25 Pos 12	22.00	0	21.45	22.00	0	20.95
				50% RB High	25 Pos 25	22.00	0	21.44	22.00	0	20.93
				100% RB	50 Pos0	22.00	0	21.37	22.00	0	20.86
		26640	1910.0	1RB Low	1 Pos 0	22.00	0	21.57	22.00	0	21.67
				1RB Mid	1 Pos 24	22.00	0	21.81	22.00	0	21.96
				1RB High	1 Pos 49	22.00	0	21.20	22.00	0	21.32
				50% RB Low	25 Pos 0	22.00	0	21.59	22.00	0	21.09
				50% RB Mid	25 Pos 12	22.00	0	21.70	22.00	0	21.17
				50% RB High	25 Pos 25	22.00	0	21.45	22.00	0	20.95
				100% RB	50 Pos0	22.00	0	21.62	22.00	0	21.13

Band	BW	Channel #	Freq (MHz)	% RB Allocation	RB Position	QPSK			16 QAM		
						Factory Upper Tolerance (dBm)	MPR	Measured Output Power (dBm)	Factory Upper Tolerance (dBm)	MPR	Measured Output Power (dBm)
LTE25	5 MHz	26065	1852.5	1RB Low	1 Pos 0	22.00	0	21.22	22.00	0	21.43
				1RB Mid	1 Pos 38	22.00	0	21.36	22.00	0	21.52
				1RB High	1 Pos 74	22.00	0	21.42	22.00	0	21.60
				50% RB Low	38 Pos 0	22.00	0	21.19	22.00	0	20.67
				50% RB Mid	38 Pos 19	22.00	0	21.22	22.00	0	20.66
				50% RB High	38 Pos 39	22.00	0	21.30	22.00	0	20.79
				100% RB	75 Pos 0	22.00	0	21.26	22.00	0	20.68
		26365	1882.5	1RB Low	1 Pos 0	22.00	0	21.38	22.00	0	21.54
				1RB Mid	1 Pos 38	22.00	0	21.50	22.00	0	21.59
				1RB High	1 Pos 74	22.00	0	21.55	22.00	0	21.58
				50% RB Low	38 Pos 0	22.00	0	21.33	22.00	0	20.90
				50% RB Mid	38 Pos 19	22.00	0	21.40	22.00	0	20.89
				50% RB High	38 Pos 39	22.00	0	21.39	22.00	0	20.94
				100% RB	75 Pos 0	22.00	0	21.41	22.00	0	20.88
		26665	1912.5	1RB Low	1 Pos 0	22.00	0	21.80	22.00	0	22.00
				1RB Mid	1 Pos 38	22.00	0	21.49	22.00	0	21.61
				1RB High	1 Pos 74	22.00	0	21.07	22.00	0	20.96
				50% RB Low	38 Pos 0	22.00	0	21.55	22.00	0	20.97
				50% RB Mid	38 Pos 19	22.00	0	21.40	22.00	0	20.91
				50% RB High	38 Pos 39	22.00	0	21.16	22.00	0	20.54
				100% RB	75 Pos 0	22.00	0	21.35	22.00	0	20.74
	3 MHz	26055	1851.5	1RB Low	1 Pos 0	22.00	0	21.09	22.00	0	21.44
				1RB Mid	1 Pos 24	22.00	0	21.22	22.00	0	21.35
				1RB High	1 Pos 49	22.00	0	21.24	22.00	0	21.46
				50% RB Low	25 Pos 0	22.00	0	21.10	22.00	0	20.51
				50% RB Mid	25 Pos 12	22.00	0	21.15	22.00	0	20.50
				50% RB High	25 Pos 24	22.00	0	21.23	22.00	0	20.68
				100% RB	50 Pos 0	22.00	0	21.11	22.00	0	20.54
		26365	1882.5	1RB Low	1 Pos 0	22.00	0	21.21	22.00	0	21.59
				1RB Mid	1 Pos 24	22.00	0	21.36	22.00	0	21.57
				1RB High	1 Pos 49	22.00	0	21.38	22.00	0	21.64
				50% RB Low	25 Pos 0	22.00	0	21.24	22.00	0	20.64
				50% RB Mid	25 Pos 12	22.00	0	21.23	22.00	0	20.60
				50% RB High	25 Pos 24	22.00	0	21.29	22.00	0	20.76
				100% RB	50 Pos 0	22.00	0	21.28	22.00	0	20.69
		26675	1913.5	1RB Low	1 Pos 0	22.00	0	21.45	22.00	0	21.62
				1RB Mid	1 Pos 24	22.00	0	21.18	22.00	0	21.47
				1RB High	1 Pos 49	22.00	0	20.97	22.00	0	21.04
				50% RB Low	25 Pos 0	22.00	0	21.21	22.00	0	20.60
				50% RB Mid	25 Pos 12	22.00	0	21.02	22.00	0	20.40
				50% RB High	25 Pos 24	22.00	0	21.00	22.00	0	20.27
				100% RB	50 Pos 0	22.00	0	21.16	22.00	0	20.44
	1.4 MHz	26047	1850.7	1RB Low	1 Pos 0	22.00	0	21.36	22.00	0	21.17
				1RB Mid	1 Pos 12	22.00	0	21.35	22.00	0	21.23
				1RB High	1 Pos 24	22.00	0	21.41	22.00	0	21.61
				50% RB Low	12 Pos 0	22.00	0	21.22	22.00	0	21.17
				50% RB Mid	12 Pos 6	22.00	0	21.26	22.00	0	21.22
				50% RB High	12 Pos 11	22.00	0	21.25	22.00	0	21.32
				100% RB	25 Pos 0	22.00	0	21.20	22.00	0	20.69
		26365	1882.5	1RB Low	1 Pos 0	22.00	0	21.21	22.00	0	21.29
				1RB Mid	1 Pos 12	22.00	0	21.22	22.00	0	21.24
				1RB High	1 Pos 24	22.00	0	21.29	22.00	0	21.22
				50% RB Low	12 Pos 0	22.00	0	21.20	22.00	0	21.09
				50% RB Mid	12 Pos 6	22.00	0	21.18	22.00	0	21.21
				50% RB High	12 Pos 11	22.00	0	21.19	22.00	0	21.19
				100% RB	25 Pos 0	22.00	0	21.04	22.00	0	20.53
		26683	1914.3	1RB Low	1 Pos 0	22.00	0	21.26	22.00	0	21.24
				1RB Mid	1 Pos 12	22.00	0	21.15	22.00	0	21.08
				1RB High	1 Pos 24	22.00	0	21.04	22.00	0	21.11
				50% RB Low	12 Pos 0	22.00	0	21.15	22.00	0	21.07
				50% RB Mid	12 Pos 6	22.00	0	21.12	22.00	0	21.13
				50% RB High	12 Pos 11	22.00	0	21.04	22.00	0	21.09
				100% RB	25 Pos 0	22.00	0	21.02	22.00	0	20.42

B.2.2.10 LTE band 26 FDD

Band	BW	Channel #	Freq (MHz)	% RB Allocation	RB Position	QPSK			16 QAM		
						Factory Upper Tolerance (dBm)	MPR	Measured Output Power (dBm)	Factory Upper Tolerance (dBm)	MPR	Measured Output Power (dBm)
LTE26	15 MHz	26775	821.5	1RB Low	1 Pos 0	23.50	0	22.93	23.50	1	22.16
				1RB Mid	1 Pos 38	23.50	0	22.73	23.50	1	21.95
				1RB High	1 Pos 74	23.50	0	22.86	23.50	1	22.16
				50% RB Low	38 Pos 0	23.50	1	21.95	23.50	2	20.95
				50% RB Mid	38 Pos 19	23.50	1	21.72	23.50	2	20.69
				50% RB High	38 Pos 39	23.50	1	21.85	23.50	2	20.84
				100% RB	75 Pos 0	23.50	1	21.69	23.50	2	20.69
		26865	831.5	1RB Low	1 Pos 0	23.50	0	22.85	23.50	1	22.06
				1RB Mid	1 Pos 38	23.50	0	22.88	23.50	1	22.12
				1RB High	1 Pos 74	23.50	0	22.93	23.50	1	22.18
				50% RB Low	38 Pos 0	23.50	1	21.88	23.50	2	20.87
				50% RB Mid	38 Pos 19	23.50	1	21.85	23.50	2	20.88
				50% RB High	38 Pos 39	23.50	1	21.96	23.50	2	20.95
				100% RB	75 Pos 0	23.50	1	21.93	23.50	2	20.92
		26965	841.5	1RB Low	1 Pos 0	23.50	0	22.94	23.50	1	21.99
				1RB Mid	1 Pos 38	23.50	0	22.71	23.50	1	21.73
				1RB High	1 Pos 74	23.50	0	22.60	23.50	1	21.70
				50% RB Low	38 Pos 0	23.50	1	21.89	23.50	2	20.86
				50% RB Mid	38 Pos 19	23.50	1	21.75	23.50	2	20.67
				50% RB High	38 Pos 39	23.50	1	21.69	23.50	2	20.68
				100% RB	75 Pos 0	23.50	1	21.72	23.50	2	20.69
	10 MHz	26750	820	1RB Low	1 Pos 0	23.50	0	22.92	23.50	1	22.11
				1RB Mid	1 Pos 24	23.50	0	22.87	23.50	1	22.05
				1RB High	1 Pos 49	23.50	0	22.80	23.50	1	22.01
				50% RB Low	25 Pos 0	23.50	1	21.89	23.50	2	20.87
				50% RB Mid	25 Pos 12	23.50	1	21.86	23.50	2	20.83
				50% RB High	25 Pos 24	23.50	1	21.68	23.50	2	20.66
				100% RB	50 Pos 0	23.50	1	21.82	23.50	2	20.81
		26865	831.5	1RB Low	1 Pos 0	23.50	0	22.91	23.50	1	22.06
				1RB Mid	1 Pos 24	23.50	0	22.86	23.50	1	21.89
				1RB High	1 Pos 49	23.50	0	23.02	23.50	1	22.16
				50% RB Low	25 Pos 0	23.50	1	21.88	23.50	2	20.90
				50% RB Mid	25 Pos 12	23.50	1	21.83	23.50	2	20.87
				50% RB High	25 Pos 24	23.50	1	21.92	23.50	2	20.97
				100% RB	50 Pos 0	23.50	1	21.87	23.50	2	20.87
		26990	844	1RB Low	1 Pos 0	23.50	0	22.80	23.50	1	22.02
				1RB Mid	1 Pos 24	23.50	0	22.67	23.50	1	21.75
				1RB High	1 Pos 49	23.50	0	22.64	23.50	1	21.75
				50% RB Low	25 Pos 0	23.50	1	21.72	23.50	2	20.69
				50% RB Mid	25 Pos 12	23.50	1	21.70	23.50	2	20.66
				50% RB High	25 Pos 24	23.50	1	21.66	23.50	2	20.65
				100% RB	50 Pos 0	23.50	1	21.69	23.50	2	20.69
	5.0 MHz	26715	816.5	1RB Low	1 Pos 0	23.50	0	22.90	23.50	1	21.86
				1RB Mid	1 Pos 12	23.50	0	22.85	23.50	1	21.92
				1RB High	1 Pos 24	23.50	0	22.97	23.50	1	22.05
				50% RB Low	12 Pos 0	23.50	1	21.85	23.50	2	20.88
				50% RB Mid	12 Pos 6	23.50	1	21.78	23.50	2	20.75
				50% RB High	12 Pos 11	23.50	1	21.85	23.50	2	20.88
				100% RB	25 Pos 0	23.50	1	21.82	23.50	2	20.82
		26865	831.5	1RB Low	1 Pos 0	23.50	0	22.86	23.50	1	21.91
				1RB Mid	1 Pos 12	23.50	0	22.82	23.50	1	22.09
				1RB High	1 Pos 24	23.50	0	22.92	23.50	1	22.12
				50% RB Low	12 Pos 0	23.50	1	21.81	23.50	2	20.84
				50% RB Mid	12 Pos 6	23.50	1	21.79	23.50	2	20.84
				50% RB High	12 Pos 11	23.50	1	21.87	23.50	2	20.93
				100% RB	25 Pos 0	23.50	1	21.82	23.50	2	20.84
		27015	846.5	1RB Low	1 Pos 0	23.50	0	22.68	23.50	1	21.49
				1RB Mid	1 Pos 12	23.50	0	22.65	23.50	1	21.84
				1RB High	1 Pos 24	23.50	0	22.60	23.50	1	21.77
				50% RB Low	12 Pos 0	23.50	1	21.66	23.50	2	20.67
				50% RB Mid	12 Pos 6	23.50	1	21.62	23.50	2	20.55
				50% RB High	12 Pos 11	23.50	1	21.63	23.50	2	20.53
				100% RB	25 Pos 0	23.50	1	21.64	23.50	2	20.59

Band	BW	Channel #	Freq (MHz)	% RB Allocation	RB Position	QPSK			16 QAM		
						Factory Upper Tolerance (dBm)	MPR	Measured Output Power (dBm)	Factory Upper Tolerance (dBm)	MPR	Measured Output Power (dBm)
LTE26	3.0 MHz	26705	815.5	1RB Low	1 Pos 0	23.50	0	22.83	23.50	1	22.01
				1RB Mid	1 Pos 7	23.50	0	22.90	23.50	1	22.14
				1RB High	1 Pos 14	23.50	0	22.85	23.50	1	22.16
				50% RB Low	8 Pos 0	23.50	1	21.89	23.50	2	20.88
				50% RB Mid	8 Pos 4	23.50	1	21.88	23.50	2	20.98
				50% RB High	8 Pos 7	23.50	1	21.84	23.50	2	20.87
				100% RB	15 Pos 0	23.50	1	21.90	23.50	2	20.89
		26865	831.5	1RB Low	1 Pos 0	23.50	0	22.81	23.50	1	22.05
				1RB Mid	1 Pos 7	23.50	0	22.84	23.50	1	21.97
				1RB High	1 Pos 14	23.50	0	22.87	23.50	1	22.14
				50% RB Low	8 Pos 0	23.50	1	21.83	23.50	2	20.86
				50% RB Mid	8 Pos 4	23.50	1	21.81	23.50	2	20.92
				50% RB High	8 Pos 7	23.50	1	21.91	23.50	2	20.93
				100% RB	15 Pos 0	23.50	1	21.84	23.50	2	20.82
		27025	847.5	1RB Low	1 Pos 0	23.50	0	22.61	23.50	1	21.89
				1RB Mid	1 Pos 7	23.50	0	22.66	23.50	1	21.90
				1RB High	1 Pos 14	23.50	0	22.71	23.50	1	21.72
				50% RB Low	8 Pos 0	23.50	1	21.64	23.50	2	20.65
				50% RB Mid	8 Pos 4	23.50	1	21.66	23.50	2	20.61
				50% RB High	8 Pos 7	23.50	1	21.58	23.50	2	20.59
				100% RB	15 Pos 0	23.50	1	21.73	23.50	2	20.66
	1.4 MHz	26697	814.7	1RB Low	1 Pos 0	23.50	0	22.99	23.50	1	22.01
				1RB Mid	1 Pos 2	23.50	0	22.93	23.50	1	21.94
				1RB High	1 Pos 5	23.50	0	22.94	23.50	1	21.89
				50% RB Low	3 Pos 0	23.50	1	22.87	23.50	2	22.02
				50% RB Mid	3 Pos 1	23.50	1	22.86	23.50	2	21.91
				50% RB High	3 Pos 2	23.50	1	22.86	23.50	2	21.97
				100% RB	6 Pos 0	23.50	1	21.88	23.50	2	20.91
		26865	831.5	1RB Low	1 Pos 0	23.50	0	22.91	23.50	1	21.87
				1RB Mid	1 Pos 2	23.50	0	22.87	23.50	1	21.88
				1RB High	1 Pos 5	23.50	0	22.90	23.50	1	21.83
				50% RB Low	3 Pos 0	23.50	1	22.84	23.50	2	21.93
				50% RB Mid	3 Pos 1	23.50	1	22.83	23.50	2	21.92
				50% RB High	3 Pos 2	23.50	1	22.80	23.50	2	21.79
				100% RB	6 Pos 0	23.50	1	21.84	23.50	2	20.88
		27033	848.3	1RB Low	1 Pos 0	23.50	0	22.74	23.50	1	21.79
				1RB Mid	1 Pos 2	23.50	0	22.65	23.50	1	21.60
				1RB High	1 Pos 5	23.50	0	22.71	23.50	1	21.84
				50% RB Low	3 Pos 0	23.50	1	22.61	23.50	2	21.66
				50% RB Mid	3 Pos 1	23.50	1	22.65	23.50	2	21.62
				50% RB High	3 Pos 2	23.50	1	22.64	23.50	2	21.57
				100% RB	6 Pos 0	23.50	1	21.67	23.50	2	20.56

B.2.2.11 LTE band 30 FDD

Band	BW	Channel #	Freq (MHz)	% RB Allocation	RB Position	QPSK			16 QAM		
						Factory Upper Tolerance (dBm)	MPR	Measured Output Power (dBm)	Factory Upper Tolerance (dBm)	MPR	Measured Output Power (dBm)
LTE30	10 MHz	27710	2310	1RB Low	1 Pos 0	21.00	0	20.11	21.00	0	20.34
				1RB Mid	1 Pos 24	21.00	0	20.46	21.00	0	20.70
				1RB High	1 Pos 49	21.00	0	20.30	21.00	0	20.39
				50% RB Low	25 Pos 0	21.00	0	20.07	21.00	0	20.04
				50% RB Mid	25 Pos 12	21.00	0	20.43	21.00	0	20.40
				50% RB High	25 Pos 24	21.00	0	20.42	21.00	0	20.42
				100% RB	50 Pos 0	21.00	0	20.42	21.00	0	20.47
	5.0 MHz	27710	2310	1RB Low	1 Pos 0	21.00	0	20.04	21.00	0	20.15
				1RB Mid	1 Pos 12	21.00	0	20.00	21.00	0	20.11
				1RB High	1 Pos 24	21.00	0	20.37	21.00	0	20.42
				50% RB Low	12 Pos 0	21.00	0	19.84	21.00	0	19.79
				50% RB Mid	12 Pos 6	21.00	0	19.82	21.00	0	19.81
				50% RB High	12 Pos 11	21.00	0	20.01	21.00	0	19.97
				100% RB	25 Pos 0	21.00	0	19.83	21.00	0	19.83

B.2.2.12 LTE band 38 FDD

SAR Measurement for LTE Band 38 TDD (Frequency range: 2570 – 2620MHz) is covered by LTE Band 41 TDD (Frequency range: 2496 – 2690MHz) due to overlapping frequency range, same maximum tune-up and same bandwidth.

B.2.2.13 LTE band 41 TDD

Band	BW	Channel #	Freq (MHz)	% RB Allocation	RB Position	QPSK			16 QAM		
						Factory Upper Tolerance (dBm)	MPR	Measured Output Power (dBm)	Factory Upper Tolerance (dBm)	MPR	Measured Output Power (dBm)
LTE41	20 MHz	39750	2506	1RB Low	1 Pos 0	20.00	0	19.35	20.00	0	19.56
				1RB Mid	1 Pos 50	20.00	0	19.36	20.00	0	19.62
				1RB High	1 Pos 99	20.00	0	19.23	20.00	0	19.46
				50% RB Low	50 Pos 0	20.00	0	19.28	20.00	0	19.30
				50% RB Mid	50 Pos 24	20.00	0	19.29	20.00	0	19.30
				50% RB High	50 Pos 50	20.00	0	19.32	20.00	0	19.32
				100% RB	100 Pos 0	20.00	0	19.30	20.00	0	19.30
		40185	2549.5	1RB Low	1 Pos 0	20.00	0	19.48	20.00	0	19.64
				1RB Mid	1 Pos 50	20.00	0	19.63	20.00	0	20.00
				1RB High	1 Pos 99	20.00	0	19.66	20.00	0	19.95
				50% RB Low	50 Pos 0	20.00	0	19.45	20.00	0	19.48
				50% RB Mid	50 Pos 24	20.00	0	19.57	20.00	0	19.60
				50% RB High	50 Pos 50	20.00	0	19.57	20.00	0	19.61
				100% RB	100 Pos 0	20.00	0	19.58	20.00	0	19.61
		40620	2593	1RB Low	1 Pos 0	20.00	0	19.58	20.00	0	19.66
				1RB Mid	1 Pos 50	20.00	0	19.41	20.00	0	19.65
				1RB High	1 Pos 99	20.00	0	19.35	20.00	0	19.48
				50% RB Low	50 Pos 0	20.00	0	19.50	20.00	0	19.53
				50% RB Mid	50 Pos 24	20.00	0	19.44	20.00	0	19.46
				50% RB High	50 Pos 50	20.00	0	19.34	20.00	0	19.38
				100% RB	100 Pos 0	20.00	0	19.40	20.00	0	19.42
		41055	2636.5	1RB Low	1 Pos 0	20.00	0	19.59	20.00	0	19.82
				1RB Mid	1 Pos 50	20.00	0	19.61	20.00	0	19.87
				1RB High	1 Pos 99	20.00	0	19.56	20.00	0	19.75
				50% RB Low	50 Pos 0	20.00	0	19.59	20.00	0	19.61
				50% RB Mid	50 Pos 24	20.00	0	19.57	20.00	0	19.59
				50% RB High	50 Pos 50	20.00	0	19.55	20.00	0	19.57
				100% RB	100 Pos 0	20.00	0	19.58	20.00	0	19.58
		41490	2680	1RB Low	1 Pos 0	20.00	0	19.65	20.00	0	19.85
				1RB Mid	1 Pos 50	20.00	0	19.73	20.00	0	19.90
				1RB High	1 Pos 99	20.00	0	19.75	20.00	0	19.91
				50% RB Low	50 Pos 0	20.00	0	19.66	20.00	0	19.65
				50% RB Mid	50 Pos 24	20.00	0	19.72	20.00	0	19.71
				50% RB High	50 Pos 50	20.00	0	19.75	20.00	0	19.73
				100% RB	100 Pos 0	20.00	0	19.75	20.00	0	19.75

Band	BW	Channel #	Freq (MHz)	% RB Allocation	RB Position	QPSK			16 QAM		
						Factory Upper Tolerance (dBm)	MPR	Measured Output Power (dBm)	Factory Upper Tolerance (dBm)	MPR	Measured Output Power (dBm)
LTE41	15 MHz	39750	2506	1RB Low	1 Pos 0	20.00	0	19.43	20.00	0	19.58
				1RB Mid	1 Pos 38	20.00	0	19.43	20.00	0	19.65
				1RB High	1 Pos 74	20.00	0	19.38	20.00	0	19.67
				50% RB Low	38 Pos 0	20.00	0	19.33	20.00	0	19.37
				50% RB Mid	38 Pos 19	20.00	0	19.35	20.00	0	19.39
				50% RB High	38 Pos 39	20.00	0	19.34	20.00	0	19.36
				100% RB	75 Pos 0	20.00	0	19.33	20.00	0	19.34
		40185	2549.5	1RB Low	1 Pos 0	20.00	0	19.47	20.00	0	19.46
				1RB Mid	1 Pos 38	20.00	0	19.64	20.00	0	19.79
				1RB High	1 Pos 74	20.00	0	19.65	20.00	0	19.78
				50% RB Low	38 Pos 0	20.00	0	19.48	20.00	0	19.50
				50% RB Mid	38 Pos 19	20.00	0	19.60	20.00	0	19.65
				50% RB High	38 Pos 39	20.00	0	19.57	20.00	0	19.62
				100% RB	75 Pos 0	20.00	0	19.59	20.00	0	19.61
		40620	2593	1RB Low	1 Pos 0	20.00	0	19.57	20.00	0	19.70
				1RB Mid	1 Pos 38	20.00	0	19.45	20.00	0	19.56
				1RB High	1 Pos 74	20.00	0	19.36	20.00	0	19.53
				50% RB Low	38 Pos 0	20.00	0	19.48	20.00	0	19.52
				50% RB Mid	38 Pos 19	20.00	0	19.45	20.00	0	19.51
				50% RB High	38 Pos 39	20.00	0	19.36	20.00	0	19.40
				100% RB	75 Pos 0	20.00	0	19.40	20.00	0	19.44
		41055	2636.5	1RB Low	1 Pos 0	20.00	0	19.62	20.00	0	19.65
				1RB Mid	1 Pos 38	20.00	0	19.66	20.00	0	19.59
				1RB High	1 Pos 74	20.00	0	19.55	20.00	0	19.65
				50% RB Low	38 Pos 0	20.00	0	19.56	20.00	0	19.56
				50% RB Mid	38 Pos 19	20.00	0	19.59	20.00	0	19.61
				50% RB High	38 Pos 39	20.00	0	19.54	20.00	0	19.54
				100% RB	75 Pos 0	20.00	0	19.58	20.00	0	19.59
		41490	2680.0	1RB Low	1 Pos 0	20.00	0	19.59	20.00	0	19.64
				1RB Mid	1 Pos 38	20.00	0	19.73	20.00	0	19.70
				1RB High	1 Pos 74	20.00	0	19.66	20.00	0	19.63
				50% RB Low	38 Pos 0	20.00	0	19.65	20.00	0	19.63
				50% RB Mid	38 Pos 19	20.00	0	19.72	20.00	0	19.74
				50% RB High	38 Pos 39	20.00	0	19.70	20.00	0	19.72
				100% RB	75 Pos 0	20.00	0	19.72	20.00	0	19.72

Band	BW	Channel #	Freq (MHz)	% RB Allocation	RB Position	QPSK			16 QAM		
						Factory Upper Tolerance (dBm)	MPR	Measured Output Power (dBm)	Factory Upper Tolerance (dBm)	MPR	Measured Output Power (dBm)
LTE41	10 MHz	39750	2506	1RB Low	1 Pos 0	20.00	0	19.39	20.00	0	19.69
				1RB Mid	1 Pos 24	20.00	0	19.41	20.00	0	19.79
				1RB High	1 Pos 49	20.00	0	19.43	20.00	0	19.51
				50% RB Low	25 Pos 0	20.00	0	19.32	20.00	0	19.37
				50% RB Mid	25 Pos 12	20.00	0	19.33	20.00	0	19.37
				50% RB High	25 Pos 24	20.00	0	19.35	20.00	0	19.39
				100% RB	50 Pos 0	20.00	0	19.33	20.00	0	19.31
		40185	2549.5	1RB Low	1 Pos 0	20.00	0	19.51	20.00	0	19.62
				1RB Mid	1 Pos 24	20.00	0	19.60	20.00	0	19.84
				1RB High	1 Pos 49	20.00	0	19.62	20.00	0	19.64
				50% RB Low	25 Pos 0	20.00	0	19.49	20.00	0	19.52
				50% RB Mid	25 Pos 12	20.00	0	19.58	20.00	0	19.63
				50% RB High	25 Pos 24	20.00	0	19.61	20.00	0	19.65
				100% RB	50 Pos 0	20.00	0	19.58	20.00	0	19.61
		40620	2593	1RB Low	1 Pos 0	20.00	0	19.54	20.00	0	19.66
				1RB Mid	1 Pos 24	20.00	0	19.45	20.00	0	19.58
				1RB High	1 Pos 49	20.00	0	19.40	20.00	0	19.48
				50% RB Low	25 Pos 0	20.00	0	19.44	20.00	0	19.51
				50% RB Mid	25 Pos 12	20.00	0	19.41	20.00	0	19.48
				100% RB	50 Pos 0	20.00	0	19.36	20.00	0	19.39
				1RB Low	1 Pos 0	20.00	0	19.36	20.00	0	19.38
		41055	2636.5	1RB Mid	1 Pos 24	20.00	0	19.60	20.00	0	19.74
				1RB High	1 Pos 49	20.00	0	19.57	20.00	0	19.89
				50% RB Low	25 Pos 0	20.00	0	19.56	20.00	0	19.73
				50% RB Mid	25 Pos 12	20.00	0	19.53	20.00	0	19.56
				100% RB	50 Pos 0	20.00	0	19.54	20.00	0	19.57
				1RB Low	1 Pos 0	20.00	0	19.56	20.00	0	19.59
				1RB Mid	1 Pos 24	20.00	0	19.55	20.00	0	19.55
		41490	2680	1RB High	1 Pos 49	20.00	0	19.67	20.00	0	19.73
				50% RB Low	25 Pos 0	20.00	0	19.70	20.00	0	19.70
				50% RB Mid	25 Pos 12	20.00	0	19.76	20.00	0	19.85
				100% RB	50 Pos 0	20.00	0	19.67	20.00	0	19.65
				1RB Low	1 Pos 0	20.00	0	19.69	20.00	0	19.70
				1RB Mid	1 Pos 24	20.00	0	19.74	20.00	0	19.72
				1RB High	1 Pos 49	20.00	0	19.71	20.00	0	19.69

Band	BW	Channel #	Freq (MHz)	% RB Allocation	RB Position	QPSK			16 QAM		
						Factory Upper Tolerance (dBm)	MPR	Measured Output Power (dBm)	Factory Upper Tolerance (dBm)	MPR	Measured Output Power (dBm)
LTE41	5.0 MHz	39750	2506	1RB Low	1 Pos 0	20.00	0	19.38	20.00	0	19.59
				1RB Mid	1 Pos 12	20.00	0	19.44	20.00	0	19.76
				1RB High	1 Pos 24	20.00	0	19.40	20.00	0	19.70
				50% RB Low	12 Pos 0	20.00	0	19.24	20.00	0	19.28
				50% RB Mid	12 Pos 6	20.00	0	19.26	20.00	0	19.26
				50% RB High	12 Pos 11	20.00	0	19.26	20.00	0	19.24
				100% RB	25 Pos 0	20.00	0	19.25	20.00	0	19.25
		40185	2549.5	1RB Low	1 Pos 0	20.00	0	19.47	20.00	0	19.58
				1RB Mid	1 Pos 12	20.00	0	19.59	20.00	0	19.59
				1RB High	1 Pos 24	20.00	0	19.65	20.00	0	19.54
				50% RB Low	12 Pos 0	20.00	0	19.45	20.00	0	19.45
				50% RB Mid	12 Pos 6	20.00	0	19.47	20.00	0	19.48
				50% RB High	12 Pos 11	20.00	0	19.49	20.00	0	19.48
				100% RB	25 Pos 0	20.00	0	19.47	20.00	0	19.49
		40620	2593	1RB Low	1 Pos 0	20.00	0	19.49	20.00	0	19.58
				1RB Mid	1 Pos 12	20.00	0	19.36	20.00	0	19.62
				1RB High	1 Pos 24	20.00	0	19.39	20.00	0	19.50
				50% RB Low	12 Pos 0	20.00	0	19.35	20.00	0	19.32
				50% RB Mid	12 Pos 6	20.00	0	19.33	20.00	0	19.32
				50% RB High	12 Pos 11	20.00	0	19.27	20.00	0	19.26
				100% RB	25 Pos 0	20.00	0	19.28	20.00	0	19.24
		41055	2636.5	1RB Low	1 Pos 0	20.00	0	19.56	20.00	0	19.73
				1RB Mid	1 Pos 12	20.00	0	19.58	20.00	0	19.59
				1RB High	1 Pos 24	20.00	0	19.65	20.00	0	19.75
				50% RB Low	12 Pos 0	20.00	0	19.46	20.00	0	19.41
				50% RB Mid	12 Pos 6	20.00	0	19.49	20.00	0	19.50
				50% RB High	12 Pos 11	20.00	0	19.47	20.00	0	19.51
				100% RB	25 Pos 0	20.00	0	19.47	20.00	0	19.50
		41490	2680	1RB Low	1 Pos 0	20.00	0	19.62	20.00	0	19.80
				1RB Mid	1 Pos 12	20.00	0	19.62	20.00	0	19.77
				1RB High	1 Pos 24	20.00	0	19.65	20.00	0	19.69
				50% RB Low	12 Pos 0	20.00	0	19.55	20.00	0	19.45
				50% RB Mid	12 Pos 6	20.00	0	19.57	20.00	0	19.55
				50% RB High	12 Pos 11	20.00	0	19.58	20.00	0	19.54
				100% RB	25 Pos 0	20.00	0	19.58	20.00	0	19.55

B.2.2.14 LTE band 48 TDD

Band	BW	Channel #	Freq (MHz)	% RB Allocation	RB Position	QPSK			16 QAM		
						Factory Upper Tolerance (dBm)	MPR	Measured Output Power (dBm)	Factory Upper Tolerance (dBm)	MPR	Measured Output Power (dBm)
LTE 48	20 MHz	55340	3560	1RB Low	1 Pos 0	22.00	0	21.31	22.00	1	20.88
				1RB Mid	1 Pos 50	22.00	0	21.51	22.00	1	20.99
				1RB High	1 Pos 99	22.00	0	21.50	22.00	1	21.00
				50% RB Low	50 Pos 0	22.00	1	20.46	22.00	2	19.47
				50% RB Mid	50 Pos 24	22.00	1	20.52	22.00	2	19.52
				50% RB High	50 Pos 50	22.00	1	20.51	22.00	2	19.53
				100% RB	100 Pos 0	22.00	1	20.51	22.00	2	19.56
		55990	3625	1RB Low	1 Pos 0	22.00	0	21.49	22.00	1	20.91
				1RB Mid	1 Pos 50	22.00	0	21.58	22.00	1	21.00
				1RB High	1 Pos 99	22.00	0	21.48	22.00	1	20.96
				50% RB Low	50 Pos 0	22.00	1	20.54	22.00	2	19.53
				50% RB Mid	50 Pos 24	22.00	1	20.48	22.00	2	19.49
				50% RB High	50 Pos 50	22.00	1	20.52	22.00	2	19.51
				100% RB	100 Pos 0	22.00	1	20.48	22.00	2	19.49
		56640	3690	1RB Low	1 Pos 0	22.00	0	21.27	22.00	1	20.64
				1RB Mid	1 Pos 50	22.00	0	21.34	22.00	1	20.77
				1RB High	1 Pos 99	22.00	0	21.33	22.00	1	20.72
				50% RB Low	50 Pos 0	22.00	1	20.33	22.00	2	19.30
				50% RB Mid	50 Pos 24	22.00	1	20.34	22.00	2	19.32
				50% RB High	50 Pos 50	22.00	1	20.38	22.00	2	19.35
				100% RB	100 Pos 0	22.00	1	20.34	22.00	2	19.33
	15 MHz	55315	3557.5	1RB Low	1 Pos 0	22.00	0	21.34	22.00	1	20.76
				1RB Mid	1 Pos 38	22.00	0	21.45	22.00	1	20.86
				1RB High	1 Pos 74	22.00	0	21.53	22.00	1	20.92
				50% RB Low	38 Pos 0	22.00	1	20.39	22.00	2	19.36
				50% RB Mid	38 Pos 19	22.00	1	20.46	22.00	2	19.44
				50% RB High	38 Pos 39	22.00	1	20.51	22.00	2	19.50
				100% RB	75 Pos 0	22.00	1	20.44	22.00	2	19.44
		55990	3625	1RB Low	1 Pos 0	22.00	0	21.39	22.00	1	20.87
				1RB Mid	1 Pos 38	22.00	0	21.35	22.00	1	20.85
				1RB High	1 Pos 74	22.00	0	21.33	22.00	1	20.83
				50% RB Low	38 Pos 0	22.00	1	20.50	22.00	2	19.50
				50% RB Mid	38 Pos 19	22.00	1	20.54	22.00	2	19.54
				50% RB High	38 Pos 39	22.00	1	20.47	22.00	2	19.46
				100% RB	75 Pos 0	22.00	1	20.45	22.00	2	19.45
		56665	3692.5	1RB Low	1 Pos 0	22.00	0	21.29	22.00	1	20.75
				1RB Mid	1 Pos 38	22.00	0	21.44	22.00	1	20.82
				1RB High	1 Pos 74	22.00	0	21.31	22.00	1	20.68
				50% RB Low	38 Pos 0	22.00	1	20.32	22.00	2	19.32
				50% RB Mid	38 Pos 19	22.00	1	20.42	22.00	2	19.43
				50% RB High	38 Pos 39	22.00	1	20.37	22.00	2	19.36
				100% RB	75 Pos 0	22.00	1	20.39	22.00	2	19.43
	10 MHz	55290	3555	1RB Low	1 Pos 0	22.00	0	14.44	22.00	1	14.82
				1RB Mid	1 Pos 24	22.00	0	21.36	22.00	1	20.75
				1RB High	1 Pos 49	22.00	0	21.41	22.00	1	20.81
				50% RB Low	25 Pos 0	22.00	1	21.57	22.00	2	20.96
				50% RB Mid	25 Pos 12	22.00	1	20.40	22.00	2	19.40
				50% RB High	25 Pos 25	22.00	1	20.39	22.00	2	19.38
				100% RB	50 Pos0	22.00	1	20.45	22.00	2	19.49
		55990	3625	1RB Low	1 Pos 0	22.00	0	20.38	22.00	1	19.38
				1RB Mid	1 Pos 24	22.00	0	21.60	22.00	1	20.96
				1RB High	1 Pos 49	22.00	0	21.56	22.00	1	20.93
				50% RB Low	25 Pos 0	22.00	1	21.54	22.00	2	20.94
				50% RB Mid	25 Pos 12	22.00	1	20.53	22.00	2	19.55
				50% RB High	25 Pos 25	22.00	1	20.53	22.00	2	19.52
				100% RB	50 Pos0	22.00	1	20.48	22.00	2	19.49
		56690	3695	1RB Low	1 Pos 0	22.00	0	20.47	22.00	1	19.45
				1RB Mid	1 Pos 24	22.00	0	21.26	22.00	1	20.54
				1RB High	1 Pos 49	22.00	0	21.24	22.00	1	20.60
				50% RB Low	25 Pos 0	22.00	1	21.21	22.00	2	20.48
				50% RB Mid	25 Pos 12	22.00	1	20.32	22.00	2	19.35
				50% RB High	25 Pos 25	22.00	1	20.25	22.00	2	19.28
				100% RB	50 Pos0	22.00	1	20.20	22.00	2	19.25

Band	BW	Channel #	Freq (MHz)	% RB Allocation	RB Position	QPSK			16 QAM		
						Factory Upper Tolerance (dBm)	MPR	Measured Output Power (dBm)	Factory Upper Tolerance (dBm)	MPR	Measured Output Power (dBm)
LTE 48	5 MHz	55265	3552.5	1RB Low	1 Pos 0	22.00	0	21.34	22.00	1	20.79
				1RB Mid	1 Pos 12	22.00	0	21.40	22.00	1	20.91
				1RB High	1 Pos 24	22.00	0	21.41	22.00	1	20.90
				50% RB Low	12 Pos 0	22.00	1	20.10	22.00	2	19.06
				50% RB Mid	12 Pos 6	22.00	1	20.11	22.00	2	19.13
				50% RB High	12 Pos 11	22.00	1	20.18	22.00	2	19.12
				100% RB	25 Pos 0	22.00	1	20.24	22.00	2	19.09
		55990	3625	1RB Low	1 Pos 0	22.00	0	21.58	22.00	1	20.99
				1RB Mid	1 Pos 12	22.00	0	21.49	22.00	1	20.93
				1RB High	1 Pos 24	22.00	0	21.52	22.00	1	21.00
				50% RB Low	12 Pos 0	22.00	1	20.36	22.00	2	19.31
				50% RB Mid	12 Pos 6	22.00	1	20.37	22.00	2	19.32
				50% RB High	12 Pos 11	22.00	1	20.31	22.00	2	19.24
				100% RB	25 Pos 0	22.00	1	20.38	22.00	2	19.25
		56715	3697.5	1RB Low	1 Pos 0	22.00	0	21.37	22.00	1	20.88
				1RB Mid	1 Pos 12	22.00	0	21.32	22.00	1	20.85
				1RB High	1 Pos 24	22.00	0	21.28	22.00	1	20.74
				50% RB Low	12 Pos 0	22.00	1	20.14	22.00	2	19.09
				50% RB Mid	12 Pos 6	22.00	1	20.06	22.00	2	19.03
				50% RB High	12 Pos 11	22.00	1	20.07	22.00	2	19.06
				100% RB	25 Pos 0	22.00	1	20.14	22.00	2	19.02

B.2.2.15 LTE band 66 FDD

Band	BW	Channel #	Freq (MHz)	% RB Allocation	RB Position	QPSK			16 QAM		
						Factory Upper Tolerance (dBm)	MPR	Measured Output Power (dBm)	Factory Upper Tolerance (dBm)	MPR	Measured Output Power (dBm)
LTE66	20 MHz	132072	1720	1RB Low	1 Pos 0	19.50	0	19.13	19.50	0	19.33
				1RB Mid	1 Pos 50	19.50	0	19.13	19.50	0	19.26
				1RB High	1 Pos 99	19.50	0	18.97	19.50	0	19.05
				50% RB Low	50 Pos 0	19.50	0	19.21	19.50	0	19.23
				50% RB Mid	50 Pos 24	19.50	0	19.16	19.50	0	19.17
				50% RB High	50 Pos 50	19.50	0	19.04	19.50	0	19.06
				100% RB	100 Pos 0	19.50	0	19.12	19.50	0	19.09
		132322	1745	1RB Low	1 Pos 0	19.50	0	19.25	19.50	0	19.50
				1RB Mid	1 Pos 50	19.50	0	18.87	19.50	0	19.04
				1RB High	1 Pos 99	19.50	0	18.67	19.50	0	18.81
				50% RB Low	50 Pos 0	19.50	0	19.01	19.50	0	19.02
				50% RB Mid	50 Pos 24	19.50	0	18.82	19.50	0	18.84
				50% RB High	50 Pos 50	19.50	0	18.76	19.50	0	18.80
				100% RB	100 Pos 0	19.50	0	18.82	19.50	0	18.83
		132572	1770	1RB Low	1 Pos 0	19.50	0	18.81	19.50	0	18.90
				1RB Mid	1 Pos 50	19.50	0	18.83	19.50	0	18.91
				1RB High	1 Pos 99	19.50	0	18.82	19.50	0	18.90
				50% RB Low	50 Pos 0	19.50	0	18.70	19.50	0	18.70
				50% RB Mid	50 Pos 24	19.50	0	18.82	19.50	0	18.80
				50% RB High	50 Pos 50	19.50	0	18.88	19.50	0	18.85
				100% RB	100 Pos 0	19.50	0	18.96	19.50	0	18.94
	15 MHz	132047	1717.5	1RB Low	1 Pos 0	19.50	0	19.10	19.50	0	19.35
				1RB Mid	1 Pos 38	19.50	0	19.15	19.50	0	19.50
				1RB High	1 Pos 74	19.50	0	19.01	19.50	0	19.19
				50% RB Low	38 Pos 0	19.50	0	19.22	19.50	0	19.24
				50% RB Mid	38 Pos 19	19.50	0	19.15	19.50	0	19.18
				50% RB High	38 Pos 39	19.50	0	19.08	19.50	0	19.10
				100% RB	75 Pos 0	19.50	0	19.15	19.50	0	19.13
		132422	1755	1RB Low	1 Pos 0	19.50	0	19.12	19.50	0	19.26
				1RB Mid	1 Pos 38	19.50	0	18.85	19.50	0	19.00
				1RB High	1 Pos 74	19.50	0	18.71	19.50	0	18.81
				50% RB Low	38 Pos 0	19.50	0	19.02	19.50	0	19.03
				50% RB Mid	38 Pos 19	19.50	0	18.86	19.50	0	18.87
				50% RB High	38 Pos 39	19.50	0	18.81	19.50	0	18.82
				100% RB	75 Pos 0	19.50	0	18.83	19.50	0	18.84
		132597	1772.5	1RB Low	1 Pos 0	19.50	0	18.69	19.50	0	18.73
				1RB Mid	1 Pos 38	19.50	0	18.81	19.50	0	18.86
				1RB High	1 Pos 74	19.50	0	18.78	19.50	0	18.92
				50% RB Low	38 Pos 0	19.50	0	18.77	19.50	0	18.79
				50% RB Mid	38 Pos 19	19.50	0	18.83	19.50	0	18.83
				50% RB High	38 Pos 39	19.50	0	18.79	19.50	0	18.82
				100% RB	75 Pos 0	19.50	0	18.87	19.50	0	18.86
	10 MHz	132022	1715	1RB Low	1 Pos 0	19.50	0	19.14	19.50	0	19.18
				1RB Mid	1 Pos 24	19.50	0	19.21	19.50	0	19.41
				1RB High	1 Pos 49	19.50	0	19.24	19.50	0	19.15
				50% RB Low	25 Pos 0	19.50	0	19.17	19.50	0	19.24
				50% RB Mid	25 Pos 12	19.50	0	19.15	19.50	0	19.20
				50% RB High	25 Pos 24	19.50	0	19.15	19.50	0	19.19
				100% RB	50 Pos 0	19.50	0	19.15	19.50	0	19.18
		132422	1755	1RB Low	1 Pos 0	19.50	0	19.07	19.50	0	19.11
				1RB Mid	1 Pos 24	19.50	0	18.84	19.50	0	18.83
				1RB High	1 Pos 49	19.50	0	18.77	19.50	0	18.95
				50% RB Low	25 Pos 0	19.50	0	18.96	19.50	0	19.02
				50% RB Mid	25 Pos 12	19.50	0	18.82	19.50	0	18.82
				50% RB High	25 Pos 24	19.50	0	18.82	19.50	0	18.83
				100% RB	50 Pos 0	19.50	0	18.84	19.50	0	18.82
		132622	1775	1RB Low	1 Pos 0	19.50	0	18.79	19.50	0	19.04
				1RB Mid	1 Pos 24	19.50	0	18.82	19.50	0	19.03
				1RB High	1 Pos 49	19.50	0	18.78	19.50	0	19.02
				50% RB Low	25 Pos 0	19.50	0	18.79	19.50	0	18.82
				50% RB Mid	25 Pos 12	19.50	0	18.81	19.50	0	18.83
				50% RB High	25 Pos 24	19.50	0	18.82	19.50	0	18.83
				100% RB	50 Pos 0	19.50	0	18.81	19.50	0	18.83

Band	BW	Channel #	Freq (MHz)	% RB Allocation	RB Position	QPSK			16 QAM		
						Factory Upper Tolerance (dBm)	MPR	Measured Output Power (dBm)	Factory Upper Tolerance (dBm)	MPR	Measured Output Power (dBm)
LTE66	5.0 MHz	131997	1712.5	1RB Low	1 Pos 0	19.50	0	19.15	19.50	0	19.21
				1RB Mid	1 Pos 12	19.50	0	19.26	19.50	0	19.36
				1RB High	1 Pos 24	19.50	0	19.24	19.50	0	19.28
				50% RB Low	12 Pos 0	19.50	0	19.10	19.50	0	19.09
				50% RB Mid	12 Pos 6	19.50	0	19.18	19.50	0	19.24
				50% RB High	12 Pos 11	19.50	0	19.21	19.50	0	19.19
				100% RB	25 Pos 0	19.50	0	19.19	19.50	0	19.22
		132422	1755	1RB Low	1 Pos 0	19.50	0	18.95	19.50	0	19.04
				1RB Mid	1 Pos 12	19.50	0	18.88	19.50	0	18.92
				1RB High	1 Pos 24	19.50	0	18.88	19.50	0	18.93
				50% RB Low	12 Pos 0	19.50	0	18.89	19.50	0	18.92
				50% RB Mid	12 Pos 6	19.50	0	18.82	19.50	0	18.89
				50% RB High	12 Pos 11	19.50	0	18.83	19.50	0	18.88
				100% RB	25 Pos 0	19.50	0	18.84	19.50	0	18.87
		132647	1777.5	1RB Low	1 Pos 0	19.50	0	18.85	19.50	0	19.09
				1RB Mid	1 Pos 12	19.50	0	18.82	19.50	0	18.93
				1RB High	1 Pos 24	19.50	0	18.78	19.50	0	18.82
				50% RB Low	12 Pos 0	19.50	0	18.78	19.50	0	18.82
				50% RB Mid	12 Pos 6	19.50	0	18.84	19.50	0	18.84
				50% RB High	12 Pos 11	19.50	0	18.77	19.50	0	18.76
				100% RB	25 Pos 0	19.50	0	18.83	19.50	0	18.87
	3.0 MHz	131987	1711.5	1RB Low	1 Pos 0	19.50	0	19.04	19.50	0	19.30
				1RB Mid	1 Pos 7	19.50	0	19.12	19.50	0	19.29
				1RB High	1 Pos 14	19.50	0	19.19	19.50	0	19.50
				50% RB Low	8 Pos 0	19.50	0	19.08	19.50	0	19.06
				50% RB Mid	8 Pos 4	19.50	0	19.07	19.50	0	19.19
				50% RB High	8 Pos 7	19.50	0	19.17	19.50	0	19.20
				100% RB	15 Pos 0	19.50	0	19.07	19.50	0	19.06
		132422	1755	1RB Low	1 Pos 0	19.50	0	18.85	19.50	0	19.00
				1RB Mid	1 Pos 7	19.50	0	18.82	19.50	0	19.00
				1RB High	1 Pos 14	19.50	0	18.80	19.50	0	19.12
				50% RB Low	8 Pos 0	19.50	0	18.82	19.50	0	18.85
				50% RB Mid	8 Pos 4	19.50	0	18.83	19.50	0	18.80
				50% RB High	8 Pos 7	19.50	0	18.83	19.50	0	18.85
				100% RB	15 Pos 0	19.50	0	18.83	19.50	0	18.82
		132657	1778.5	1RB Low	1 Pos 0	19.50	0	18.78	19.50	0	19.11
				1RB Mid	1 Pos 7	19.50	0	18.81	19.50	0	18.99
				1RB High	1 Pos 14	19.50	0	18.75	19.50	0	18.89
				50% RB Low	8 Pos 0	19.50	0	18.85	19.50	0	18.83
				50% RB Mid	8 Pos 4	19.50	0	18.80	19.50	0	18.69
				50% RB High	8 Pos 7	19.50	0	18.82	19.50	0	18.77
				100% RB	15 Pos 0	19.50	0	18.76	19.50	0	18.76
	1.4 MHz	131979	1710	1RB Low	1 Pos 0	19.50	0	19.14	19.50	0	19.02
				1RB Mid	1 Pos 2	19.50	0	19.10	19.50	0	19.08
				1RB High	1 Pos 5	19.50	0	19.13	19.50	0	19.34
				50% RB Low	3 Pos 0	19.50	0	19.04	19.50	0	19.08
				50% RB Mid	3 Pos 1	19.50	0	19.05	19.50	0	19.08
				50% RB High	3 Pos 2	19.50	0	19.02	19.50	0	19.06
				100% RB	6 Pos 0	19.50	0	19.01	19.50	0	18.97
		132422	1755	1RB Low	1 Pos 0	19.50	0	18.86	19.50	0	18.94
				1RB Mid	1 Pos 2	19.50	0	18.82	19.50	0	18.87
				1RB High	1 Pos 5	19.50	0	18.84	19.50	0	18.74
				50% RB Low	3 Pos 0	19.50	0	18.77	19.50	0	18.80
				50% RB Mid	3 Pos 1	19.50	0	18.78	19.50	0	18.85
				50% RB High	3 Pos 2	19.50	0	18.79	19.50	0	18.80
				100% RB	6 Pos 0	19.50	0	18.74	19.50	0	18.79
		132665	1779.3	1RB Low	1 Pos 0	19.50	0	18.82	19.50	0	18.85
				1RB Mid	1 Pos 2	19.50	0	18.82	19.50	0	18.68
				1RB High	1 Pos 5	19.50	0	18.84	19.50	0	18.84
				50% RB Low	3 Pos 0	19.50	0	18.76	19.50	0	18.81
				50% RB Mid	3 Pos 1	19.50	0	18.76	19.50	0	18.72
				50% RB High	3 Pos 2	19.50	0	18.77	19.50	0	18.76
				100% RB	6 Pos 0	19.50	0	18.73	19.50	0	18.76

B.2.3 LTE UL Carrier Aggregation

B.2.3.1 Intra-Band Contiguous

UL CA shall be tested based on the worst-case SAR configuration determined from non-CA SAR testing result.
The UL CA mode power measurements represent the total power across both carriers.

According to November 2017 TCB workshop, the following needs to be performed: The maximum measured output power, RB allocation, CC offsets, CC channel BWs, MPR, modulation and other relevant information for all UL CA SAR configurations are required in SAR reports to support the test setup and results, including explanations, call box configurations and certain testing restriction
1) When the maximum output for UL CA is ≤ standalone LTE mode
• The primary carrier is configured according to the highest standalone SAR configuration tested
• The secondary carrier and subsequent CCs are configured according to procedures used for power measurement and parameters similar to that used for the PCC
2) When the Reported SAR for UL CA configuration, is > 1.2 W/kg, UL CA SAR is also required for all the other test channels

B2.3.2 LTE CA 5B

Band	Modulation / BW	PCC			SCC			Factory Upper Tolerance (dBm)	Pwr Avg (dBm)
		Ch	Freq (MHz)	RB Allocation	Ch	Freq (MHz)	RB Allocation		
LTE 5	QPSK / 10MHz	20476	831.6	1RB High	20575	841.5	1RB Low	23.00	22.79

B.2.3.3 LTE CA 7C

Band	Modulation / BW	PCC			SCC			Factory Upper Tolerance (dBm)	Pwr Avg (dBm)
		Ch	Freq (MHz)	RB Allocation	Ch	Freq (MHz)	RB Allocation		
LTE 7	QPSK / 10MHz	21100	2535	1RB High	21199	2544.9	1RB Low	20.00	19.49

B.2.3.4 LTE CA 38C

SAR Measurement for LTE Band 38 TDD (Frequency range: 2570 – 2620MHz) is covered by LTE Band 41 TDD (Frequency range: 2496 – 2690MHz) due to overlapping frequency range, same maximum tune-up and same bandwidth.

B.2.3.5 LTE CA 41C

Band	Modulation / BW	PCC			SCC			Factory Upper Tolerance (dBm)	Pwr Avg (dBm)
		Ch	Freq (MHz)	RB Allocation	Ch	Freq (MHz)	RB Allocation		
LTE 41	QPSK / 20MHz	40521	2583.1	1RB High	40719	2602.9	1RB Low	20.00	19.61

B2.3.6 LTE CA 66B, 66C

Band	Modulation / BW	PCC			SCC			Factory Upper Tolerance (dBm)	Pwr Avg (dBm)
		Ch	Freq (MHz)	RB Allocation	Ch	Freq (MHz)	RB Allocation		
LTE 66B	QPSK / 10MHz	132373	1750.1	1RB High	132472	1760	1RB Low	19.50	19.45
LTE 66C	QPSK / 20MHz	132323	1745.1	1RB High	132521	1764.9	1RB Low	19.50	19.23

B.3 Tissue Parameters Measurement

Body TSL

Body TSL	Target TSL		Measured TSL		Deviation %		Date
Freq (MHz)	ε'(F/m)	σ(S/m)	ε'(F/m)	σ(S/m)	Deviation ε'	Deviation σ	
750	55.53	0.96	56.3	0.92	1.39	-4.17	2022-09-13
835	55.15	0.99	56.09	0.96	1.7	-3.03	2022-09-13
1750	53.43	1.49	54.06	1.44	1.18	-3.36	2022-09-19
	53.43	1.49	53.58	1.43	0.28	-4.03	2022-09-23
1900	53.3	1.52	55.16	1.55	3.49	1.97	2022-09-13
	53.3	1.52	53.85	1.55	1.03	1.97	2022-09-19
2300	52.9	1.81	54.66	1.9	3.33	4.97	2022-09-13
2600	52.51	2.16	54.05	2.22	2.93	2.78	2022-09-13
	52.51	2.16	52.84	2.18	0.63	0.93	2022-09-19
3700	51.05	3.55	51.31	3.41	0.51	-3.94	2022-09-13

See *Annex D* below for more details.

B.4 System Check Measurements

Body Measurements

Frequency (MHz)	Forwarded power (mW)	Average	Target SAR (W/Kg)	Measured SAR (W/Kg)	Deviation to target (%)	Deviation to target limit	Date
750	50	1g	8.46	8.29	-2.05	±10%	2022-09-14
		10g	5.59	5.52	-1.18		
835		1g	9.63	9.70	0.73		2022-09-14
		10g	6.31	6.44	2.06		
1750		1g	36.80	34.20	-7.07		2022-09-21
		10g	19.40	18.16	-6.39		
		1g	36.80	34.60	-5.98		2022-09-23
		10g	19.40	18.50	-4.64		
1900		1g	39.50	36.60	-7.34		2022-09-14
		10g	20.70	19.22	-7.15		
		1g	39.50	39.80	0.76		2022-09-21
		10g	20.70	20.80	0.48		
2300		1g	47.20	43.80	-7.20		2022-09-14
		10g	22.60	20.80	-7.96		
2600		1g	54.60	53.40	-2.20		2022-09-15
		10g	24.20	23.80	-1.65		
		1g	54.60	51.20	-6.23		2022-09-21
		10g	24.20	23.00	-4.96		
3700		1g	62.10	56.80	-8.53		2022-09-15
		10g	22.20	20.80	-6.31		

See *Annex C* for more details.

B.5 SAR Tablet Test Results

B.5.1 WCDMA II

Band	BW (MHz)	Rate	Channel Number	Freq (MHz)	Position	Scaling Factor (dB)	Measured SAR 1g (W/Kg)	Reported SAR 1g (W/Kg)	Plot #
Band II	5	RMC 12.2kbps	9262	1852.4	Top Edge	0.35	0.98	1.06	
			9400	1880	Back Face	0.48	0.15	0.17	
					Right Edge	0.48	0.05	0.05	
					Top Edge	0.48	1.01	1.13	
			9538	1907.6	Top Edge	0.26	1.06	1.13	**1**

B.5.2 WCDMA IV

Band	BW (MHz)	Rate	Channel Number	Freq (MHz)	Position	Scaling Factor (dB)	Measure SAR 1g (W/Kg)	Reported SAR 1g (W/Kg)	Plot #
Band IV	5	RMC 12.2kbps	1312	1712.4	Top Edge	0.16	0.89	0.92	**2**
			1413	1732.6	Back Face	0.29	0.32	0.35	
					Right Edge	0.29	0.08	0.09	
					Top Edge	0.29	0.86	0.91	
			1513	1752.6	Top Edge	0.43	0.70	0.77	

B.5.3 WCDMA V

Band	BW (MHz)	Rate	Channel Number	Freq (MHz)	Position	Scaling Factor (dB)	Measure SAR 1g (W/Kg)	Reported SAR 1g (W/Kg)	Plot #
Band V	5	RMC 12.2kbps	4183	836.6	Back Face	0.41	0.24	0.27	
					Right Edge	0.41	0.10	0.11	
					Top Edge	0.41	0.63	0.69	**3**

B.5.4 LTE

B.5.4.1 UL CA 5B

UL CA shall be tested based on the worst-case SAR configuration determined from non-CA SAR testing result. The channel BW, channel number, RB allocation, etc. would be selected to allow contiguous CA of PCC and SCC. Uplink output power for UL CA is the total power measured across the PCC and SCC.

Standalone testing in LTE Band5 is not required case SAR. Top Edge as it is covered by LTE Band 26. This latter is used to determine the antenna, position and channels that provide the worst- position with low channel is chosen as the configuration that gives the highest SAR, thus, the same is used for UL CA testing in Band5

Band	Modulation / BW	PCC			SCC			Position	Scaling Factor (dB)	Measured SAR 1g (W/Kg)	Reported SAR 1g (W/Kg)
		Ch	Freq (MHz)	RB Allocation	Ch	Freq (MHz)	RB Allocation				
LTE 5	QPSK / 10MHz	20476	831.6	1RB High	20575	841.5	1RB Low	Top Edge	0.21	0.63	0.66

PCC RB allocation settings for UL CA have been adjusted based on the worst-case power

B.5.4.2 LTE Band 7 FDD

Band	Mod.	BW (MHz)	Channel Number	Freq (MHz)	Position	% RB Allocation	Scaling Factor (dB)	Measured SAR 1g (W/Kg)	Reported SAR 1g (W/Kg)	Plot #
Band 7	QPSK	20	20850	2510	Top Edge	1RB Mid	0.59	1.19	1.36	**4**
						50RB Mid	0.53	1.17	1.32	
			21100	2535	Back Face	1RB Mid	0.72	0.26	0.30	
						50RB Mid	0.73	0.26	0.31	
					Right Edge	1RB Mid	0.72	0.05	0.06	
						50RB Mid	0.73	0.06	0.07	
					Top Edge	1RB Mid	0.72	1.07	1.26	
						50RB Mid	0.73	1.08	1.28	
						100RB Mid	0.70	1.12	1.32	
			21350	2560	Top Edge	1RB Mid	0.48	1.17	1.31	
						50RB Mid	0.64	1.14	1.32	

B.5.4.3 UL CA 7C

UL CA shall be tested based on the worst-case SAR configuration determined from non-CA SAR testing result. The channel BW, channel number, RB allocation, etc. would be selected to allow contiguous CA of PCC and SCC. Uplink output power for UL CA is the total power measured across the PCC and SCC.

From the above table on standalone testing on LTE Band 7, top edge position was chosen as the configuration that gives the highest SAR, thus, the same is used for UL CA testing

Band	Modulation / BW	PCC			SCC			Position	Scaling Factor (dB)	Measured SAR 1g (W/Kg)	Reported SAR 1g (W/Kg)
		Ch	Freq (MHz)	RB Allocation	Ch	Freq (MHz)	RB Allocation				
LTE 7	QPSK / 20MHz	21100	2535	1RB High	21199	2544.9	1RB Low	Top Edge	0.51	0.64	0.72

PCC RB allocation settings for UL CA have been adjusted based on the worst-case power

B.5.4.4 LTE Band 12 FDD

Band	Mod.	BW (MHz)	Channel Number	Freq (MHz)	Position	% RB Allocation	Scaling Factor (dB)	Measured SAR 1g (W/Kg)	Reported SAR 1g (W/Kg)	Plot #
Band 12	QPSK	10	23095	707.5	Back Face	1RB Mid	0.57	0.71	0.81	
						50RB Mid	0.59	0.56	0.64	
						100RB Mid	0.54	0.42	0.47	
					Right Edge	1RB Mid	0.57	0.08	0.09	
						50RB Mid	0.59	0.06	0.07	
					Top Edge	1RB Mid	0.57	0.77	0.88	5
						50RB Mid	0.59	0.69	0.79	
						100RB Mid	0.54	0.63	0.71	

B.5.4.5 LTE Band 13 FDD

Band	Mod.	BW (MHz)	Channel Number	Freq (MHz)	Position	% RB Allocation	Scaling Factor (dB)	Measured SAR 1g (W/Kg)	Reported SAR 1g (W/Kg)	Plot #
Band 13	QPSK	10	23230	782	Back Face	1RB Mid	0.54	0.32	0.36	
						50RB Mid	0.65	0.32	0.37	
					Right Edge	1RB Mid	0.54	0.19	0.22	
						50RB Mid	0.65	0.13	0.16	
					Top Edge	1RB Mid	0.54	0.35	0.40	
						50RB Mid	0.65	0.37	0.43	6

B.5.4.6 LTE Band 14 FDD

Band	Mod.	BW (MHz)	Channel Number	Freq (MHz)	Position	% RB Allocation	Scaling Factor (dB)	Measured SAR 1g (W/Kg)	Reported SAR 1g (W/Kg)	Plot #
Band 14	QPSK	10	23330	793	Back Face	1RB Mid	0.67	0.37	0.43	
						50RB Mid	0.66	0.30	0.35	
					Right Edge	1RB Mid	0.67	0.19	0.22	
						50RB Mid	0.66	0.15	0.18	
					Top Edge	1RB Mid	0.67	0.52	0.60	7
						50RB Mid	0.66	0.40	0.47	

B.5.4.7 LTE Band 25 FDD

Band	Mod.	BW (MHz)	Channel Number	Freq (MHz)	Position	% RB Allocation	Scaling Factor (dB)	Measured SAR 1g (W/Kg)	Reported SAR 1g (W/Kg)	Plot #
Band 25	QPSK	20	26140	1860	Top Edge	1RB Mid	0.66	0.88	1.02	
						50RB Mid	0.58	0.94	1.08	
			26365	1882.5	Back Face	1RB Mid	0.53	0.16	0.18	
						50RB Mid	0.57	0.29	0.33	
					Right Edge	1RB Mid	0.53	0.05	0.05	
						50RB Mid	0.57	0.05	0.06	
					Top Edge	1RB Mid	0.53	0.95	1.08	
						50RB Mid	0.57	0.96	1.09	
						100RB Mid	0.68	0.98	1.15	
			26590	1905	Top Edge	1RB Mid	0.45	0.96	1.07	
						50RB Mid	0.46	1.01	1.12	8

B.5.4.8 LTE Band 26 FDD

Band	Mod.	BW (MHz)	Channel Number	Freq (MHz)	Position	% RB Allocation	Scaling Factor (dB)	Measured SAR 1g (W/Kg)	Reported SAR 1g (W/Kg)	Plot #
Band 26	QPSK	15	26765	821.5	Top Edge	1RB Mid	0.77	0.68	0.81	
						50RB Mid	0.78	0.53	0.64	
			26865	831.5	Back Face	1RB Mid	0.62	0.31	0.36	
						50RB Mid	0.65	0.25	0.29	
					Right Edge	1RB Mid	0.62	0.11	0.13	
						50RB Mid	0.65	0.09	0.10	
					Top Edge	1RB Mid	0.62	0.70	0.81	**9**
						50RB Mid	0.65	0.55	0.64	
						100RB Mid	0.57	0.57	0.65	
			26965	841.5	Top Edge	1RB Mid	0.79	0.66	0.79	
						50RB Mid	0.75	0.52	0.62	

B.5.4.9 LTE Band 30 FDD

Band	Mod.	BW (MHz)	Channel Number	Freq (MHz)	Position	% RB Allocation	Scaling Factor (dB)	Measured SAR 1g (W/Kg)	Reported SAR 1g (W/Kg)	Plot #
Band 30	QPSK	10	27710	2310	Back Face	1RB Mid	0.54	0.26	0.29	
						50RB Mid	0.57	0.26	0.29	
					Right Edge	1RB Mid	0.54	0.10	0.12	
						50RB Mid	0.57	0.10	0.12	
					Top Edge	1RB Mid	0.54	0.81	0.92	
						50RB Mid	0.57	0.81	0.92	
						100RB Mid	0.58	0.83	0.95	**10**

B.5.4.10 LTE Band 41 TDD

Band	Mod.	BW (MHz)	Channel Number	Freq (MHz)	Position	% RB Allocation	Scaling Factor (dB)	Measured SAR 1g (W/Kg)	Reported SAR 1g (W/Kg)	Plot #
Band 41	QPSK	20	40620	2593	Back Face	1RB Mid	0.59	0.17	0.19	
						50RB Mid	0.66	0.17	0.19	
					Right Edge	1RB Mid	0.59	0.04	0.05	
						50RB Mid	0.66	0.04	0.05	
					Top Edge	1RB Mid	0.59	0.62	0.71	11
						50RB Mid	0.66	0.61	0.71	

B.5.4.11 UL CA 41C

UL CA shall be tested based on the worst-case SAR configuration determined from non-CA SAR testing result.
The channel BW, channel number, RB allocation, etc. would be selected to allow contiguous CA of PCC and SCC.
Uplink output power for UL CA is the total power measured across the PCC and SCC.

From the above table on standalone testing on LTE Band41, top edge position was chosen as the configurations that give the highest SAR, thus, the same is used for UL CA testing

Band	Modulation / BW	PCC			SCC			Position	Scaling Factor (dB)	Measured SAR 1g (W/Kg)	Reported SAR 1g (W/Kg)
		Ch	Freq (MHz)	RB Allocation	Ch	Freq (MHz)	RB Allocation				
LTE 41	QPSK / 20MHz	40521	2583.1	1RB High	40719	2602.9	1RB Low	Top Edge	0.39	0.37	0.40

PCC RB allocation settings for UL CA have been adjusted based on the worst-case power

B.5.4.12 LTE Band 48 TDD

Band	Mod.	BW (MHz)	Channel Number	Freq (MHz)	Position	% RB Allocation	Scaling Factor (dB)	Measured SAR 1g (W/Kg)	Reported SAR 1g (W/Kg)	Plot #
Band 48	QPSK	20	55990	3625	Back Face	1RB Mid	0.42	0.05	0.06	
						50RB Mid	0.52	0.06	0.07	
					Right Edge	1RB Mid	0.42	0.14	0.16	
						50RB Mid	0.52	0.10	0.11	
					Top Edge	1RB Mid	0.42	0.35	0.39	12
						50RB Mid	0.52	0.27	0.31	

B.5.4.13 LTE Band 66 FDD

Band	Mod.	BW (MHz)	Channel Number	Freq (MHz)	Position	% RB Allocation	Scaling Factor (dB)	Measured SAR 1g (W/Kg)	Reported SAR 1g (W/Kg)	Plot #
Band 66	QPSK	20	132072	1720	Top Edge	1RB Mid	0.37	0.88	0.96	
						50RB Mid	0.34	0.80	0.86	
			132322	1745	Back Face	1RB Mid	0.63	0.23	0.26	
						50RB Mid	0.68	0.23	0.26	
					Right Edge	1RB Mid	0.63	0.07	0.08	
						50RB Mid	0.68	0.02	0.02	
					Top Edge	1RB Mid	0.63	0.82	0.95	
						50RB Mid	0.68	0.80	0.93	
						100RB Mid	0.68	0.83	0.97	14
			132572	1770	Top Edge	1RB Mid	0.67	0.60	0.70	
						50RB Mid	0.68	0.62	0.73	

B.5.4.14 UL CA 66B, 66C

UL CA shall be tested based on the worst-case SAR configuration determined from non-CA SAR testing result. The channel BW, channel number, RB allocation, etc. would be selected to allow contiguous CA of PCC and SCC. Uplink output power for UL CA is the total power measured across the PCC and SCC.

From the above table on standalone testing on LTE Band 66, top edge position in the low channel is chosen as the configurations that gives the highest SAR, thus, the same is used for UL CA testing for the 66C mode. Since the 10MHz was not tested in standalone, due to KDB 941225 reduction list, the initial configuration for the 66B mode was taken from the worst-case scenario of the 20MHz

Band	Modulation / BW	PCC			SCC			Position	Scaling Factor (dB)	Measured SAR 1g (W/Kg)	Reported SAR 1g (W/Kg)
		Ch	Freq (MHz)	RB Allocation	Ch	Freq (MHz)	RB Allocation				
LTE 66 66B	QPSK / 10MHz	132373	1750.1	1RB High	132472	1760	1RB Low	Top Edge	0.05	0.70	0.71
LTE 66 66C	QPSK / 20MHz	132323	1745.1	1RB High	132521	1764.9	1RB Low		0.27	0.67	0.71

PCC RB allocation settings for UL CA have been adjusted based on the worst-case power

B.5.5 SAR Measurement Variability

According to FCC OET KDB 865664, SAR Measurement variability is assessed when the maximum initial measured SAR is ≥0.8 W/kg for a certain band/mode. If the measured SAR value of the initial repeated measurement is <1.45 W/kg with <20% variation, only one repeated measurement is required to confirm that the results are not expected to have substantial variations.
A second repeated measurement is required only if the measured results for the initial repeated measurement are within 10% of the SAR limit or vary by more than 20%.
A third repeated measurement is required only if the original, first or second repeated measurement ≥1.5W/Kg and the ratio of largest to smallest SAR for the original, first and second repeated measurement is > 1.2.

Band / Mode	Position	Ch #	Freq. (MHz)	Measured SAR 1g (W/kg)	1st Repeated SAR 1g (W/kg)	2nd Repeated SAR 1g (W/kg)	Highest Ratio
WCDMA IV / QPSK – 5MHz	Top Edge	1413	1712.4	0.89	0.89		1.00
WCDMA II / QPSK – 5MHz	Top Edge	9538	1907.6	1.06	1.04		1.02
LTE 30 / QPSK – 10MHz	Top Edge	27710	2310	0.83	0.81		1.02
LTE 7 / QPSK – 20MHz	Top Edge	20850	2510	1.19	1.19		1.00

B.5.6 Simultaneous Transmission SAR Evaluation

According to FCC OET KDB 447498, when the sum of 1g SAR for all simultaneously transmitting antennas in an operating mode and exposure condition combination is within the SAR limit, SAR test exclusion applies to that simultaneous transmission configuration.

As commented on section 6, this report only evaluates SAR for cellular transmission on the module, nevertheless in order to consider all possible simultaneous transmissions on the device for compliance, WLAN SAR values reported on document [1] [2] are considered.

[1] *FA281920-03_R01*

[2] *CA281920-03_R01*

All the values stated in the table below are the worst case found for standalone measurement with disregard of the transmission mode or channel where the worst case was found

Antenna	Position	Highest Reported SAR (1g) (W/kg)			
		WWAN	WLAN 2.4GHz[1]	WLAN 5/6GHz[1]	Bluetooth[1]
WWAN (Ant5 TX/RX)	Back Face	0.81			
	Left Edge	0.40*			
	Right Edge	0.22			
	Top Edge	1.36			
Main WLAN1	Back Face		0.18	0.26	
	Left Edge		0.07	0.06	
	Right Edge		0.40*	0.40*	
	Top Edge		0.62	0.54	
Aux WLAN2	Back Face		0.06	0.39	0.00
	Left Edge		0.02	0.08	0.00
	Right Edge		0.40*	0.40*	0.40*
	Top Edge		0.21	1.00	0.01

*According to FCC OET KDB 447498, when standalone test exclusion is applied to an antenna that transmits simultaneously with other antennas, the standalone SAR must be estimated to 0.4 W/Kg for 1-g SAR when the test separation is > 50mm in order to determine simultaneous transmission test exclusion.

Position	Simultaneous Tx Antenna Combination				Σ SAR 1g (W/Kg)	Limit (W/kg)
	#	WWAN (Ant5 TX/RX)	Main WLAN1	Aux WLAN2		
Back Face	1	Cellular	WLAN 5/6GHz	WLAN 5/6GHz	1.46	1.6
	2	Cellular	WLAN 5/6GHz	WLAN 5/6GHz + BT	1.46	
	3	Cellular	WLAN 5/6GHz	BT	1.07	
	4	Cellular	WLAN 2.4GHz	WLAN 2.4GHz	1.05	
	5	Cellular	WLAN 2.4GHz	BT	0.99	
Left Edge	1	Cellular	WLAN 5/6GHz	WLAN 5/6GHz	0.54	
	2	Cellular	WLAN 5/6GHz	WLAN 5/6GHz + BT	0.54	
	3	Cellular	WLAN 5/6GHz	BT	0.46	
	4	Cellular	WLAN 2.4GHz	WLAN 2.4GHz	0.50	
	5	Cellular	WLAN 2.4GHz	BT	0.42	
Right Edge	1	Cellular	WLAN 5/6GHz	WLAN 5/6GHz	1.02	
	2	Cellular	WLAN 5/6GHz	WLAN 5/6GHz + BT	1.42	
	3	Cellular	WLAN 5/6GHz	BT	1.02	
	4	Cellular	WLAN 2.4GHz	WLAN 2.4GHz	1.02	
	5	Cellular	WLAN 2.4GHz	BT	1.02	
Top Edge	1	Cellular	WLAN 5/6GHz	WLAN 5/6GHz	**2.90**	
	2	Cellular	WLAN 5/6GHz	WLAN 5/6GHz + BT	**2.91**	
	3	Cellular	WLAN 5/6GHz	BT	**1.91**	
	4	Cellular	WLAN 2.4GHz	WLAN 2.4GHz	**2.19**	
	5	Cellular	WLAN 2.4GHz	BT	**1.99**	

In case the sum of SAR is larger than the limit, SAR test exclusion is determined by the SAR to peak location separation ratio. According to the last table possible simultaneous transmission combinations are identified for each position from 1 to 5, each combination will be analyzed by antenna pairs. Antenna pairs considered in one configuration won't be performed again in case they are repeated on the next simultaneous configuration:

Position	Ant. Pair	Antenna	Report SAR 1g (W/kg)	Σ SAR 1g (W/Kg)	Peak Location (mm) (x,y,z)	SAR to peak location separation ratio	Limit
Back Face	1a	WWAN (Ant5 TX/RX)	0.81	1.07			0.04
		Main WLAN1 5/6GHz	0.26				
	1b	WWAN (Ant5 TX/RX)	0.81	1.20			
		Aux WLAN2 5/6GHz	0.39				
	1c	Main WLAN1 5/6GHz	0.26	0.65			
		Aux WLAN2 5/6GHz	0.39				
	2a	WWAN (Ant5 TX/RX)	0.81	0.81			
		Aux WLAN2 BT	0.00				
	4a	WWAN (Ant5 TX/RX)	0.81	0.99			
		Main WLAN1 2.4GHz	0.18				
	4b	WWAN (Ant5 TX/RX)	0.81	1.20			
		AuxWLAN2 2.4GHz	0.39				
	4c	Main WLAN1 2.4GHz	0.18	0.24			
		AuxWLAN2 2.4GHz	0.06				

Position	Ant. Pair	Antenna	Report SAR 1g (W/kg)	Σ SAR 1g (W/Kg)	Peak Location (mm) (x,y,z)	SAR to peak location separation ratio	Limit
Left Edge	1a	WWAN (Ant5 TX/RX)	0.40	0.46			0.04
		Main WLAN1 5/6GHz	0.06				
	1b	WWAN (Ant5 TX/RX)	0.40	0.47			
		Aux WLAN2 5/6GHz	0.07				
	1c	Main WLAN1 5/6GHz	0.06	0.14			
		Aux WLAN2 5/6GHz	0.08				
	2a	WWAN (Ant5 TX/RX)	0.40	0.40			
		Aux WLAN2 BT	0.00				
	4a	WWAN (Ant5 TX/RX)	0.40	0.47			
		Main WLAN1 2.4GHz	0.07				
	4b	WWAN (Ant5 TX/RX)	0.40	0.48			
		AuxWLAN2 2.4GHz	0.08				
	4c	Main WLAN1 2.4GHz	0.07	0.09			
		AuxWLAN2 2.4GHz	0.02				

Position	Ant. Pair	Antenna	Report SAR 1g (W/kg)	Σ SAR 1g (W/Kg)	Peak Location (mm) (x,y,z)	SAR to peak location separation ratio	Limit
Right Edge	1a	WWAN (Ant5 TX/RX)	0.22	0.62			0.04
		Main WLAN1 5/6GHz	0.40				
	1b	WWAN (Ant5 TX/RX)	0.22	0.62			
		Aux WLAN2 5/6GHz	0.40				
	1c	Main WLAN1 5/6GHz	0.40	0.80			
		Aux WLAN2 5/6GHz	0.40				
	2a	WWAN (Ant5 TX/RX)	0.22	0.62			
		Aux WLAN2 BT	0.40				
	4a	WWAN (Ant5 TX/RX)	0.22	0.62			
		Main WLAN1 2.4GHz	0.40				
	4b	WWAN (Ant5 TX/RX)	0.22	0.62			
		AuxWLAN2 2.4GHz	0.40				
	4c	Main WLAN1 2.4GHz	0.40	0.80			
		AuxWLAN2 2.4GHz	0.40				

Position	Ant. Pair	Antenna	Report SAR 1g (W/kg)	Σ SAR 1g (W/Kg)	Peak Location (mm) (x,y,z)	SAR to peak location separation ratio	Limit
Top Edge	1a	WWAN (Ant5 TX/RX)	1.36	1.90	(0.5,59,-177.0)	0.02	0.04
		Main WLAN1 5/6GHz	0.54		(8.5,-123.1,-177.1)		
	1b	WWAN (Ant5 TX/RX)	1.36	2.36	(0.5,59,-177.0)	0.03	
		Aux WLAN2 5/6GHz	1.00		(7,-48.5,-177.1)		
	1c	Main WLAN1 5/6GHz	0.54	1.54			
		Aux WLAN2 5/6GHz	1.00				
	2a	WWAN (Ant5 TX/RX)	1.36	1.37			
		Aux WLAN2 BT	0.01				
	4a	WWAN (Ant5 TX/RX)	1.36	1.98	(0.5,59,-177.0)	0.02	
		Main WLAN1 2.4GHz	0.62		(6.5,-110.5,-177.1)		
	4b	WWAN (Ant5 TX/RX)	1.36	1.57			
		AuxWLAN2 2.4GHz	0.21				
	4c	Main WLAN1 2.4GHz	0.62	0.83			
		AuxWLAN2 2.4GHz	0.21				

Considering the results described above and according to the simultaneous transmission evaluation exclusions described in FCC OET KDB 447498, no enlarged zoom scan measurements are required

Annex C. Test System Plots

1. WCDMA II, RMC 12.2kbps, 5MHz, CH9538, Top Edge 63
2. WCDMA IV, RMC 12.2kbps, 5MHz, CH1312, Top Edge 64
3. WCDMA V, RMC 12.2kbps, 5MHz, CH4183, Top Edge 65
4. LTE Band 7, QPSK - 20MHz, CH20850, Top Edge 66
5. LTE Band 12, QPSK - 10MHz, CH23095, Top Edge 67
6. LTE Band 13, QPSK - 10MHz, CH23230, Top Edge 68
7. LTE Band 14, QPSK - 10MHz, CH23330, Top Edge 69
8. LTE Band 25, QPSK - 20MHz, CH26590, Top Edge 70
9. LTE Band 26, QPSK - 15MHz, CH26865, Top Edge 71
10. LTE Band 30 - 10MHz, CH27710, Top Edge 72
11. LTE Band 41, QPSK - 20MHz, CH40620, Top Edge 73
12. LTE Band 48 - 20MHz, CH55990, Top Edge 74
13. LTE Band 66 - 20MHz, CH132322, Top Edge 75
14. System Check Body Liquid 750MHz 76
15. System Check Body Liquid 835MHz 77
16. System Check Body Liquid 1750MHz – 21-09-2022 78
17. System Check Body Liquid 1750MHz – 23-09-2022 79
18. System Check Body Liquid 1900MHz – 2022-09-14 80
19. System Check Body Liquid 1900MHz – 2022-09-21 81
20. System Check Body Liquid 2300MHz 82
21. System Check Body Liquid 2600MHz – 2022-09-15 83
22. System Check Body Liquid 2600MHz – 2022-09-21 84
23. System Check Body Liquid 3700MHz 85

1. WCDMA II, RMC 12.2kbps, 5MHz, CH9538, Top Edge

Device under Test Properties

Model, Manufacturer	Dimensions [mm]	S/N	DUT Type
HSN-I57C	205.0 x 295.0 x 20.0	C902NL009Y	Convertible PC

Exposure Conditions

Phantom Section, TSL	Position, Test Distance [mm]	Band	Group, UID	Frequency [MHz], Channel Number	Conversion Factor	TSL Conductivity [S/m]	TSL Permittivity
Flat, MSL	EDGE TOP, 0.00	Band2, UTRA/FDD	WCDMA, 10011-CAB	1907.6, 9538	8.06	1.55	53.8

Hardware Setup

Phantom	TSL, Measured Date	Probe, Calibration Date	DAE, Calibration Date
ELI V8.0 (20deg probe tilt)	MBBL-600-6000, 2022-Sep-19	EX3DV4 - SN3978, 2022-05-17	DAE4ip Sn1703, 2022-04-28

Scan Setup

	Area Scan	Zoom Scan
Grid Extents [mm]	60.0 x 330.0	30.0 x 30.0 x 30.0
Grid Steps [mm]	15.0 x 15.0	6.0 x 6.0 x 1.5
Sensor Surface [mm]	3.0	1.4
Graded Grid	Yes	Yes
Grading Ratio	1.5	1.5
MAIA	Confirmed by MAIA	Confirmed by MAIA
Surface Detection	VMS + 6p	VMS + 6p
Scan Method	Measured	Measured

Measurement Results

	Area Scan	Zoom Scan
Date	2022-09-21, 14:49	2022-09-21, 15:07
psSAR1g [W/Kg]	0.904	1.06
psSAR10g [W/Kg]	0.495	0.571
Power Drift [dB]	0.02	0.03
Power Scaling	Disabled	Disabled
Scaling Factor [dB]		
TSL Correction	Positive Only	Positive Only
M2/M1 [%]		81.0
Dist 3dB Peak [mm]		9.6

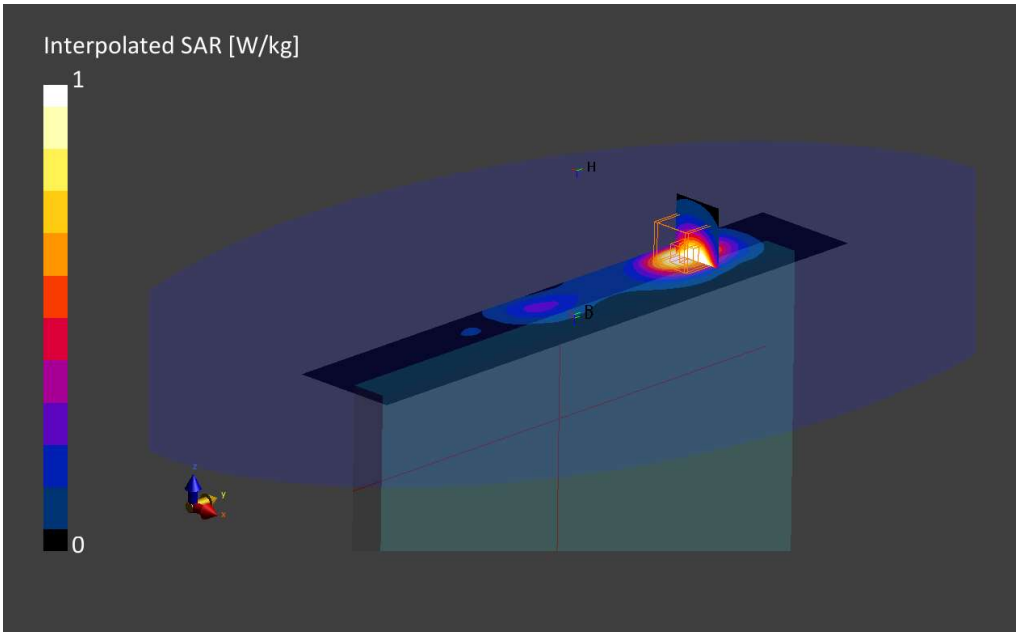

2. WCDMA IV, RMC 12.2kbps, 5MHz, CH1312, Top Edge

Device under Test Properties

Model, Manufacturer	Dimensions [mm]	S/N	DUT Type
HSN-I57C	205.0 x 295.0 x 20.0	C902NL009Y	Convertible PC

Exposure Conditions

Phantom Section, TSL	Position, Test Distance [mm]	Band	Group, UID	Frequency [MHz], Channel Number	Conversion Factor	TSL Conductivity [S/m]	TSL Permittivity
Flat, MSL	EDGE TOP, 0.00	Band4, UTRA/FDD	WCDMA, 10011-CAB	1712.4, 1312	8.42	1.41	53.6

Hardware Setup

Phantom	TSL, Measured Date	Probe, Calibration Date	DAE, Calibration Date
ELI V8.0 (20deg probe tilt)	MBBL-600-6000, 2022-Sep-23	EX3DV4 - SN3978, 2022-05-17	DAE4ip Sn1703, 2022-04-28

Scan Setup

	Area Scan	Zoom Scan
Grid Extents [mm]	60.0 x 330.0	30.0 x 30.0 x 30.0
Grid Steps [mm]	15.0 x 15.0	6.0 x 6.0 x 1.5
Sensor Surface [mm]	3.0	1.4
Graded Grid	Yes	Yes
Grading Ratio	1.5	1.5
MAIA	Confirmed by MAIA	Confirmed by MAIA
Surface Detection	VMS + 6p	VMS + 6p
Scan Method	Measured	Measured

Measurement Results

	Area Scan	Zoom Scan
Date	2022-09-23, 21:12	2022-09-23, 21:31
psSAR1g [W/Kg]	0.857	0.886
psSAR10g [W/Kg]	0.459	0.500
Power Drift [dB]	0.02	-0.03
Power Scaling	Disabled	Disabled
Scaling Factor [dB]		
TSL Correction	Positive Only	Positive Only
M2/M1 [%]		80.7
Dist 3dB Peak [mm]		10.8

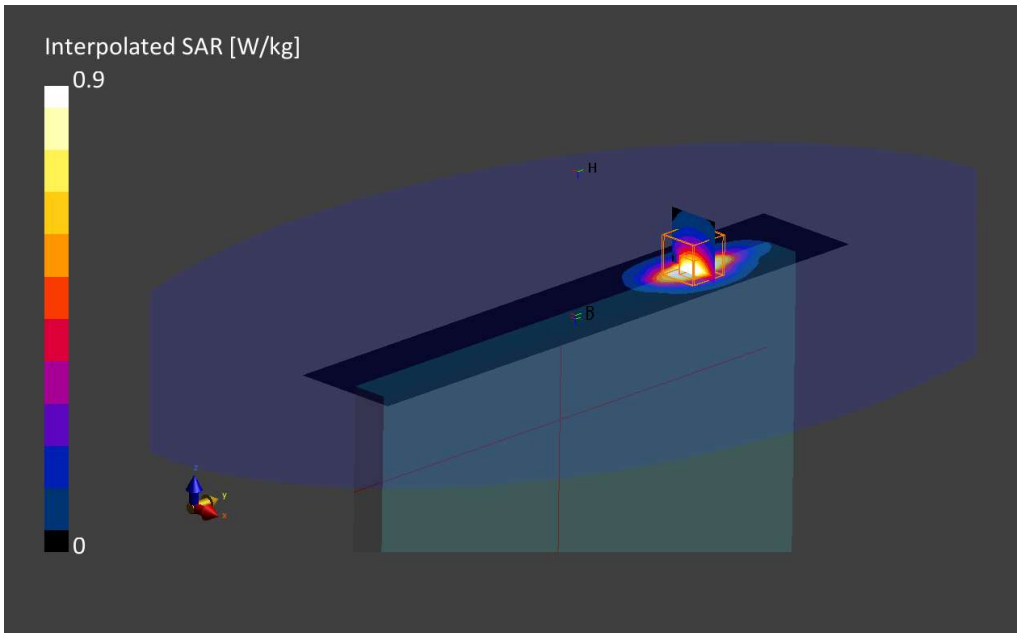

3. WCDMA V, RMC 12.2kbps, 5MHz, CH4183, Top Edge

Device under Test Properties

Model, Manufacturer	Dimensions [mm]	S/N	DUT Type
HSN-I57C	205.0 x 295.0 x 20.0	C902NL009Y	Convertible PC

Exposure Conditions

Phantom Section, TSL	Position, Test Distance [mm]	Band	Group, UID	Frequency [MHz], Channel Number	Conversion Factor	TSL Conductivity [S/m]	TSL Permittivity
Flat, MSL	EDGE TOP, 0.00	Band5, UTRA/FDD	WCDMA, 10011-CAB	836.6, 4183	9.81	0.94	56.2

Hardware Setup

Phantom	TSL, Measured Date	Probe, Calibration Date	DAE, Calibration Date
ELI V8.0 (20deg probe tilt)	MBBL-600-6000, 2022-Sep-13	EX3DV4 - SN3978, 2022-05-17	DAE4ip Sn1703, 2022-04-28

Scan Setup

	Area Scan	Zoom Scan
Grid Extents [mm]	60.0 x 330.0	30.0 x 30.0 x 30.0
Grid Steps [mm]	15.0 x 15.0	6.0 x 6.0 x 1.5
Sensor Surface [mm]	3.0	1.4
Graded Grid	Yes	Yes
Grading Ratio	1.5	1.5
MAIA	Confirmed by MAIA	Confirmed by MAIA
Surface Detection	VMS + 6p	VMS + 6p
Scan Method	Measured	Measured

Measurement Results

	Area Scan	Zoom Scan
Date	2022-09-14, 10:52	2022-09-14, 10:58
psSAR1g [W/Kg]	0.580	0.628
psSAR10g [W/Kg]	0.363	0.389
Power Drift [dB]	0.01	0.03
Power Scaling	Disabled	Disabled
Scaling Factor [dB]		
TSL Correction	Positive Only	Positive Only
M2/M1 [%]		82.1
Dist 3dB Peak [mm]		11.4

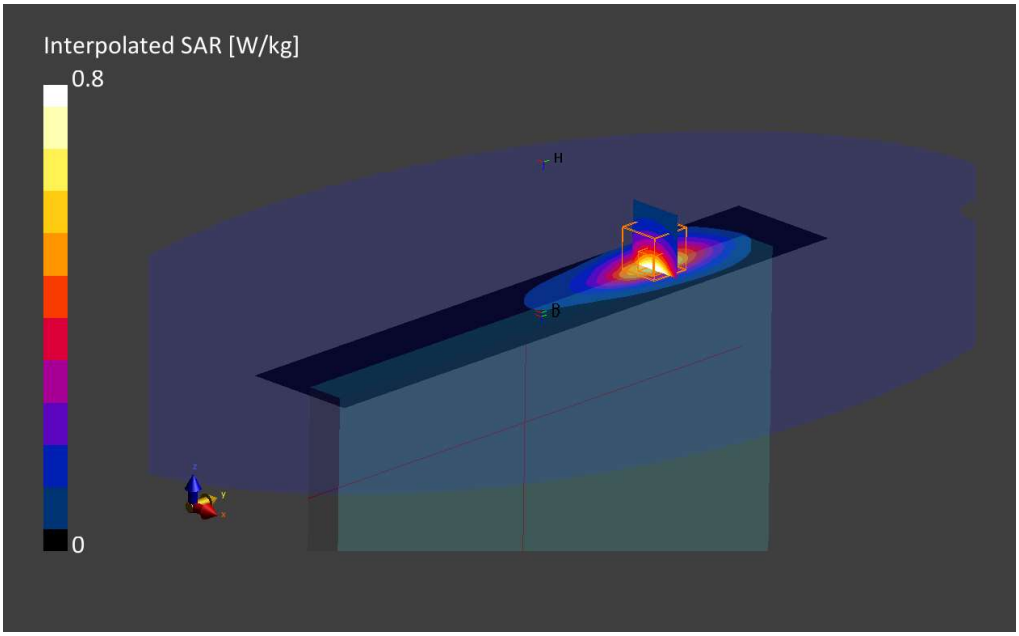

4. LTE Band 7, QPSK - 20MHz, CH20850, Top Edge

Device under Test Properties

Model, Manufacturer	Dimensions [mm]	S/N	DUT Type
HSN-I57C	205.0 x 295.0 x 20.0	C902NL009Y	Convertible PC

Exposure Conditions

Phantom Section, TSL	Position, Test Distance [mm]	Band	Group, UID	Frequency [MHz], Channel Number	Conversion Factor	TSL Conductivity [S/m]	TSL Permittivity
Flat, MSL	EDGE TOP, 0.00	Band 7, E-UTRA/FDD	LTE-FDD, 10169-CAE	2510.0, 20850	7.23	2.08	53.0

Hardware Setup

Phantom	TSL, Measured Date	Probe, Calibration Date	DAE, Calibration Date
ELI V8.0 (20deg probe tilt)	MBBL-600-6000, 2022-Sep-19	EX3DV4 - SN3978, 2022-05-17	DAE4ip Sn1703, 2022-04-28

Scan Setup

	Area Scan	Zoom Scan
Grid Extents [mm]	60.0 x 340.0	30.0 x 30.0 x 30.0
Grid Steps [mm]	10.0 x 10.0	5.0 x 5.0 x 1.5
Sensor Surface [mm]	3.0	1.4
Graded Grid	Yes	Yes
Grading Ratio	1.5	1.5
MAIA	Confirmed by MAIA	Confirmed by MAIA
Surface Detection	VMS + 6p	VMS + 6p
Scan Method	Measured	Measured

Measurement Results

	Area Scan	Zoom Scan
Date	2022-09-21, 17:50	2022-09-21, 18:05
psSAR1g [W/Kg]	1.130	1.190
psSAR10g [W/Kg]	0.474	0.521
Power Drift [dB]	0.02	0.06
Power Scaling	Disabled	Disabled
Scaling Factor [dB]		
TSL Correction	Positive Only	Positive Only
M2/M1 [%]		78.2
Dist 3dB Peak [mm]		3.0

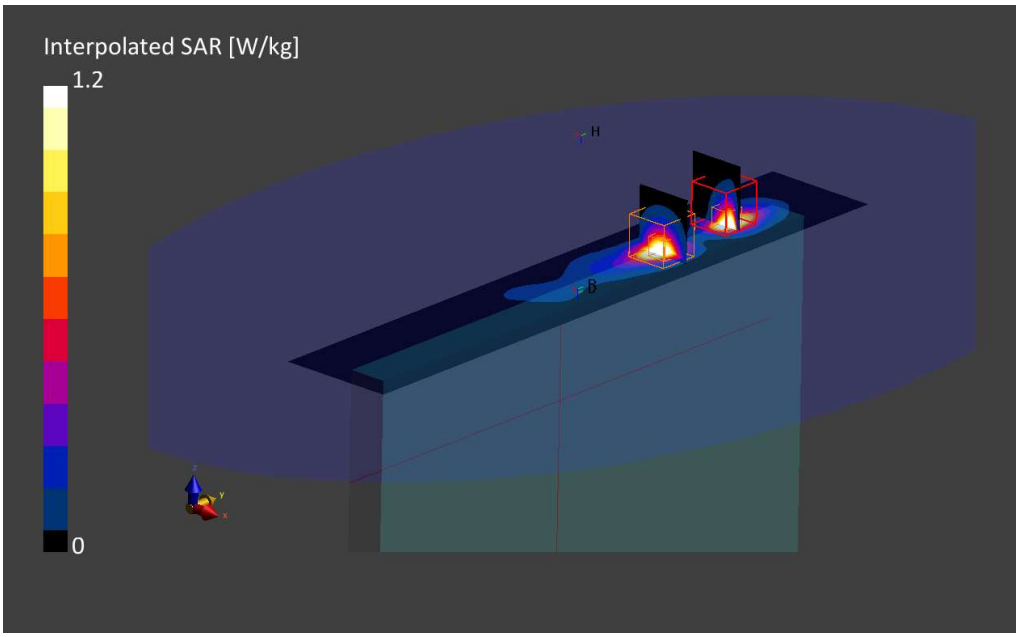

5. LTE Band 12, QPSK - 10MHz, CH23095, Top Edge

Device under Test Properties

Model, Manufacturer	Dimensions [mm]	S/N	DUT Type
HSN-I57C	205.0 x 295.0 x 20.0	C902NL009Y	Convertible PC

Exposure Conditions

Phantom Section, TSL	Position, Test Distance [mm]	Band	Group, UID	Frequency [MHz], Channel Number	Conversion Factor	TSL Conductivity [S/m]	TSL Permittivity
Flat, MSL	EDGE TOP, 0.00	Band 12, E-UTRA/FDD	LTE-FDD, 10175-CAG	707.5, 23095	10.08	0.90	56.4

Hardware Setup

Phantom	TSL, Measured Date	Probe, Calibration Date	DAE, Calibration Date
ELI V8.0 (20deg probe tilt)	MBBL-600-6000, 2022-Sep-13	EX3DV4 - SN3978, 2022-05-17	DAE4ip Sn1703, 2022-04-28

Scan Setup

	Area Scan	Zoom Scan
Grid Extents [mm]	60.0 x 330.0	30.0 x 30.0 x 30.0
Grid Steps [mm]	15.0 x 15.0	6.0 x 6.0 x 1.5
Sensor Surface [mm]	3.0	1.4
Graded Grid	Yes	Yes
Grading Ratio	1.5	1.5
MAIA	Confirmed by MAIA	Confirmed by MAIA
Surface Detection	VMS + 6p	VMS + 6p
Scan Method	Measured	Measured

Measurement Results

	Area Scan	Zoom Scan
Date	2022-09-14, 18:02	2022-09-14, 18:08
psSAR1g [W/Kg]	0.736	0.771
psSAR10g [W/Kg]	0.466	0.474
Power Drift [dB]	0.01	-0.01
Power Scaling Factor [dB]	Disabled	Disabled
TSL Correction	Positive Only	Positive Only
M2/M1 [%]		82.6
Dist 3dB Peak [mm]		9.6

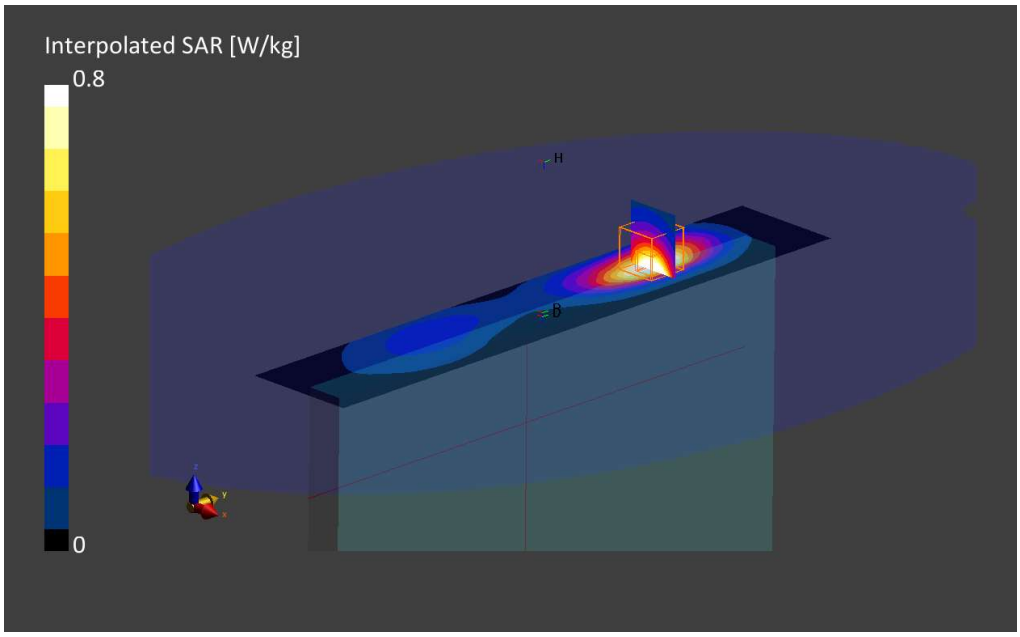

6. LTE Band 13, QPSK - 10MHz, CH23230, Top Edge

Device under Test Properties

Model, Manufacturer	Dimensions [mm]	S/N	DUT Type
HSN-I57C	205.0 x 295.0 x 20.0	C902NL009Y	Convertible PC

Exposure Conditions

Phantom Section, TSL	Position, Test Distance [mm]	Band	Group, UID	Frequency [MHz], Channel Number	Conversion Factor	TSL Conductivity [S/m]	TSL Permittivity
Flat, MSL	EDGE TOP, 0.00	Band 13, E-UTRA/FDD	LTE-FDD, 10154-CAG	782.0, 23230	10.08	0.92	56.3

Hardware Setup

Phantom	TSL, Measured Date	Probe, Calibration Date	DAE, Calibration Date
ELI V8.0 (20deg probe tilt)	MBBL-600-6000, 2022-Sep-13	EX3DV4 - SN3978, 2022-05-17	DAE4ip Sn1703, 2022-04-28

Scan Setup

	Area Scan	Zoom Scan
Grid Extents [mm]	60.0 x 330.0	30.0 x 30.0 x 30.0
Grid Steps [mm]	15.0 x 15.0	6.0 x 6.0 x 1.5
Sensor Surface [mm]	3.0	1.4
Graded Grid	Yes	Yes
Grading Ratio	1.5	1.5
MAIA	Confirmed by MAIA	Confirmed by MAIA
Surface Detection	VMS + 6p	VMS + 6p
Scan Method	Measured	Measured

Measurement Results

	Area Scan	Zoom Scan
Date	2022-09-14, 15:03	2022-09-14, 15:09
psSAR1g [W/Kg]	0.352	0.369
psSAR10g [W/Kg]	0.224	0.192
Power Drift [dB]	0.09	-0.05
Power Scaling Factor [dB]	Disabled	Disabled
TSL Correction	Positive Only	Positive Only
M2/M1 [%]		80.9
Dist 3dB Peak [mm]		4.8

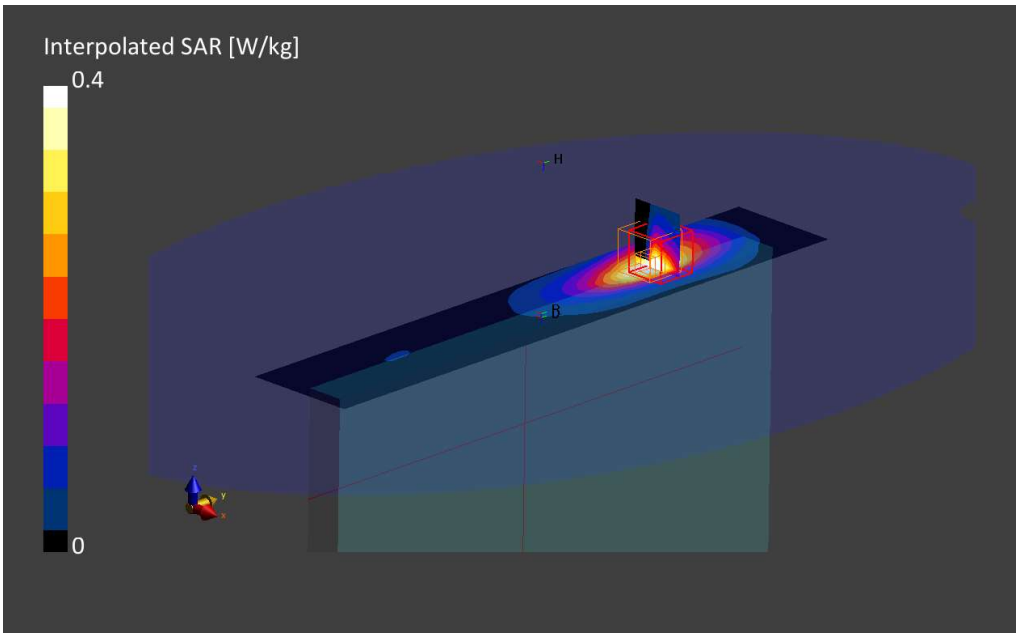

7. LTE Band 14, QPSK - 10MHz, CH23330, Top Edge

Device under Test Properties

Model, Manufacturer	Dimensions [mm]	S/N	DUT Type
HSN-I57C	205.0 x 295.0 x 20.0	C902NL009Y	Convertible PC

Exposure Conditions

Phantom Section, TSL	Position, Test Distance [mm]	Band	Group, UID	Frequency [MHz], Channel Number	Conversion Factor	TSL Conductivity [S/m]	TSL Permittivity
Flat, MSL	EDGE TOP, 0.00	Band 14, E-UTRA/FDD	LTE-FDD, 10175-CAG	793.0, 23330	10.08	0.94	56.2

Hardware Setup

Phantom	TSL, Measured Date	Probe, Calibration Date	DAE, Calibration Date
ELI V8.0 (20deg probe tilt)	MBBL-600-6000, 2022-Sep-13	EX3DV4 - SN3978, 2022-05-17	DAE4ip Sn1703, 2022-04-28

Scan Setup

	Area Scan	Zoom Scan
Grid Extents [mm]	60.0 x 330.0	30.0 x 30.0 x 30.0
Grid Steps [mm]	15.0 x 15.0	3.1 x 3.1 x 1.2
Sensor Surface [mm]	3.0	1.4
Graded Grid	Yes	Yes
Grading Ratio	1.5	1.2
MAIA	Confirmed by MAIA	Confirmed by MAIA
Surface Detection	VMS + 6p	VMS + 6p
Scan Method	Measured	Measured

Measurement Results

	Area Scan	Zoom Scan
Date	2022-09-14, 15:25	2022-09-14, 15:47
psSAR1g [W/Kg]	0.476	0.518
psSAR10g [W/Kg]	0.278	0.302
Power Drift [dB]	-0.01	-0.05
Power Scaling	Disabled	Disabled
Scaling Factor [dB]		
TSL Correction	Positive Only	Positive Only
M2/M1 [%]		82.2
Dist 3dB Peak [mm]		8.8

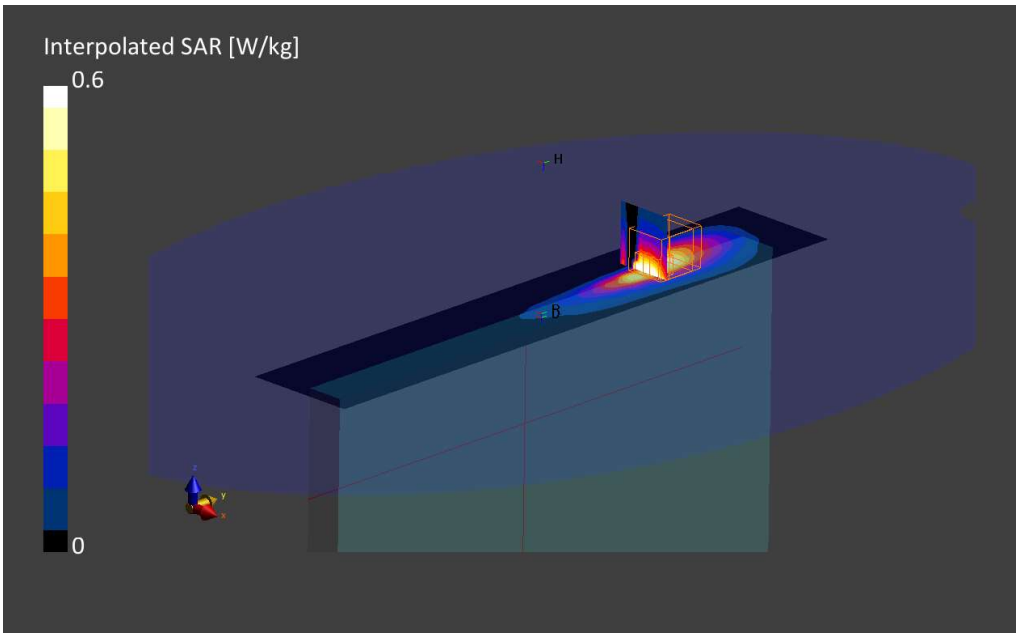

8. LTE Band 25, QPSK - 20MHz, CH26590, Top Edge

Device under Test Properties

Model, Manufacturer	Dimensions [mm]	S/N	DUT Type
HSN-I57C	205.0 x 295.0 x 20.0	C902NL009Y	Convertible PC

Exposure Conditions

Phantom Section, TSL	Position, Test Distance [mm]	Band	Group, UID	Frequency [MHz], Channel Number	Conversion Factor	TSL Conductivity [S/m]	TSL Permittivity
Flat, MSL	EDGE TOP, 0.00	Band 25, E-UTRA/FDD	LTE-FDD, 10297-AAD	1905.0, 26590	8.0	1.55	55.2

Hardware Setup

Phantom	TSL, Measured Date	Probe, Calibration Date	DAE, Calibration Date
ELI V8.0 (20deg probe tilt)	MBBL-600-6000, 2022-Sep-13	EX3DV4 - SN3978, 2022-05-17	DAE Sn1703, 2022-04-28

Scan Setup

	Area Scan	Zoom Scan
Grid Extents [mm]	60.0 x 330.0	30.0 x 30.0 x 30.0
Grid Steps [mm]	15.0 x 15.0	2.7 x 2.7 x 1.2
Sensor Surface [mm]	3.0	1.4
Graded Grid	Yes	Yes
Grading Ratio	1.5	1.2
MAIA	Confirmed by MAIA	Confirmed by MAIA
Surface Detection	VMS + 6p	VMS + 6p
Scan Method	Measured	Measured

Measurement Results

	Area Scan	Zoom Scan
Date	2022-09-15, 16:43	2022-09-15, 17:13
psSAR1g [W/Kg]	0.874	1.01
psSAR10g [W/Kg]	0.481	0.499
Power Drift [dB]	-0.02	0.08
Power Scaling	Disabled	Disabled
Scaling Factor [dB]		
TSL Correction	Positive Only	Positive Only
M2/M1 [%]		80.4
Dist 3dB Peak [mm]		7.6

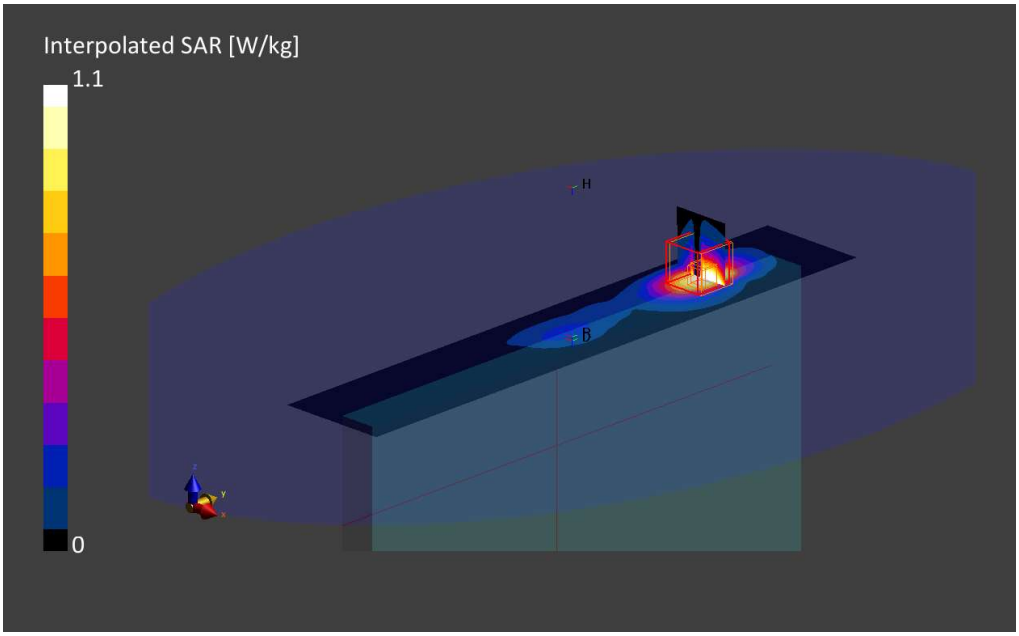

9. LTE Band 26, QPSK - 15MHz, CH26865, Top Edge

Device under Test Properties

Model, Manufacturer	Dimensions [mm]	S/N	DUT Type
HSN-I57C	205.0 x 295.0 x 20.0	C902NL009Y	Convertible PC

Exposure Conditions

Phantom Section, TSL	Position, Test Distance [mm]	Band	Group, UID	Frequency [MHz], Channel Number	Conversion Factor	TSL Conductivity [S/m]	TSL Permittivity
Flat, MSL	EDGE TOP, 0.00	Band 26 E-UTRA/FDD	LTE-FDD, 10181-CAE	831.5, 26865	9.81	0.94	56.1

Hardware Setup

Phantom	TSL, Measured Date	Probe, Calibration Date	DAE, Calibration Date
ELI V8.0 (20deg probe tilt)	MBBL-600-6000, 2022-Sep-13	EX3DV4 - SN3978, 2022-05-17	DAE4ip Sn1703, 2022-04-28

Scan Setup

	Area Scan	Zoom Scan
Grid Extents [mm]	60.0 x 330.0	30.0 x 30.0 x 30.0
Grid Steps [mm]	15.0 x 15.0	6.0 x 6.0 x 1.5
Sensor Surface [mm]	3.0	1.4
Graded Grid	Yes	Yes
Grading Ratio	1.5	1.5
MAIA	Confirmed by MAIA	Confirmed by MAIA
Surface Detection	VMS + 6p	VMS + 6p
Scan Method	Measured	Measured

Measurement Results

	Area Scan	Zoom Scan
Date	2022-09-14, 18:14	2022-09-14, 18:20
psSAR1g [W/Kg]	0.415	0.703
psSAR10g [W/Kg]	0.231	0.431
Power Drift [dB]	-0.07	0.01
Power Scaling	Disabled	Disabled
Scaling Factor [dB]		
TSL Correction	Positive Only	Positive Only
M2/M1 [%]		85.3
Dist 3dB Peak [mm]		12.1

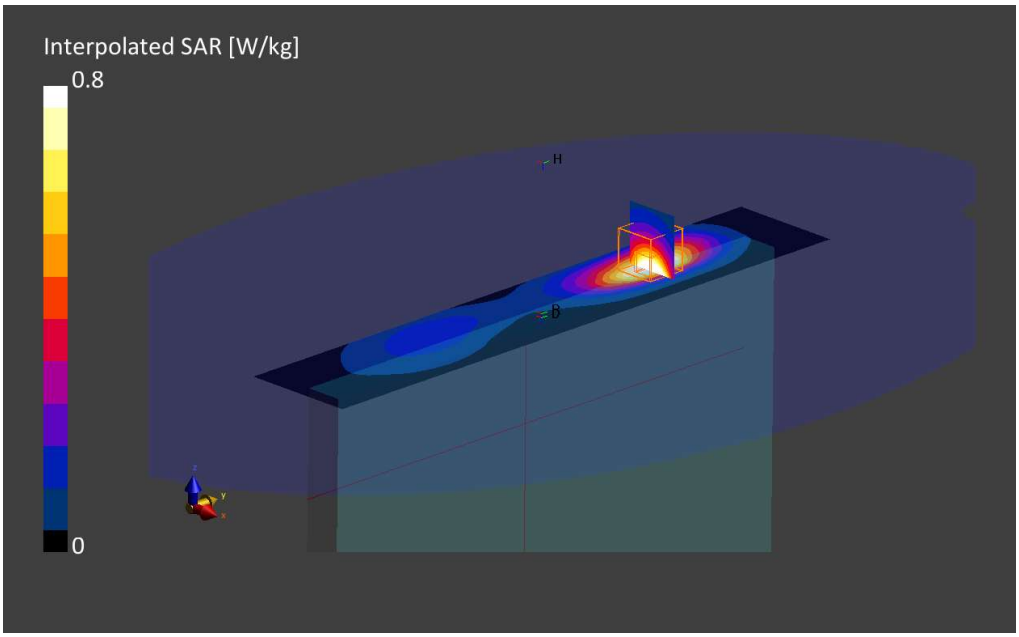

10. LTE Band 30 - 10MHz, CH27710, Top Edge

Device under Test Properties

Model, Manufacturer	Dimensions [mm]	S/N	DUT Type
HSN-I57C	205.0 x 295.0 x 20.0	C902NL009Y	Convertible PC

Exposure Conditions

Phantom Section, TSL	Position, Test Distance [mm]	Band	Group, UID	Frequency [MHz], Channel Number	Conversion Factor	TSL Conductivity [S/m]	TSL Permittivity
Flat, MSL	EDGE TOP, 0.00	Band 30, E-UTRA/FDD	LTE-FDD, 10175-CAG	2310.0, 27710	7.79	1.90	54.7

Hardware Setup

Phantom	TSL, Measured Date	Probe, Calibration Date	DAE, Calibration Date
ELI V8.0 (20deg probe tilt)	MBBL-600-6000, 2022-Sep-13	EX3DV4 - SN3978, 2022-05-17	DAE Sn1703, 2022-04-28

Scan Setup

	Area Scan	Zoom Scan
Grid Extents [mm]	60.0 x 340.0	30.0 x 30.0 x 30.0
Grid Steps [mm]	10.0 x 10.0	5.0 x 5.0 x 1.5
Sensor Surface [mm]	3.0	1.4
Graded Grid	Yes	Yes
Grading Ratio	1.5	1.5
MAIA	Confirmed by MAIA	Confirmed by MAIA
Surface Detection	VMS + 6p	VMS + 6p
Scan Method	Measured	Measured

Measurement Results

	Area Scan	Zoom Scan
Date	2022-09-14, 15:26	2022-09-14, 15:34
psSAR1g [W/Kg]	0.771	0.834
psSAR10g [W/Kg]	0.346	0.379
Power Drift [dB]	0.02	-0.00
Power Scaling	Disabled	Disabled
Scaling Factor [dB]		
TSL Correction	Positive Only	Positive Only
M2/M1 [%]		77.7
Dist 3dB Peak [mm]		7.3

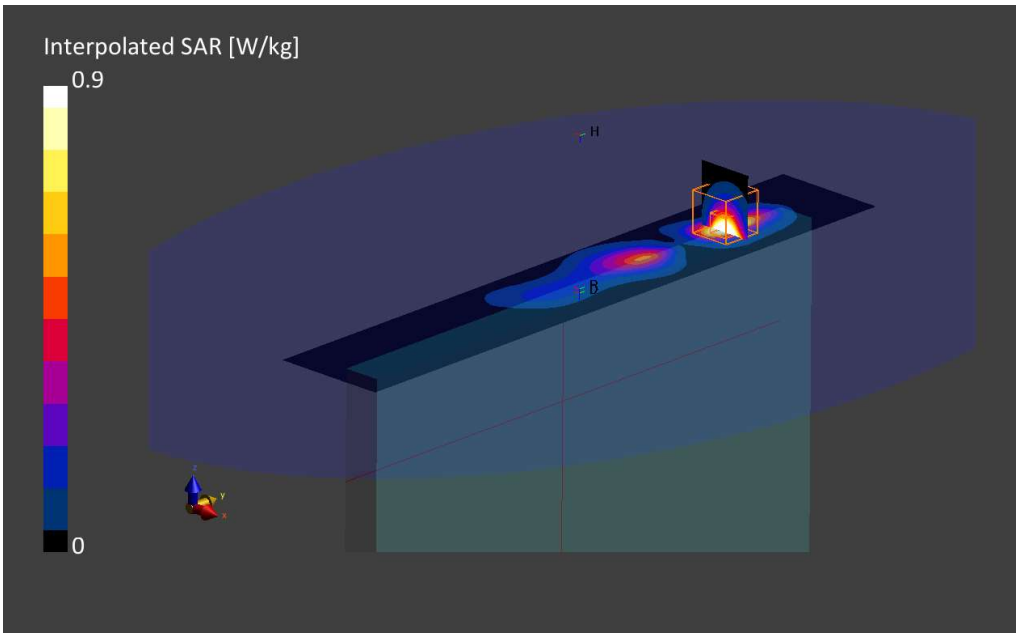

11. LTE Band 41, QPSK - 20MHz, CH40620, Top Edge

Device under Test Properties

Model, Manufacturer	Dimensions [mm]	S/N	DUT Type
HSN-I57C	205.0 x 295.0 x 20.0	C902NL009Y	Convertible PC

Exposure Conditions

Phantom Section, TSL	Position, Test Distance [mm]	Band	Group, UID	Frequency [MHz], Channel Number	Conversion Factor	TSL Conductivity [S/m]	TSL Permittivity
Flat, MSL	BACK, 0.00	Band 41, E-UTRA/TDD	LTE-TDD, 10435-AAF	2593.0, 40620	7.23	2.21	54.0

Hardware Setup

Phantom	TSL, Measured Date	Probe, Calibration Date	DAE, Calibration Date
ELI V8.0 (20deg probe tilt)	MBBL-600-6000, 2022-Sep-13	EX3DV4 - SN3978, 2022-05-17	DAE Sn1703, 2022-04-28

Scan Setup

	Area Scan	Zoom Scan
Grid Extents [mm]	160.0 x 80.0	30.0 x 30.0 x 30.0
Grid Steps [mm]	10.0 x 10.0	5.0 x 5.0 x 1.5
Sensor Surface [mm]	3.0	1.4
Graded Grid	Yes	Yes
Grading Ratio	1.5	1.5
MAIA	N/A	N/A
Surface Detection	VMS + 6p	VMS + 6p
Scan Method	Measured	Measured

Measurement Results

	Area Scan	Zoom Scan
Date	2022-09-15, 9:44	2022-09-15, 9:52
psSAR1g [W/Kg]	0.594	0.618
psSAR10g [W/Kg]	0.253	0.267
Power Drift [dB]	0.07	0.02
Power Scaling	Disabled	Disabled
Scaling Factor [dB]		
TSL Correction	Positive Only	Positive Only
M2/M1 [%]		77.4
Dist 3dB Peak [mm]		8.0

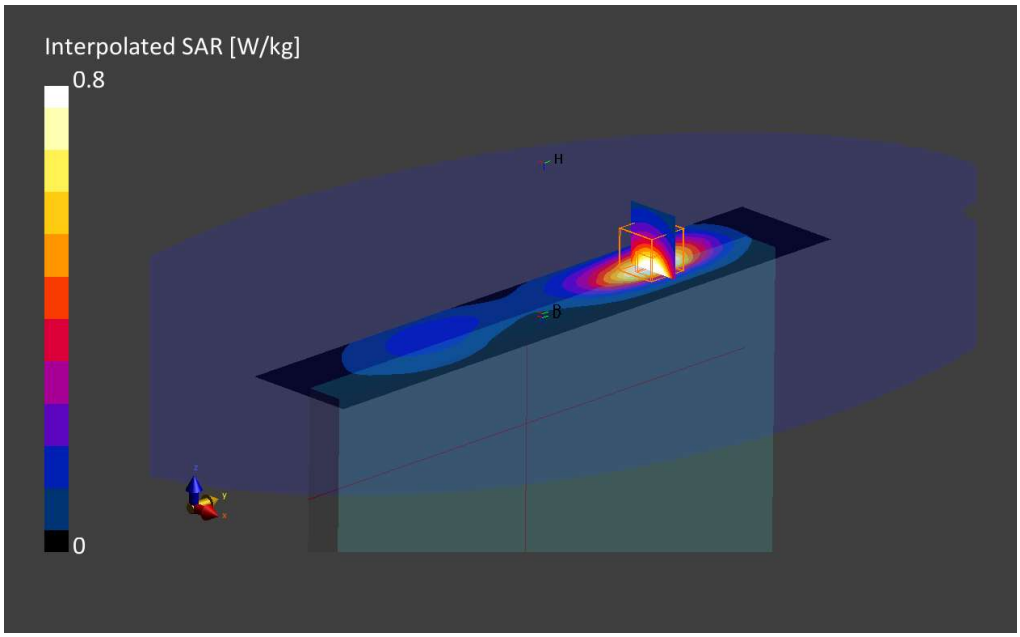

12. LTE Band 48 - 20MHz, CH55990, Top Edge

Device under Test Properties

Model, Manufacturer	Dimensions [mm]	S/N	DUT Type
HSN-I57C	205.0 x 295.0 x 20.0	C902NL009Y	Convertible PC

Exposure Conditions

Phantom Section, TSL	Position, Test Distance [mm]	Band	Group, UID	Frequency [MHz], Channel Number	Conversion Factor	TSL Conductivity [S/m]	TSL Permittivity
Flat, MSL	BACK, 0.00	Band 48, E-UTRA/TDD	LTE-TDD, 10494-AAF	3625.0, 55990	6.89	3.30	51.5

Hardware Setup

Phantom	TSL, Measured Date	Probe, Calibration Date	DAE, Calibration Date
ELI V8.0 (20deg probe tilt)	MBBL-600-6000, 2022-Sep-13	EX3DV4 - SN3978, 2022-05-17	DAE4ip Sn1703, 2022-04-28

Scan Setup

	Area Scan	Zoom Scan
Grid Extents [mm]	160.0 x 80.0	28.0 x 28.0 x 28.0
Grid Steps [mm]	10.0 x 10.0	5.0 x 5.0 x 1.4
Sensor Surface [mm]	3.0	1.4
Graded Grid	Yes	Yes
Grading Ratio	1.5	1.5
MAIA	Confirmed by MAIA	Confirmed by MAIA
Surface Detection	VMS + 6p	VMS + 6p
Scan Method	Measured	Measured

Measurement Results

	Area Scan	Zoom Scan
Date	2022-09-15, 10:13	2022-09-15, 10:21
psSAR1g [W/Kg]	0.282	0.352
psSAR10g [W/Kg]	0.097	0.132
Power Drift [dB]	0.01	0.02
Power Scaling	Disabled	Disabled
Scaling Factor [dB]		
TSL Correction	Positive Only	Positive Only
M2/M1 [%]		77.4
Dist 3dB Peak [mm]		9.4

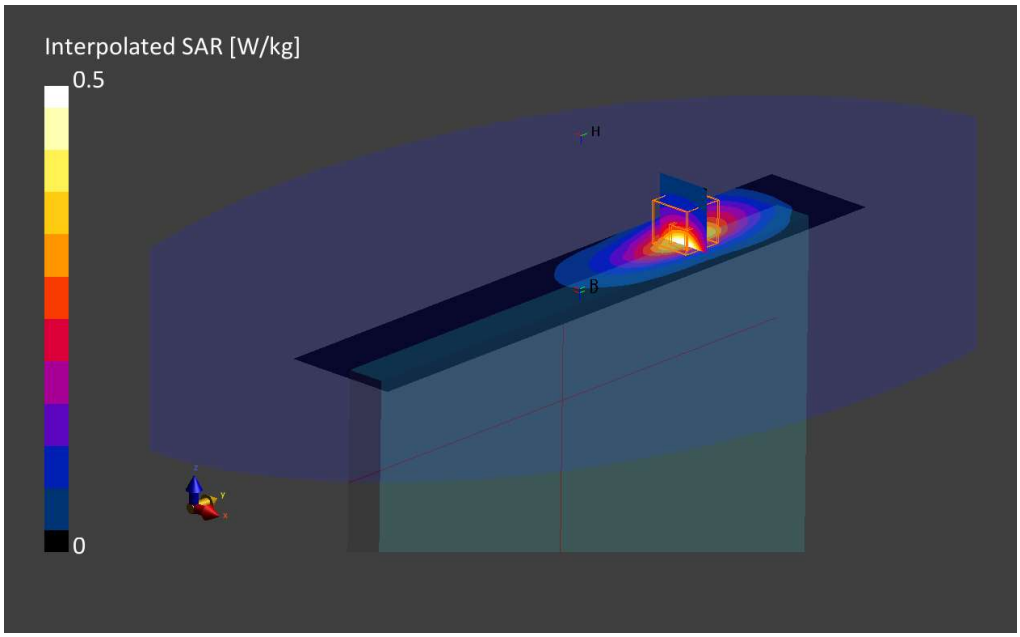

13. LTE Band 66 - 20MHz, CH132322, Top Edge

Device under Test Properties

Model, Manufacturer	Dimensions [mm]	S/N	DUT Type
HSN-I57C	205.0 x 295.0 x 20.0	C902NL009Y	Convertible PC

Exposure Conditions

Phantom Section, TSL	Position, Test Distance [mm]	Band	Group, UID	Frequency [MHz], Channel Number	Conversion Factor	TSL Conductivity [S/m]	TSL Permittivity
Flat, MSL	EDGE TOP, 0.00	Band 66, E-UTRA/FDD	LTE-FDD, 10100-CAE	1745.0, 132322	8.42	1.44	54.1

Hardware Setup

Phantom	TSL, Measured Date	Probe, Calibration Date	DAE, Calibration Date
ELI V8.0 (20deg probe tilt)	MBBL-600-6000, 2022-Sep-19	EX3DV4 - SN3978, 2022-05-17	DAE4ip Sn1703, 2022-04-28

Scan Setup

	Area Scan	Zoom Scan
Grid Extents [mm]	60.0 x 330.0	30.0 x 30.0 x 30.0
Grid Steps [mm]	15.0 x 15.0	6.0 x 6.0 x 1.5
Sensor Surface [mm]	3.0	1.4
Graded Grid	Yes	Yes
Grading Ratio	1.5	1.5
MAIA	Confirmed by MAIA	Confirmed by MAIA
Surface Detection	VMS + 6p	VMS + 6p
Scan Method	Measured	Measured

Measurement Results

	Area Scan	Zoom Scan
Date	2022-09-21, 14:15	2022-09-21, 14:21
psSAR1g [W/Kg]	0.740	0.831
psSAR10g [W/Kg]	0.351	0.467
Power Drift [dB]	0.02	0.01
Power Scaling	Disabled	Disabled
Scaling Factor [dB]		
TSL Correction	Positive Only	Positive Only
M2/M1 [%]		81.7
Dist 3dB Peak [mm]		10.8

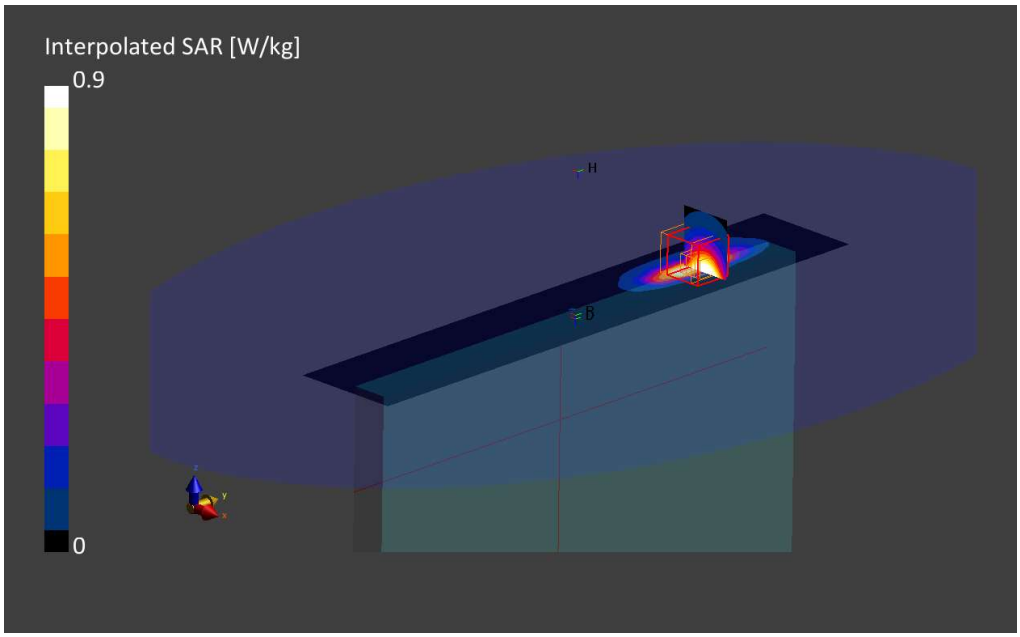

14. System Check Body Liquid 750MHz

Device under Test Properties

Model, Manufacturer	Dimensions [mm]	S/N	DUT Type
Dipole 750MHz, SPEAG	50.0 x 10.0 x 8.0	1136	Validation Dipole

Exposure Conditions

Phantom Section, TSL	Position, Test Distance [mm]	Band	Group, UID	Frequency [MHz], Channel Number	Conversion Factor	TSL Conductivity [S/m]	TSL Permittivity
Flat, MSL	,		, 0--	750.0, 0	10.08	0.92	56.3

Hardware Setup

Phantom	TSL, Measured Date	Probe, Calibration Date	DAE, Calibration Date
ELI V8.0 (20deg probe tilt)	MBBL-600-6000, 2022-Sep-13	EX3DV4 - SN3978, 2022-05-17	DAE4ip Sn1703, 2022-04-28

Scan Setup

	Area Scan	Zoom Scan
Grid Extents [mm]	40.0 x 90.0	30.0 x 30.0 x 30.0
Grid Steps [mm]	10.0 x 15.0	6.0 x 6.0 x 1.5
Sensor Surface [mm]	3.0	1.4
Graded Grid	Yes	Yes
Grading Ratio	1.5	1.5
MAIA	Confirmed by MAIA	Confirmed by MAIA
Surface Detection	VMS + 6p	VMS + 6p
Scan Method	Measured	Measured

Measurement Results

	Area Scan	Zoom Scan
Date	2022-09-14, 10:46	2022-09-14, 10:51
psSAR1g [W/Kg]	0.405	0.411
psSAR10g [W/Kg]	0.270	0.274
Power Drift [dB]	0.01	-0.00
Power Scaling	Disabled	Disabled
Scaling Factor [dB]		
TSL Correction	Positive Only	Positive Only
M2/M1 [%]		85.6
Dist 3dB Peak [mm]		18.3

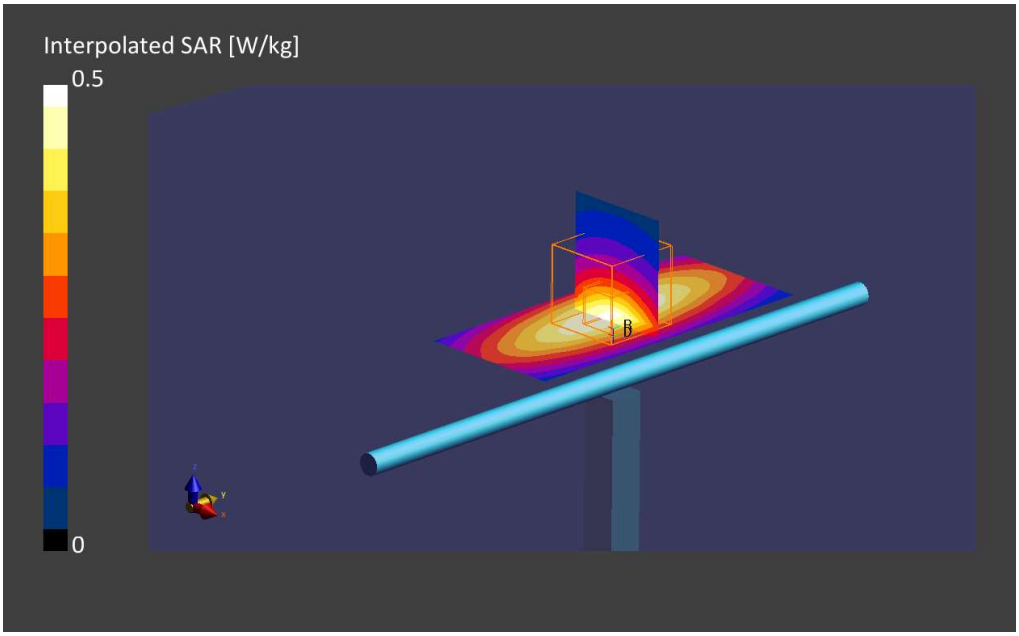

15. System Check Body Liquid 835MHz

Device under Test Properties

Model, Manufacturer	Dimensions [mm]	S/N	DUT Type
Dipole 835MHz, SPEAG	50.0 x 10.0 x 10.0	4d192	Validation Dipole

Exposure Conditions

Phantom Section, TSL	Position, Test Distance [mm]	Band	Group, UID	Frequency [MHz], Channel Number	Conversion Factor	TSL Conductivity [S/m]	TSL Permittivity
Flat, MSL	,		, 0--	835.0, 0	9.81	0.95	56.1

Hardware Setup

Phantom	TSL, Measured Date	Probe, Calibration Date	DAE, Calibration Date
ELI V8.0 (20deg probe tilt)	MBBL-600-6000, 2022-Sep-13	EX3DV4 - SN3978, 2022-05-17	DAE4ip Sn1703, 2022-04-28

Scan Setup

	Area Scan	Zoom Scan
Grid Extents [mm]	40.0 x 90.0	30.0 x 30.0 x 30.0
Grid Steps [mm]	10.0 x 15.0	6.0 x 6.0 x 1.5
Sensor Surface [mm]	3.0	1.4
Graded Grid	Yes	Yes
Grading Ratio	1.5	1.5
MAIA	Confirmed by MAIA	Confirmed by MAIA
Surface Detection	VMS + 6p	VMS + 6p
Scan Method	Measured	Measured

Measurement Results

	Area Scan	Zoom Scan
Date	2022-09-14, 10:58	2022-09-14, 11:03
psSAR1g [W/Kg]	0.480	0.485
psSAR10g [W/Kg]	0.317	0.322
Power Drift [dB]	0.00	0.01
Power Scaling	Disabled	Disabled
Scaling Factor [dB]		
TSL Correction	Positive Only	Positive Only
M2/M1 [%]		87.1
Dist 3dB Peak [mm]		15.2

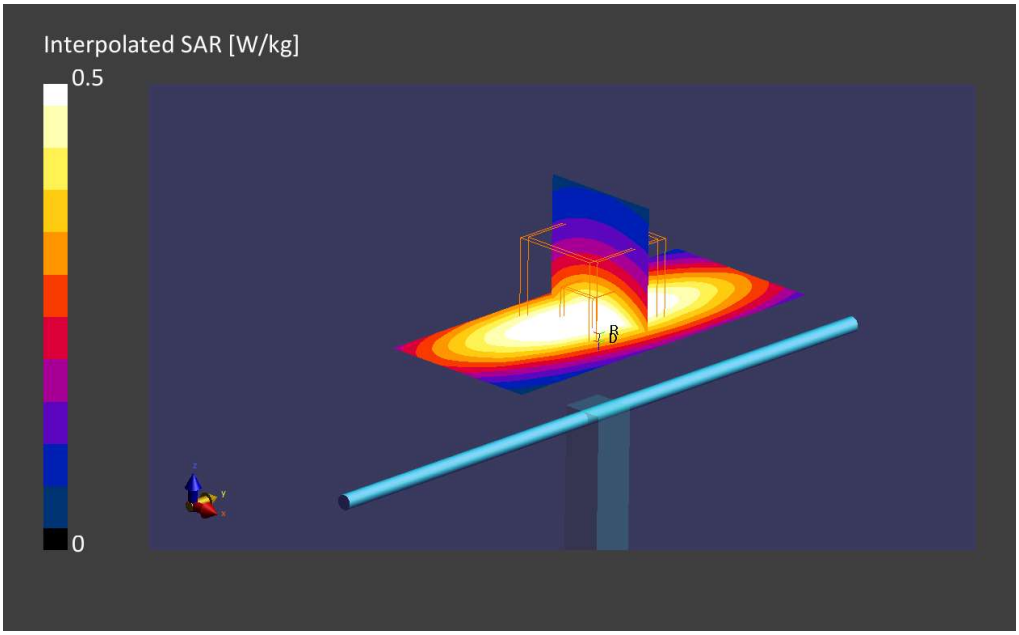

16. System Check Body Liquid 1750MHz – 21-09-2022

Device under Test Properties

Model, Manufacturer	Dimensions [mm]	S/N	DUT Type
Dipole 1750MHz, SPEAG	50.0 x 10.0 x 20.0	1133	Validation Dipole

Exposure Conditions

Phantom Section, TSL	Position, Test Distance [mm]	Band	Group, UID	Frequency [MHz], Channel Number	Conversion Factor	TSL Conductivity [S/m]	TSL Permittivity
Flat, MSL	,		, 0--	1750.0, 0	8.42	1.44	54.1

Hardware Setup

Phantom	TSL, Measured Date	Probe, Calibration Date	DAE, Calibration Date
ELI V8.0 (20deg probe tilt)	MBBL-600-6000, 2022-Sep-19	EX3DV4 - SN3978, 2022-05-17	DAE4ip Sn1703, 2022-04-28

Scan Setup

	Area Scan	Zoom Scan
Grid Extents [mm]	40.0 x 90.0	30.0 x 30.0 x 30.0
Grid Steps [mm]	10.0 x 15.0	6.0 x 6.0 x 1.5
Sensor Surface [mm]	3.0	1.4
Graded Grid	Yes	Yes
Grading Ratio	1.5	1.5
MAIA	Confirmed by MAIA	Confirmed by MAIA
Surface Detection	VMS + 6p	VMS + 6p
Scan Method	Measured	Measured

Measurement Results

	Area Scan	Zoom Scan
Date	2022-09-21, 17:57	2022-09-21, 18:02
psSAR1g [W/Kg]	1.67	1.67
psSAR10g [W/Kg]	0.875	0.894
Power Drift [dB]	0.00	-0.01
Power Scaling	Disabled	Disabled
Scaling Factor [dB]		
TSL Correction	Positive Only	Positive Only
M2/M1 [%]		81.9
Dist 3dB Peak [mm]		9.7

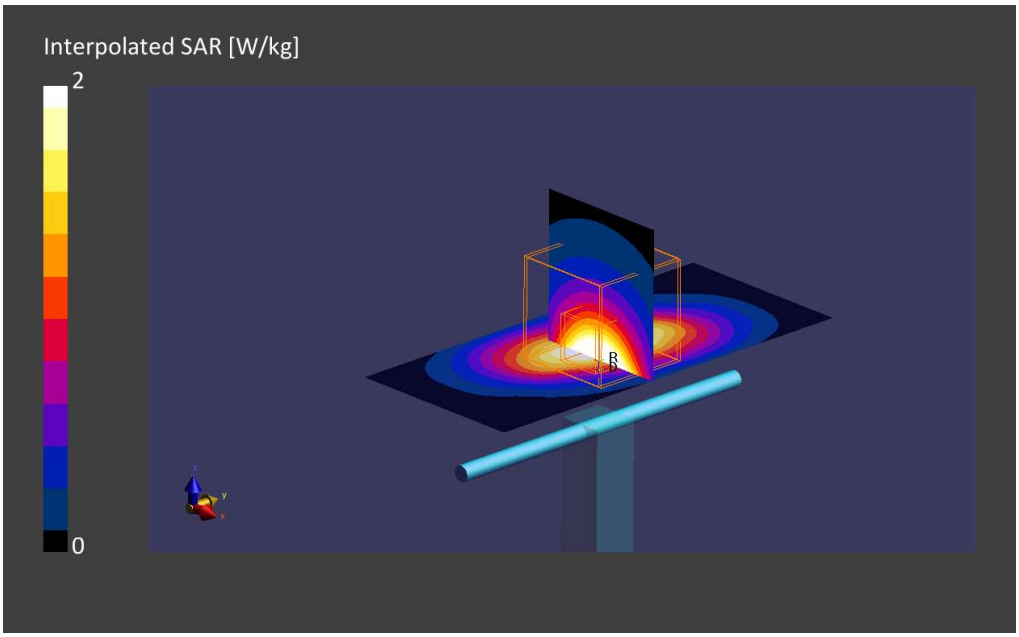

17. System Check Body Liquid 1750MHz – 23-09-2022

Device under Test Properties

Model, Manufacturer	Dimensions [mm]	S/N	DUT Type
Dipole 1750MHz, SPEAG	50.0 x 10.0 x 20.0	1133	Validation Dipole

Exposure Conditions

Phantom Section, TSL	Position, Test Distance [mm]	Band	Group, UID	Frequency [MHz], Channel Number	Conversion Factor	TSL Conductivity [S/m]	TSL Permittivity
Flat, MSL	,		, 0--	1750.0, 0	8.42	1.43	53.6

Hardware Setup

Phantom	TSL, Measured Date	Probe, Calibration Date	DAE, Calibration Date
ELI V8.0 (20deg probe tilt)	MBBL-600-6000, 2022-Sep-23	EX3DV4 - SN3978, 2022-05-17	DAE4ip Sn1703, 2022-04-28

Scan Setup

	Area Scan	Zoom Scan
Grid Extents [mm]	40.0 x 90.0	30.0 x 30.0 x 30.0
Grid Steps [mm]	10.0 x 15.0	6.0 x 6.0 x 1.5
Sensor Surface [mm]	3.0	1.4
Graded Grid	Yes	Yes
Grading Ratio	1.5	1.5
MAIA	Confirmed by MAIA	Confirmed by MAIA
Surface Detection	VMS + 6p	VMS + 6p
Scan Method	Measured	Measured

Measurement Results

	Area Scan	Zoom Scan
Date	2022-09-23, 16:57	2022-09-23, 17:02
psSAR1g [W/Kg]	1.69	1.73
psSAR10g [W/Kg]	0.922	0.925
Power Drift [dB]	-0.04	-0.00
Power Scaling	Disabled	Disabled
Scaling Factor [dB]		
TSL Correction	Positive Only	Positive Only
M2/M1 [%]		82.3
Dist 3dB Peak [mm]		9.6

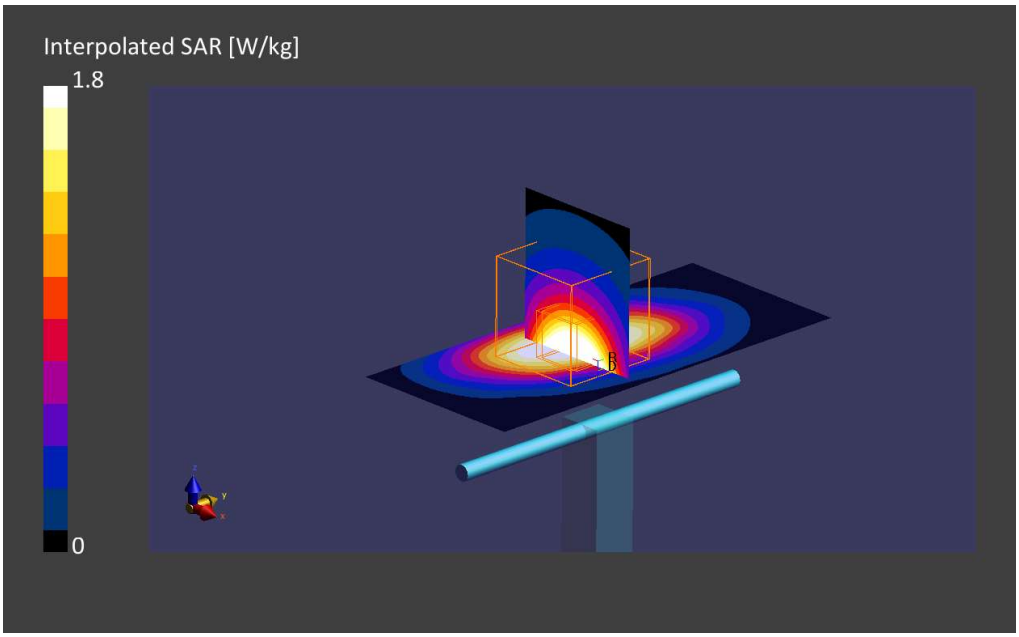

18. System Check Body Liquid 1900MHz – 2022-09-14

Device under Test Properties

Model, Manufacturer	Dimensions [mm]	S/N	DUT Type
Dipole 1900MHz, SPEAG	50.0 x 10.0 x 8.0	5d197	Validation Dipole

Exposure Conditions

Phantom Section, TSL	Position, Test Distance [mm]	Band	Group, UID	Frequency [MHz], Channel Number	Conversion Factor	TSL Conductivity [S/m]	TSL Permittivity
Flat, MSL	,		, 0--	1900.0, 0	8.0	1.55	55.16

Hardware Setup

Phantom	TSL, Measured Date	Probe, Calibration Date	DAE, Calibration Date
ELI V8.0 (20deg probe tilt)	MBBL-600-6000, 2022-Sep-13	EX3DV4 - SN3978, 2022-05-17	DAE Sn1703, 2022-04-28

Scan Setup

	Area Scan	Zoom Scan
Grid Extents [mm]	40.0 x 90.0	30.0 x 30.0 x 30.0
Grid Steps [mm]	10.0 x 15.0	6.0 x 6.0 x 1.5
Sensor Surface [mm]	3.0	1.4
Graded Grid	Yes	Yes
Grading Ratio	1.5	1.5
MAIA	Confirmed by MAIA	Confirmed by MAIA
Surface Detection	VMS + 6p	VMS + 6p
Scan Method	Measured	Measured

Measurement Results

	Area Scan	Zoom Scan
Date	2022-09-14, 11:09	2022-09-14, 11:14
psSAR1g [W/Kg]	1.81	1.83
psSAR10g [W/Kg]	0.925	0.961
Power Drift [dB]	-0.00	0.02
Power Scaling	Disabled	Disabled
Scaling Factor [dB]		
TSL Correction	Positive Only	Positive Only
M2/M1 [%]		80.5
Dist 3dB Peak [mm]		9.6

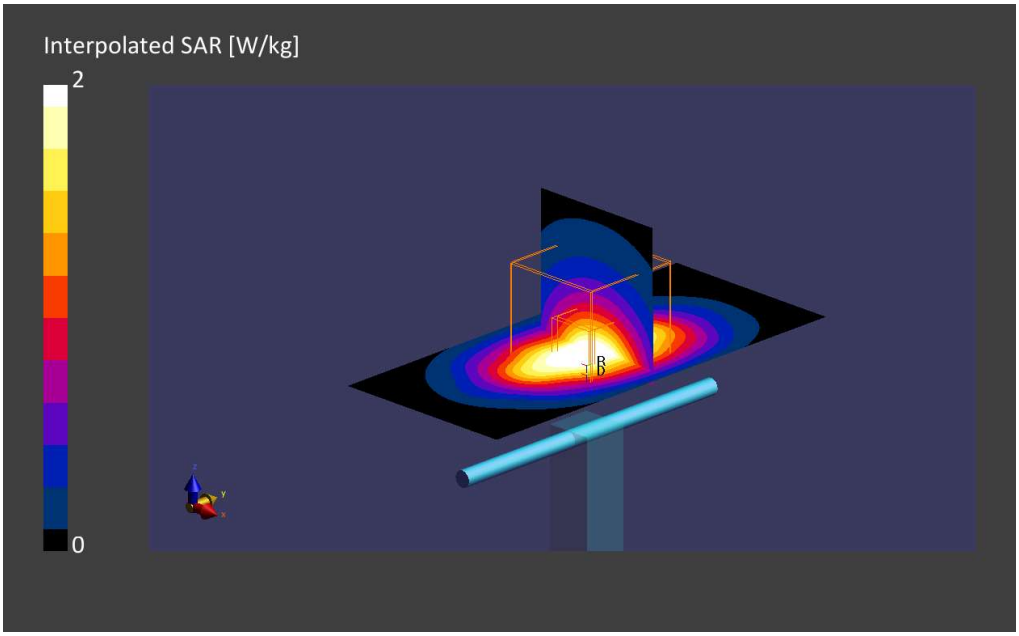

19. System Check Body Liquid 1900MHz – 2022-09-21

Device under Test Properties

Model, Manufacturer	Dimensions [mm]	S/N	DUT Type
Dipole 1900MHz, SPEAG	50.0 x 10.0 x 8.0	5d197	Validation Dipole

Exposure Conditions

Phantom Section, TSL	Position, Test Distance [mm]	Band	Group, UID	Frequency [MHz], Channel Number	Conversion Factor	TSL Conductivity [S/m]	TSL Permittivity
Flat, MSL	,		, 0--	1900.0, 0	8.06	1.55	53.9

Hardware Setup

Phantom	TSL, Measured Date	Probe, Calibration Date	DAE, Calibration Date
ELI V8.0 (20deg probe tilt)	MBBL-600-6000, 2022-Sep-19	EX3DV4 - SN3978, 2022-05-17	DAE Sn1703, 2022-04-28

Scan Setup

	Area Scan	Zoom Scan
Grid Extents [mm]	40.0 x 90.0	30.0 x 30.0 x 30.0
Grid Steps [mm]	10.0 x 15.0	6.0 x 6.0 x 1.5
Sensor Surface [mm]	3.0	1.4
Graded Grid	Yes	Yes
Grading Ratio	1.5	1.5
MAIA	Confirmed by MAIA	Confirmed by MAIA
Surface Detection	VMS + 6p	VMS + 6p
Scan Method	Measured	Measured

Measurement Results

	Area Scan	Zoom Scan
Date	2022-09-21, 15:33	2022-09-21, 15:38
psSAR1g [W/Kg]	1.91	1.99
psSAR10g [W/Kg]	1.02	1.04
Power Drift [dB]	-0.01	0.00
Power Scaling	Disabled	Disabled
Scaling Factor [dB]		
TSL Correction	Positive Only	Positive Only
M2/M1 [%]		81.6
Dist 3dB Peak [mm]		9.6

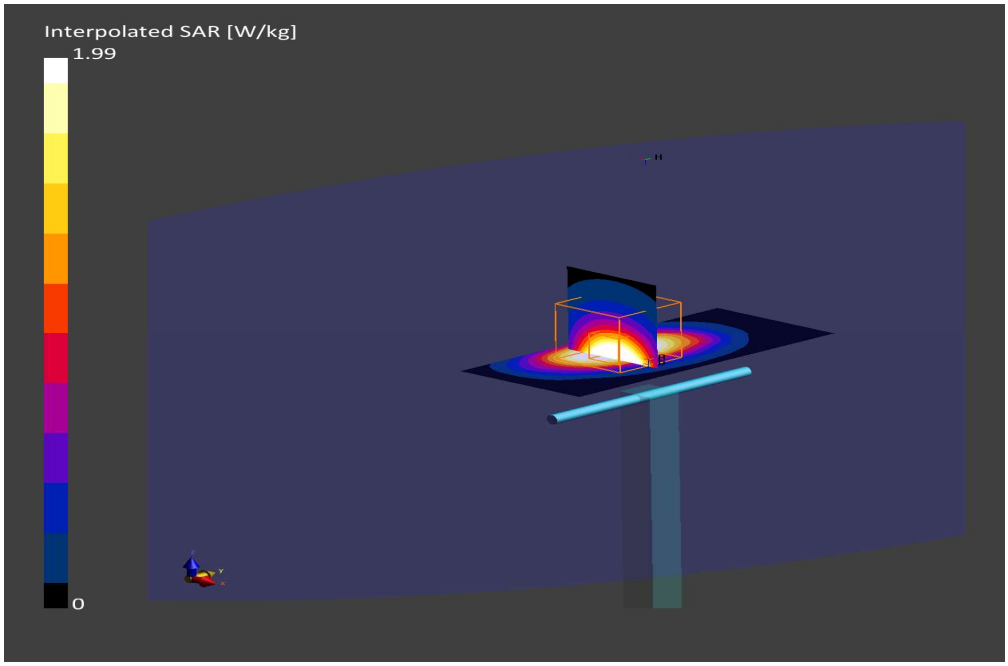

20. System Check Body Liquid 2300MHz

Device under Test Properties

Model, Manufacturer	Dimensions [mm]	S/N	DUT Type
D2300MHZ, SPEAG	50.0 x 10.0 x 8.0	1046	Validation Dipole

Exposure Conditions

Phantom Section, TSL	Position, Test Distance [mm]	Band	Group, UID	Frequency [MHz], Channel Number	Conversion Factor	TSL Conductivity [S/m]	TSL Permittivity
Flat, MSL	,		, 0--	2300.0, 0	7.79	1.90	54.7

Hardware Setup

Phantom	TSL, Measured Date	Probe, Calibration Date	DAE, Calibration Date
ELI V8.0 (20deg probe tilt)	MBBL-600-6000, 2022-Sep-13	EX3DV4 - SN3978, 2022-05-17	DAE Sn1703, 2022-04-28

Scan Setup

	Area Scan	Zoom Scan
Grid Extents [mm]	40.0 x 80.0	30.0 x 30.0 x 30.0
Grid Steps [mm]	10.0 x 10.0	5.0 x 5.0 x 1.5
Sensor Surface [mm]	3.0	1.4
Graded Grid	Yes	Yes
Grading Ratio	1.5	1.5
MAIA	Confirmed by MAIA	Confirmed by MAIA
Surface Detection	VMS + 6p	VMS + 6p
Scan Method	Measured	Measured

Measurement Results

	Area Scan	Zoom Scan
Date	2022-09-14, 11:20	2022-09-14, 11:26
psSAR1g [W/Kg]	2.11	2.19
psSAR10g [W/Kg]	1.03	1.04
Power Drift [dB]	0.00	0.01
Power Scaling	Disabled	Disabled
Scaling Factor [dB]		
TSL Correction	Positive Only	Positive Only
M2/M1 [%]		79.8
Dist 3dB Peak [mm]		8.9

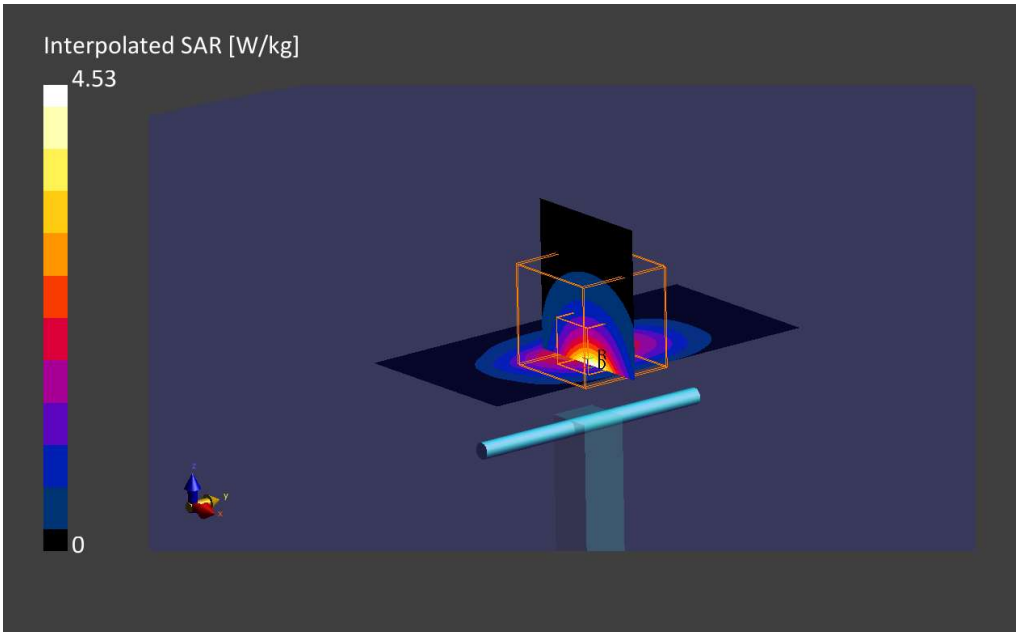

21. System Check Body Liquid 2600MHz – 2022-09-15

Device under Test Properties

Model, Manufacturer	Dimensions [mm]	S/N	DUT Type
D2600MHz, SPEAG	50.0 x 10.0 x 8.0	1100	Validation Dipole

Exposure Conditions

Phantom Section, TSL	Position, Test Distance [mm]	Band	Group, UID	Frequency [MHz], Channel Number	Conversion Factor	TSL Conductivity [S/m]	TSL Permittivity
Flat, MSL	,		, 0--	2600.0, 0	7.23	2.22	54.1

Hardware Setup

Phantom	TSL, Measured Date	Probe, Calibration Date	DAE, Calibration Date
ELI V8.0 (20deg probe tilt) -	MBBL-600-6000, 2022-Sep-13	EX3DV4 - SN3978, 2022-05-17	DAE4 Sn1703, 2022-04-28

Scan Setup

	Area Scan	Zoom Scan
Grid Extents [mm]	40.0 x 80.0	30.0 x 30.0 x 30.0
Grid Steps [mm]	10.0 x 10.0	5.0 x 5.0 x 1.5
Sensor Surface [mm]	3.0	1.4
Graded Grid	Yes	Yes
Grading Ratio	1.5	1.5
MAIA	Confirmed by MAIA	Confirmed by MAIA
Surface Detection	VMS + 6p	VMS + 6p
Scan Method	Measured	Measured

Measurement Results

	Area Scan	Zoom Scan
Date	2022-09-15, 12:35	2022-09-15, 12:41
psSAR1g [W/Kg]	2.50	2.67
psSAR10g [W/Kg]	1.15	1.19
Power Drift [dB]	-0.01	-0.01
Power Scaling	Disabled	Disabled
Scaling Factor [dB]		
TSL Correction	No correction	No correction
M2/M1 [%]		77.1
Dist 3dB Peak [mm]		8.5

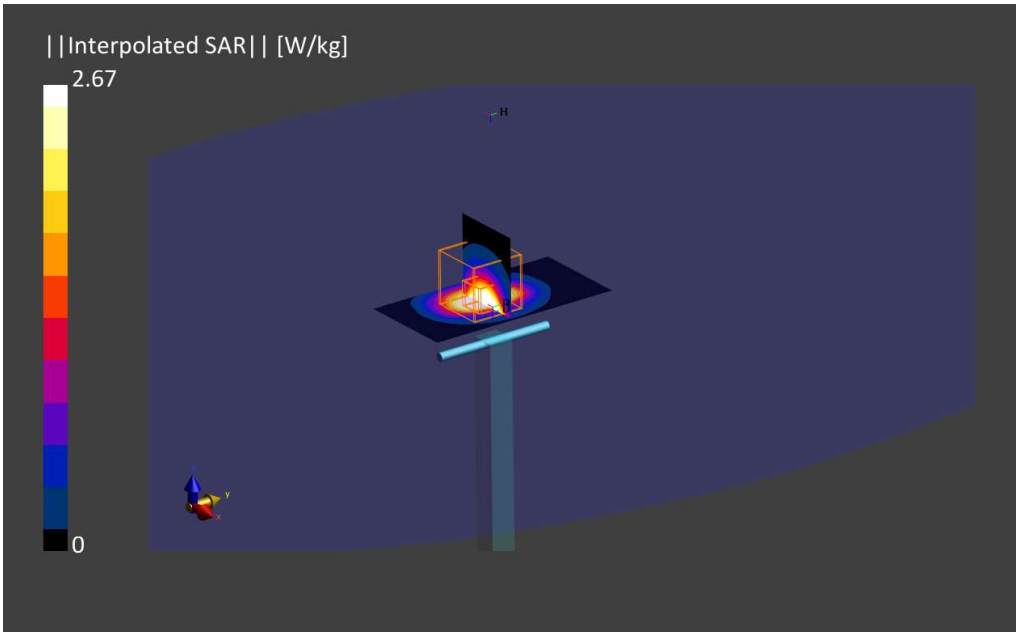

22. System Check Body Liquid 2600MHz – 2022-09-21

Device under Test Properties

Model, Manufacturer	Dimensions [mm]	S/N	DUT Type
D2600MHz, SPEAG	50.0 x 10.0 x 8.0	1100	Validation Dipole

Exposure Conditions

Phantom Section, TSL	Position, Test Distance [mm]	Band	Group, UID	Frequency [MHz], Channel Number	Conversion Factor	TSL Conductivity [S/m]	TSL Permittivity
Flat, MSL	,		, 0--	2600.0, 0	7.23	2.18	52.8

Hardware Setup

Phantom	TSL, Measured Date	Probe, Calibration Date	DAE, Calibration Date
ELI V8.0 (20deg probe tilt) -	MBBL-600-6000, 2022-Sep-19	EX3DV4 - SN3978, 2022-05-17	DAE4 Sn1703, 2022-04-28

Scan Setup

	Area Scan	Zoom Scan
Grid Extents [mm]	40.0 x 80.0	30.0 x 30.0 x 30.0
Grid Steps [mm]	10.0 x 10.0	5.0 x 5.0 x 1.5
Sensor Surface [mm]	3.0	1.4
Graded Grid	Yes	Yes
Grading Ratio	1.5	1.5
MAIA	Confirmed by MAIA	Confirmed by MAIA
Surface Detection	VMS + 6p	VMS + 6p
Scan Method	Measured	Measured

Measurement Results

	Area Scan	Zoom Scan
Date	2022-09-21, 10:11	2022-0-21, 10:17
psSAR1g [W/Kg]	2.41	2.56
psSAR10g [W/Kg]	1.12	1.15
Power Drift [dB]	-0.01	-0.01
Power Scaling	Disabled	Disabled
Scaling Factor [dB]		
TSL Correction	No correction	No correction
M2/M1 [%]		77.1
Dist 3dB Peak [mm]		8.5

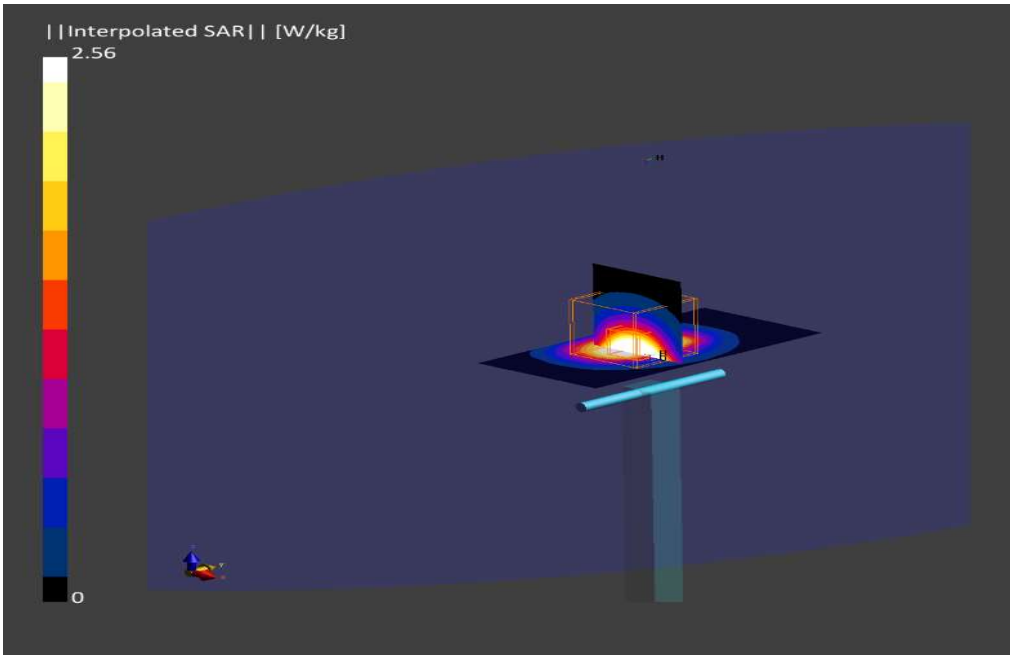

23. System Check Body Liquid 3700MHz

Device under Test Properties

Model, Manufacturer	Dimensions [mm]	S/N	DUT Type
D3700MHz, SPEAG	50.0 x 10.0 x 17.0	1093	Validation Dipole

Exposure Conditions

Phantom Section, TSL	Position, Test Distance [mm]	Band	Group, UID	Frequency [MHz], Channel Number	Conversion Factor	TSL Conductivity [S/m]	TSL Permittivity
Flat, MSL	,		, 0--	3700.0, 0	6.89	3.41	51.3

Hardware Setup

Phantom	TSL, Measured Date	Probe, Calibration Date	DAE, Calibration Date
ELI V8.0 (20deg probe tilt)	MBBL-600-6000, 2022-Sep-13	EX3DV4 - SN3978, 2022-05-17	DAE Sn1703, 2022-04-28

Scan Setup

	Area Scan	Zoom Scan
Grid Extents [mm]	40.0 x 80.0	28.0 x 28.0 x 28.0
Grid Steps [mm]	10.0 x 10.0	5.0 x 5.0 x 1.4
Sensor Surface [mm]	3.0	1.4
Graded Grid	Yes	Yes
Grading Ratio	1.5	1.5
MAIA	Confirmed by MAIA	Confirmed by MAIA
Surface Detection	VMS + 6p	VMS + 6p
Scan Method	Measured	Measured

Measurement Results

	Area Scan	Zoom Scan
Date	2022-09-15, 16:46	2022-09-15, 16:52
psSAR1g [W/Kg]	2.55	2.84
psSAR10g [W/Kg]	1.00	1.04
Power Drift [dB]	0.00	-0.00
Power Scaling	Disabled	Disabled
Scaling Factor [dB]		
TSL Correction	No correction	No correction
M2/M1 [%]		72.9
Dist 3dB Peak [mm]		8.0

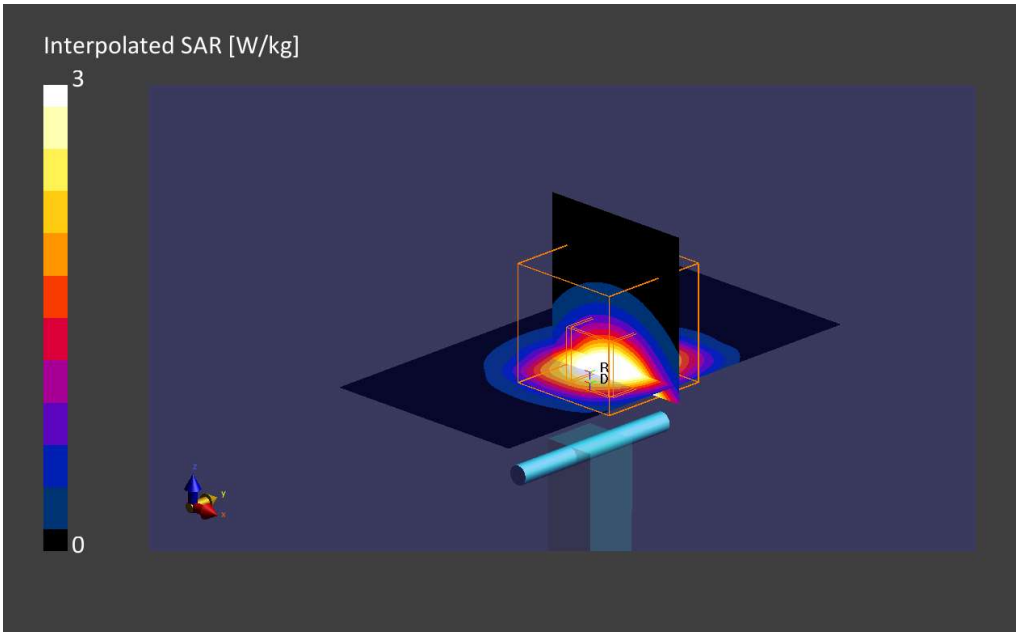

Annex D. TSL Dielectric Parameters

D.1 Body 650MHz-3900MHz

Freq. (MHz)	Target		2022-09-13		2022-09-19		2022-09-23	
			Measured					
	ε'(F/m)	σ(S/m)	ε'_1(F/m)	σ_1(S/m)	ε'_2(F/m)	σ_2(S/m)	ε'3(F/m)	σ3(S/m)
650.0	55.92	0.96	56.58	0.88	56.04	0.87	55.38	0.88
700.0	55.73	0.96	56.43	0.9	55.89	0.89	55.21	0.9
750.0	55.53	0.96	56.3	0.92	55.76	0.9	55.08	0.91
800.0	55.34	0.97	56.2	0.94	55.65	0.92	54.96	0.93
850.0	55.15	0.99	56.09	0.96	55.54	0.94	54.85	0.95
900.0	55.0	1.05	56.01	0.98	55.45	0.96	54.76	0.97
950.0	54.93	1.08	55.94	1.0	55.35	0.99	54.68	0.99
1000.0	54.84	1.1	55.87	1.02	55.26	1.01	54.6	1.01
1050.0	54.75	1.12	55.82	1.04	55.18	1.03	54.52	1.04
1100.0	54.65	1.14	55.77	1.07	55.1	1.06	54.44	1.06
1150.0	54.56	1.17	55.71	1.09	55.0	1.08	54.36	1.08
1200.0	54.47	1.19	55.66	1.12	54.92	1.11	54.29	1.11
1250.0	54.37	1.21	55.62	1.14	54.83	1.13	54.21	1.13
1300.0	54.28	1.23	55.58	1.17	54.75	1.16	54.14	1.16
1350.0	54.19	1.26	55.56	1.2	54.67	1.19	54.09	1.19
1400.0	54.09	1.28	55.54	1.23	54.6	1.22	54.03	1.22
1450.0	54.0	1.3	55.51	1.25	54.52	1.25	53.97	1.24
1500.0	53.94	1.33	55.49	1.28	54.44	1.28	53.91	1.27
1550.0	53.88	1.36	55.45	1.31	54.36	1.31	53.84	1.3
1600.0	53.81	1.39	55.41	1.34	54.29	1.34	53.78	1.33
1650.0	53.69	1.43	55.38	1.38	54.21	1.37	53.71	1.37
1700.0	53.56	1.46	55.34	1.41	54.13	1.41	53.64	1.40
1750.0	53.43	1.49	55.31	1.44	54.06	1.44	53.58	1.43
1800.0	53.3	1.52	55.27	1.48	53.99	1.48	53.51	1.47
1850.0	53.3	1.52	55.22	1.51	53.92	1.52	53.44	1.5
1900.0	53.3	1.52	55.16	1.55	53.85	1.55	53.37	1.54
1950.0	53.3	1.52	55.09	1.58	53.79	1.59	53.29	1.57
2000.0	53.3	1.52	55.03	1.62	53.72	1.63	53.22	1.61
2050.0	53.23	1.57	54.99	1.66	53.66	1.67	53.16	1.65
2100.0	53.17	1.62	54.95	1.7	53.59	1.71	53.09	1.69
2150.0	53.1	1.66	54.9	1.75	53.52	1.75	53.03	1.73
2200.0	53.03	1.71	54.83	1.8	53.46	1.8	52.96	1.77
2250.0	52.97	1.76	54.75	1.85	53.39	1.84	52.89	1.81
2300.0	52.9	1.81	54.66	1.9	53.32	1.88	52.82	1.85
2350.0	52.83	1.85	54.57	1.95	53.24	1.93	52.75	1.9
2400.0	52.77	1.9	54.49	2.0	53.17	1.98	52.69	1.94
2450.0	52.7	1.95	54.39	2.06	53.1	2.03	52.62	1.99
2500.0	52.64	2.02	54.3	2.11	53.02	2.08	52.55	2.04
2550.0	52.57	2.09	54.18	2.17	52.93	2.13	52.47	2.09
2600.0	52.51	2.16	54.05	2.22	52.84	2.18	52.38	2.14

2650.0	52.45	2.23	53.9	2.27	52.75	2.23	52.28	2.19
2700.0	52.38	2.3	53.73	2.33	52.66	2.28	52.18	2.24
2750.0	52.32	2.38	53.56	2.38	52.56	2.33	52.08	2.29
2800.0	52.25	2.45	53.4	2.44	52.47	2.38	51.97	2.34
2850.0	52.19	2.52	53.24	2.49	52.38	2.44	51.87	2.39
2900.0	52.13	2.59	53.1	2.55	52.28	2.49	51.76	2.44
2950.0	52.06	2.66	52.97	2.61	52.18	2.54	51.66	2.49
3000.0	52.0	2.73	52.83	2.66	52.08	2.59	51.55	2.55
3050.0	51.93	2.79	52.71	2.71	51.98	2.65	51.45	2.6
3100.0	51.86	2.85	52.58	2.76	51.88	2.7	51.34	2.65
3150.0	51.8	2.91	52.46	2.81	51.78	2.76	51.24	2.7
3200.0	51.73	2.96	52.34	2.86	51.69	2.81	51.13	2.75
3250.0	51.66	3.02	52.23	2.92	51.59	2.87	51.04	2.8
3300.0	51.59	3.08	52.13	2.97	51.5	2.92	50.94	2.86
3350.0	51.52	3.14	52.04	3.03	51.41	2.98	50.85	2.91
3400.0	51.46	3.2	51.95	3.08	51.33	3.04	50.76	2.96
3450.0	51.39	3.26	51.84	3.13	51.24	3.09	50.67	3.02
3500.0	51.32	3.31	51.75	3.19	51.15	3.15	50.58	3.07
3550.0	51.25	3.37	51.64	3.24	51.07	3.21	50.5	3.13
3600.0	51.19	3.43	51.54	3.29	50.99	3.27	50.41	3.18
3650.0	51.12	3.49	51.42	3.35	50.9	3.33	50.33	3.24
3700.0	51.05	3.55	51.31	3.41	50.82	3.39	50.25	3.3
3750.0	50.98	3.61	51.21	3.47	50.73	3.46	50.17	3.36
3800.0	50.91	3.66	51.12	3.53	50.65	3.52	50.09	3.42
3850.0	50.85	3.72	51.03	3.6	50.56	3.58	50.02	3.48
3900.0	50.78	3.78	50.95	3.66	50.48	3.65	49.94	3.54
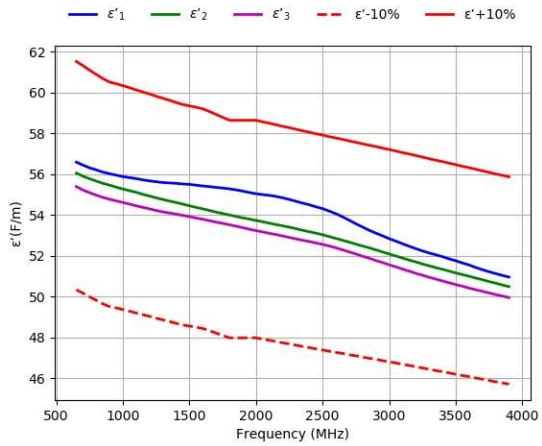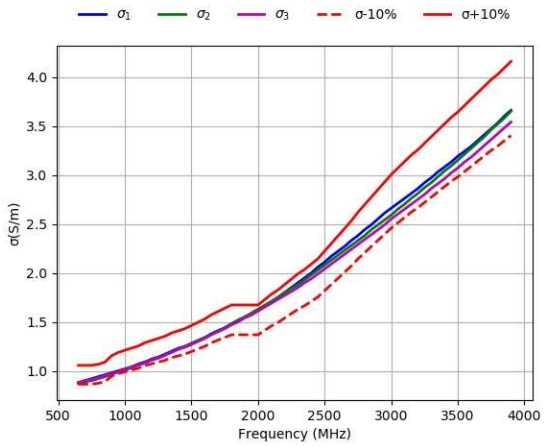
Permittivity	Conductivity