ELECTROMAGNETIC EMISSIONS COMPLIANCE REPORT

Applicant:	Wistron Neweb Corporation 20 Park Avenue II Hsinchu Science Park, Hsinchu 308, Taiwan
Manufacturer:	Wistron Neweb Corporation 20 Park Avenue II Hsinchu Science Park, Hsinchu 308, Taiwan
Product Name:	DRMR-H01
Brand Name:	WNC
Model No. / ISED HVIN:	DRMR-H01
ISED PMN:	DRMR-H01
Report Number:	TERF2501000193ER
FCC ID	NKR-DRMRH01
IC:	4441A-DRMRH01
Date of EUT Received:	January 10, 2025
Date of Test:	January 13, 2025~April 2, 2025
Issue Date:	June 2, 2025

Approved By _____
Blue Yang

We hereby certify that:

The above equipment was tested by SGS Taiwan Ltd. Central RF Lab The test data, data evaluation, test procedures, and equipment configurations shown in this report were made in accordance with the procedures given in ANSI ANSI C63.26-2015 and the energy emitted by the sample EUT comply with FCC rule part 2 , 22H & 24E & 27 C & 90S and ISED RSS-Gen, 130, 132, 133, 139, 140, 195, 199.

The results of this report relate only to the sample identified in this report.

Unless otherwise stated the results shown in this test report refer only to the sample(s) tested and such sample(s) are retained for 90 days only.
除非另有說明，此報告結果僅對測試之樣品負責，同時此樣品僅保留90天。本報告未經本公司書面許可，不可部份複製。
This document is issued by the Company subject to its General Conditions of Service printed overleaf, available on request or accessible at http://www.sgs.com.tw/Terms-and-Conditions and for electronic format documents, subject to Terms and Conditions for Electronic Documents at http://www.sgs.com.tw/Terms-and-Conditions. Attention is drawn to the limitation of liability, indemnification and jurisdiction issues defined therein. Any holder of this document is advised that information contained hereon reflects the Company's findings at the time of its intervention only and within the limits of Client's instructions, if any. The Company's sole responsibility is to its Client and this document does not exonerate parties to a transaction from exercising all their rights and obligations under the transaction documents. This document cannot be reproduced except in full, without prior written approval of the Company. Any unauthorized alteration, forgery or falsification of the content or appearance of this document is unlawful and offenders may be prosecuted to the fullest extent of the law.

Revision History

Report Number	Revision	Description	Issue Date	Revised By	Remark
TERF2501000193ER	00	Original	May 12, 2025	Karen Huang	
TERF2501000193ER	01	Update section 1.3	June 2, 2025	Karen Huang	*

Note:

1、 The remark "*" indicates modification of the report upon requests from certification body.

Unless otherwise stated the results shown in this test report refer only to the sample(s) tested and such sample(s) are retained for 90 days only.
除非另有說明，此報告結果僅對測試之樣品負責，同時此樣品僅保留90天。本報告未經本公司書面許可，不可部份複製。
This document is issued by the Company subject to its General Conditions of Service printed overleaf, available on request or accessible at http://www.sgs.com.tw/Terms-and-Conditions and for electronic format documents, subject to Terms and Conditions for Electronic Documents at http://www.sgs.com.tw/Terms-and-Conditions. Attention is drawn to the limitation of liability, indemnification and jurisdiction issues defined therein. Any holder of this document is advised that information contained hereon reflects the Company's findings at the time of its intervention only and within the limits of Client's instructions, if any. The Company's sole responsibility is to its Client and this document does not exonerate parties to a transaction from exercising all their rights and obligations under the transaction documents. This document cannot be reproduced except in full, without prior written approval of the Company. Any unauthorized alteration, forgery or falsification of the content or appearance of this document is unlawful and offenders may be prosecuted to the fullest extent of the law.

Contents

1 GENERAL PRODUCT INFORMATION 4
2 SYSTEM TEST CONFIGURATION 18
3 SUMMARY OF TEST RESULTS 22
4 DESCRIPTION OF TEST MODES 24
5 MEASUREMENT UNCERTAINTY 27
6 MEASUREMENT EQUIPMENT USED 28
7 STANDARD APPLICABLE 30
8 TEST SETUP 42
9 TEST PROCEDURE 45
10 MEASUREMENT RESULTS 48

Unless otherwise stated the results shown in this test report refer only to the sample(s) tested and such sample(s) are retained for 90 days only.
除非另有說明，此報告結果僅對測試之樣品負責，同時此樣品僅保留90天。本報告未經本公司書面許可，不可部份複製。
This document is issued by the Company subject to its General Conditions of Service printed overleaf, available on request or accessible at http://www.sgs.com.tw/Terms-and-Conditions and for electronic format documents, subject to Terms and Conditions for Electronic Documents at http://www.sgs.com.tw/Terms-and-Conditions. Attention is drawn to the limitation of liability, indemnification and jurisdiction issues defined therein. Any holder of this document is advised that information contained hereon reflects the Company's findings at the time of its intervention only and within the limits of Client's instructions, if any. The Company's sole responsibility is to its Client and this document does not exonerate parties to a transaction from exercising all their rights and obligations under the transaction documents. This document cannot be reproduced except in full, without prior written approval of the Company. Any unauthorized alteration, forgery or falsification of the content or appearance of this document is unlawful and offenders may be prosecuted to the fullest extent of the law.

1 GENERAL PRODUCT INFORMATION

1.1 Product Description

Product Name:	DRMR-H01
Brand Name:	WNC
Model No. / ISED HVIN:	DRMR-H01
Hardware Version:	N/A
Firmware Version:	N/A
EUT Series No.:	355182430001716, 355182430001690
Power Supply:	3.3 Vdc
Test Software (Name/Version)	Connect with Callbox

1.2 Operation Frequency Range

LTE Band 2			
BW (MHz)	Operation Frequency (MHz)		
1.4	1850.7	-	1909.3
3	1851.5	-	1908.5
5	1852.5	-	1907.5
10	1855.0	-	1905.0
15	1857.5	-	1902.5
20	1860.0	-	1900.0

LTE Band 4			
BW (MHz)	Operation Frequency (MHz)		
1.4	1710.7	-	1754.3
3	1711.5	-	1753.5
5	1712.5	-	1752.5
10	1715.0	-	1750.0
15	1717.5	-	1747.5
20	1720.0	-	1745.0

LTE Band 5			
BW (MHz)	Operation Frequency (MHz)		
1.4	824.7	-	848.3
3	825.5	-	847.5
5	826.5	-	846.5
10	829.0	-	844.0

LTE Band 7			
BW (MHz)	Operation Frequency (MHz)		
5	2502.5	-	2567.5
10	2505.0	-	2565.0
15	2507.5	-	2562.5
20	2510.0	-	2560.0

LTE Band 12			
BW (MHz)	Operation Frequency (MHz)		
1.4	699.7	-	715.3
3	700.5	-	714.5
5	701.5	-	713.5
10	704.0	-	711.0

Unless otherwise stated the results shown in this test report refer only to the sample(s) tested and such sample(s) are retained for 90 days only.
除非另有說明，此報告結果僅對測試之樣品負責，同時此樣品僅保留90天。本報告未經本公司書面許可，不可部份複製。
This document is issued by the Company subject to its General Conditions of Service printed overleaf, available on request or accessible at http://www.sgs.com.tw/Terms-and-Conditions and for electronic format documents, subject to Terms and Conditions for Electronic Documents at http://www.sgs.com.tw/Terms-and-Conditions. Attention is drawn to the limitation of liability, indemnification and jurisdiction issues defined therein. Any holder of this document is advised that information contained hereon reflects the Company's findings at the time of its intervention only and within the limits of Client's instructions, if any. The Company's sole responsibility is to its Client and this document does not exonerate parties to a transaction from exercising all their rights and obligations under the transaction documents. This document cannot be reproduced except in full, without prior written approval of the Company. Any unauthorized alteration, forgery or falsification of the content or appearance of this document is unlawful and offenders may be prosecuted to the fullest extent of the law.

LTE Band 13			
BW (MHz)	Operation Frequency (MHz)		
5	779.5	-	784.5
10	782.0		

LTE Band 14			
BW (MHz)	Operation Frequency (MHz)		
5	790.5	-	795.5
10	793.0		

LTE Band 17			
BW (MHz)	Operation Frequency (MHz)		
5	706.5	-	713.5
10	709.0	-	711.0

LTE Band 25			
BW (MHz)	Operation Frequency (MHz)		
1.4	1850.7	-	1914.3
3	1851.5	-	1913.5
5	1852.5	-	1912.5
10	1855.0	-	1910.0
15	1857.5	-	1907.5
20	1860.0	-	1905.0

LTE Band 26			
BW (MHz)	Operation Frequency (MHz)		
1.4	824.7	-	848.3
3	825.5	-	847.5
5	826.5	-	846.5
10	829.0	-	844.0
15	831.5	-	841.5

LTE Band 26 Part 90			
BW (MHz)	Operation Frequency (MHz)		
1.4	814.7	-	823.3
3	815.5	-	822.5
5	816.5	-	821.5
10	819.0		

LTE Band 30			
BW (MHz)	Operation Frequency (MHz)		
5	2307.5	-	2312.5
10	2310.0		

LTE Band 38			
BW (MHz)	Operation Frequency (MHz)		
5	2572.5	-	2617.5
10	2575.0	-	2615.0
15	2577.5	-	2612.5
20	2580.0	-	2610.0

LTE Band 41			
BW (MHz)	Operation Frequency (MHz)		
5	2498.5	-	2687.5
10	2501.0	-	2685.0
15	2503.5	-	2682.5
20	2506.0	-	2680.0

LTE Band 41 RSS-199			
BW (MHz)	Operation Frequency (MHz)		
5	2502.5	-	2687.5
10	2505.0	-	2685.0
15	2507.5	-	2682.5
20	2510.0	-	2680.0

LTE Band 66			
BW (MHz)	Operation Frequency (MHz)		
1.4	1710.7	-	1779.3
3	1711.5	-	1778.5
5	1712.5	-	1777.5
10	1715.0	-	1775.0
15	1717.5	-	1772.5
20	1720.0	-	1770.0

LTE Band 71			
BW (MHz)	Operation Frequency (MHz)		
5	665.5	-	695.5
10	668.0	-	693.0
15	670.5	-	690.5
20	673.0	-	688.0

Note: Operation in 814~824MHz is disabled in Canada

Unless otherwise stated the results shown in this test report refer only to the sample(s) tested and such sample(s) are retained for 90 days only.
除非另有說明，此報告結果僅對測試之樣品負責，同時此樣品僅保留90天。本報告未經本公司書面許可，不可部份複製。
This document is issued by the Company subject to its General Conditions of Service printed overleaf, available on request or accessible at http://www.sgs.com.tw/Terms-and-Conditions and for electronic format documents, subject to Terms and Conditions for Electronic Documents at http://www.sgs.com.tw/Terms-and-Conditions. Attention is drawn to the limitation of liability, indemnification and jurisdiction issues defined therein. Any holder of this document is advised that information contained hereon reflects the Company's findings at the time of its intervention only and within the limits of Client's instructions, if any. The Company's sole responsibility is to its Client and this document does not exonerate parties to a transaction from exercising all their rights and obligations under the transaction documents. This document cannot be reproduced except in full, without prior written approval of the Company. Any unauthorized alteration, forgery or falsification of the content or appearance of this document is unlawful and offenders may be prosecuted to the fullest extent of the law.

1.3 Antenna Designation

Antenna Type	Part No.	Antenna Model No.
PIFA	260-29161	PIFA#12
	260-29158	PIFA#9
	260-29152	PIFA#3
	260-29156	PIFA#7
	260-29159	PIFA#10
	260-29151	PIFA#2
	260-29150	PIFA#1
Monopole	260-29143	Monopole#3
	260-29144	Monopole#4
	260-29147	Monopole#7
	260-29148	Monopole#8
	260-29142	Monopole#2
	260-29146	Monopole#6
	260-29145	Monopole#5
Note: Transmission frequencies in this test report are only available by the above antenna(s).		

Unless otherwise stated the results shown in this test report refer only to the sample(s) tested and such sample(s) are retained for 90 days only.
除非另有說明，此報告結果僅對測試之樣品負責，同時此樣品僅保留90天。本報告未經本公司書面許可，不可部份複製。
This document is issued by the Company subject to its General Conditions of Service printed overleaf, available on request or accessible at http://www.sgs.com.tw/Terms-and-Conditions and for electronic format documents, subject to Terms and Conditions for Electronic Documents at http://www.sgs.com.tw/Terms-and-Conditions. Attention is drawn to the limitation of liability, indemnification and jurisdiction issues defined therein. Any holder of this document is advised that information contained hereon reflects the Company's findings at the time of its intervention only and within the limits of Client's instructions, if any. The Company's sole responsibility is to its Client and this document does not exonerate parties to a transaction from exercising all their rights and obligations under the transaction documents. This document cannot be reproduced except in full, without prior written approval of the Company. Any unauthorized alteration, forgery or falsification of the content or appearance of this document is unlawful and offenders may be prosecuted to the fullest extent of the law.

Bands	Freq. (MHz)	Peak Antenna Gain (dBi)			
		Gain	PIFA Ant. No.	Gain	Monopole Ant. No.
B2 / n2	1850~1910	3.60	12	3.45	3
B4	1710~1755	4.03	9	4.78	4
B5 / n5	824~849	2.88	3	3.42	3
B7 / n7	2500~2570	4.06	7	3.69	7
B12 / n12	698~716	3.08	3	2.82	8
B13	777~787	3.15	3	3.26	2
B14 / n14	788~798	2.94	3	3.32	2
B17	704~716	2.97	3	2.82	8
B25 / n25	1850~1915	3.60	12	3.45	3
B26 / n26	814~849	2.79	10	3.42	3
B30 / n30	2305~2315	1.00	2	1.00	6
B38 / n38	2570~2620	4.06	7	3.74	7
B41 / n41	2496~2690	3.33	1	3.76	7
B66 / n66	1710~1780	4.03	9	4.86	4
B71 / n71	663~698	3.30	3	3.30	5

Note: Antenna information is provided by the applicant.

Unless otherwise stated the results shown in this test report refer only to the sample(s) tested and such sample(s) are retained for 90 days only.
除非另有說明，此報告結果僅對測試之樣品負責，同時此樣品僅保留90天。本報告未經本公司書面許可，不可部份複製。
This document is issued by the Company subject to its General Conditions of Service printed overleaf, available on request or accessible at http://www.sgs.com.tw/Terms-and-Conditions and for electronic format documents, subject to Terms and Conditions for Electronic Documents at http://www.sgs.com.tw/Terms-and-Conditions. Attention is drawn to the limitation of liability, indemnification and jurisdiction issues defined therein. Any holder of this document is advised that information contained hereon reflects the Company's findings at the time of its intervention only and within the limits of Client's instructions, if any. The Company's sole responsibility is to its Client and this document does not exonerate parties to a transaction from exercising all their rights and obligations under the transaction documents. This document cannot be reproduced except in full, without prior written approval of the Company. Any unauthorized alteration, forgery or falsification of the content or appearance of this document is unlawful and offenders may be prosecuted to the fullest extent of the law.

1.4 Type of Emission & Max ERP/EIRP Power Measurement Result:

LTE Band	BW	Frequency		Modulation	ERP / EIRP (dBm)		(W)	99%	Type of Emission
2	1.4	1850.7	1909.3	QPSK	26.54	EIRP	0.451	1.0886	1M09G7D
				16QAM	25.80	EIRP	0.380	1.0936	1M09D7W
				64QAM	24.63	EIRP	0.290	1.0889	1M09D7W
				256QAM	21.75	EIRP	**0.150**	1.0819	1M08D7W
2	3	1851.5	1908.5	QPSK	26.47	EIRP	0.444	2.6845	2M68G7D
				16QAM	25.83	EIRP	0.383	2.6931	2M69D7W
				64QAM	24.70	EIRP	0.295	2.6905	2M69D7W
				256QAM	21.72	EIRP	0.149	2.6880	2M69D7W
2	5	1852.5	1907.5	QPSK	26.59	EIRP	**0.456**	4.4838	4M48G7D
				16QAM	25.86	EIRP	**0.385**	4.4773	4M48D7W
				64QAM	24.72	EIRP	**0.296**	4.4893	4M49D7W
				256QAM	21.74	EIRP	0.149	4.4791	4M48D7W
2	10	1855.0	1905.0	QPSK	26.52	EIRP	0.449	8.9658	8M97G7D
				16QAM	25.72	EIRP	0.373	8.9491	8M95D7W
				64QAM	24.70	EIRP	0.295	8.9793	8M98D7W
				256QAM	21.73	EIRP	0.149	8.9694	8M97D7W
2	15	1857.5	1902.5	QPSK	26.47	EIRP	0.444	13.473	13M5G7D
				16QAM	25.84	EIRP	0.384	13.442	13M4D7W
				64QAM	24.62	EIRP	0.290	13.455	13M5D7W
				256QAM	21.72	EIRP	0.149	13.435	13M4D7W
2	20	1860.0	1900.0	QPSK	26.45	EIRP	0.442	17.891	17M9G7D
				16QAM	25.80	EIRP	0.380	17.891	17M9D7W
				64QAM	24.57	EIRP	0.286	17.904	17M9D7W
				256QAM	21.69	EIRP	0.148	17.911	17M9D7W

Unless otherwise stated the results shown in this test report refer only to the sample(s) tested and such sample(s) are retained for 90 days only.
除非另有說明，此報告結果僅對測試之樣品負責，同時此樣品僅保留90天。本報告未經本公司書面許可，不可部份複製。
This document is issued by the Company subject to its General Conditions of Service printed overleaf, available on request or accessible at http://www.sgs.com.tw/Terms-and-Conditions and for electronic format documents, subject to Terms and Conditions for Electronic Documents at http://www.sgs.com.tw/Terms-and-Conditions. Attention is drawn to the limitation of liability, indemnification and jurisdiction issues defined therein. Any holder of this document is advised that information contained hereon reflects the Company's findings at the time of its intervention only and within the limits of Client's instructions, if any. The Company's sole responsibility is to its Client and this document does not exonerate parties to a transaction from exercising all their rights and obligations under the transaction documents. This document cannot be reproduced except in full, without prior written approval of the Company. Any unauthorized alteration, forgery or falsification of the content or appearance of this document is unlawful and offenders may be prosecuted to the fullest extent of the law.

LTE Band	BW	Frequency		Modulation	ERP / EIRP (dBm)		(W)	99%	Type of Emission
4	1.4	1710.7	1754.3	QPSK	27.76	EIRP	0.597	1.0871	1M09G7D
				16QAM	27.09	EIRP	0.512	1.0923	1M09D7W
				64QAM	25.83	EIRP	0.383	1.0867	1M09D7W
				256QAM	22.93	EIRP	0.196	1.0809	1M08D7W
4	3	1711.5	1753.5	QPSK	27.77	EIRP	0.598	2.6859	2M69G7D
				16QAM	27.11	EIRP	**0.514**	2.6903	2M69D7W
				64QAM	25.86	EIRP	0.385	2.6880	2M69D7W
				256QAM	23.00	EIRP	**0.200**	2.6877	2M69D7W
4	5	1712.5	1752.5	QPSK	27.81	EIRP	**0.604**	4.4789	4M48G7D
				16QAM	27.10	EIRP	0.513	4.4747	4M47D7W
				64QAM	25.96	EIRP	**0.394**	4.4866	4M49D7W
				256QAM	22.98	EIRP	0.199	4.4808	4M48D7W
4	10	1715.0	1750.0	QPSK	27.75	EIRP	0.596	8.9750	8M98G7D
				16QAM	27.07	EIRP	0.509	8.9454	8M95D7W
				64QAM	25.89	EIRP	0.388	8.9830	8M98D7W
				256QAM	22.94	EIRP	0.197	8.9650	8M97D7W
4	15	1717.5	1747.5	QPSK	27.68	EIRP	0.586	13.4750	13M5G7D
				16QAM	26.96	EIRP	0.497	13.4480	13M4D7W
				64QAM	25.83	EIRP	0.383	13.4440	13M4D7W
				256QAM	22.90	EIRP	0.195	13.4300	13M4D7W
4	20	1720.0	1745.0	QPSK	27.66	EIRP	0.583	17.8980	17M9G7D
				16QAM	26.89	EIRP	0.489	17.8720	17M9D7W
				64QAM	25.77	EIRP	0.378	17.8920	17M9D7W
				256QAM	22.93	EIRP	0.196	17.8870	17M9D7W
LTE Band	BW	Frequency		Modulation	ERP / EIRP (dBm)		(W)	99%	Type of Emission
5	1.4	824.7	848.3	QPSK	23.83	ERP	0.242	1.0875	1M09G7D
				16QAM	23.18	ERP	**0.208**	1.0931	1M09D7W
				64QAM	21.91	ERP	**0.155**	1.0869	1M09D7W
				256QAM	19.18	ERP	0.083	1.0808	1M08D7W
5	3	825.5	847.5	QPSK	23.78	ERP	0.239	2.6808	2M68G7D
				16QAM	23.07	ERP	0.203	2.6915	2M69D7W
				64QAM	21.88	ERP	0.154	2.6871	2M69D7W
				256QAM	19.22	ERP	**0.084**	2.6867	2M69D7W
5	5	826.5	846.5	QPSK	23.91	ERP	**0.246**	4.4805	4M48G7D
				16QAM	23.06	ERP	0.202	4.4742	4M47D7W
				64QAM	21.91	ERP	**0.155**	4.4876	4M49D7W
				256QAM	19.21	ERP	0.083	4.4794	4M48D7W
5	10	829.0	844.0	QPSK	23.81	ERP	0.240	8.9795	8M98G7D
				16QAM	22.97	ERP	0.198	8.9459	8M95D7W
				64QAM	21.85	ERP	0.153	8.9852	8M99D7W
				256QAM	19.18	ERP	0.083	8.9678	8M97D7W

Unless otherwise stated the results shown in this test report refer only to the sample(s) tested and such sample(s) are retained for 90 days only.
除非另有說明，此報告結果僅對測試之樣品負責，同時此樣品僅保留90天。本報告未經本公司書面許可，不可部份複製。
This document is issued by the Company subject to its General Conditions of Service printed overleaf, available on request or accessible at http://www.sgs.com.tw/Terms-and-Conditions and for electronic format documents, subject to Terms and Conditions for Electronic Documents at http://www.sgs.com.tw/Terms-and-Conditions. Attention is drawn to the limitation of liability, indemnification and jurisdiction issues defined therein. Any holder of this document is advised that information contained hereon reflects the Company's findings at the time of its intervention only and within the limits of Client's instructions, if any. The Company's sole responsibility is to its Client and this document does not exonerate parties to a transaction from exercising all their rights and obligations under the transaction documents. This document cannot be reproduced except in full, without prior written approval of the Company. Any unauthorized alteration, forgery or falsification of the content or appearance of this document is unlawful and offenders may be prosecuted to the fullest extent of the law.

LTE Band	BW	Frequency		Modulation	ERP / EIRP (dBm)		(W)	99%	Type of Emission
7	5	2502.5	2567.5	QPSK	27.00	EIRP	**0.501**	4.4833	4M48G7D
				16QAM	26.18	EIRP	**0.415**	4.4804	4M48D7W
				64QAM	25.08	EIRP	**0.322**	4.4852	4M49D7W
				256QAM	22.16	EIRP	**0.164**	4.4803	4M48D7W
7	10	2505.0	2565.0	QPSK	26.97	EIRP	0.498	8.9807	8M98G7D
				16QAM	26.01	EIRP	0.399	8.9488	8M95D7W
				64QAM	25.08	EIRP	**0.322**	8.9800	8M98D7W
				256QAM	22.13	EIRP	0.163	8.9646	8M96D7W
7	15	2507.5	2562.5	QPSK	26.86	EIRP	0.485	13.4740	13M5G7D
				16QAM	26.03	EIRP	0.401	13.4400	13M4D7W
				64QAM	24.82	EIRP	0.303	13.4530	13M5D7W
				256QAM	22.09	EIRP	0.162	13.4340	13M4D7W
7	20	2510.0	2560.0	QPSK	26.82	EIRP	0.481	17.9000	17M9G7D
				16QAM	26.03	EIRP	0.401	17.8930	17M9D7W
				64QAM	24.92	EIRP	0.310	17.9140	17M9D7W
				256QAM	22.07	EIRP	0.161	17.8960	17M9D7W

LTE Band	BW	Frequency		Modulation	ERP / EIRP (dBm)		(W)	99%	Type of Emission
12	1.4	699.7	715.3	QPSK	23.49	ERP	0.223	1.0877	1M09G7D
				16QAM	22.80	ERP	0.191	1.0946	1M09D7W
				64QAM	21.61	ERP	0.145	1.0875	1M09D7W
				256QAM	18.83	ERP	0.076	1.0804	1M08D7W
12	3	700.5	714.5	QPSK	23.43	ERP	0.220	2.6814	2M68G7D
				16QAM	22.84	ERP	**0.192**	2.6932	2M69D7W
				64QAM	21.59	ERP	0.144	2.6870	2M69D7W
				256QAM	18.83	ERP	0.076	2.6861	2M69D7W
12	5	701.5	713.5	QPSK	23.61	ERP	0.230	4.4779	4M48G7D
				16QAM	22.60	ERP	0.182	4.4737	4M47D7W
				64QAM	21.63	ERP	0.146	4.4868	4M49D7W
				256QAM	18.84	ERP	**0.077**	4.4785	4M48D7W
12	10	704.0	711.0	QPSK	23.68	ERP	**0.233**	8.9743	8M97G7D
				16QAM	22.70	ERP	0.186	8.9404	8M94D7W
				64QAM	21.74	ERP	**0.149**	8.9825	8M98D7W
				256QAM	18.82	ERP	0.076	8.9679	8M97D7W

Unless otherwise stated the results shown in this test report refer only to the sample(s) tested and such sample(s) are retained for 90 days only.
除非另有說明，此報告結果僅對測試之樣品負責，同時此樣品僅保留90天。本報告未經本公司書面許可，不可部份複製。
This document is issued by the Company subject to its General Conditions of Service printed overleaf, available on request or accessible at http://www.sgs.com.tw/Terms-and-Conditions and for electronic format documents, subject to Terms and Conditions for Electronic Documents at http://www.sgs.com.tw/Terms-and-Conditions. Attention is drawn to the limitation of liability, indemnification and jurisdiction issues defined therein. Any holder of this document is advised that information contained hereon reflects the Company's findings at the time of its intervention only and within the limits of Client's instructions, if any. The Company's sole responsibility is to its Client and this document does not exonerate parties to a transaction from exercising all their rights and obligations under the transaction documents. This document cannot be reproduced except in full, without prior written approval of the Company. Any unauthorized alteration, forgery or falsification of the content or appearance of this document is unlawful and offenders may be prosecuted to the fullest extent of the law.

LTE Band	BW	Frequency		Modulation	ERP / EIRP (dBm)		(W)	99%	Type of Emission
13	5	779.5	784.5	QPSK	23.47	ERP	0.222	4.4796	4M48G7D
				16QAM	22.80	ERP	**0.191**	4.4754	4M48D7W
				64QAM	21.65	ERP	**0.146**	4.4907	4M49D7W
				256QAM	18.84	ERP	**0.077**	4.4810	4M48D7W
13	10	782.0	782.0	QPSK	23.49	ERP	**0.223**	8.9761	8M98G7D
				16QAM	22.67	ERP	0.185	8.9265	8M93D7W
				64QAM	21.60	ERP	0.145	8.9760	8M98D7W
				256QAM	18.79	ERP	0.076	8.9472	8M95D7W
LTE Band	BW	Frequency		Modulation	ERP / EIRP (dBm)		(W)	99%	Type of Emission
14	5	790.5	795.5	QPSK	23.70	ERP	**0.234**	4.4812	4M48G7D
				16QAM	22.94	ERP	0.197	4.4724	4M47D7W
				64QAM	21.74	ERP	0.149	4.4994	4M50D7W
				256QAM	18.92	ERP	0.078	4.4829	4M48D7W
14	10	793.0	793.0	QPSK	23.68	ERP	0.233	8.9745	8M97G7D
				16QAM	22.98	ERP	**0.199**	8.9424	8M94D7W
				64QAM	21.79	ERP	**0.151**	8.9698	8M97D7W
				256QAM	18.95	ERP	**0.079**	8.9674	8M97D7W
LTE Band	BW	Frequency		Modulation	ERP / EIRP (dBm)		(W)	99%	Type of Emission
17	5	706.5	713.5	QPSK	23.59	ERP	**0.229**	4.4796	4M48G7D
				16QAM	22.77	ERP	0.189	4.4735	4M47D7W
				64QAM	21.66	ERP	**0.147**	4.4858	4M49D7W
				256QAM	18.84	ERP	**0.077**	4.4805	4M48D7W
17	10	709.0	711.0	QPSK	23.57	ERP	0.228	8.9779	8M98G7D
				16QAM	22.81	ERP	**0.191**	8.9407	8M94D7W
				64QAM	21.61	ERP	0.145	8.9763	8M98D7W
				256QAM	18.77	ERP	0.075	8.9580	8M96D7W

Unless otherwise stated the results shown in this test report refer only to the sample(s) tested and such sample(s) are retained for 90 days only.
除非另有說明，此報告結果僅對測試之樣品負責，同時此樣品僅保留90天。本報告未經本公司書面許可，不可部份複製。
This document is issued by the Company subject to its General Conditions of Service printed overleaf, available on request or accessible at http://www.sgs.com.tw/Terms-and-Conditions and for electronic format documents, subject to Terms and Conditions for Electronic Documents at http://www.sgs.com.tw/Terms-and-Conditions. Attention is drawn to the limitation of liability, indemnification and jurisdiction issues defined therein. Any holder of this document is advised that information contained hereon reflects the Company's findings at the time of its intervention only and within the limits of Client's instructions, if any. The Company's sole responsibility is to its Client and this document does not exonerate parties to a transaction from exercising all their rights and obligations under the transaction documents. This document cannot be reproduced except in full, without prior written approval of the Company. Any unauthorized alteration, forgery or falsification of the content or appearance of this document is unlawful and offenders may be prosecuted to the fullest extent of the law.

LTE Band	BW	Frequency		Modulation	ERP / EIRP (dBm)		(W)	99%	Type of Emission
25	1.4	1850.7	1914.3	QPSK	26.37	EIRP	0.434	1.0869	1M09G7D
				16QAM	25.70	EIRP	0.372	1.0950	1M10D7W
				64QAM	24.45	EIRP	0.279	1.0885	1M09D7W
				256QAM	21.63	EIRP	0.146	1.0827	1M08D7W
25	3	1851.5	1913.5	QPSK	26.34	EIRP	0.431	2.6854	2M69G7D
				16QAM	25.66	EIRP	0.368	2.6949	2M69D7W
				64QAM	24.49	EIRP	**0.281**	2.6907	2M69D7W
				256QAM	21.61	EIRP	0.145	2.6845	2M68D7W
25	5	1852.5	1912.5	QPSK	26.38	EIRP	**0.435**	4.4819	4M48G7D
				16QAM	25.72	EIRP	**0.373**	4.4782	4M48D7W
				64QAM	24.49	EIRP	**0.281**	4.4867	4M49D7W
				256QAM	21.55	EIRP	0.143	4.4849	4M48D7W
25	10	1855.0	1910.0	QPSK	26.35	EIRP	0.432	8.9840	8M98G7D
				16QAM	25.67	EIRP	0.369	8.9481	8M95D7W
				64QAM	24.42	EIRP	0.277	8.9804	8M98D7W
				256QAM	21.64	EIRP	**0.146**	8.9560	8M96D7W
25	15	1857.5	1907.5	QPSK	26.31	EIRP	0.428	13.4470	13M4G7D
				16QAM	25.64	EIRP	0.366	13.4360	13M4D7W
				64QAM	24.47	EIRP	0.280	13.4410	13M4D7W
				256QAM	21.54	EIRP	0.143	13.4200	13M4D7W
25	20	1860.0	1905.0	QPSK	26.32	EIRP	0.429	17.8890	17M9G7D
				16QAM	25.64	EIRP	0.366	17.8640	17M9D7W
				64QAM	24.45	EIRP	0.279	17.8670	17M9D7W
				256QAM	21.61	EIRP	0.145	17.8640	17M9D7W

LTE Band	BW	Frequency		Modulation	ERP / EIRP (dBm)		(W)	99%	Type of Emission
26 Part 90	1.4	814.7	823.3	QPSK	24.01	ERP	0.252	1.0872	1M09G7D
				16QAM	23.21	ERP	0.209	1.0944	1M09D7W
				64QAM	22.00	ERP	0.158	1.0870	1M09D7W
				256QAM	19.28	ERP	**0.085**	1.0811	1M08D7W
26 Part 90	3	815.5	822.5	QPSK	24.00	ERP	0.251	2.6799	2M68G7D
				16QAM	23.11	ERP	0.205	2.6920	2M69D7W
				64QAM	22.09	ERP	0.162	2.6874	2M69D7W
				256QAM	19.22	ERP	0.084	2.6861	2M69D7W
26 Part 90	5	816.5	821.5	QPSK	24.02	ERP	**0.252**	4.4760	4M48G7D
				16QAM	23.18	ERP	0.208	4.4712	4M47D7W
				64QAM	22.13	ERP	**0.163**	4.4841	4M48D7W
				256QAM	19.22	ERP	0.084	4.4843	4M48D7W
26 Part 90	10	819.0	819.0	QPSK	23.97	ERP	0.249	8.9665	8M97G7D
				16QAM	23.22	ERP	**0.210**	8.9260	8M93D7W
				64QAM	22.08	ERP	0.161	8.9546	8M95D7W
				256QAM	19.15	ERP	0.082	8.9469	8M95D7W

Unless otherwise stated the results shown in this test report refer only to the sample(s) tested and such sample(s) are retained for 90 days only.
除非另有說明，此報告結果僅對測試之樣品負責，同時此樣品僅保留90天。本報告未經本公司書面許可，不可部份複製。
This document is issued by the Company subject to its General Conditions of Service printed overleaf, available on request or accessible at http://www.sgs.com.tw/Terms-and-Conditions and for electronic format documents, subject to Terms and Conditions for Electronic Documents at http://www.sgs.com.tw/Terms-and-Conditions. Attention is drawn to the limitation of liability, indemnification and jurisdiction issues defined therein. Any holder of this document is advised that information contained hereon reflects the Company's findings at the time of its intervention only and within the limits of Client's instructions, if any. The Company's sole responsibility is to its Client and this document does not exonerate parties to a transaction from exercising all their rights and obligations under the transaction documents. This document cannot be reproduced except in full, without prior written approval of the Company. Any unauthorized alteration, forgery or falsification of the content or appearance of this document is unlawful and offenders may be prosecuted to the fullest extent of the law.

LTE Band	BW	Frequency		Modulation	ERP / EIRP (dBm)		(W)	99%	Type of Emission
26	1.4	824.7	848.3	QPSK	24.04	ERP	0.254	1.0875	1M09G7D
				16QAM	23.23	ERP	**0.210**	1.0939	1M09D7W
				64QAM	22.10	ERP	0.162	1.0866	1M09D7W
				256QAM	19.24	ERP	0.084	1.0799	1M08D7W
26	3	825.5	847.5	QPSK	24.01	ERP	0.252	2.6798	2M68G7D
				16QAM	23.01	ERP	0.200	2.6924	2M69D7W
				64QAM	22.11	ERP	0.163	2.6877	2M69D7W
				256QAM	19.27	ERP	0.085	2.6867	2M69D7W
26	5	826.5	846.5	QPSK	24.11	ERP	**0.258**	4.4796	4M48G7D
				16QAM	23.14	ERP	0.206	4.4732	4M47D7W
				64QAM	22.14	ERP	**0.164**	4.4884	4M49D7W
				256QAM	19.32	ERP	**0.086**	4.4787	4M48D7W
26	10	829.0	844.0	QPSK	24.09	ERP	0.256	8.9726	8M97G7D
				16QAM	23.09	ERP	0.204	8.9416	8M94D7W
				64QAM	22.04	ERP	0.160	8.9836	8M98D7W
				256QAM	19.30	ERP	0.085	8.9703	8M97D7W
26	15	831.5	841.5	QPSK	23.95	ERP	0.248	13.4600	13M5G7D
				16QAM	23.23	ERP	**0.210**	13.4350	13M4D7W
				64QAM	22.07	ERP	0.161	13.4430	13M4D7W
				256QAM	19.28	ERP	0.085	13.4390	13M4D7W

LTE Band	BW	Frequency		Modulation	ERP / EIRP (dBm/5MHz)		(W)	99%	Type of Emission
30	5	2307.5	2312.5	QPSK	22.95	EIRP	**0.197**	4.4852	4M49G7D
				16QAM	22.32	EIRP	**0.171**	4.4728	4M47D7W
				64QAM	21.03	EIRP	**0.127**	4.4864	4M49D7W
				256QAM	18.11	EIRP	**0.065**	4.4804	4M48D7W
30	10	2310.0	2310.0	QPSK	22.88	EIRP	0.194	8.9700	8M97G7D
				16QAM	22.14	EIRP	0.164	8.9304	8M93D7W
				64QAM	20.99	EIRP	0.126	8.9703	8M97D7W
				256QAM	18.05	EIRP	0.064	8.9428	8M94D7W

Unless otherwise stated the results shown in this test report refer only to the sample(s) tested and such sample(s) are retained for 90 days only.
除非另有說明，此報告結果僅對測試之樣品負責，同時此樣品僅保留90天。本報告未經本公司書面許可，不可部份複製。
This document is issued by the Company subject to its General Conditions of Service printed overleaf, available on request or accessible at http://www.sgs.com.tw/Terms-and-Conditions and for electronic format documents, subject to Terms and Conditions for Electronic Documents at http://www.sgs.com.tw/Terms-and-Conditions. Attention is drawn to the limitation of liability, indemnification and jurisdiction issues defined therein. Any holder of this document is advised that information contained hereon reflects the Company's findings at the time of its intervention only and within the limits of Client's instructions, if any. The Company's sole responsibility is to its Client and this document does not exonerate parties to a transaction from exercising all their rights and obligations under the transaction documents. This document cannot be reproduced except in full, without prior written approval of the Company. Any unauthorized alteration, forgery or falsification of the content or appearance of this document is unlawful and offenders may be prosecuted to the fullest extent of the law.

LTE Band	BW	Frequency		Modulation	ERP / EIRP (dBm)		(W)	99%	Type of Emission
38	5	2572.5	2617.5	QPSK	27.11	EIRP	**0.514**	4.4809	4M48G7D
				16QAM	26.27	EIRP	**0.424**	4.4866	4M49D7W
				64QAM	24.99	EIRP	0.316	4.4935	4M49D7W
				256QAM	22.24	EIRP	**0.167**	4.4684	4M47D7W
38	10	2575.0	2615.0	QPSK	27.11	EIRP	**0.514**	8.9697	8M97G7D
				16QAM	26.26	EIRP	0.423	8.9625	8M96D7W
				64QAM	25.02	EIRP	**0.318**	8.9768	8M98D7W
				256QAM	22.21	EIRP	0.166	8.9611	8M96D7W
38	15	2577.5	2612.5	QPSK	26.97	EIRP	0.498	13.4670	13M5G7D
				16QAM	26.18	EIRP	0.415	13.4570	13M5D7W
				64QAM	24.86	EIRP	0.306	13.4630	13M5D7W
				256QAM	22.09	EIRP	0.162	13.4520	13M5D7W
38	20	2580.0	2610.0	QPSK	27.06	EIRP	0.508	17.9110	17M9G7D
				16QAM	26.21	EIRP	0.418	17.8950	17M9D7W
				64QAM	24.92	EIRP	0.310	17.9020	17M9D7W
				256QAM	22.15	EIRP	0.164	17.8980	17M9D7W

LTE Band	BW	Frequency		Modulation	ERP / EIRP (dBm)		(W)	99%	Type of Emission
41	5	2498.5	2687.5	QPSK	29.83	EIRP	**0.962**	4.4875	4M49G7D
				16QAM	28.83	EIRP	0.764	4.4875	4M49D7W
				64QAM	27.72	EIRP	**0.592**	4.4934	4M49D7W
				256QAM	24.77	EIRP	0.300	4.4731	4M47D7W
41	10	2501.0	2685.0	QPSK	29.78	EIRP	0.951	8.9738	8M97G7D
				16QAM	28.87	EIRP	0.771	8.9509	8M95D7W
				64QAM	27.72	EIRP	**0.592**	8.9822	8M98D7W
				256QAM	24.73	EIRP	0.297	8.9585	8M96D7W
41	15	2503.5	2682.0	QPSK	29.60	EIRP	0.912	13.4520	13M5G7D
				16QAM	28.92	EIRP	**0.780**	13.4590	13M5D7W
				64QAM	27.65	EIRP	0.582	13.4620	13M5D7W
				256QAM	24.70	EIRP	0.295	13.4470	13M4D7W
41	20	2506.0	2680.0	QPSK	29.71	EIRP	0.935	17.9200	17M9G7D
				16QAM	28.80	EIRP	0.759	17.8820	17M9D7W
				64QAM	27.61	EIRP	0.577	17.8910	17M9D7W
				256QAM	28.47	EIRP	**0.703**	17.8870	17M9D7W

Unless otherwise stated the results shown in this test report refer only to the sample(s) tested and such sample(s) are retained for 90 days only.
除非另有說明，此報告結果僅對測試之樣品負責，同時此樣品僅保留90天。本報告未經本公司書面許可，不可部份複製。
This document is issued by the Company subject to its General Conditions of Service printed overleaf, available on request or accessible at http://www.sgs.com.tw/Terms-and-Conditions and for electronic format documents, subject to Terms and Conditions for Electronic Documents at http://www.sgs.com.tw/Terms-and-Conditions. Attention is drawn to the limitation of liability, indemnification and jurisdiction issues defined therein. Any holder of this document is advised that information contained hereon reflects the Company's findings at the time of its intervention only and within the limits of Client's instructions, if any. The Company's sole responsibility is to its Client and this document does not exonerate parties to a transaction from exercising all their rights and obligations under the transaction documents. This document cannot be reproduced except in full, without prior written approval of the Company. Any unauthorized alteration, forgery or falsification of the content or appearance of this document is unlawful and offenders may be prosecuted to the fullest extent of the law.

LTE Band	BW	Frequency		Modulation	ERP / EIRP (dBm)		(W)	99%	Type of Emission
66	1.4	1710.7	1779.3	QPSK	27.85	EIRP	0.610	1.0872	1M09G7D
				16QAM	27.19	EIRP	**0.524**	1.0942	1M09D7W
				64QAM	25.98	EIRP	0.396	1.0873	1M09D7W
				256QAM	23.07	EIRP	0.203	1.0802	1M08D7W
66	3	1711.5	1778.5	QPSK	27.84	EIRP	0.608	2.6823	2M68G7D
				16QAM	27.16	EIRP	0.520	2.6919	2M69D7W
				64QAM	25.96	EIRP	0.394	2.6891	2M69D7W
				256QAM	23.06	EIRP	0.202	2.6873	2M69D7W
66	5	1712.5	1777.5	QPSK	27.87	EIRP	**0.612**	4.4802	4M48G7D
				16QAM	27.18	EIRP	0.522	4.4748	4M47D7W
				64QAM	25.95	EIRP	0.394	4.4860	4M49D7W
				256QAM	23.10	EIRP	**0.204**	4.4822	4M48D7W
66	10	1715.0	1775.0	QPSK	27.83	EIRP	0.607	8.9752	8M98G7D
				16QAM	27.16	EIRP	0.520	8.9474	8M95D7W
				64QAM	25.95	EIRP	0.394	8.9855	8M99D7W
				256QAM	23.08	EIRP	0.203	8.9653	8M97D7W
66	15	1717.5	1772.5	QPSK	27.78	EIRP	0.600	13.4720	13M5G7D
				16QAM	27.15	EIRP	0.519	13.4380	13M4D7W
				64QAM	25.94	EIRP	0.393	13.4390	13M4D7W
				256QAM	23.00	EIRP	0.200	13.4320	13M4D7W
66	20	1720.0	1770.0	QPSK	27.78	EIRP	0.600	17.8850	17M9G7D
				16QAM	27.06	EIRP	0.508	17.8850	17M9D7W
				64QAM	25.99	EIRP	**0.397**	17.8860	17M9D7W
				256QAM	23.02	EIRP	0.200	17.8880	17M9D7W
LTE Band	BW	Frequency		Modulation	ERP / EIRP (dBm)		(W)	99%	Type of Emission
71	5	665.5	695.5	QPSK	23.95	ERP	**0.248**	4.4784	4M48G7D
				16QAM	22.99	ERP	0.199	4.4737	4M47D7W
				64QAM	22.03	ERP	0.160	4.4863	4M49D7W
				256QAM	19.16	ERP	0.082	4.4779	4M48D7W
71	10	668.0	693.0	QPSK	23.88	ERP	0.244	8.9713	8M97G7D
				16QAM	23.00	ERP	0.200	8.9391	8M94D7W
				64QAM	22.01	ERP	0.159	8.9741	8M97D7W
				256QAM	19.18	ERP	**0.083**	8.9638	8M96D7W
71	15	670.5	690.5	QPSK	23.83	ERP	0.242	13.4670	13M5G7D
				16QAM	23.05	ERP	**0.202**	13.4290	13M4D7W
				64QAM	21.96	ERP	0.157	13.4410	13M4D7W
				256QAM	19.14	ERP	0.082	13.4280	13M4D7W
71	20	673.0	688.0	QPSK	23.81	ERP	0.240	17.8880	17M9G7D
				16QAM	22.98	ERP	0.199	17.8700	17M9D7W
				64QAM	22.05	ERP	**0.160**	17.8750	17M9D7W
				256QAM	19.10	ERP	0.081	17.8820	17M9D7W

Unless otherwise stated the results shown in this test report refer only to the sample(s) tested and such sample(s) are retained for 90 days only.
除非另有說明，此報告結果僅對測試之樣品負責，同時此樣品僅保留90天。本報告未經本公司書面許可，不可部份複製。
This document is issued by the Company subject to its General Conditions of Service printed overleaf, available on request or accessible at http://www.sgs.com.tw/Terms-and-Conditions and for electronic format documents, subject to Terms and Conditions for Electronic Documents at http://www.sgs.com.tw/Terms-and-Conditions. Attention is drawn to the limitation of liability, indemnification and jurisdiction issues defined therein. Any holder of this document is advised that information contained hereon reflects the Company's findings at the time of its intervention only and within the limits of Client's instructions, if any. The Company's sole responsibility is to its Client and this document does not exonerate parties to a transaction from exercising all their rights and obligations under the transaction documents. This document cannot be reproduced except in full, without prior written approval of the Company. Any unauthorized alteration, forgery or falsification of the content or appearance of this document is unlawful and offenders may be prosecuted to the fullest extent of the law.

1.5 Test Methodology of Applied Standards

FCC 47 CFR Part 2, 22H, 24E, 27C, Part 90.
ISED RSS-GEN Issue 5 Amendment 2 Feb. 2021
ISED RSS-130 Issue 2 Feb. 2019
ISED RSS-132 Issue 4 Jan. 2023
ISED RSS-133 Issue 7 July 2024
ISED RSS-139 Issue 4 Amendment Oct. 2022
ISED RSS-140 Issue 1 Apr. 2018
ISED RSS-195 Issue 2 Apr. 24, 2014
ISED RSS-199 Issue 4 July 2023
ANSI C63.26-2015
KDB971168 D01 Power Meas license Digital System v03r01
KDB412172 D01 Determining ERP and EIRP v01r01

1.6 Test Facility

Laboratory	Test Site Address	Test Site Name	FCC Designation number	IC CAB identifier
SGS Taiwan Ltd. Central RF Lab. (TAF code 3702)	No.134, Wu Kung Road, New Taipei Industrial Park, Wuku District, New Taipei City, Taiwan.	SAC 1	TW0027	TW3702
		SAC 2		
		SAC 3		
		Conduction 1		
		Conducted 1		
		Conducted 2		
		Conducted 3		
		Conducted 4		
		Conducted 5		
		Conducted 6		
	No.2, Keji 1st Rd., Guishan District, Taoyuan City, Taiwan 333	Conduction C	TW0028	
		SAC C		
		SAC D		
		SAC G		
		Conducted A		
		Conducted B		
		Conducted C		
		Conducted D		
		Conducted E		
		Conducted F		
		Conducted G		

Note: Test site name is remarked on the equipment list in each section of this report as an indication where measurements occurred in specific test site and address.

Unless otherwise stated the results shown in this test report refer only to the sample(s) tested and such sample(s) are retained for 90 days only.
除非另有說明，此報告結果僅對測試之樣品負責，同時此樣品僅保留90天。本報告未經本公司書面許可，不可部份複製。
This document is issued by the Company subject to its General Conditions of Service printed overleaf, available on request or accessible at http://www.sgs.com.tw/Terms-and-Conditions and for electronic format documents, subject to Terms and Conditions for Electronic Documents at http://www.sgs.com.tw/Terms-and-Conditions. Attention is drawn to the limitation of liability, indemnification and jurisdiction issues defined therein. Any holder of this document is advised that information contained hereon reflects the Company's findings at the time of its intervention only and within the limits of Client's instructions, if any. The Company's sole responsibility is to its Client and this document does not exonerate parties to a transaction from exercising all their rights and obligations under the transaction documents. This document cannot be reproduced except in full, without prior written approval of the Company. Any unauthorized alteration, forgery or falsification of the content or appearance of this document is unlawful and offenders may be prosecuted to the fullest extent of the law.

1.7 Special Accessories

No special accessories were used during testing.

1.8 Equipment Modifications

There was no modifications incorporated into the EUT.

1.9 Radiated Emission Test Sites For Measurements From 9 kHz To 30 MHz

Radiated emission below 30MHz is measured in a 9m*6m*6m semi-anechoic chamber, the measurements correspond to those obtained at an open-field test site.
There is a comparison data of both open-field test site and semi-Anechoic chamber, and the result came out very similar.

Unless otherwise stated the results shown in this test report refer only to the sample(s) tested and such sample(s) are retained for 90 days only.
除非另有說明，此報告結果僅對測試之樣品負責，同時此樣品僅保留90天。本報告未經本公司書面許可，不可部份複製。
This document is issued by the Company subject to its General Conditions of Service printed overleaf, available on request or accessible at http://www.sgs.com.tw/Terms-and-Conditions and for electronic format documents, subject to Terms and Conditions for Electronic Documents at http://www.sgs.com.tw/Terms-and-Conditions. Attention is drawn to the limitation of liability, indemnification and jurisdiction issues defined therein. Any holder of this document is advised that information contained hereon reflects the Company's findings at the time of its intervention only and within the limits of Client's instructions, if any. The Company's sole responsibility is to its Client and this document does not exonerate parties to a transaction from exercising all their rights and obligations under the transaction documents. This document cannot be reproduced except in full, without prior written approval of the Company. Any unauthorized alteration, forgery or falsification of the content or appearance of this document is unlawful and offenders may be prosecuted to the fullest extent of the law.

2 SYSTEM TEST CONFIGURATION

2.1 EUT Configuration

The EUT configuration for testing is installed on RF field strength measurement to meet the Commissions requirement and operating in a manner which intends to maximize its emission characteristics in a continuous normal application.

2.2 EUT Exercise

The EUT (Transmitter) was operated in the continuous transmission mode employed with the simulator of the Base Station that fixates at test default channels to fix the Tx frequency which was for the purpose of the measurements.

2.3 Test Procedure

2.3.1 Conducted Measurement at Antenna Port

The EUT is placed on a table which is 0.8 m above ground plane. A low loss of RF cable was used to connect the antenna port of EUT to measurement equipment.

2.3.2 Radiated Emissions (ERP/EIRP)

The EUT is placed on a turn table, for emission measurements below 1 GHz is 0.8 m above ground plane, for emission measurements above 1 GHz, the table height shall be 1.5 m. The turn table shall rotate 360 degrees to determine the position of maximum emission level. EUT is set 3m away from the receiving antenna which varied from 1m to 4m to find out the highest emission. And also, each emission was to be maximized by changing the polarization of receiving antenna both Horizontal and Vertical. In order to find out the max. emission, the relative positions of this transmitter (EUT) was rotated through three orthogonal axes and measurement procedures for electric field radiated emissions above 1 GHz the EUT measurement is to be made “while keeping the antenna in the ‘cone of radiation’ from that area and pointed at the area both in azimuth and elevation, with polarization oriented for maximum response.” is still within the 3dB illumination BW of the measurement antenna.

2.4 Measurement Results Explanation Example

For all conducted test items:
The offset level is set in the spectrum analyzer to compensate the RF cable loss and attenuation factor between EUT conducted port and spectrum analyzer. With the offset compensation, the spectrum analyzer reading level is exactly EUT RF output level.
Note:
The spectrum analyzer offset is derived from RF cable loss and attenuator factor.

Unless otherwise stated the results shown in this test report refer only to the sample(s) tested and such sample(s) are retained for 90 days only.
除非另有說明，此報告結果僅對測試之樣品負責，同時此樣品僅保留90天。本報告未經本公司書面許可，不可部份複製。
This document is issued by the Company subject to its General Conditions of Service printed overleaf, available on request or accessible at http://www.sgs.com.tw/Terms-and-Conditions and for electronic format documents, subject to Terms and Conditions for Electronic Documents at http://www.sgs.com.tw/Terms-and-Conditions. Attention is drawn to the limitation of liability, indemnification and jurisdiction issues defined therein. Any holder of this document is advised that information contained hereon reflects the Company’s findings at the time of its intervention only and within the limits of Client’s instructions, if any. The Company’s sole responsibility is to its Client and this document does not exonerate parties to a transaction from exercising all their rights and obligations under the transaction documents. This document cannot be reproduced except in full, without prior written approval of the Company. Any unauthorized alteration, forgery or falsification of the content or appearance of this document is unlawful and offenders may be prosecuted to the fullest extent of the law.

2.5 Final Amplifier Voltage and Current Information:

LTE Band 2

Test mode	DC voltage (V)	DC current (mA)
LTE Band 2_20M QPSK	3.3	410

LTE Band 4

Test mode	DC voltage (V)	DC current (mA)
LTE Band 4_20M QPSK	3.3	430

LTE Band 5

Test mode	DC voltage (V)	DC current (mA)
LTE Band 5_10M QPSK	3.3	420

LTE Band 7

Test mode	DC voltage (V)	DC current (mA)
LTE Band 7_20M QPSK	3.3	420

LTE Band 12

Test mode	DC voltage (V)	DC current (mA)
LTE Band 12_10M QPSK	3.3	440

LTE Band 13

Test mode	DC voltage (V)	DC current (mA)
LTE Band 13_10M QPSK	3.3	420

LTE Band 14

Test mode	DC voltage (V)	DC current (mA)
LTE Band 14_10M QPSK	3.3	410

Unless otherwise stated the results shown in this test report refer only to the sample(s) tested and such sample(s) are retained for 90 days only.
除非另有說明，此報告結果僅對測試之樣品負責，同時此樣品僅保留90天。本報告未經本公司書面許可，不可部份複製。
This document is issued by the Company subject to its General Conditions of Service printed overleaf, available on request or accessible at http://www.sgs.com.tw/Terms-and-Conditions and for electronic format documents, subject to Terms and Conditions for Electronic Documents at http://www.sgs.com.tw/Terms-and-Conditions. Attention is drawn to the limitation of liability, indemnification and jurisdiction issues defined therein. Any holder of this document is advised that information contained hereon reflects the Company's findings at the time of its intervention only and within the limits of Client's instructions, if any. The Company's sole responsibility is to its Client and this document does not exonerate parties to a transaction from exercising all their rights and obligations under the transaction documents. This document cannot be reproduced except in full, without prior written approval of the Company. Any unauthorized alteration, forgery or falsification of the content or appearance of this document is unlawful and offenders may be prosecuted to the fullest extent of the law.

LTE Band 17

Test mode	DC voltage (V)	DC current (mA)
LTE Band 17_10M QPSK	3.3	430

LTE Band 25

Test mode	DC voltage (V)	DC current (mA)
LTE Band 25_20M QPSK	3.3	460

LTE Band 26

Test mode	DC voltage (V)	DC current (mA)
LTE Band 26_15M QPSK	3.3	410

LTE Band 26 for Part 90S

Test Mode	DC voltage (V)	DC current (mA)
LTE Band 26_10M QPSK	3.3	420

LTE Band 30

Test mode	DC voltage (V)	DC current (mA)
LTE Band 30_10M QPSK	3.3	450

LTE Band 38

Test mode	DC voltage (V)	DC current (mA)
LTE Band 38_20M QPSK	3.3	440

LTE Band 41

Test Mode	DC voltage (V)	DC current (mA)
LTE Band 41_20M QPSK	3.3	420

Unless otherwise stated the results shown in this test report refer only to the sample(s) tested and such sample(s) are retained for 90 days only.
除非另有說明，此報告結果僅對測試之樣品負責，同時此樣品僅保留90天。本報告未經本公司書面許可，不可部份複製。
This document is issued by the Company subject to its General Conditions of Service printed overleaf, available on request or accessible at http://www.sgs.com.tw/Terms-and-Conditions and for electronic format documents, subject to Terms and Conditions for Electronic Documents at http://www.sgs.com.tw/Terms-and-Conditions. Attention is drawn to the limitation of liability, indemnification and jurisdiction issues defined therein. Any holder of this document is advised that information contained hereon reflects the Company's findings at the time of its intervention only and within the limits of Client's instructions, if any. The Company's sole responsibility is to its Client and this document does not exonerate parties to a transaction from exercising all their rights and obligations under the transaction documents. This document cannot be reproduced except in full, without prior written approval of the Company. Any unauthorized alteration, forgery or falsification of the content or appearance of this document is unlawful and offenders may be prosecuted to the fullest extent of the law.

LTE Band 66

Test mode	DC voltage (V)	DC current (mA)
LTE Band 66_20M QPSK	3.3	430

LTE Band 71

Test mode	DC voltage (V)	DC current (mA)
LTE Band 71_20M QPSK	3.3	410

2.6 Test Configuration

Conducted Setup

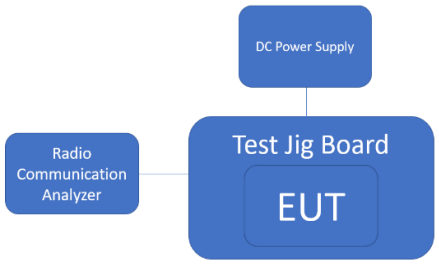

Radiated Setup

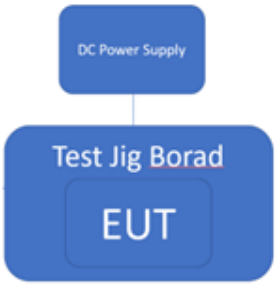

Note: Radio Communication Analyzer is placed in remote side for radiated test.

2.7 Control Unit(s)

N/A

Unless otherwise stated the results shown in this test report refer only to the sample(s) tested and such sample(s) are retained for 90 days only.
除非另有說明，此報告結果僅對測試之樣品負責，同時此樣品僅保留90天。本報告未經本公司書面許可，不可部份複製。
This document is issued by the Company subject to its General Conditions of Service printed overleaf, available on request or accessible at http://www.sgs.com.tw/Terms-and-Conditions and for electronic format documents, subject to Terms and Conditions for Electronic Documents at http://www.sgs.com.tw/Terms-and-Conditions. Attention is drawn to the limitation of liability, indemnification and jurisdiction issues defined therein. Any holder of this document is advised that information contained hereon reflects the Company's findings at the time of its intervention only and within the limits of Client's instructions, if any. The Company's sole responsibility is to its Client and this document does not exonerate parties to a transaction from exercising all their rights and obligations under the transaction documents. This document cannot be reproduced except in full, without prior written approval of the Company. Any unauthorized alteration, forgery or falsification of the content or appearance of this document is unlawful and offenders may be prosecuted to the fullest extent of the law.

3 SUMMARY OF TEST RESULTS

FCC Rules	IC Rules	Description Of Test	Result
§2.1046(a)	RSS-GEN §6.12	RF Power Output	Compliant
§22.913(a)(5) §24.232(c) §27.50(a)(3)(i) §27.50(b)(9) §27.50(c)(9) §27.50(d)(4) §27.50(h)(2) §90.542(a)(6) §90.635(b)	RSS-130 §4.6.3 RSS-132 §5.4 RSS-133 §5.5 RSS-139 §6.5 RSS-140 §4.3 RSS-195 §5.5 RSS-199 §4.4	ERP/ EIRP measurement	Compliant
§2.1049(h)	RSS-GEN §6.7	99% & 26dB Occupied Bandwidth	Compliant
§2.1051 §22.917(a)(b) §24.238(a)(b) §27.50(a)(4) §27.53(c)(2)&(5) §27.53(g) §27.53(h)(1)&(3) §27.53(m) §27.53(m)(4) §90.543(e)(2)~(5) §90.691(a)	RSS-GEN §6.13 RSS-130 §4.7 RSS-132 §5.5 RSS-133 §6.5 RSS-139 §6.6 RSS-140 §4.4 RSS-195 §5.6 RSS-199 §4.5	Out of Band Emissions at Antenna Terminals and Band Edge / Emission mask requirements	Compliant
§2.1053 §22.917(a)(b) §24.238(a)(b) §27.53(c)(2)~(6) §27.53(a)(4) §27.53(f) §27.53(g) §27.53(h) §27.53(h)(1)&(3) §27.53(m)(4) §90.543(e)(2)~(5) §90.543(f) §90.691(a)	RSS-GEN §6.13 RSS-130 §4.7 RSS-132 §5.5 RSS-133 §6.5 RSS-139 §6.6 RSS-140 §4.4 RSS-195 §5.6 RSS-199 §4.5	Field Strength of Spurious Radiation	Compliant

Unless otherwise stated the results shown in this test report refer only to the sample(s) tested and such sample(s) are retained for 90 days only.
除非另有說明，此報告結果僅對測試之樣品負責，同時此樣品僅保留90天。本報告未經本公司書面許可，不可部份複製。
This document is issued by the Company subject to its General Conditions of Service printed overleaf, available on request or accessible at http://www.sgs.com.tw/Terms-and-Conditions and for electronic format documents, subject to Terms and Conditions for Electronic Documents at http://www.sgs.com.tw/Terms-and-Conditions. Attention is drawn to the limitation of liability, indemnification and jurisdiction issues defined therein. Any holder of this document is advised that information contained hereon reflects the Company's findings at the time of its intervention only and within the limits of Client's instructions, if any. The Company's sole responsibility is to its Client and this document does not exonerate parties to a transaction from exercising all their rights and obligations under the transaction documents. This document cannot be reproduced except in full, without prior written approval of the Company. Any unauthorized alteration, forgery or falsification of the content or appearance of this document is unlawful and offenders may be prosecuted to the fullest extent of the law.

§22.913(d) §24.232(d) §27.50(a)(1)(B) §27.50(d)(5) §27.50(a)(B)	RSS-130 §4.6.1 RSS-132 §5.4 RSS-133 §5.5 RSS-139 §5.5 RSS-140 §4.3 RSS-195 §5.4 RSS-199 §5.5	Peak to Average Ratio	Compliant
§2.1055(a)(1) §22.355 §24.235 §27.54 §90.539 (e)	RSS-130 §4.5 RSS-132 §5.3 RSS-133 §5.4 RSS-139 §5.4 RSS-140 §4.2 RSS-195 §5.4 RSS-199 §5.4	Frequency Stability	Compliant

Unless otherwise stated the results shown in this test report refer only to the sample(s) tested and such sample(s) are retained for 90 days only.
除非另有說明，此報告結果僅對測試之樣品負責，同時此樣品僅保留90天。本報告未經本公司書面許可，不可部份複製。
This document is issued by the Company subject to its General Conditions of Service printed overleaf, available on request or accessible at http://www.sgs.com.tw/Terms-and-Conditions and for electronic format documents, subject to Terms and Conditions for Electronic Documents at http://www.sgs.com.tw/Terms-and-Conditions. Attention is drawn to the limitation of liability, indemnification and jurisdiction issues defined therein. Any holder of this document is advised that information contained hereon reflects the Company's findings at the time of its intervention only and within the limits of Client's instructions, if any. The Company's sole responsibility is to its Client and this document does not exonerate parties to a transaction from exercising all their rights and obligations under the transaction documents. This document cannot be reproduced except in full, without prior written approval of the Company. Any unauthorized alteration, forgery or falsification of the content or appearance of this document is unlawful and offenders may be prosecuted to the fullest extent of the law.

4 DESCRIPTION OF TEST MODES

4.1 The Worst Test Modes and Channel Details

1. The EUT has been tested under operating condition.
2. Pre-Scan has been conducted to determine the worst-case scenario from all possible combinations among available modulations, data rates and antenna ports, the worst case configurations listed below for the final test.
3. The field strength of radiated emission was measured as the EUT positioned in different orthogonal planes (E1/E2/H) based on actual usage of the EUT to pre-scan the emissions for determining the worst case scenario.

4.2 Measurement Configuration

Test Items				Max. Output Power												
Band	Test Channel			Bandwidth (MHz)						Modulation				RB #		
	L	M	H	1.4	3	5	10	15	20	QPSK	16QAM	64QAM	256QAM	1	Half	Full
2	v	v	v	v	v	v	v	v	v	v	v	v	v	v	v	v
4	v	v	v	v	v	v	v	v	v	v	v	v	v	v	v	v
5	v	v	v	v	v	v	v	-	-	v	v	v	v	v	v	v
7	v	v	v	-	-	v	v	v	v	v	v	v	v	v	v	v
12	v	v	v	v	v	v	v	-	-	v	v	v	v	v	v	v
13	v	v	v	-	-	v	v	-	-	v	v	v	v	v	v	v
14	v	v	v	-	-	v	v	-	-	v	v	v	v	v	v	v
17	v	v	v	-	-	v	v	-	-	v	v	v	v	v	v	v
25	v	v	v	v	v	v	v	v	v	v	v	v	v	v	v	v
26	v	v	v	v	v	v	v	v	-	v	v	v	v	v	v	v
26 P90	v	v	v	v	v	v	v	-	-	v	v	v	v	v	v	v
30	v	v	v	-	-	v	v	-	-	v	v	v	v	v	v	v
38	v	v	v	-	-	v	v	v	v	v	v	v	v	v	v	v
41	v	v	v	-	-	v	v	v	v	v	v	v	v	v	v	v
66	v	v	v	v	v	v	v	v	v	v	v	v	v	v	v	v
71	v	v	v	-	-	v	v	v	v	v	v	v	v	v	v	v
Test Items				Freqency Stability												
2	-	v	-	-	-	-	v	-	-	v	-	-	-	-	-	v
4	-	v	-	-	-	-	v	-	-	v	-	-	-	-	-	v
5	-	v	-	-	-	-	v	-	-	v	-	-	-	-	-	v
7	-	v	-	-	-	-	v	-	-	v	-	-	-	-	-	v
12	-	v	-	-	-	-	v	-	-	v	-	-	-	-	-	v
13	-	v	-	-	-	-	v	-	-	v	-	-	-	-	-	v
14	-	v	-	-	-	-	v	-	-	v	-	-	-	-	-	v
17	-	v	-	-	-	-	v	-	-	v	-	-	-	-	-	v
25	-	v	-	-	-	-	v	-	-	v	-	-	-	-	-	v
26	-	v	-	-	-	-	v	-	-	v	-	-	-	-	-	v
26 P90	-	v	-	-	-	-	v	-	-	v	-	-	-	-	-	v
30	-	v	-	-	-	-	v	-	-	v	-	-	-	-	-	v
38	-	v	-	-	-	-	v	-	-	v	-	-	-	-	-	v
41	-	v	-	-	-	-	v	-	-	v	-	-	-	-	-	v
66	-	v	-	-	-	-	v	-	-	v	-	-	-	-	-	v
71	-	v	-	-	-	-	v	-	-	v	-	-	-	-	-	v

Unless otherwise stated the results shown in this test report refer only to the sample(s) tested and such sample(s) are retained for 90 days only.
除非另有說明，此報告結果僅對測試之樣品負責，同時此樣品僅保留90天。本報告未經本公司書面許可，不可部份複製。
This document is issued by the Company subject to its General Conditions of Service printed overleaf, available on request or accessible at http://www.sgs.com.tw/Terms-and-Conditions and for electronic format documents, subject to Terms and Conditions for Electronic Documents at http://www.sgs.com.tw/Terms-and-Conditions. Attention is drawn to the limitation of liability, indemnification and jurisdiction issues defined therein. Any holder of this document is advised that information contained hereon reflects the Company's findings at the time of its intervention only and within the limits of Client's instructions, if any. The Company's sole responsibility is to its Client and this document does not exonerate parties to a transaction from exercising all their rights and obligations under the transaction documents. This document cannot be reproduced except in full, without prior written approval of the Company. Any unauthorized alteration, forgery or falsification of the content or appearance of this document is unlawful and offenders may be prosecuted to the fullest extent of the law.

Test Items				26dB and 99% Bandwidth												
Band	Test Channel			Bandwidth (MHz)						Modulation				RB #		
	L	M	H	1.4	3	5	10	15	20	QPSK	16QAM	64QAM	256QAM	1	Half	Full
2	v	v	v	v	v	v	v	v	v	v	v	v	v	-	-	v
4	v	v	v	v	v	v	v	v	v	v	v	v	v	-	-	v
5	v	v	v	v	v	v	v	-	-	v	v	v	v	-	-	v
7	v	v	v	-	-	v	v	v	v	v	v	v	v	-	-	v
12	v	v	v	v	v	v	v	-	-	v	v	v	v	-	-	v
13	v	v	v	-	-	v	v	-	-	v	v	v	v	-	-	v
14	v	v	v	-	-	v	v	-	-	v	v	v	v	-	-	v
17	v	v	v	-	-	v	v	-	-	v	v	v	v	-	-	v
25	v	v	v	v	v	v	v	v	v	v	v	v	v	-	-	v
26	v	v	v	v	v	v	v	v	-	v	v	v	v	-	-	v
26 P90	v	v	v	v	v	v	v	-	-	v	v	v	v	-	-	v
30	v	v	v	-	-	v	v	-	-	v	v	v	v	-	-	v
38	v	v	v	-	-	v	v	v	v	v	v	v	v	-	-	v
41	v	v	v	-	-	v	v	v	v	v	v	v	v	-	-	v
66	v	v	v	v	v	v	v	v	v	v	v	v	v	-	-	v
71	v	v	v	-	-	v	v	v	v	v	v	v	v	-	-	v
Test Items				Peak-to-Av erage Ratio												
2	v	v	v	v	v	v	v	v	v	-	-	-	v	-	-	v
4	v	v	v	v	v	v	v	v	v	-	-	-	v	-	-	v
5	v	v	v	v	v	v	v	-	-	-	-	-	v	-	-	v
7	v	v	v	-	-	v	v	v	v	-	-	-	v	-	-	v
12	v	v	v	v	v	v	v	-	-	-	-	-	v	-	-	v
13	v	v	v	-	-	v	v	-	-	-	-	-	v	-	-	v
14	v	v	v	-	-	v	v	-	-	-	-	-	v	-	-	v
17	v	v	v	-	-	v	v	-	-	-	-	-	v	-	-	v
25	v	v	v	v	v	v	v	v	v	-	-	-	v	-	-	v
26	v	v	v	v	v	v	v	v	-	-	-	-	v	-	-	v
26 P90	v	v	v	v	v	v	v	-	-	-	-	-	v	-	-	v
30	v	v	v	-	-	v	v	-	-	-	-	-	v	-	-	v
38	v	v	v	-	-	v	v	v	v	-	-	-	v	-	-	v
41	v	v	v	-	-	v	v	v	v	-	-	-	v	-	-	v
66	v	v	v	v	v	v	v	v	v	-	-	-	v	-	-	v
71	v	v	v	-	-	v	v	v	v	-	-	-	v	-	-	v

Unless otherwise stated the results shown in this test report refer only to the sample(s) tested and such sample(s) are retained for 90 days only.
除非另有說明，此報告結果僅對測試之樣品負責，同時此樣品僅保留90天。本報告未經本公司書面許可，不可部份複製。
This document is issued by the Company subject to its General Conditions of Service printed overleaf, available on request or accessible at http://www.sgs.com.tw/Terms-and-Conditions and for electronic format documents, subject to Terms and Conditions for Electronic Documents at http://www.sgs.com.tw/Terms-and-Conditions. Attention is drawn to the limitation of liability, indemnification and jurisdiction issues defined therein. Any holder of this document is advised that information contained hereon reflects the Company's findings at the time of its intervention only and within the limits of Client's instructions, if any. The Company's sole responsibility is to its Client and this document does not exonerate parties to a transaction from exercising all their rights and obligations under the transaction documents. This document cannot be reproduced except in full, without prior written approval of the Company. Any unauthorized alteration, forgery or falsification of the content or appearance of this document is unlawful and offenders may be prosecuted to the fullest extent of the law.

Test Items				Band Edge												
Band	Test Channel			Bandwidth (MHz)						Modulation				RB #		
	L	M	H	1.4	3	5	10	15	20	QPSK	16QAM	64QAM	256QAM	1	Half	Full
2	v	-	v	v	v	v	v	v	v	v	-	-	-	v	v	v
4	v	-	v	v	v	v	v	v	v	v	-	-	-	v	v	v
5	v	-	v	v	v	v	v	-	-	v	-	-	-	v	v	v
7	v	-	v	-	-	v	v	v	v	v	-	-	-	v	v	v
12	v	-	v	v	v	v	v	-	-	v	-	-	-	v	v	v
13	v	-	v	-	-	v	v	-	-	v	-	-	-	v	v	v
14	v	-	v	-	-	v	v	-	-	v	-	-	-	v	v	v
17	v	-	v	-	-	v	v	-	-	v	-	-	-	v	v	v
25	v	-	v	v	v	v	v	v	v	v	-	-	-	v	v	v
26	v	-	v	v	v	v	v	v	-	v	-	-	-	v	v	v
26 P90	v	-	v	v	v	v	v	-	-	v	-	-	-	v	v	v
30	v	-	v	-	-	v	v	-	-	v	-	-	-	v	v	v
38	v	-	v	-	-	v	v	v	v	v	-	-	-	v	v	v
41	v	-	v	-	-	v	v	v	v	v	-	-	-	v	v	v
66	v	-	v	v	v	v	v	v	v	v	-	-	-	v	v	v
71	v	-	v	-	-	v	v	v	v	v	-	-	-	v	v	v
Test Items				Conducted Emission												
2	v	v	v	-	-		-	-	-	v	-	-	-	v	-	-
4	v	v	v	-	-		-	-	-	v	-	-	-	v	-	-
5	v	v	v	-	-		-	-	-	v	-	-	-	v	-	-
7	v	v	v	-	-		-	-	-	v	-	-	-	v	-	-
12	v	v	v	-	-	-		-	-	v	-	-	-	v	-	-
13	v	v	v	-	-	-		-	-	v	-	-	-	v	-	-
14	v	v	v	-	-		-	-	-	v	-	-	-	v	-	-
17	v	v	v	-	-		-	-	-	v	-	-	-	v	-	-
25	v	v	v	-	-		-	-	-	v	-	-	-	v	-	-
26	v	v	v	-	-		-	-	-	v	-	-	-	v	-	-
26 P90	v	v	v	-	-		-	-	-	v	-	-	-	v	-	-
30	v	v	v	-	-		-	-	-	v	-	-	-	v	-	-
38	v	v	v	-	-		-	-	-	v	-	-	-	v	-	-
41	v	v	v	-	-		-	-	-	v	-	-	-	v	-	-
66	v	v	v	-	-		-	-	-	v	-	-	-	v	-	-
71	v	v	v	-	-		-	-	-	v	-	-	-	v	-	-
Test Items				Radiated Emission												
Band	Test Channel			Bandwidth (MHz)						Modulation				RB #		
	L	M	H	1.4	3	5	10	15	20	QPSK	16QAM	64QAM	256QAM	1	Half	Full
2	v	v	v	-	-		-	-	-	v	-	-	-	v	-	-
4	v	v	v	-	-		-	-	-	v	-	-	-	v	-	-
5	v	v	v	-	-		-	-	-	v	-	-	-	v	-	-
7	v	v	v	-	-		-	-	-	v	-	-	-	v	-	-
12	v	v	v	-	-	-		-	-	v	-	-	-	v	-	-
13	v	v	v	-	-	-		-	-	v	-	-	-	v	-	-
14	v	v	v	-	-		-	-	-	v	-	-	-	v	-	-
17	v	v	v	-	-		-	-	-	v	-	-	-	v	-	-
25	v	v	v	-	-		-	-	-	v	-	-	-	v	-	-
26	v	v	v	-	-		-	-	-	v	-	-	-	v	-	-
26 P90	v	v	v	-	-		-	-	-	v	-	-	-	v	-	-
30	v	v	v	-	-		-	-	-	v	-	-	-	v	-	-
38	v	v	v	-	-		-	-	-	v	-	-	-	v	-	-
41	v	v	v	-	-		-	-	-	v	-	-	-	v	-	-
66	v	v	v	-	-		-	-	-	v	-	-	-	v	-	-
71	v	v	v	-	-		-	-	-	v	-	-	-	v	-	-

Unless otherwise stated the results shown in this test report refer only to the sample(s) tested and such sample(s) are retained for 90 days only.
除非另有說明，此報告結果僅對測試之樣品負責，同時此樣品僅保留90天。本報告未經本公司書面許可，不可部份複製。
This document is issued by the Company subject to its General Conditions of Service printed overleaf, available on request or accessible at http://www.sgs.com.tw/Terms-and-Conditions and for electronic format documents, subject to Terms and Conditions for Electronic Documents at http://www.sgs.com.tw/Terms-and-Conditions. Attention is drawn to the limitation of liability, indemnification and jurisdiction issues defined therein. Any holder of this document is advised that information contained hereon reflects the Company's findings at the time of its intervention only and within the limits of Client's instructions, if any. The Company's sole responsibility is to its Client and this document does not exonerate parties to a transaction from exercising all their rights and obligations under the transaction documents. This document cannot be reproduced except in full, without prior written approval of the Company. Any unauthorized alteration, forgery or falsification of the content or appearance of this document is unlawful and offenders may be prosecuted to the fullest extent of the law.

5 MEASUREMENT UNCERTAINTY

Test Items	Uncertainty		
Power Density	+/-	0.61	dB
Output Power measurement	+/-	0.97	dB
ERP/ EIRP measurement	+/-	2.16	dB
	+/-	2.16	dB
Emission Bandwidth	+/-	1.38	Hz
Out of Band Emissions at Antenna Terminals and Band Edge	+/-	0.77	dB
Peak to Average Ratio	+/-	0.97	dB
Frequency Stability vs. Temperature	+/-	1.48	Hz
Frequency Stability vs. Voltage	+/-	1.48	Hz
Temperature	+/-	0.6	°C
Humidity	+/-	3	%
DC / AC Power Source	+/-	1	%

Radiated Spurious Emission Measurement Uncertainty				
Polarization: Vertical	**+/-**	**1.89**	**dB**	9kHz~30MHz
	+/-	**4.1**	**dB**	30MHz - 1000MHz
	+/-	**3.37**	**dB**	1GHz - 18GHz
	+/-	**3.83**	**dB**	18GHz - 40GHz
Polarization: Horizontal	**+/-**	**1.89**	**dB**	9kHz~30MHz
	+/-	**4.1**	**dB**	30MHz - 1000MHz
	+/-	**3.37**	**dB**	1GHz - 18GHz
	+/-	**3.83**	**dB**	18GHz - 40GHz
Radiated Spurious Emission	**+/-**	**2**	**dB**	33GHz-50GHz
	+/-	**1.59**	**dB**	50GHz-60GHz
	+/-	**1.71**	**dB**	60GHz-90GHz
	+/-	**1.64**	**dB**	90GHz-140GHz
	+/-	**3.84**	**dB**	140GHz-220GHz

This uncertainty represents an expanded uncertainty expressed at approximately the 95% confidence level using a coverage factor of k=2.

Unless otherwise stated the results shown in this test report refer only to the sample(s) tested and such sample(s) are retained for 90 days only.
除非另有說明，此報告結果僅對測試之樣品負責，同時此樣品僅保留90天。本報告未經本公司書面許可，不可部份複製。
This document is issued by the Company subject to its General Conditions of Service printed overleaf, available on request or accessible at http://www.sgs.com.tw/Terms-and-Conditions and for electronic format documents, subject to Terms and Conditions for Electronic Documents at http://www.sgs.com.tw/Terms-and-Conditions. Attention is drawn to the limitation of liability, indemnification and jurisdiction issues defined therein. Any holder of this document is advised that information contained hereon reflects the Company's findings at the time of its intervention only and within the limits of Client's instructions, if any. The Company's sole responsibility is to its Client and this document does not exonerate parties to a transaction from exercising all their rights and obligations under the transaction documents. This document cannot be reproduced except in full, without prior written approval of the Company. Any unauthorized alteration, forgery or falsification of the content or appearance of this document is unlawful and offenders may be prosecuted to the fullest extent of the law.

6 MEASUREMENT EQUIPMENT USED

6.1 Conducted Measurement

Conducted Emission Test Site: Conducted 3					
EQUIPMENT TYPE	MFR	MODEL NUMBER	SERIAL NUMBER	LAST CAL. (mm/dd/yyyy)	CAL DUE. (mm/dd/yyyy)
Attenuator	Mini-Circuits	BW-S10W2+	16	12/11/2024	12/10/2025
DC Block	Mini-Circuits	BLK-18-S+	12	12/11/2024	12/10/2025
DC Power Supply	Gwinstek	SPS-3610	GEV856761	09/13/2024	09/12/2025
EXA Spectrum Analyzer	KEYSIGHT	N9010B	MY60240503	12/16/2024	12/15/2025
Radio Communication Analyzer	Anritsu	MT8821C	6262044751	11/04/2024	11/03/2025
Splitter	RF-Lambda	RFLT2W1G18G	11-JSPF412-018	12/11/2024	12/10/2025
Temperature Chamber	Giant Force	GTH-150-40-CP-AR	MAA0512-018	06/05/2024	06/04/2025
Test Software	SGS	Radio Test Software	Ver. 21	N.C.R	N.C.R

Unless otherwise stated the results shown in this test report refer only to the sample(s) tested and such sample(s) are retained for 90 days only.
除非另有說明，此報告結果僅對測試之樣品負責，同時此樣品僅保留90天。本報告未經本公司書面許可，不可部份複製。
This document is issued by the Company subject to its General Conditions of Service printed overleaf, available on request or accessible at http://www.sgs.com.tw/Terms-and-Conditions and for electronic format documents, subject to Terms and Conditions for Electronic Documents at http://www.sgs.com.tw/Terms-and-Conditions. Attention is drawn to the limitation of liability, indemnification and jurisdiction issues defined therein. Any holder of this document is advised that information contained hereon reflects the Company's findings at the time of its intervention only and within the limits of Client's instructions, if any. The Company's sole responsibility is to its Client and this document does not exonerate parties to a transaction from exercising all their rights and obligations under the transaction documents. This document cannot be reproduced except in full, without prior written approval of the Company. Any unauthorized alteration, forgery or falsification of the content or appearance of this document is unlawful and offenders may be prosecuted to the fullest extent of the law.

6.2 Radiated Measurement

Radiated Emission Test Site: SAC 3					
EQUIPMENT TYPE	MFR	MODEL NUMBER	SERIAL NUMBER	LAST CAL. (mm/dd/yyyy)	CAL DUE. (mm/dd/yyyy)
1G High Pass Filter	Micro-Tronics	HPM50108	32	12/11/2024	12/10/2025
2G High Pass Filter	Micro-Tronics	HPM50110	36	12/11/2024	12/10/2025
4G High Pass Filter	WI	WHKX4.0	22	12/11/2024	12/10/2025
Attenuator	Mini-Circuits	BW-S10W2+	16	12/11/2024	12/10/2025
Band Reject Filter 1700-2000	EWT	EWT-54-0038	M1	12/11/2024	12/10/2025
Band Reject Filter 2240-2700	WI	WRCJV2300/2700-2240/2760-40/12SS	1	12/11/2024	12/10/2025
Band Reject Filter 3250-3750	Micro-Tronics	BRM15247	1	12/11/2024	12/10/2025
Band Reject Filter 800-1000	EWT	EWT-54-0037	M3R	12/11/2024	12/10/2025
Bi-log Antenna	SCHWARZBECK	VULB9168	1208	07/17/2024	07/16/2025
Bi-log Antenna	SCHWARZBECK	VULB9168	378	08/09/2024	08/08/2025
Coaxial Cables	EMCI+Huber Suhner	EMC107-SM-SM-1000 +SUCOFLEX 104PEA +EMC107-SM-SM-1500 +SUCOFLEX 106	RX Cable 9K-18G (221110+MY4251/4 PEA+221106+76096 /6)	08/30/2024	08/29/2025
Coaxial Cables	Huber Suhner	SUCOFLEX 102	RX Cable 18G-40G MY2630/2+805062/ 2	08/30/2024	08/29/2025
Coaxial Cables	Huber Suhner	SUCOFLEX 102+SUCOFLEX 106	TX Cable 30M-40G 23051/2+76096/6+2 2962/2	08/30/2024	08/29/2025
DC Power Supply	Gwinstek	SPS-3610	GEV856733	12/04/2024	12/03/2025
EMI Test Receiver	R&S	ESCI 7	100759	08/28/2024	08/27/2025
EXA Spectrum Analyzer	KEYSIGHT	N9010B	MY63440386	02/05/2025	02/04/2026
Horn Antenna	RF SPIN	DRH0844	LE2D05A0844	07/10/2024	07/09/2025
Horn Antenna	SCHWARZBECK	BBHA9120D	1441	09/23/2024	09/22/2025
Horn Antenna	SCHWARZBECK	BBHA9120D	603	05/15/2024	05/14/2025
Horn Antenna	SCHWARZBECK	BBHA9170	184	12/20/2024	12/19/2025
Network Analyzer	R&S	ZNB 40	101842	05/16/2024	05/15/2025
Pre-Amplifier	EMCI	EMC118A45SEE	980868	08/30/2024	08/29/2025
Pre-Amplifier	EMCI	EMC184045SEE	9080939	08/30/2024	08/29/2025
Pre-Amplifier	HP	8447D	2944A07676	08/30/2024	08/29/2025
Radio Communication Analyzer	Anritsu	MT8821C	6262044670	08/23/2024	08/22/2025
Site Cal	SGS	SAC 3	N/A	08/30/2024	08/29/2025
Test Software	Audix	e3	Ver. 9.210616	N.C.R	N.C.R

NOTE: *N.C.R refers to Not Calibrated Required.*

Unless otherwise stated the results shown in this test report refer only to the sample(s) tested and such sample(s) are retained for 90 days only.
除非另有說明，此報告結果僅對測試之樣品負責，同時此樣品僅保留90天。本報告未經本公司書面許可，不可部份複製。
This document is issued by the Company subject to its General Conditions of Service printed overleaf, available on request or accessible at http://www.sgs.com.tw/Terms-and-Conditions and for electronic format documents, subject to Terms and Conditions for Electronic Documents at http://www.sgs.com.tw/Terms-and-Conditions. Attention is drawn to the limitation of liability, indemnification and jurisdiction issues defined therein. Any holder of this document is advised that information contained hereon reflects the Company's findings at the time of its intervention only and within the limits of Client's instructions, if any. The Company's sole responsibility is to its Client and this document does not exonerate parties to a transaction from exercising all their rights and obligations under the transaction documents. This document cannot be reproduced except in full, without prior written approval of the Company. Any unauthorized alteration, forgery or falsification of the content or appearance of this document is unlawful and offenders may be prosecuted to the fullest extent of the law.

7 STANDARD APPLICABLE

7.1 Maximum Output Power

A base station simulator was used to establish communication with the EUT. Its parameters were set to transmit the maximum power on the EUT. The measured power in the radio frequency on the transmitter output terminals.

7.1.1 ERP/EIRP LIMIT

According to FCC §2.1046

FCC 22.913(a)

(5) mobile transmitters and auxiliary test transmitters must not exceed 7 watts.

FCC 24.232(c)

Mobile and portable stations are limited to 2 W EIRP.

FCC 27.50 (a)

(3) for mobile and portable stations compliant with 3GPP LTE standards transmitting in the 2305-2315 MHz band or the 2350-2360 MHz band are limited to 250 mW/ 5MHz EIRP but may exceed 50 milliwatts within any 1 megahertz of authorized bandwidth.

FCC 27.50 (b)

(9) Control stations and mobile stations transmitting in the 746-757 MHz, 776-788 MHz, and 805-806 MHz bands are limited to 30 watts ERP.

FCC 27.50(c)

(9) Control and mobile stations in the 698-746 MHz band are limited to 30 watts ERP.

FCC 27.50(d)

(4) Mobile, and portable (hand-held) stations operating in the 1710-1755 MHz, 1695-1710 MHz and 1755-1780 MHz bands are limited to 1W EIRP.

FCC 27, 50(h)

(2) Mobile and other user stations transmitting in the BRS and EBS bands are limited to 2 W EIRP.

FCC 90.542(a)

(6) Control stations and mobile stations transmitting in the 758-768 MHz band and the 788-798 MHz band are limited to 30 watts ERP.

Unless otherwise stated the results shown in this test report refer only to the sample(s) tested and such sample(s) are retained for 90 days only.
除非另有說明，此報告結果僅對測試之樣品負責，同時此樣品僅保留90天。本報告未經本公司書面許可，不可部份複製。
This document is issued by the Company subject to its General Conditions of Service printed overleaf, available on request or accessible at http://www.sgs.com.tw/Terms-and-Conditions and for electronic format documents, subject to Terms and Conditions for Electronic Documents at http://www.sgs.com.tw/Terms-and-Conditions. Attention is drawn to the limitation of liability, indemnification and jurisdiction issues defined therein. Any holder of this document is advised that information contained hereon reflects the Company's findings at the time of its intervention only and within the limits of Client's instructions, if any. The Company's sole responsibility is to its Client and this document does not exonerate parties to a transaction from exercising all their rights and obligations under the transaction documents. This document cannot be reproduced except in full, without prior written approval of the Company. Any unauthorized alteration, forgery or falsification of the content or appearance of this document is unlawful and offenders may be prosecuted to the fullest extent of the law.

FCC 90.635(b)

Mobile station is limited to 100W ERP

RSS-130 §4.6

The e.r.p. shall not exceed 3 watts for mobile equipment, fixed subscriber equipment and portable equipment operating in the Band 617-652 and 663-698MHz.
The e.r.p. shall not exceed 3 watts for portable equipment and indoor fixed subscriber equipment operating in 698-756 and 777-787 MHz.

RSS-132 §5.4

The transmitter output power shall be measured in terms of average power. The equivalent radiated power (e.r.p.) shall not exceed 7 watts for mobile equipment and 3 watts for portable equipment.

RSS-133 §5.5

The maximum power spectral density of the equipment, measured in terms of average values, shall comply with the limits specified in table 2. These limits are either specified in terms of equivalent isotropically radiated power (e.i.r.p.) or TRP for the purpose of certification and may not apply to all deployment scenarios. Consult SRSP-510 for more deployment details in the bands 1850-1915 MHz and 1930-1995 MHz. AAS equipment with eight antenna elements or less can demonstrate compliance with the e.i.r.p limit specified for non-AAS equipment in table 2, instead of the TRP limit.

Table 2: Maximum power spectral density of equipment

Equipment type	Maximum power spectral density
Non-AAS fixed station and base station	3280 W/MHz e.i.r.p
AAS fixed station and base station	46 dBm/MHz TRP
Subscriber equipment	2 W /channel bandwidth e.i.r.p

RSS-139 §5.5

The maximum output power of the equipment shall comply with the limits specified below. In the tables, maximum power refers to the equivalent isotropically radiated power (e.i.r.p.) or total radiated power (TRP), measured in terms of average values.

The limits in this RSS are specified for the purpose of certification and may not apply to all deployment scenarios. Consult SRSP-513 and SRSP-519 for more details on the bands 2110-2180 MHz and 2180-2200 MHz respectively

Table 3: Maximum power of equipment in the band 1710-1780 MHz	
Equipment type	**Maximum power**
Fixed station and base station	30 dBm e.i.r.p./channel bandwidth
Subscriber equipment	30 dBm e.i.r.p./channel bandwidth

Unless otherwise stated the results shown in this test report refer only to the sample(s) tested and such sample(s) are retained for 90 days only.
除非另有說明，此報告結果僅對測試之樣品負責，同時此樣品僅保留90天。本報告未經本公司書面許可，不可部份複製。
This document is issued by the Company subject to its General Conditions of Service printed overleaf, available on request or accessible at http://www.sgs.com.tw/Terms-and-Conditions and for electronic format documents, subject to Terms and Conditions for Electronic Documents at http://www.sgs.com.tw/Terms-and-Conditions. Attention is drawn to the limitation of liability, indemnification and jurisdiction issues defined therein. Any holder of this document is advised that information contained hereon reflects the Company's findings at the time of its intervention only and within the limits of Client's instructions, if any. The Company's sole responsibility is to its Client and this document does not exonerate parties to a transaction from exercising all their rights and obligations under the transaction documents. This document cannot be reproduced except in full, without prior written approval of the Company. Any unauthorized alteration, forgery or falsification of the content or appearance of this document is unlawful and offenders may be prosecuted to the fullest extent of the law.

Table 4: Maximum power of equipment in the band 2110-2180 MHz	
Equipment type	**Maximum power**
Non-AAS fixed station and base station	65 dBm e.i.r.p./MHz
AAS fixed station and base station	46 dBm TRP/MHz
Subscriber equipment	30 dBm e.i.r.p./channel bandwidth

Table 5: Maximum power of equipment in the band 2180-2200 MHz	
Equipment type	**Maximum power**
Non-AAS base station	65 dBm e.i.r.p./MHz
AAS base station	46 dBm TRP/MHz

RSS-140 §4.3

The equivalent radiated power (e.r.p.) for control and mobile equipment shall not exceed 30 W. The e.r.p. for portable equipment including handheld devices shall not ex-ceed 3 W.

RSS-195 §5.5

The e.i.r.p. of mobile or portable equipment transmitting in the band 2305-2315 MHz or the band 2350-2360 MHz, employing 3GPP LTE (Third Generation Part-nership Project Long Term Evolution) standards, shall not exceed 250 mW within any 5 MHz bandwidth. For other technologies, the e.i.r.p. shall not exceed 50 mW within any 1 MHz bandwidth.

RSS-199 §5.5

For Subscriber equipment other than fixed subscriber equipment operating in the Band 2500-2690MHz, the e.i.r.p. shall not exceed 2 W.

7.2 Occupied Bandwidth Measurement

The occupied bandwidth is the frequency bandwidth such that, below its lower and above its upper frequency limits, the mean powers radiated are each equal to 0.5 percent of the total mean power.

7.3 Out Of Band Emission At Antenna Terminals

FCC §22.917(a), §24.238(a), §27.53(h), §90.543(e)(3)
RSS-130 §4.7, RSS-132 §5.5, RSS-133 §6.5.1, RSS-139 §5.6, RSS-140 §4.4, RSS-195 §5.6, RSS-199 §5.6

Out of band emissions.The power of any emission outside of the authorized operating frequency ranges must be attenuated below the transmitting power (P) by a factor of at least 43 + 10 log(P) dB.

FCC §27.53(a)

For operations in the 2305-2320 MHz band and the 2345-2360 MHz band, the power of any emission outside a licensee's frequency band(s) of operation shall be attenuated below the transmitter power P (with averaging performed only during periods of transmission) within the licensed band(s) of op-eration, in watts, by the following amounts:

(4) For mobile and portable stations operating in the 2305-2315 MHz and 2350-2360 MHz bands:

(i) By a factor of not less than: 43 + 10 log (P) dB on all frequencies between 2305 and 2320 MHz and on all frequencies between 2345 and 2360 MHz that are outside the licensed band(s) of operation, not less than 55 + 10 log (P) dB on all frequencies between 2320 and 2324 MHz

Unless otherwise stat
除非另有說明，此報告結果僅對測試之樣品負責，同時此樣品僅保留90天。本報告未經本公司書面許可，不可部份複製。
This document is issued by the Company subject to its General Conditions of Service printed overleaf, available on request or accessible at http://www.sgs.com.tw/Terms-and-Conditions and for electronic format documents, subject to Terms and Conditions for Electronic Documents at http://www.sgs.com.tw/Terms-and-Conditions. Attention is drawn to the limitation of liability, indemnification and jurisdiction issues defined therein. Any holder of this document is advised that information contained hereon reflects the Company's findings at the time of its intervention only and within the limits of Client's instructions, if any. The Company's sole responsibility is to its Client and this document does not exonerate parties to a transaction from exercising all their rights and obligations under the transaction documents. This document cannot be reproduced except in full, without prior written approval of the Company. Any unauthorized alteration, forgery or falsification of the content or appearance of this document is unlawful and offenders may be prosecuted to the fullest extent of the law.

and on all frequencies between 2341 and 2345 MHz, not less than 61 + 10 log (P) dB on all frequencies between 2324 and 2328 MHz and on all frequencies between 2337 and 2341 MHz, and not less than 67 + 10 log (P) dB on all frequencies between 2328 and 2337 MHz;

(ii) By a factor of not less than 43 + 10 log (P) dB on all frequencies between 2300 and 2305 MHz, 55 + 10 log (P) dB on all frequencies between 2296 and 2300 MHz, 61 + 10 log (P) dB on all frequencies between 2292 and 2296 MHz, 67 + 10 log (P) dB on all frequencies between 2288 and 2292 MHz, and 70 + 10 log (P) dB below 2288 MHz;

(iii) By a factor of not less than 43 + 10 log (P) dB on all frequencies between 2360 and 2365 MHz, and not less than 70 + 10 log (P) dB above 2365 MHz.

FCC §27.53(c)

For operations in the 746–758 MHz band and the 776–788 MHz band, the power of any emission outside the licensee's frequency band(s) of operation shall be attenuated below the transmitter power (P) within the licensed band(s) of operation, measured in watts, in accordance with the following:

(2) On any frequency outside the 776– 788 MHz band, the power of any emission shall be attenuated outside the band below the transmitter power (P) by at least 43 + 10 log (P) dB (-13dBm)

(4) On all frequencies between 763-775 MHz and 793-805 MHz, by a factor not less than 65 + 10 log (P) dB in a 6.25 kHz band segment, for mobile and portable stations;

FCC §27.53(g)

Compliance for operations in the 600 MHz, 698-746 MHz, 746-758 MHz and the 776-788 MHz band with this provision is based on the use of measurement instrumentation employing a resolution bandwidth of 100 kilohertz or greater. However, in the 100 kilohertz bands immediately outside and adjacent to a licensee's frequency block, a resolution bandwidth of at least 30 kHz may be employed.

(2) On any frequency outside the 776-788 MHz band, the power of any emission shall be attenuated outside the band below the transmitter power (P) by at least 43 + 10 log (P) dB;

(3) On all frequencies between 763-775 MHz and 793-805 MHz, by a factor not less than 76 + 10 log (P) dB in a 6.25 kHz band segment, for base and fixed stations;

(4) On all frequencies between 763-775 MHz and 793-805 MHz, by a factor not less than 65 + 10 log (P) dB in a 6.25 kHz band segment, for mobile and portable stations;

ISED RSS-130 §4.7.1

Compliance for operations in the 617-652 MHz, 663-698 MHz, 698-756 MHz and the 777-787 MHz band, the unwanted emissions in any 100 kHz bandwidth on any frequency outside the low frequency edge and the high frequency edge of each frequency block range(s), shall be attenuated below the transmitter power, P (dBW), by at least 43 + 10 log10 p (watts), dB. However, in the 100 kHz band immediately outside of the equipment's frequency block range, a resolution bandwidth of 30 kHz may be employed.

ISED RSS-130 §4.7.2

In addition to the limit outlined in section 4.7.1 above, equipment operating in the frequency bands 746-756 MHz and 777-787 MHz shall also comply with the following restrictions:

the power of any unwanted emissions in any 6.25 kHz bandwidth for all frequencies between 763-775 MHz and 793-806 MHz shall be attenuated below the transmitter power, P (dBW), by at least:

76 + 10 log10 p (watts), dB, for base and fixed equipment and
65 + 10 log10 p (watts), dB, for mobile and portable equipment

the e.i.r.p. in the band 1559-1610 MHz shall not exceed −70 dBW/MHz for wideband signal and −80 dBW for discrete emission with bandwidth less than 700 Hz.

Unless otherwise s 90 days only.
除非另有說明，此報告結果僅對測試之樣品負責，同時此樣品僅保留90天。本報告未經本公司書面許可，不可部份複製。
This document is issued by the Company subject to its General Conditions of Service printed overleaf, available on request or accessible at http://www.sgs.com.tw/Terms-and-Conditions and for electronic format documents, subject to Terms and Conditions for Electronic Documents at http://www.sgs.com.tw/Terms-and-Conditions. Attention is drawn to the limitation of liability, indemnification and jurisdiction issues defined therein. Any holder of this document is advised that information contained hereon reflects the Company's findings at the time of its intervention only and within the limits of Client's instructions, if any. The Company's sole responsibility is to its Client and this document does not exonerate parties to a transaction from exercising all their rights and obligations under the transaction documents. This document cannot be reproduced except in full, without prior written approval of the Company. Any unauthorized alteration, forgery or falsification of the content or appearance of this document is unlawful and offenders may be prosecuted to the fullest extent of the law.

ISED RSS-132 §5.5

i. Equipment shall meet the unwanted emission limits specified below:

In the first 1.0 MHz band immediately outside and adjacent to each of the sub-bands specified in Section 5.1, the power of emissions per any 1% of the occupied bandwidth shall be attenuated below the transmitter output power P (dBW) by at least 43 + 10 log(p) dB.

ii. After the first 1.0 MHz immediately outside and adjacent to each of the sub-bands, the power of emissions in any 100 kHz bandwidth shall be attenuated below the transmitter output power P (dBW) by at least 43 + 10 log(p) dB. If the measurement is performed using 1% of the occupied bandwidth, power integration over 100 kHz is required.

p is the output power specified in watts.

ISED RSS-133 §5.6

Unwanted emissions shall be measured in terms of average values while the transmitter is operating at the manufacturer's rated power and modulated as specified in RSS-Gen. Equipment shall meet the unwanted emission limits, specified in table 3, outside each frequency block group. For each channel bandwidth supported by the equipment under test, the unwanted emissions shall be measured and reported for two channel frequencies: one located as close as possible to the low end and one located as close as possible to the high end of the equipment's operating frequency range. For the unwanted emission limits, in the 1 MHz bands immediately outside and adjacent to the frequency block group, the power shall be measured with a resolution bandwidth of at least 1% of the occupied bandwidth (OBW). Beyond these 1 MHz bands, a resolution bandwidth of 1 MHz shall be used. A narrower resolution bandwidth may be used, provided that the Personal Communications Service Equipment Operating in the Bands 1850-1915 MHz and 1930-1995 MHz RSS-133 6 measured power is integrated over the full required measurement bandwidth of 1 MHz, or 1% of the OBW, as applicable. For all equipment, the TRP or total conducted power (sum of conducted power across all antenna connectors), where applicable, of the unwanted emissions outside the frequency block or frequency block group shall not exceed the limits shown in the table 3.

Table 3: Unwanted emission limits for all equipment

Offset frequency from the edge of the frequency block group (MHz)	Unwanted emission limits
≤1	-13 dBm/(1% of OB*)
>1 MHz	-13 dBm/MHz

FCC §27.53(h)(1)

(h) *AWS emission limits*—(1) *General protection levels.* Except as otherwise specified below, for operations in the 1695-1710 MHz, 1710-1755 MHz, 1755-1780 MHz, 1915-1920 MHz, 1995-2000 MHz, 2000-2020 MHz, 2110-2155 MHz, 2155-2180 MHz, and 2180-2200 bands, the power of any emission outside a licensee's frequency block shall be attenuated below the transmitter power (P) in watts by at least 43 + 10 $\log_{10}$ (P) dB.

RSS-139 §5.6

Unwanted emissions shall be measured in terms of average values.

Unless otherwise stated the results shown in this test report refer only to the sample(s) tested and such sample(s) are retained for 90 days only.
除非另有說明，此報告結果僅對測試之樣品負責，同時此樣品僅保留90天。本報告未經本公司書面許可，不可部份複製。
This document is issued by the Company subject to its General Conditions of Service printed overleaf, available on request or accessible at http://www.sgs.com.tw/Terms-and-Conditions and for electronic format documents, subject to Terms and Conditions for Electronic Documents at http://www.sgs.com.tw/Terms-and-Conditions. Attention is drawn to the limitation of liability, indemnification and jurisdiction issues defined therein. Any holder of this document is advised that information contained hereon reflects the Company's findings at the time of its intervention only and within the limits of Client's instructions, if any. The Company's sole responsibility is to its Client and this document does not exonerate parties to a transaction from exercising all their rights and obligations under the transaction documents. This document cannot be reproduced except in full, without prior written approval of the Company. Any unauthorized alteration, forgery or falsification of the content or appearance of this document is unlawful and offenders may be prosecuted to the fullest extent of the law.

For all equipment, the TRP or total conducted power (sum of conducted power across all antenna connectors) of the unwanted emissions outside the frequency block or frequency block group shall not exceed the limits shown in table 6.

Table 6: Table 6: Unwanted emission limits	
Offset from the edge of the frequency block or frequency block group	**Unwanted emission limits**
1 MHz	-13 dBm/(1% of OB*)
>1 MHz	-13 dBm/MHz
Subscriber equipment	30 dBm e.i.r.p./channel bandwidth

*OB is the occupied bandwidth.

In addition to complying with the above limits, equipment operating in the band 2180-2200 MHz may require additional filtering (see SRSP-519).

ISED RSS-140 §4.4

a. For any frequency between 769-775 MHz and 799-806 MHz:
   i. 76 + 10 log (p), dB in a 6.25 kHz band for fixed and base station equipment
   ii. 65 + 10 log (p), dB in a 6.25 kHz band for mobile and portable/hand-held equipment

b. For any frequency between 775-788 MHz, above 806 MHz, and below 758 MHz: 43 + 10 log (p), dB in a bandwidth of 100 kHz or greater. However, in the 100 kHz bands immediately outside and adjacent to the frequency bands 758-768 MHz and 788-798 MHz, a resolution bandwidth of 30 kHz may be employed.

FCC §27.53(m) (4) (6)

For mobile digital stations, the attenuation factor shall be not less than 40 + 10 log (P) dB on all frequencies between the channel edge and 5 megahertz from the channel edge, 43 + 10 log (P) dB on all frequencies between 5 megahertz and X megahertz from the channel edge, and 55 + 10 log (P) dB on all frequencies more than X megahertz from the channel edge, where X is the greater of 6 megahertz or the actual emission bandwidth as defined in paragraph (m)(6) of this section. In addition, the attenuation factor shall not be less that 43 + 10 log (P) dB on all frequencies between 2490.5 MHz and 2496 MHz and 55 + 10 log (P) dB at or below 2490.5 MHz. Mobile Satellite Service licensees operating on frequencies below 2495 MHz may also submit a documented interference complaint against BRS licensees operating on channel BRS Channel 1 on the same terms and conditions as adjacent channel BRS or EBS licensees.

Measurement procedure. Compliance with these rules is based on the use of measurement nstrumentation employing a resolution bandwidth of 1 megahertz or greater. However, in the 1 MHz bands immediately outside and adjacent to the frequency block a resolution bandwidth of at least one percent of the emission bandwidth of the fundamental emission of the transmitter may be employed; for mobile digital stations, in the 1 megahertz bands immediately outside and adjacent to the frequency block a resolution bandwidth of at least two percent may be employed, except when the 1 megahertz band is 2495-2496 MHz, in which case a resolution bandwidth of at least one percent may be employed. A narrower resolution bandwidth is permitted in all cases to improve measurement accuracy provided the measured power is integrated over the full required measurement bandwidth (i.e. 1 megahertz or 1 percent of emission bandwidth, as specified; or 1 megahertz or 2 percent for mobile digital stations, except in the band 2495-2496 MHz). The emission bandwidth is defined as the width of the signal between two points, one below the carrier center frequency and one above the carrier center frequency, outside of which all emissions are attenuated at least 26 dB below the transmitter power. With respect to television operations, measurements must be

Unless otherwise stated the results shown in this test report refer only to the sample(s) tested and such sample(s) are retained for 90 days only.
除非另有說明，此報告結果僅對測試之樣品負責，同時此樣品僅保留90天。本報告未經本公司書面許可，不可部份複製。
This document is issued by the Company subject to its General Conditions of Service printed overleaf, available on request or accessible at http://www.sgs.com.tw/Terms-and-Conditions and for electronic format documents, subject to Terms and Conditions for Electronic Documents at http://www.sgs.com.tw/Terms-and-Conditions. Attention is drawn to the limitation of liability, indemnification and jurisdiction issues defined therein. Any holder of this document is advised that information contained hereon reflects the Company's findings at the time of its intervention only and within the limits of Client's instructions, if any. The Company's sole responsibility is to its Client and this document does not exonerate parties to a transaction from exercising all their rights and obligations under the transaction documents. This document cannot be reproduced except in full, without prior written approval of the Company. Any unauthorized alteration, forgery or falsification of the content or appearance of this document is unlawful and offenders may be prosecuted to the fullest extent of the law.

made of the separate visual and aural operating powers at sufficiently frequent intervals to ensure compliance with the rules.

ISED RSS-195 §5.6

The power of any emission outside the frequency range(s) in which the equipment operates shall be attenuated below the transmitter power, P(dBW), by the amount indicated in Table 2, where p is the transmitter output power measured in watts.

Table 2 — Unwanted Emissions for Mobile, Portable and Low-Power Fixed Subscriber Equipment			
Frequency (MHz)	**Attenuation (dB)**	**Frequency (MHz)**	**Attenuation (dB)**
<2200	43 + 10 $\log_{10}$(p)	2324 - 2328	61 + 10 $\log_{10}$(p)
2200 - 2288	70 + 10 $\log_{10}$(p)	2328 - 2337	67 + 10 $\log_{10}$(p)
2288 - 2292	67 + 10 $\log_{10}$(p)	2337 - 2341	61 + 10 $\log_{10}$(p)
2292 - 2296	61 + 10 $\log_{10}$(p)	2341 - 2345	55 + 10 $\log_{10}$(p)
2296 - 2300	55 + 10 $\log_{10}$(p)	2345 - 2360	43 + 10 log10(p) FootnoteNote
2300 - 2305	43 + 10 $\log_{10}$(p)	2360 - 2365	43 + 10 $\log_{10}$(p)
2305 - 2320	43 + 10 log10(p) FootnoteNote	2365 - 2395	70 + 10 $\log_{10}$(p)
2320 - 2324	55 + 10 $\log_{10}$(p)	>2395	43 + 10 $\log_{10}$(p)
Note -- Mobile and portable equipment are prohibited from transmitting in the bands 2315-2320 MHz and 2345-2350 MHz. In addition, mobile and portable equipment employing FDD technology shall be restricted to transmitting in the band 2305-2315 MHz.			

RSS-199 §5.6

For the unwanted emission limits, in the 1 MHz band immediately outside and adjacent to the frequency block group, the power shall be measured with a resolution bandwidth of at least 1% of the occupied bandwidth for fixed stations, base stations, and fixed subscriber equipment, and 2% for subscriber equipment other than fixed subscriber equipment. Beyond this 1 MHz band, a resolution bandwidth of 1 MHz shall be used. A narrower resolution bandwidth can be used, provided that the measured power is integrated over the full required measurement bandwidth of 1 MHz, or 1% or 2% of the occupied bandwidth, as applicable.

For all equipment, the TRP or total conducted power (sum of conducted power across all antenna connectors), where applicable, of the unwanted emissions outside the frequency block or frequency block group shall not exceed the limits shown in the tables below.

Table 5: Unwanted emission limits for subscriber equipment other than fixed subscriber equipment

Offset from the edge of the frequency block or frequency block group (MHz)	Unwanted emission limits
0-1	-10 dBm/(2% of OB*)
1-5	-10 dBm/MHz
5-X**	-13 dBm/MHz
≥ X	-25 dBm/MHz

*OB is the occupied bandwidth

** X is 6 MHz or the equipment occupied bandwidth, whichever is greater

Unless otherwise stated the results shown in this test report refer only to the sample(s) tested and such sample(s) are retained for 90 days only.
除非另有說明，此報告結果僅對測試之樣品負責，同時此樣品僅保留90天。本報告未經本公司書面許可，不可部份複製。
This document is issued by the Company subject to its General Conditions of Service printed overleaf, available on request or accessible at http://www.sgs.com.tw/Terms-and-Conditions and for electronic format documents, subject to Terms and Conditions for Electronic Documents at http://www.sgs.com.tw/Terms-and-Conditions. Attention is drawn to the limitation of liability, indemnification and jurisdiction issues defined therein. Any holder of this document is advised that information contained hereon reflects the Company's findings at the time of its intervention only and within the limits of Client's instructions, if any. The Company's sole responsibility is to its Client and this document does not exonerate parties to a transaction from exercising all their rights and obligations under the transaction documents. This document cannot be reproduced except in full, without prior written approval of the Company. Any unauthorized alteration, forgery or falsification of the content or appearance of this document is unlawful and offenders may be prosecuted to the fullest extent of the law.

In addition to complying with the limits in table 5, subscriber equipment other than fixed subscriber equipment shall not exceed -13 dBm/MHz on all frequencies between 2490.5 MHz and 2496 MHz, and -25 dBm/MHz at or below 2490.5 MHz.

FCC §90.543 (e)

For operations in the 758-768 MHz and the 788-798 MHz bands, the power of any emission outside the licensee's frequency band(s) of operation shall be attenuated below the transmitter power (P) within the licensed band(s) of operation, measured in watts, in accordance with the following:

(1) On all frequencies between 769-775 MHz and 799-805 MHz, by a factor not less than 76 + 10 log (P) dB in a 6.25 kHz band segment, for base and fixed stations.

(2) On all frequencies between 769-775 MHz and 799-805 MHz, by a factor not less than 65 + 10 log (P) dB in a 6.25 kHz band segment, for mobile and portable stations.

(3) On any frequency between 775-788 MHz, above 805 MHz, and below 758 MHz, by at least 43 + 10 log (P) dB.

FCC §90.691 Emission mask requirements for EA-based systems

(a) Out-of-band emission requirement shall apply only to the “outer” channels included in an EA license and to spectrum adjacent to interior channels used by incumbent licensees. The emission limits are as follows:

(1) For any frequency removed from the EA licensee's frequency block by up to and including 37.5 kHz, the power of any emission shall be attenuated below the transmitter power (P) in watts by at least 116 Log10(f/6.1) decibels or 50 + 10 Log10(P) decibels or 80 decibels, whichever is the lesser attenuation, where f is the frequency removed from the center of the outer channel in the block in kilohertz and where f is greater than 12.5 kHz.

(2) For any frequency removed from the EA licensee's frequency block greater than 37.5 kHz, the power of any emission shall be attenuated below the transmitter power (P) in watts by at least 43 + 10Log10(P) decibels or 80 decibels, whichever is the lesser attenuation, where f is the frequency removed from the center of the outer channel in the block in kilohertz and where f is greater than 37.5 kHz.

7.4 Field Strength Of Spurious Radiation Measurement

According to FCC §2.1053,

FCC §22.917(a), §24.238(a), §27.53(h), §90.543(e)(3)
RSS-130 §4.7, RSS-132 §5.5, RSS-133 §5.6, RSS-139 §5.6, RSS-140 §4.4, RSS-195 §5.6, RSS-199 §5.6

Out of band emissions.The power of any emission outside of the authorized operating frequency ranges must be attenuated below the transmitting power (P) by a factor of at least 43 + 10 log(P) dB.

FCC §27.53(a)

For operations in the 2305-2320 MHz band and the 2345-2360 MHz band, the power of any emission outside a licensee's frequency band(s) of operation shall be attenuated below the transmitter power P (with averaging performed only during periods of transmission) within the licensed band(s) of operation, in watts, by the following amounts:

(4) For mobile and portable stations operating in the 2305-2315 MHz and 2350-2360 MHz bands:

(ii) By a factor of not less than 70 + 10 log (P) dB below 2288 MHz;

(iii) By a factor of not less than 70 + 10 log (P) dB above 2365 MHz.

Unless otherwise stated the results shown in this test report refer only to the sample(s) tested and such sample(s) are retained for 90 days only.
除非另有說明，此報告結果僅對測試之樣品負責，同時此樣品僅保留90天。本報告未經本公司書面許可，不可部份複製。
This document is issued by the Company subject to its General Conditions of Service printed overleaf, available on request or accessible at http://www.sgs.com.tw/Terms-and-Conditions and for electronic format documents, subject to Terms and Conditions for Electronic Documents at http://www.sgs.com.tw/Terms-and-Conditions. Attention is drawn to the limitation of liability, indemnification and jurisdiction issues defined therein. Any holder of this document is advised that information contained hereon reflects the Company’s findings at the time of its intervention only and within the limits of Client’s instructions, if any. The Company’s sole responsibility is to its Client and this document does not exonerate parties to a transaction from exercising all their rights and obligations under the transaction documents. This document cannot be reproduced except in full, without prior written approval of the Company. Any unauthorized alteration, forgery or falsification of the content or appearance of this document is unlawful and offenders may be prosecuted to the fullest extent of the law.

FCC §27.53(g)

Compliance for operations in the 600 MHz, 698-746 MHz, 746-758 MHz and the 776-788 MHz band with this provision is based on the use of measurement instrumentation employing a resolution bandwidth of 100 kilohertz or greater. However, in the 100 kilohertz bands immediately outside and adjacent to a licensee's frequency block, a resolution bandwidth of at least 30 kHz may be employed.

(2) On any frequency outside the 776-788 MHz band, the power of any emission shall be attenuated outside the band below the transmitter power (P) by at least 43 + 10 log (P) dB;

(3) On all frequencies between 763-775 MHz and 793-805 MHz, by a factor not less than 76 + 10 log (P) dB in a 6.25 kHz band segment, for base and fixed stations;

(4) On all frequencies between 763-775 MHz and 793-805 MHz, by a factor not less than 65 + 10 log (P) dB in a 6.25 kHz band segment, for mobile and portable stations;

FCC §90.543 (f)

For operations in the 758-775 MHz and 788-805 MHz bands, all emissions including harmonics in the band 1559-1610 MHz shall be limited to −70 dBW/MHz equivalent isotropically radiated power (EIRP) for wideband signals, and −80 dBW EIRP for discrete emissions of less than 700 Hz bandwidth. For the purpose of equipment authorization, a transmitter shall be tested with an antenna that is representative of the type that will be used with the equipment in normal operation.

FCC §27.53(h)(1)

(h) *AWS emission limits*—(1) *General protection levels.* Except as otherwise specified below, for operations in the 1695-1710 MHz, 1710-1755 MHz, 1755-1780 MHz, 1915-1920 MHz, 1995-2000 MHz, 2000-2020 MHz, 2110-2155 MHz, 2155-2180 MHz, and 2180-2200 bands, the power of any emission outside a licensee's frequency block shall be attenuated below the transmitter power (P) in watts by at least 43 + 10 $\log_{10}$ (P) dB.

FCC §27.53(m) (4) (6)

For mobile digital stations, the attenuation factor shall be not less than 40 + 10 log (P) dB on all frequencies between the channel edge and 5 megahertz from the channel edge, 43 + 10 log (P) dB on all frequencies between 5 megahertz and X megahertz from the channel edge, and 55 + 10 log (P) dB on all frequencies more than X megahertz from the channel edge, where X is the greater of 6 megahertz or the actual emission bandwidth as defined in paragraph (m)(6) of this section. In addition, the attenuation factor shall not be less that 43 + 10 log (P) dB on all frequencies between 2490.5 MHz and 2496 MHz and 55 + 10 log (P) dB at or below 2490.5 MHz. Mobile Satellite Service licensees operating on frequencies below 2495 MHz may also submit a documented interference complaint against BRS licensees operating on channel BRS Channel 1 on the same terms and conditions as adjacent channel BRS or EBS licensees.

Measurement procedure. Compliance with these rules is based on the use of measurement nstrumentation employing a resolution bandwidth of 1 megahertz or greater. However, in the 1 MHz bands immediately outside and adjacent to the frequency block a resolution bandwidth of at least one percent of the emission bandwidth of the fundamental emission of the transmitter may be employed; for mobile digital stations, in the 1 megahertz bands immediately outside and adjacent to the frequency block a resolution bandwidth of at least two percent may be employed, except when the 1 megahertz band is 2495-2496 MHz, in which case a resolution bandwidth of at least one percent may be employed. A narrower resolution bandwidth is permitted in all cases to improve measurement accuracy provided the measured power is integrated over the full required measurement bandwidth (i.e. 1 megahertz or 1 percent of emission bandwidth, as specified; or 1 megahertz or 2 percent for mobile digital stations, except in the band 2495-2496 MHz). The emission bandwidth is defined as the width of the signal between two points, one below the carrier center frequency and one above the carrier center frequency, outside of which all emissions are attenuated at least 26 dB below the transmitter power. With respect to television operations, measurements must be

Unless otherwise stated the results shown in this test report refer only to the sample(s) tested and such sample(s) are retained for 90 days only.
除非另有說明，此報告結果僅對測試之樣品負責，同時此樣品僅保留90天。本報告未經本公司書面許可，不可部份複製。
This document is issued by the Company subject to its General Conditions of Service printed overleaf, available on request or accessible at http://www.sgs.com.tw/Terms-and-Conditions and for electronic format documents, subject to Terms and Conditions for Electronic Documents at http://www.sgs.com.tw/Terms-and-Conditions. Attention is drawn to the limitation of liability, indemnification and jurisdiction issues defined therein. Any holder of this document is advised that information contained hereon reflects the Company's findings at the time of its intervention only and within the limits of Client's instructions, if any. The Company's sole responsibility is to its Client and this document does not exonerate parties to a transaction from exercising all their rights and obligations under the transaction documents. This document cannot be reproduced except in full, without prior written approval of the Company. Any unauthorized alteration, forgery or falsification of the content or appearance of this document is unlawful and offenders may be prosecuted to the fullest extent of the law.

made of the separate visual and aural operating powers at sufficiently frequent intervals to ensure compliance with the rules.

RSS-199 §5.6

For the unwanted emission limits, in the 1 MHz band immediately outside and adjacent to the frequency block group, the power shall be measured with a resolution bandwidth of at least 1% of the occupied bandwidth for fixed stations, base stations, and fixed subscriber equipment, and 2% for subscriber equipment other than fixed subscriber equipment. Beyond this 1 MHz band, a resolution bandwidth of 1 MHz shall be used. A narrower resolution bandwidth can be used, provided that the measured power is integrated over the full required measurement bandwidth of 1 MHz, or 1% or 2% of the occupied bandwidth, as applicable.

For all equipment, the TRP or total conducted power (sum of conducted power across all antenna connectors), where applicable, of the unwanted emissions outside the frequency block or frequency block group shall not exceed the limits shown in the tables below.

Table 5: Unwanted emission limits for subscriber equipment other than fixed subscriber equipment

Offset from the edge of the frequency block or frequency block group (MHz)	Unwanted emission limits
0-1	-10 dBm/(2% of OB*)
1-5	-10 dBm/MHz
5-X**	-13 dBm/MHz
≥ X	-25 dBm/MHz

*OB is the occupied bandwidth

** X is 6 MHz or the equipment occupied bandwidth, whichever is greater

In addition to complying with the limits in table 5, subscriber equipment other than fixed subscriber equipment shall not exceed -13 dBm/MHz on all frequencies between 2490.5 MHz and 2496 MHz, and -25 dBm/MHz at or below 2490.5 MHz.

FCC §90.691 Emission mask requirements for EA-based systems

(a) Out-of-band emission requirement shall apply only to the “outer” channels included in an EA license and to spectrum adjacent to interior channels used by incumbent licensees. The emission limits are as follows:

(1) For any frequency removed from the EA licensee's frequency block by up to and including 37.5 kHz, the power of any emission shall be attenuated below the transmitter power (P) in watts by at least 116 Log10(f/6.1) decibels or 50 + 10 Log10(P) decibels or 80 decibels, whichever is the lesser attenuation, where f is the frequency removed from the center of the outer channel in the block in kilohertz and where f is greater than 12.5 kHz.

(2) For any frequency removed from the EA licensee's frequency block greater than 37.5 kHz, the power of any emission shall be attenuated below the transmitter power (P) in watts by at least 43 + 10Log10(P) decibels or 80 decibels, whichever is the lesser attenuation, where f is the frequency removed from the center of the outer channel in the block in kilohertz and where f is greater than 37.5 kHz.

RSS-130 §4.7.1

Compliance for operations in the 617-652 MHz, 663-698 MHz, 698-756 MHz and the 777-787 MHz band, the unwanted emissions in any 100 kHz bandwidth on any frequency outside the low frequency edge and the high frequency edge of each frequency block range(s), shall be attenuated

Unless otherwise stated the results shown in this test report refer only to the sample(s) tested and such sample(s) are retained for 90 days only.
除非另有說明，此報告結果僅對測試之樣品負責，同時此樣品僅保留90天。本報告未經本公司書面許可，不可部份複製。
This document is issued by the Company subject to its General Conditions of Service printed overleaf, available on request or accessible at http://www.sgs.com.tw/Terms-and-Conditions and for electronic format documents, subject to Terms and Conditions for Electronic Documents at http://www.sgs.com.tw/Terms-and-Conditions. Attention is drawn to the limitation of liability, indemnification and jurisdiction issues defined therein. Any holder of this document is advised that information contained hereon reflects the Company’s findings at the time of its intervention only and within the limits of Client’s instructions, if any. The Company’s sole responsibility is to its Client and this document does not exonerate parties to a transaction from exercising all their rights and obligations under the transaction documents. This document cannot be reproduced except in full, without prior written approval of the Company. Any unauthorized alteration, forgery or falsification of the content or appearance of this document is unlawful and offenders may be prosecuted to the fullest extent of the law.

below the transmitter power, P (dBW), by at least 43 + 10 log10 p (watts), dB. However, in the 100 kHz band immediately outside of the equipment's frequency block range, a resolution bandwidth of 30 kHz may be employed.

RSS-130 §4.7.2

In addition to the limit outlined in section 4.7.1 above, equipment operating in the frequency bands 746-756 MHz and 777-787 MHz shall also comply with the following restrictions:
the power of any unwanted emissions in any 6.25 kHz bandwidth for all frequencies between 763-775 MHz and 793-806 MHz shall be attenuated below the transmitter power, P (dBW), by at least:

76 + 10 log10 p (watts), dB, for base and fixed equipment and
65 + 10 log10 p (watts), dB, for mobile and portable equipment

the e.i.r.p. in the band 1559-1610 MHz shall not exceed −70 dBW/MHz for wideband signal and −80 dBW for discrete emission with bandwidth less than 700 Hz.

RSS-132 §5.5

i. Equipment shall meet the unwanted emission limits specified below:

In the first 1.0 MHz band immediately outside and adjacent to each of the sub-bands specified in Section 5.1, the power of emissions per any 1% of the occupied bandwidth shall be attenuated below the transmitter output power P (dBW) by at least 43 + 10 log(p) dB.

ii. After the first 1.0 MHz immediately outside and adjacent to each of the sub-bands, the power of emissions in any 100 kHz bandwidth shall be attenuated below the transmitter output power P (dBW) by at least 43 + 10 log(p) dB. If the measurement is performed using 1% of the occupied bandwidth, power integration over 100 kHz is required.

p is the output power specified in watts.

RSS-133 §5.6

Unwanted emissions shall be measured in terms of average values while the transmitter is operating at the manufacturer's rated power and modulated as specified in RSS-Gen. Equipment shall meet the unwanted emission limits, specified in table 3, outside each frequency block group. For each channel bandwidth supported by the equipment under test, the unwanted emissions shall be measured and reported for two channel frequencies: one located as close as possible to the low end and one located as close as possible to the high end of the equipment's operating frequency range. For the unwanted emission limits, in the 1 MHz bands immediately outside and adjacent to the frequency block group, the power shall be measured with a resolution bandwidth of at least 1% of the occupied bandwidth (OBW). Beyond these 1 MHz bands, a resolution bandwidth of 1 MHz shall be used. A narrower resolution bandwidth may be used, provided that the Personal Communications Service Equipment Operating in the Bands 1850-1915 MHz and 1930-1995 MHz RSS-133 6 measured power is integrated over the full required measurement bandwidth of 1 MHz, or 1% of the OBW, as applicable. For all equipment, the TRP or total conducted power (sum of conducted power across all antenna connectors), where applicable, of the unwanted emissions outside the frequency block or frequency block group shall not exceed the limits shown in the table 3.

Table 3: Unwanted emission limits for all equipment

Unless otherwise stated the results shown in this test report refer only to the sample(s) tested and such sample(s) are retained for 90 days only.
除非另有說明，此報告結果僅對測試之樣品負責，同時此樣品僅保留90天。本報告未經本公司書面許可，不可部份複製。
This document is issued by the Company subject to its General Conditions of Service printed overleaf, available on request or accessible at http://www.sgs.com.tw/Terms-and-Conditions and for electronic format documents, subject to Terms and Conditions for Electronic Documents at http://www.sgs.com.tw/Terms-and-Conditions. Attention is drawn to the limitation of liability, indemnification and jurisdiction issues defined therein. Any holder of this document is advised that information contained hereon reflects the Company's findings at the time of its intervention only and within the limits of Client's instructions, if any. The Company's sole responsibility is to its Client and this document does not exonerate parties to a transaction from exercising all their rights and obligations under the transaction documents. This document cannot be reproduced except in full, without prior written approval of the Company. Any unauthorized alteration, forgery or falsification of the content or appearance of this document is unlawful and offenders may be prosecuted to the fullest extent of the law.

Offset frequency from the edge of the frequency block group (MHz)	Unwanted emission limits
≤1	-13 dBm/(1% of OB*)
>1 MHz	-13 dBm/MHz

RSS-140 §4.4

a. For any frequency between 769-775 MHz and 799-806 MHz:

i. 76 + 10 log (p), dB in a 6.25 kHz band for fixed and base station equipment

ii. 65 + 10 log (p), dB in a 6.25 kHz band for mobile and portable/hand-held equipment

b. For any frequency between 775-788 MHz, above 806 MHz, and below 758 MHz: 43 + 10 log (p), dB in a bandwidth of 100 kHz or greater. However, in the 100 kHz bands immediately outside and adjacent to the frequency bands 758-768 MHz and 788-798 MHz, a resolution bandwidth of 30 kHz may be employed.

RSS-195 §5.6

The power of any emission outside the frequency range(s) in which the equipment operates shall be attenuated below the transmitter power, P(dBW), by the amount indicated in Table 2, where p is the transmitter output power measured in watts.

Table 2 — Unwanted Emissions for Mobile, Portable and Low-Power Fixed Subscriber Equipment

Frequency (MHz)	Attenuation (dB)	Frequency (MHz)	Attenuation (dB)
<2200	43 + 10 $\log_{10}$(p)	2324 - 2328	61 + 10 $\log_{10}$(p)
2200 - 2288	70 + 10 $\log_{10}$(p)	2328 - 2337	67 + 10 $\log_{10}$(p)
2288 - 2292	67 + 10 $\log_{10}$(p)	2337 - 2341	61 + 10 $\log_{10}$(p)
2292 - 2296	61 + 10 $\log_{10}$(p)	2341 - 2345	55 + 10 $\log_{10}$(p)
2296 - 2300	55 + 10 $\log_{10}$(p)	2345 - 2360	43 + 10 log10(p) FootnoteNote
2300 - 2305	43 + 10 $\log_{10}$(p)	2360 - 2365	43 + 10 $\log_{10}$(p)
2305 - 2320	43 + 10 log10(p) FootnoteNote	2365 - 2395	70 + 10 $\log_{10}$(p)
2320 - 2324	55 + 10 $\log_{10}$(p)	>2395	43 + 10 $\log_{10}$(p)

Note -- Mobile and portable equipment are prohibited from transmitting in the bands 2315-2320 MHz and 2345-2350 MHz. In addition, mobile and portable equipment employing FDD technology shall be restricted to transmitting in the band 2305-2315 MHz.

7.5 Frequency Stability Measurement

The frequency stability shall be sufficient to ensure that the fundamental emission stays within the authorized frequency block.

7.6 Peak to Average Ratio

The peak-to-average ratio (PAR) of the transmission may not exceed 13dB.

Unless otherwise stated the results shown in this test report refer only to the sample(s) tested and such sample(s) are retained for 90 days only.
除非另有說明，此報告結果僅對測試之樣品負責，同時此樣品僅保留90天。本報告未經本公司書面許可，不可部份複製。
This document is issued by the Company subject to its General Conditions of Service printed overleaf, available on request or accessible at http://www.sgs.com.tw/Terms-and-Conditions and for electronic format documents, subject to Terms and Conditions for Electronic Documents at http://www.sgs.com.tw/Terms-and-Conditions. Attention is drawn to the limitation of liability, indemnification and jurisdiction issues defined therein. Any holder of this document is advised that information contained hereon reflects the Company's findings at the time of its intervention only and within the limits of Client's instructions, if any. The Company's sole responsibility is to its Client and this document does not exonerate parties to a transaction from exercising all their rights and obligations under the transaction documents. This document cannot be reproduced except in full, without prior written approval of the Company. Any unauthorized alteration, forgery or falsification of the content or appearance of this document is unlawful and offenders may be prosecuted to the fullest extent of the law.

8 TEST SETUP

8.1 Maximum Output Power

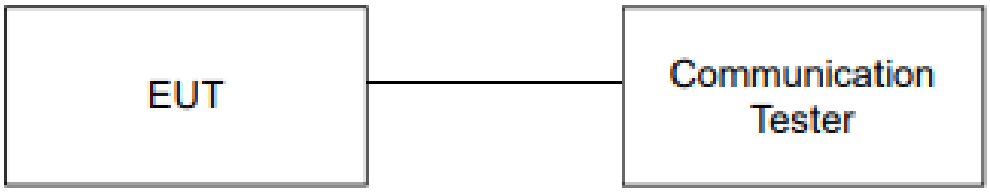

Note: *Measurement setup for testing on Antenna connector*

8.2 Occupied Bandwidth Measurement

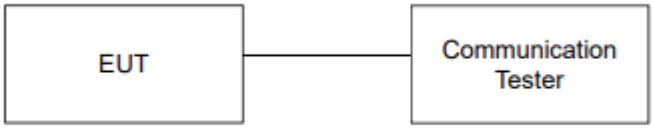

Note: *Measurement setup for testing on Antenna connector*

8.3 Out of Band Emission At Antenna Terminals

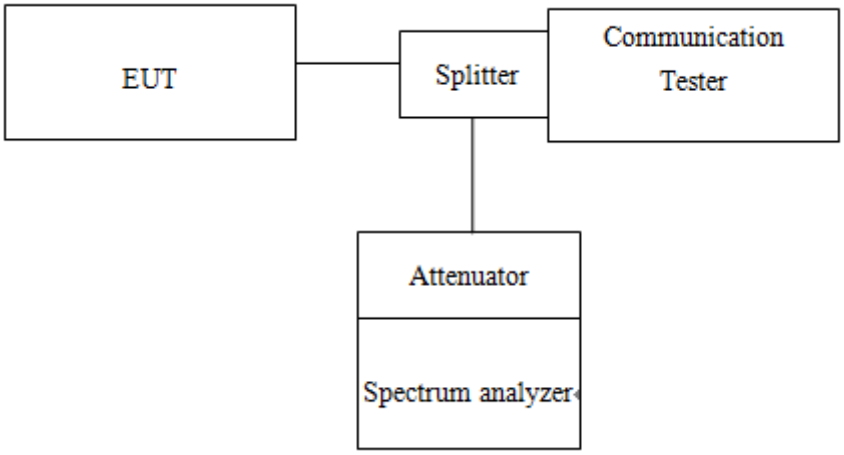

Unless otherwise stated the results shown in this test report refer only to the sample(s) tested and such sample(s) are retained for 90 days only.
除非另有說明，此報告結果僅對測試之樣品負責，同時此樣品僅保留90天。本報告未經本公司書面許可，不可部份複製。
This document is issued by the Company subject to its General Conditions of Service printed overleaf, available on request or accessible at http://www.sgs.com.tw/Terms-and-Conditions and for electronic format documents, subject to Terms and Conditions for Electronic Documents at http://www.sgs.com.tw/Terms-and-Conditions. Attention is drawn to the limitation of liability, indemnification and jurisdiction issues defined therein. Any holder of this document is advised that information contained hereon reflects the Company's findings at the time of its intervention only and within the limits of Client's instructions, if any. The Company's sole responsibility is to its Client and this document does not exonerate parties to a transaction from exercising all their rights and obligations under the transaction documents. This document cannot be reproduced except in full, without prior written approval of the Company. Any unauthorized alteration, forgery or falsification of the content or appearance of this document is unlawful and offenders may be prosecuted to the fullest extent of the law.

8.4 Field Strength of Spurious Radiation Measurement

Radiated Emission Test Set-Up, Frequency From 30MHz to 1000MHz.

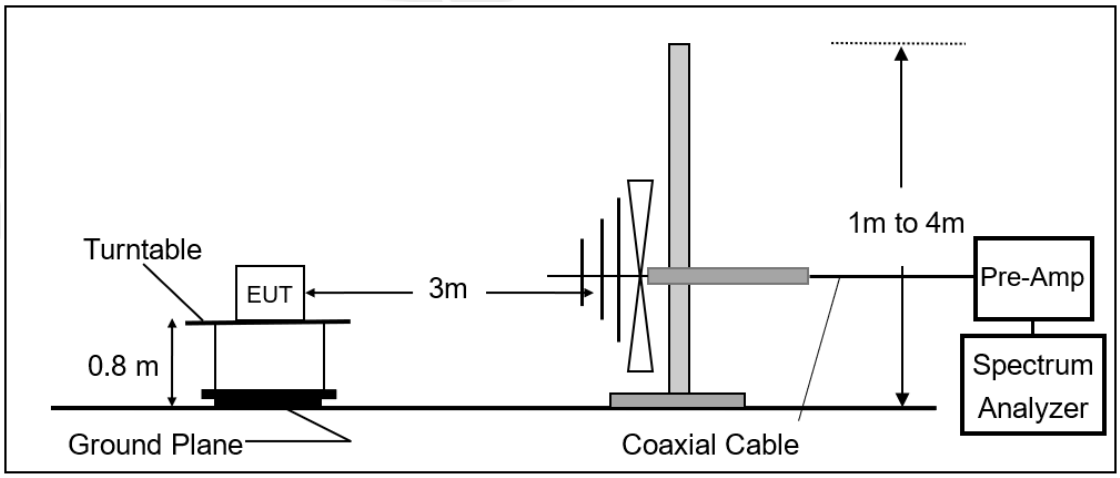

Radiated Emission Test Set-Up, Frequency Above 1GHz.

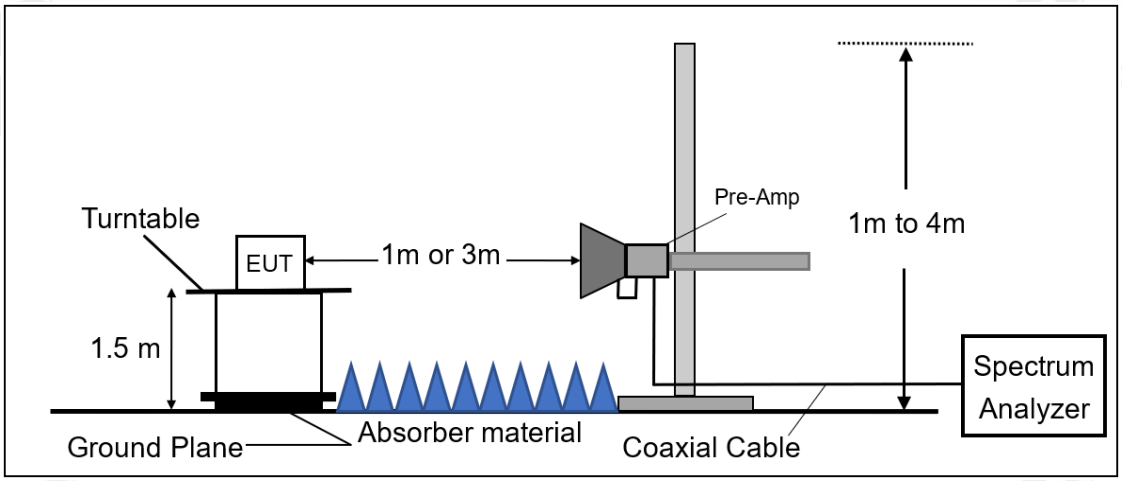

Unless otherwise stated the results shown in this test report refer only to the sample(s) tested and such sample(s) are retained for 90 days only.
除非另有說明，此報告結果僅對測試之樣品負責，同時此樣品僅保留90天。本報告未經本公司書面許可，不可部份複製。
This document is issued by the Company subject to its General Conditions of Service printed overleaf, available on request or accessible at http://www.sgs.com.tw/Terms-and-Conditions and for electronic format documents, subject to Terms and Conditions for Electronic Documents at http://www.sgs.com.tw/Terms-and-Conditions. Attention is drawn to the limitation of liability, indemnification and jurisdiction issues defined therein. Any holder of this document is advised that information contained hereon reflects the Company's findings at the time of its intervention only and within the limits of Client's instructions, if any. The Company's sole responsibility is to its Client and this document does not exonerate parties to a transaction from exercising all their rights and obligations under the transaction documents. This document cannot be reproduced except in full, without prior written approval of the Company. Any unauthorized alteration, forgery or falsification of the content or appearance of this document is unlawful and offenders may be prosecuted to the fullest extent of the law.

8.5 Frequency Stability Measurement

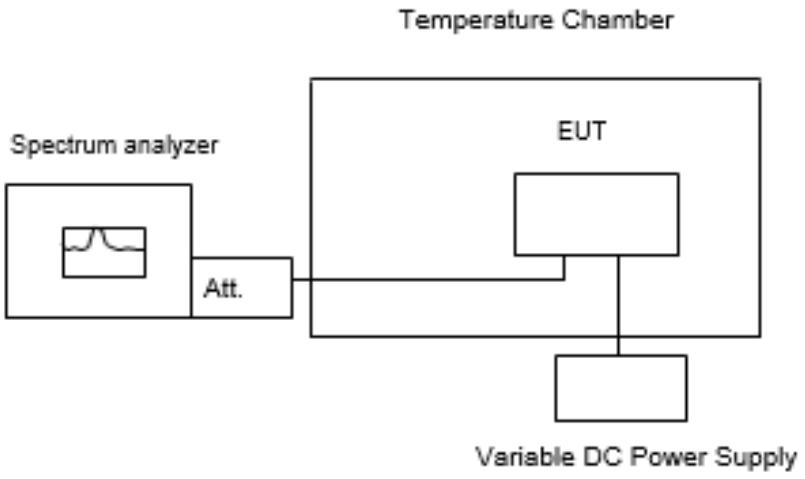

Note: *Measurement setup for testing on Antenna connector*

8.6 Peak To Average Ratio

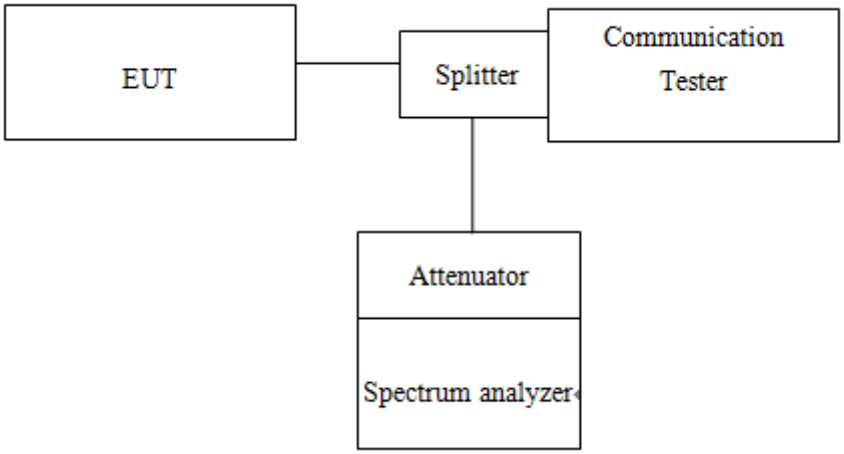

Unless otherwise stated the results shown in this test report refer only to the sample(s) tested and such sample(s) are retained for 90 days only.
除非另有說明，此報告結果僅對測試之樣品負責，同時此樣品僅保留90天。本報告未經本公司書面許可，不可部份複製。
This document is issued by the Company subject to its General Conditions of Service printed overleaf, available on request or accessible at http://www.sgs.com.tw/Terms-and-Conditions and for electronic format documents, subject to Terms and Conditions for Electronic Documents at http://www.sgs.com.tw/Terms-and-Conditions. Attention is drawn to the limitation of liability, indemnification and jurisdiction issues defined therein. Any holder of this document is advised that information contained hereon reflects the Company's findings at the time of its intervention only and within the limits of Client's instructions, if any. The Company's sole responsibility is to its Client and this document does not exonerate parties to a transaction from exercising all their rights and obligations under the transaction documents. This document cannot be reproduced except in full, without prior written approval of the Company. Any unauthorized alteration, forgery or falsification of the content or appearance of this document is unlawful and offenders may be prosecuted to the fullest extent of the law.

9 TEST PROCEDURE

9.1 Maximum Output Power

9.1.1 Output Power Measurement Applicable Guideance

The transmitter output was connected to a communication tester. Transmitter output was read off the communication tester in dBm. The power output at the transmitter antenna port was determined by the communication tester reading.
KDB 971168 D01 Power Meas License Digital System as the supplemental test methodology to adjust the proper setting obtaining the measurement results.
All LTE bands conducted average power is obtained from the simulator telecommunication test set.

9.1.2 Determining ERP and/or EIRP from conducted RF output power measurements

According to KDB 412172 D01 Power Approach,

$EIRP = P_T + G_T - L_C$,

$ERP = EIRP - 2.15$,

Where:

ERP or EIRP = effective radiated power or equivalent isotropically radiated power (expressed in the same units as PT, typically dBW, dBm, or power spectral density (PSD)2), relative to either a dipole antenna (ERP) or an isotropic antenna (EIRP);

P_T = transmitter output power, expressed in dBW, dBm, or PSD;

G_T = gain of the transmitting antenna, in dBd (ERP) or dBi (EIRP);

L_C = signal attenuation in the connecting cable between the transmitter and antenna, in dB.

9.2 Occupied Bandwidth Measurement

99% &26dB Bandwidth with detector peak

The EUT's output RF connector was connected with a short cable to the spectrum analyzer, RBW was set to about 1% of emission BW, VBW= 3 times RBW, -26dBc display line was placed on the screen (or 26dB bandwidth), the occupied bandwidth is the delta frequency between the two points where the display line intersects the signal trace. Then set RBW to 99% bandwidth, RBW= 1% ~ 5%, VBW ≥ 3 * RBW, with span > 2 * Signal BW, set % Power = 99%.

Unless otherwise stated the results shown in this test report refer only to the sample(s) tested and such sample(s) are retained for 90 days only.
除非另有說明，此報告結果僅對測試之樣品負責，同時此樣品僅保留90天。本報告未經本公司書面許可，不可部份複製。
This document is issued by the Company subject to its General Conditions of Service printed overleaf, available on request or accessible at http://www.sgs.com.tw/Terms-and-Conditions and for electronic format documents, subject to Terms and Conditions for Electronic Documents at http://www.sgs.com.tw/Terms-and-Conditions. Attention is drawn to the limitation of liability, indemnification and jurisdiction issues defined therein. Any holder of this document is advised that information contained hereon reflects the Company's findings at the time of its intervention only and within the limits of Client's instructions, if any. The Company's sole responsibility is to its Client and this document does not exonerate parties to a transaction from exercising all their rights and obligations under the transaction documents. This document cannot be reproduced except in full, without prior written approval of the Company. Any unauthorized alteration, forgery or falsification of the content or appearance of this document is unlawful and offenders may be prosecuted to the fullest extent of the law.

9.3 Out of Band Emission at Antenna Terminals

9.3.1 Conducted Emission

The RF output of the transceiver was connected to a spectrum analyzer through appropriate attenuation The resolution bandwidth of the spectrum analyzer was set at 1MHz, sufficient scans were taken to show the out of band Emissions if any up to 10th harmonic.

1. To connect Antenna Port of EUT to Spectrum.
2. Set RBW = 1MHz & VBW = 1MHz on Spectrum.
3. Allow trace to fully stabilize
4. Repeat above procedures until all default test channel measured were complete.

9.3.2 Band Edge

1. To connect Antenna Port of EUT to Spectrum.
2. The band edge of low and high channels for the highest RF powers was measured. Setting RBW ≥ 1% EBW.
3. Allow trace to fully stabilize
4. Repeat above procedures until all default test channel measured were complete.

9.4 Field Strength of Spurious Radiation Measurement

The EUT was placed on a non-conductive; the measurement antenna was placed at a distance of 3 meters from the EUT. During the tests, the antenna height and the EUT azimuth were varied in order to identify the maximum level of emissions from the EUT. This maximization process was repeated with the EUT positioned in each of its three orthogonal orientations.

The frequency range up to tenth harmonic was investigated for each of three fundamental frequencies (low, middle and high channels). Once spurious emission was identified, the power of the emission was determined using the substitution method.

The spurious emissions attenuation was calculated as the difference between radiated power at the fundamental frequency and the spurious emissions frequency.

ERP (dBm) = SG Level(dBm) + Antenna Gain(dBd) + Cable Loss(dB)

EIRP (dBm) = SG Level(dBm) + Antenna Gain(dBi) + Cable Loss(dB)

9.5 Frequency Stability Measurement

The equipment under test was connected to an external AC or DC power supply and input rated voltage. RF output was connected to a frequency counter or spectrum analyzer via feed through attenuators. The EUT was placed inside the temperature chamber. Set the spectrum analyzer RBW low enough to obtain the desired frequency resolution and measure EUT 20°C operating frequency as reference frequency. Turn EUT off and set the chamber temperature to –30°C. After the temperature stabilized for approximately 30 minutes recorded the frequency. Repeat step measure with 10°C increased per stage until the highest temperature of +50°C reached.

Unless otherwise stated the results shown in this test report refer only to the sample(s) tested and such sample(s) are retained for 90 days only.
除非另有說明，此報告結果僅對測試之樣品負責，同時此樣品僅保留90天。本報告未經本公司書面許可，不可部份複製。
This document is issued by the Company subject to its General Conditions of Service printed overleaf, available on request or accessible at http://www.sgs.com.tw/Terms-and-Conditions and for electronic format documents, subject to Terms and Conditions for Electronic Documents at http://www.sgs.com.tw/Terms-and-Conditions. Attention is drawn to the limitation of liability, indemnification and jurisdiction issues defined therein. Any holder of this document is advised that information contained hereon reflects the Company's findings at the time of its intervention only and within the limits of Client's instructions, if any. The Company's sole responsibility is to its Client and this document does not exonerate parties to a transaction from exercising all their rights and obligations under the transaction documents. This document cannot be reproduced except in full, without prior written approval of the Company. Any unauthorized alteration, forgery or falsification of the content or appearance of this document is unlawful and offenders may be prosecuted to the fullest extent of the law.

Set chamber temperature to 20℃. Use a variable AC power supply / DC power source to power the EUT and set the voltage to rated voltage. Set the spectrum analyzer RBW low enough to obtain the desired frequency resolution and recorded the frequency.
Reduce the input voltage to specify extreme voltage variation (+/- 15%) and endpoint as declared by the manufacturer, record the maximum frequency change.

9.6 Peak to Average Ratio

1. KDB 971168 D01 is employed as the following procedure is proper adjusted accordingly:
2. Set resolution/measurement bandwidth ≥ signal's occupied bandwidth; & internal =1ms
3. Set the number of counts to a value that stabilizes the measured CCDF curve.

Unless otherwise stated the results shown in this test report refer only to the sample(s) tested and such sample(s) are retained for 90 days only.
除非另有說明，此報告結果僅對測試之樣品負責，同時此樣品僅保留90天。本報告未經本公司書面許可，不可部份複製。
This document is issued by the Company subject to its General Conditions of Service printed overleaf, available on request or accessible at http://www.sgs.com.tw/Terms-and-Conditions and for electronic format documents, subject to Terms and Conditions for Electronic Documents at http://www.sgs.com.tw/Terms-and-Conditions. Attention is drawn to the limitation of liability, indemnification and jurisdiction issues defined therein. Any holder of this document is advised that information contained hereon reflects the Company's findings at the time of its intervention only and within the limits of Client's instructions, if any. The Company's sole responsibility is to its Client and this document does not exonerate parties to a transaction from exercising all their rights and obligations under the transaction documents. This document cannot be reproduced except in full, without prior written approval of the Company. Any unauthorized alteration, forgery or falsification of the content or appearance of this document is unlawful and offenders may be prosecuted to the fullest extent of the law.

10 MEASUREMENT RESULTS

Please refer to the Annex A-Measurement Results.

~ End of Report ~

Unless otherwise stated the results shown in this test report refer only to the sample(s) tested and such sample(s) are retained for 90 days only.
除非另有說明，此報告結果僅對測試之樣品負責，同時此樣品僅保留90天。本報告未經本公司書面許可，不可部份複製。
This document is issued by the Company subject to its General Conditions of Service printed overleaf, available on request or accessible at http://www.sgs.com.tw/Terms-and-Conditions and for electronic format documents, subject to Terms and Conditions for Electronic Documents at http://www.sgs.com.tw/Terms-and-Conditions. Attention is drawn to the limitation of liability, indemnification and jurisdiction issues defined therein. Any holder of this document is advised that information contained hereon reflects the Company's findings at the time of its intervention only and within the limits of Client's instructions, if any. The Company's sole responsibility is to its Client and this document does not exonerate parties to a transaction from exercising all their rights and obligations under the transaction documents. This document cannot be reproduced except in full, without prior written approval of the Company. Any unauthorized alteration, forgery or falsification of the content or appearance of this document is unlawful and offenders may be prosecuted to the fullest extent of the law.