User Guide

© Copyright 2016 HP Development Company, L.P.

Bluetooth is a trademark owned by its proprietor and used by HP Inc. under license. Intel is a trademark of Intel Corporation in the U.S. and other countries.Microsoft and Windows are trademarks of the Microsoft group of companies.

The information contained herein is subject to change without notice. The only warranties for HP products and services are set forth in the express warranty statements accompanying such products and services. Nothing herein should be construed as constituting an additional warranty. HP shall not be liable for technical or editorial errors or omissions contained herein.

First Edition: January 2016

Document Part Number: 839795-001

Product notice

This user guide describes features that are common to most models. Some features may not be available on your tablet.

Not all features are available in all editions of Windows. This tablet may require upgraded and/or separately purchased hardware, drivers and/or software to take full advantage of Windows functionality. Go to http://www.microsoft.com for details.

To access the latest user guide, go to http://www.hp.com/support, and select your country. Select **Drivers & Downloads**, and then follow the on-screen instructions.

Software terms

By installing, copying, downloading, or otherwise using any software product preinstalled on this tablet, you agree to be bound by the terms of the HP End User License Agreement (EULA). If you do not accept these license terms, your sole remedy is to return the entire unused product (hardware and software) within 14 days for a full refund, subject to the refund policy of your seller.

For any further information or to request a full refund of the price of the tablet, please contact your seller.

Safety warning notice

⚠ **WARNING!** To reduce the possibility of heat-related injuries or of overheating the tablet, do not place the tablet directly on your lap. Do not allow another hard surface, such as an adjoining optional printer, or a soft surface, such as pillows or rugs or clothing, to block airflow. Also, do not allow the AC adapter to come into contact with the skin or a soft surface, such as pillows or rugs or clothing, during operation. The tablet and the AC adapter comply with the user-accessible surface temperature limits defined by the International Standard for Safety of Information Technology Equipment (IEC 60950-1).

Table of contents

1 Welcome 1

Finding information 2

2 Components 3

Locating hardware 3

Locating software 3

Tablet edge components 4

Display 7

Back 8

Using the kickstand 9

Keyboard base components (select products only) 10

TouchPad 10

Lights 11

Special function keys 12

Using the hot keys 13

NFC and Smart Card (select products only) 14

Connecting the tablet to the keyboard base 15

Removing the keyboard base from the tablet 16

Labels 16

3 Network connections 18

Connecting to a wireless network 18

Using the wireless controls 18

Connecting to a WLAN 18

Using HP Mobile Broadband (select products only) 19

Using HP Mobile Connect (select products only) 20

Installing a micro SIM card (select products only) 20

Using GPS (select products only) 21

Using Bluetooth wireless devices (select products only) 21

Connecting Bluetooth devices 21

Sharing using NFC (select products only) 21

Connecting to an NFC device 22

Finding NFC apps 22

4 Screen navigation 23

Using the touch screen and TouchPad (select products only) gestures 23

Tap ... 23
Two-finger pinch zoom ... 23
One-finger slide (touch screen only) ... 24
Two-finger scroll (TouchPad only) ... 24
Two-finger tap (TouchPad only) ... 24
Four-finger tap (TouchPad only) ... 25
Three-finger swipe (TouchPad only) ... 25
Using an optional external keyboard ... 26
Using the tablet pen (select products only) ... 26
Identifying the pen components ... 27
Pairing the pen for use ... 27
Holding the pen ... 27
Storing the pen ... 27

5 Entertainment features ... 28
Using a webcam ... 28
Using audio ... 28
Adjusting the volume ... 28
Connecting speakers ... 28
Connecting headphones ... 29
Connecting headsets ... 29
Using sound settings ... 29
Using video ... 29

6 Power management ... 30
Shutting down (turning off) the tablet ... 30
Setting power options ... 30
Using power-saving states ... 30
Initiating and exiting Sleep ... 30
Enabling and exiting user-initiated Hibernation ... 31
Using the power meter and power settings ... 31
Setting password protection on wakeup ... 31
Using battery power ... 32
Finding additional battery information ... 32
Using HP Battery Check ... 32
Displaying the remaining battery charge ... 33
Maximizing battery discharge time ... 33
Managing low battery levels ... 33
Identifying low battery levels ... 33
Resolving a low battery level ... 34
Conserving battery power ... 34

Disposing of a battery 34
Replacing a battery 34
Using external AC power 34

7 MicroSD cards 36
Using the microSD card reader 36
Inserting a microSD card 36
Removing a microSD card 36

8 Security 38
Protecting the tablet 38
Using passwords 39
Setting passwords in Windows 39
Setting passwords in Computer Setup 40
Managing a BIOS administrator password 40
Entering a BIOS administrator password 41
Managing a Computer Setup DriveLock password (select products only) 42
Setting a DriveLock password 42
Enabling DriveLock (select products only) 43
Disabling DriveLock (select products only) 43
Entering a DriveLock password (select products only) 44
Changing a DriveLock password (select products only) 44
Using antivirus software 44
Using firewall software 44
Installing critical security updates 45
Using HP Client Security (select products only) 45
Using HP Touchpoint Manager (select products only) 45
Using an optional security cable 45
Using a fingerprint reader (select products only) 45
Locating the fingerprint reader 46

9 Maintenance 47
Updating programs and drivers 47
Cleaning your tablet 47
Cleaning procedures 48
Cleaning the display 48
Cleaning the sides or back 48
Traveling with or shipping your tablet 49

10 Backup and recovery 50
Creating recovery media and backups 50
Creating HP Recovery media (select products only) 50
Using Windows tools 51
Restore and recovery 52
Recovering using HP Recovery Manager 52
What you need to know before you get started 52
Using the HP Recovery partition (select products only) 53
Using HP Recovery media to recover 53
Changing the boot order 53
Removing the HP Recovery partition (select products only) 55

11 Computer Setup (BIOS), TPM, and HP Sure Start 56
Using Computer Setup 56
Starting Computer Setup 56
Navigating and selecting in Computer Setup 56
Restoring factory settings in Computer Setup 57
Updating the BIOS 58
Determining the BIOS version 58
Downloading a BIOS update 58
Changing the boot order using the f9 prompt 59
TPM BIOS settings (select products only) 59
Using HP Sure Start (select products only) 60

12 Using HP PC Hardware Diagnostics (UEFI) 61
Downloading HP PC Hardware Diagnostics (UEFI) to a USB device 61

13 Specifications 63
Input power 63
Operating environment 63

14 Electrostatic Discharge 64

15 Accessibility 65
Supported assistive technologies 65
Contacting support 65

Index 66

1 Welcome

After you set up and register the tablet, we recommend the following steps to get the most out of your smart investment:

- **Connect to the Internet**—Set up your wireless network so that you can connect to the Internet. For more information, see Network connections on page 18.
- **Update your antivirus software**—Protect your tablet from damage caused by viruses. The software may be preinstalled on the tablet. For more information, see Using antivirus software on page 44.
- **Get to know your tablet**—Learn about your tablet features. See Tablet edge components on page 4 and Screen navigation on page 23 for additional information.
- **Find installed software**—Access a list of the software preinstalled on the tablet:

  ▲ Select the **Start** button, and then select **All apps**.

  – or –

  Tap and hold the **Start** button, and then select **Programs and Features**.
- Back up your hard drive by creating a recovery flash drive. See Backup and recovery on page 50.

Finding information

To locate resources that provide product details, how-to information, and more, use this table.

Resource	Contents
Setup Instructions	• Overview of tablet setup and features
Get started app To access the Get started app: ▲ Select the **Start** button, and then select the **Get started** app.	• A broad range of how-to information and troubleshooting tips
HP support For U.S. support, go to http://www.hp.com/go/contactHP. For worldwide support, go to http://welcome.hp.com/country/us/en/wwcontact_us.html.	• Online chat with an HP technician • Support telephone numbers • HP service center locations
Safety & Comfort Guide To access this guide: ▲ Select the **Start** button, select **All apps**, select **HP Help and Support**, and then select **HP Documentation**. – or – Go to http://www.hp.com/ergo.	• Proper tablet setup • Guidelines for posture and work habits that increase your comfort and decrease your risk of injury • Electrical and mechanical safety information
Regulatory, Safety and Environmental Notices To access this document: ▲ Select the **Start** button, select **All apps**, select **HP Help and Support**, and then select **HP Documentation**.	• Important regulatory notices, including information about proper battery disposal, if needed.
*Limited Warranty** To access this document: ▲ Select the **Start** button, select **All apps**, select **HP Help and Support**, and then select **HP Documentation**. – or – Go to http://www.hp.com/go/orderdocuments.	• Specific warranty information about this tablet
*You can find your HP Limited Warranty located with the user guides on your product and/or on the CD or DVD provided in the box. In some countries or regions, HP may provide a printed warranty in the box. For countries or regions where the warranty is not provided in printed format, you can request a copy from http://www.hp.com/go/orderdocuments. For products purchased in Asia Pacific, you can write to HP at POD, PO Box 161, Kitchener Road Post Office, Singapore 912006. Include your product name, and your name, phone number, and postal address.	

2 Components

Locating hardware

To find out what hardware is installed on your tablet:

▲ Type `device manager` in the taskbar search box, and then select the **Device Manager** app.

A list displays all the devices installed on your tablet.

For information about system hardware components and the system BIOS version number, press fn+esc (select products only).

Locating software

To find out what software is installed on your tablet:

▲ Select the **Start** button, and then select **All apps**.

– or –

Tap and hold the **Start** button, and then select **Programs and Features**.

Tablet edge components

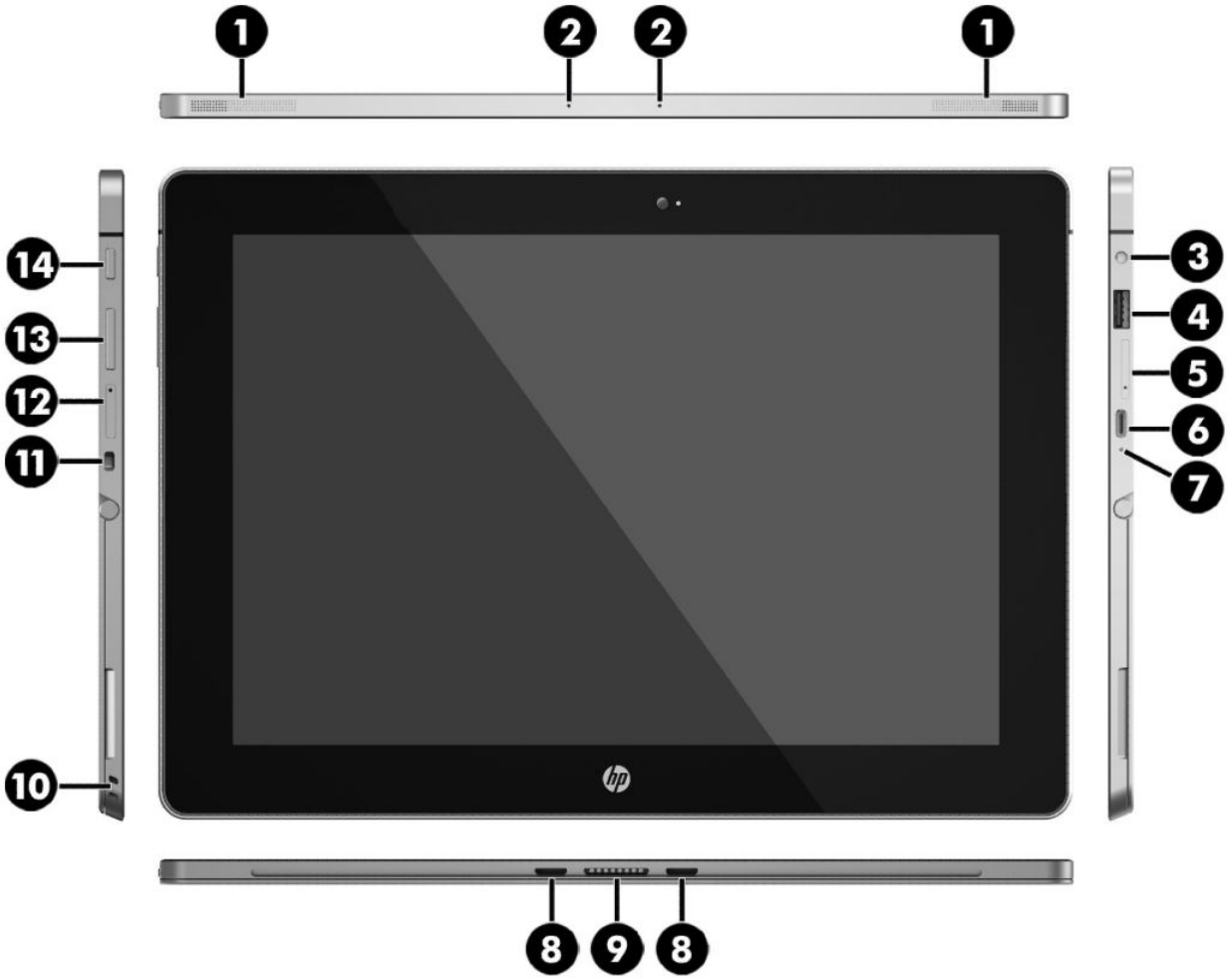

Component		Description
(1)	Speakers	Produce sound.
(2)	Internal microphones	Record sound.
(3)	Audio-out (headphone)/Audio-in (microphone) combo jack	Connects optional powered stereo speakers, headphones, earbuds, a headset, or a television audio cable. Also connects an optional headset microphone. This jack does not support optional microphone-only devices. **WARNING!** To reduce the risk of personal injury, adjust the volume before using headphones, earbuds, or a headset. For additional safety information, see the *Regulatory, Safety and Environmental Notices*. To access this guide: ▲ Select the **Start** button, select **All apps**, select **HP Help and Support**, and then select **HP Documentation**. **NOTE:** When a device is connected to the jack, the tablet speakers are disabled.

Component		Description
(4)	USB 3.0 charging (powered) port	Connects an optional USB device, such as a keyboard, mouse, external drive, printer, scanner or USB hub. Standard USB ports will not charge all USB devices or will charge using a low current. Some USB devices require power and require you to use a powered port. **NOTE:** USB charging ports can also charge select models of cell phones and MP3 players, even when the tablet is off.
(5)	MicroSD card reader	Reads microSD cards that store, manage, share, or access information. For installation instructions, see MicroSD cards on page 36.
(6)	USB Type-C (Thunderbolt-enabled) port	Connects an AC adapter and connects any USB device with a Type-C connector. Your tablet may also support a Thunderbolt docking station. **NOTE:** Some USB Type-C ports can charge select models of cell phones, laptops, tablets, and MP3 players, even when the tablet is off. Some can also connect DisplayPort, VGA, HDMI, Thunderbolt, and other video devices. **NOTE:** Adapters (purchased separately) may be required.
(7)	AC adapter and battery light	• White: The AC adapter is connected and the battery is fully charged. • Blinking white: The AC adapter is disconnected and the battery has reached a low battery level. • Amber: The AC adapter is connected and the battery is charging. • Off: The battery is not charging from this port.
(8)	Alignment post connectors (2)	Align and attach the tablet to the optional keyboard.
(9)	ZIF (Zero Insertion Force) expansion slot	Allows you to connect accessories such as a keyboard or power supply using the POGO pin connector.
(10)	Pen loop slots	Allow you to connect the pen to the tablet using the pen loop.
(11)	Security cable slot	Attaches an optional security cable to the tablet. **NOTE:** The security cable is designed to act as a deterrent, but it may not prevent the tablet from being mishandled or stolen.
(12)	Micro SIM card slot (select products only)	Supports a wireless subscriber identity module (SIM) card. If a SIM card was not preinstalled in your tablet, see Installing a micro SIM card (select products only) on page 20.
(13)	Volume button	Press to increase or decrease sound.
(14)	Power button	• When the tablet is off, press the button to turn on the tablet. • When the tablet is on, press the button briefly to initiate Sleep. • When the tablet is in the Sleep state, press the button briefly to exit Sleep. **CAUTION:** Pressing and holding down the power button results in the loss of unsaved information. **NOTE:** Although you can turn off the tablet with the power button, the recommended procedure is to use the Windows Shut down command.

Component	Description
	To learn more about your power settings, see your power options. ▲ Type `power` in the taskbar search box, and then select **Power and sleep settings**.

Display

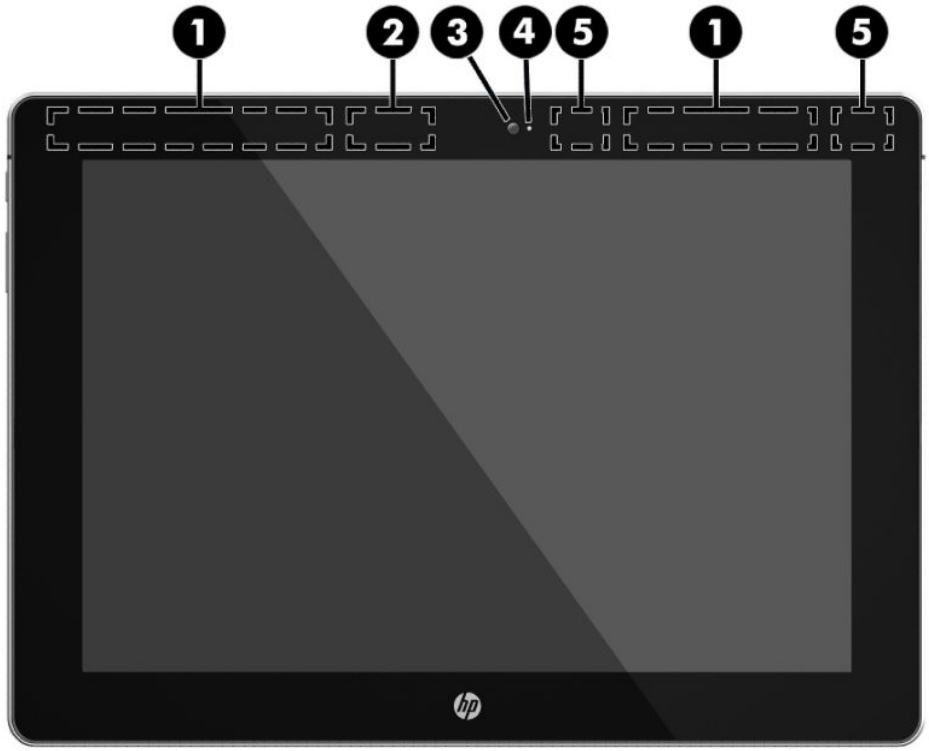

Component		Description
(1)	WWAN antennas* (select products only)	Send and receive wireless signals to communicate with wireless wide area networks (WWANs).
(2)	WiGig antenna*	Sends and receives wireless signals to the Wireless Dock (WiDock). The WiDock is a wireless gigabit (WiGig) device that connects the tablet to other wireless devices located within 0.6 m to 1.2 m (2 ft to 4 ft) of the WiDock.
(3)	Webcam	Records video and captures photographs. Some models allow you to video conference and chat online using streaming video. To use the webcam: ▲ Type `camera` in the taskbar search box, and then select **Camera**.
(4)	Webcam light	On: The webcam is in use.
(5)	WLAN antennas*	Send and receive wireless signals to communicate with wireless local area networks (WLANs).

*The antennas are not visible from the outside of the tablet. For optimal transmission, keep the areas immediately around the antennas free from obstructions.

For wireless regulatory notices, see the section of the *Regulatory, Safety, and Environmental Notices* that applies to your country or region.

To access this guide:

▲ Select the **Start** button, select **All apps**, select **HP Help and Support**, and then select **HP Documentation**.

Back

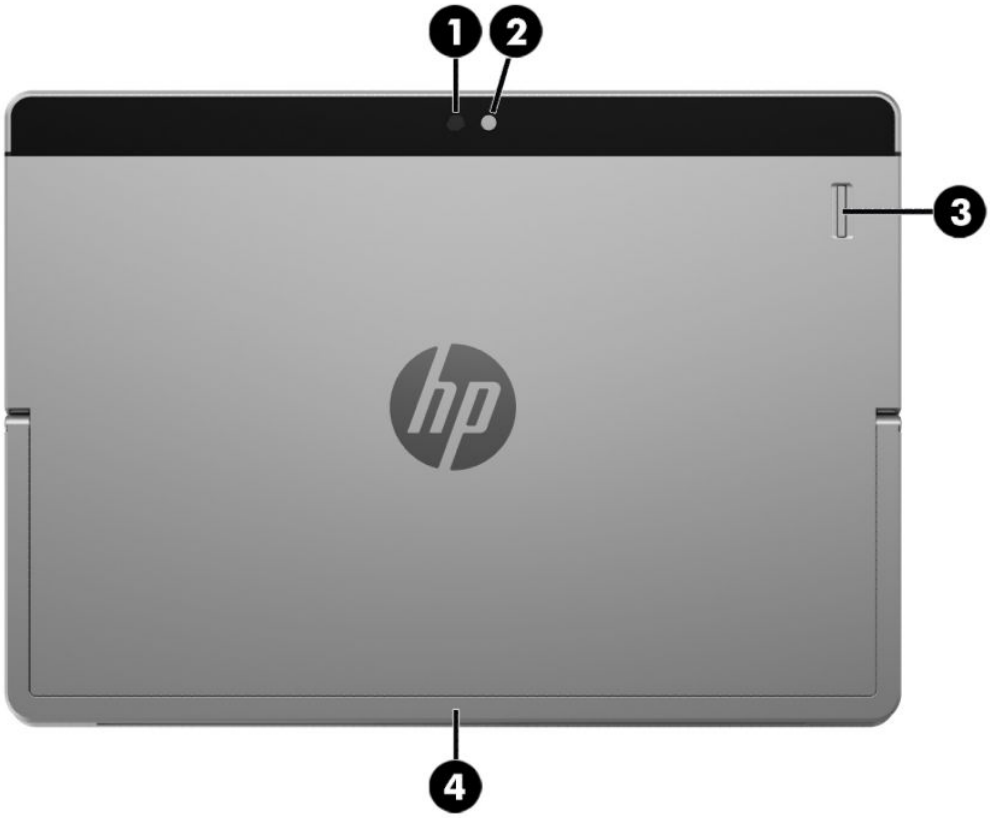

Component		Description
(1)	Camera flash	Provides a camera flash. You can control the flash using the Windows Metro Camera app.
(2)	Webcam (rear)	Records video and captures photographs. Some products allow you to video conference and chat online using streaming video.
(3)	Fingerprint reader (select products only)	Allows a fingerprint logon to Windows, instead of a password logon.
(4)	Kickstand	Provides stability and the best viewing angle.

Using the kickstand

To change the angle for the display, follow these steps:

1. Hold the tablet with top edge up (the speakers are on top).
2. Slide the kickstand away from the tablet and position the kickstand at the desired angle. The kickstand will hold at a midway point **(1)** of about 52 degrees or at full stopping point **(2)** of about 118 degrees.

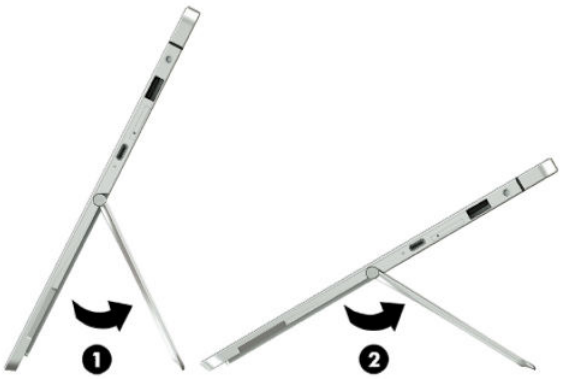

To close the kickstand, push the kickstand against the bottom of the tablet until it is flush with the bottom.

Keyboard base components (select products only)

Your tablet supports an optional keyboard. This section provides information about the common features of the supported keyboards.

NOTE: Keyboard appearance and features might vary.

TouchPad

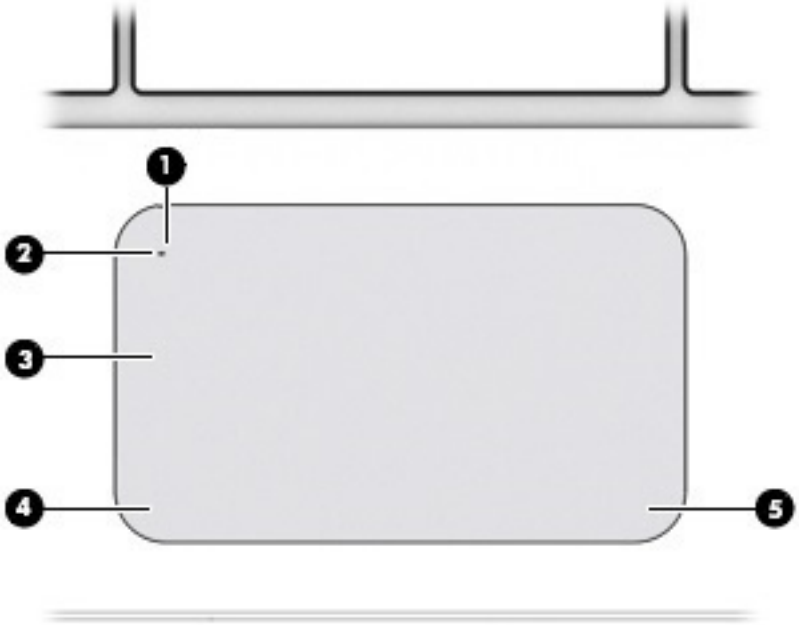

Component		Description
(1)	TouchPad on/off button	Turns the TouchPad on and off.
(2)	TouchPad light	• On: The TouchPad is off. • Off: The TouchPad is on.
(3)	TouchPad zone	Reads your finger gestures to move the pointer or activate items on the screen.
(4)	Left TouchPad click area	Functions like the left button on an external mouse.
(5)	Right TouchPad click area	Functions like the right button on an external mouse.

Lights

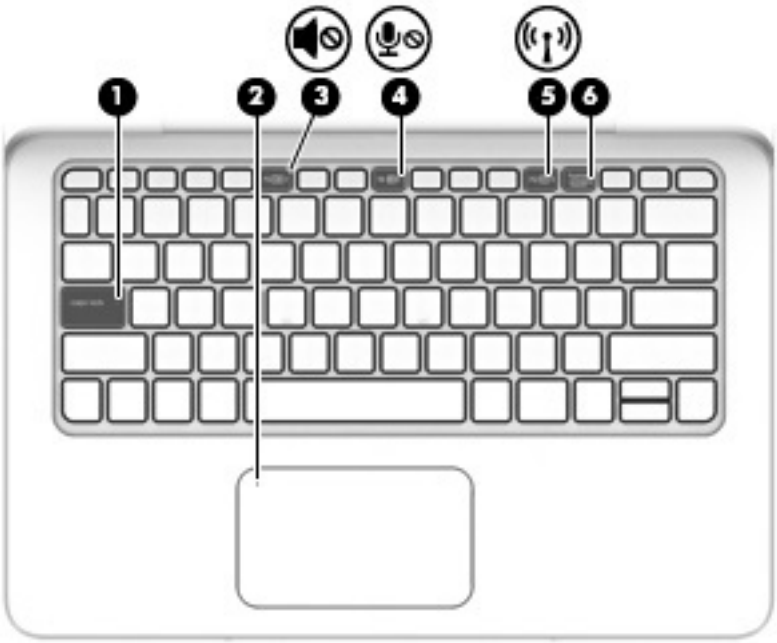

Component			Description
(1)		Caps lock light	• On: Caps lock is on, which switches the keys to all capital letters.
(2)		TouchPad light	• On: The TouchPad is off. • Off: The TouchPad is on.
(3)		Mute light	• Amber: Sound is off. • Off: Sound is on.
(4)		Microphone mute light	• Amber: microphone sound is off. • Off: microphone sound is on.
(5)		Wireless light	On: An integrated wireless device, such as a wireless local area network (WLAN) device and/or a Bluetooth® device, is on. **NOTE:** On some models, the wireless light is amber when all wireless devices are off.
(6)		Num lock light	On: Num lock is on.

Special function keys

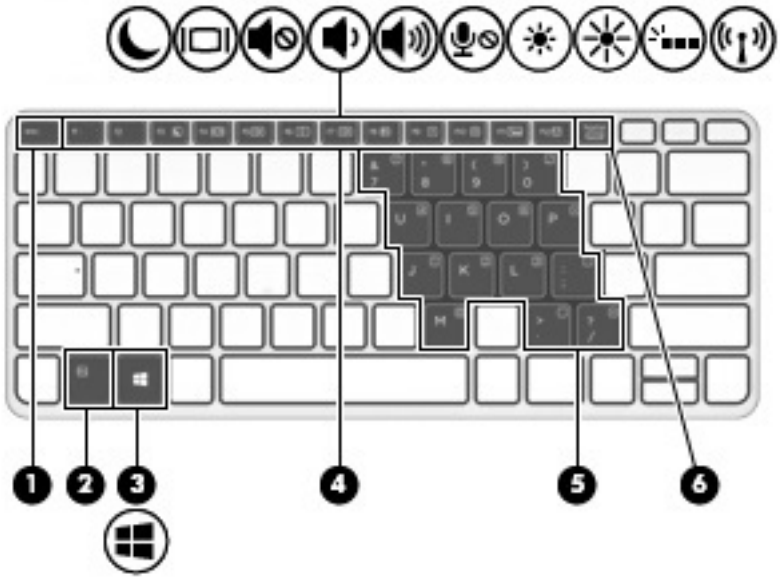

Component		Description
(1)	esc key	Displays system information when pressed in combination with the fn key.
(2)	fn key	Executes frequently used system functions when pressed in combination with a function key, the num lock key, or the esc key.
(3)	Windows key	Opens the **Start** menu. **NOTE:** Pressing the Windows key again will close the **Start** menu.
(4)	Function keys	Execute frequently used system functions when pressed in combination with the fn key. **NOTE:** Function keys do not display or function from the on-screen tablet keyboard.
(5)	Embedded numeric keypad	When the keypad is turned on, it can be used like an external numeric keypad. Each key on the keypad performs the function indicated by the icon in the upper-right corner of the key.
(6)	num lock key	Turns the embedded numeric keypad on and off when pressed in combination with the fn key.

Using the hot keys

To use a hot key:

▲ Press the fn key, and then press the correct function key represented by the icons below.

Press fn+function key	Description
	Initiates Sleep, which saves your information in system memory. The display and other system components turn off and power is conserved. To exit Sleep, briefly press the power button. **CAUTION:** To reduce the risk of information loss, save your work before initiating Sleep.
	Switches the screen image between display devices connected to the system. For example, if a monitor is connected to the tablet, repeatedly pressing this key alternates the screen image from the tablet to the monitor display to a simultaneous display on both the tablet and the monitor.
	Mutes or restores speaker sound.
	Decreases speaker volume incrementally while you hold down the key.
	Increases speaker volume incrementally while you hold down the key.
	Mutes the microphone.
	Decreases the screen brightness incrementally as long as you hold down the key.
	Increases the screen brightness incrementally as long as you hold down the key.
	Turns the keyboard backlight off or on. **NOTE:** To conserve battery power, turn off this feature.
	Turns the wireless feature on or off. **NOTE:** A wireless network must be set up before a wireless connection is possible.

NFC and Smart Card (select products only)

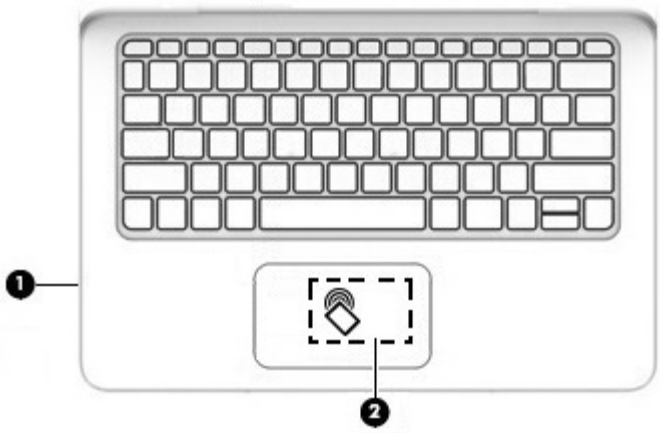

Component		Description
(1)	Smart card reader	Supports optional Smart cards.
(2)	Near Field Communication (NFC) antenna* and NFC tapping area	Send and receive wireless signals to communicate and transfer data/info to and from your NFC-compatible devices. For more information, see Sharing using NFC (select products only) on page 21.

*The antenna is not visible from the outside of the keyboard. For optimal transmission, keep the areas immediately around the antenna free from obstructions.

For wireless regulatory notices, see the section of the *Regulatory, Safety, and Environmental Notices* that applies to your country or region.

To access this guide:

▲ Select the **Start** button, select **All apps**, select **HP Help and Support**, and then select **HP Documentation**.

Connecting the tablet to the keyboard base

To connect the tablet to the keyboard base, follow these steps:

1. Insert the tablet POGO pin connector docking port into the keyboard base POGO pin docking connector.

2. Position the kickstand at the desired angle.

NOTE: If you close the kickstand, you can leave the keyboard attached and position the keyboard behind the tablet. The keyboard keys and TouchPad are locked to prevent you from accidently typing while the keyboard is in this position.

Removing the keyboard base from the tablet

To remove the keyboard base from the tablet, pull the keyboard away from the tablet.

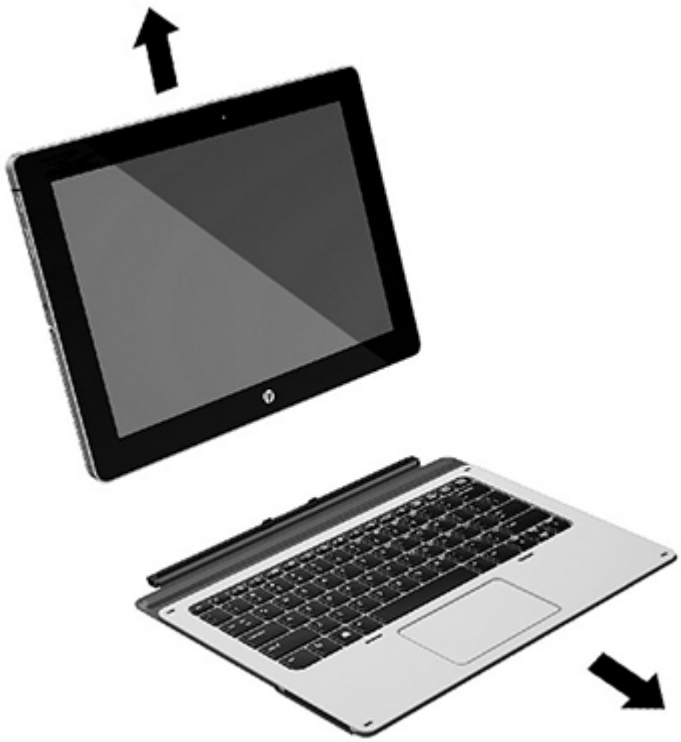

Labels

The labels affixed to the tablet provide information you may need when you troubleshoot system problems or travel internationally with the tablet.

IMPORTANT: Check the bottom of the tablet and the back of the display for the labels described in this section.

- Service label—Provides important information to identify your tablet. When contacting support, you will probably be asked for the serial number, and possibly for the product number or the model number. Locate these numbers before you contact support.

  Your service label will resemble the example shown below.

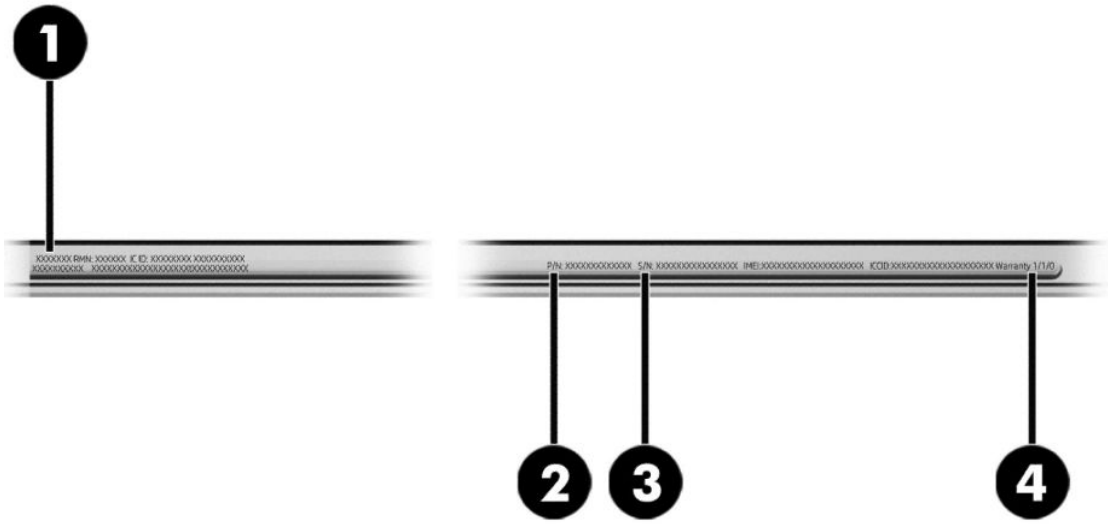

Component	
(1)	Model name (select products only)
(2)	Product number
(3)	Serial number
(4)	Warranty period

- Regulatory label(s)—Provide(s) regulatory information about the tablet.
- Wireless certification label(s)—Provide(s) information about optional wireless devices and the approval markings for the countries or regions in which the devices have been approved for use.

3 Network connections

Your tablet can travel with you wherever you go. But even at home, you can explore the globe and access information from millions of websites using your tablet and a wireless network connection. This chapter will help you get connected to that world.

Connecting to a wireless network

Your tablet may be equipped with one or more of the following wireless devices:

- WLAN device—Connects the tablet to wireless local area networks (commonly referred to as Wi-Fi networks, wireless LANs, or WLANs) in corporate offices, your home, and public places such as airports, restaurants, coffee shops, hotels, and universities. In a WLAN, the mobile wireless device in your tablet communicates with a wireless router or a wireless access point.
- HP Mobile Broadband Module (select products only)—A wireless wide area network (WWAN) device that gives you wireless connectivity over a much larger area. Mobile network operators install base stations (similar to cell phone towers) throughout large geographic areas, effectively providing coverage across entire states, regions, or even countries.
- Bluetooth device—Creates a personal area network (PAN) to connect to other Bluetooth-enabled devices such as tablets, phones, printers, headsets, speakers, and cameras. In a PAN, each device communicates directly with other devices, and devices must be relatively close together—typically within 10 meters (approximately 33 feet) of each other.

Using the wireless controls

You can control the wireless devices in your tablet using the operating system controls.

The Network and Sharing Center allows you to set up a connection or network, connect to a network, and diagnose and repair network problems.

To use operating system controls:

▲ From the Windows desktop, tap and hold the network status icon, and then select **Network and Sharing Center**.

Connecting to a WLAN

NOTE: When you are setting up Internet access in your home, you must establish an account with an Internet service provider (ISP). To purchase Internet service and a modem, contact a local ISP. The ISP will help set up the modem, install a network cable to connect your wireless router to the modem, and test the Internet service.

To connect to a WLAN, follow these steps:

1. Be sure that the WLAN device is on.
2. Select the network status icon in the taskbar, and then connect to one of the available networks.

   If the WLAN is a security-enabled WLAN, you are prompted to enter a security code. Type the code, and then tap **Next** to complete the connection.

   NOTE: If no WLANs are listed, you may be out of range of a wireless router or access point.

   NOTE: If you do not see the WLAN you want to connect to, from the Windows desktop, tap and hold the network status icon, and then select **Open Network and Sharing Center**. Tap **Set up a new connection or network**. A list of options is displayed, allowing you to manually search for and connect to a network or to create a new network connection.

3. Follow the on-screen instructions to complete the connection.

After the connection is made, tap the network status icon in the notification area, at the far right of the taskbar, to verify the name and status of the connection.

NOTE: The functional range (how far your wireless signals travel) depends on WLAN implementation, router manufacturer, and interference from other electronic devices or structural barriers such as walls and floors.

Using HP Mobile Broadband (select products only)

Your HP Mobile Broadband tablet has built-in support for mobile broadband service. Your new tablet, when used with a mobile operator's network, gives you the freedom to connect to the Internet, send e-mail, or connect to your corporate network without the need for Wi-Fi hotspots.

NOTE: If your tablet includes HP Mobile Connect, the instructions in this section do not apply. See Using HP Mobile Connect (select products only) on page 20.

You might need the HP Mobile Broadband Module IMEI and/or MEID number to activate mobile broadband service. The number is located on the back of the tablet.

– Or –

You can find the number following these steps:

1. From the taskbar, select the network status icon.
2. Select **View Connection Settings**.
3. Under the **Mobile broadband** section, select the network status icon.

Some mobile network operators require the use of a SIM card. A SIM card contains basic information about you, such as a personal identification number (PIN), as well as network information. Some tablets include a SIM card that is preinstalled. If the SIM card is not preinstalled, it may be provided in the HP Mobile Broadband information provided with your tablet or the mobile network operator may provide it separately from the tablet.

For information about installing a SIM card, see Installing a micro SIM card (select products only) on page 20.

For information about HP Mobile Broadband and how to activate service with a preferred mobile network operator, see the HP Mobile Broadband information included with your tablet.

Using HP Mobile Connect (select products only)

HP Mobile Connect is a prepaid, mobile broadband service that provides a cost-effective, secure, simple, and flexible mobile broadband connection for your tablet. To use HP Mobile Connect, your tablet must have a SIM card and the **HP Mobile Connect** app. For more information about HP Mobile Connect and where it is available, go to http://www.hp.com/go/mobileconnect.

Installing a micro SIM card (select products only)

⚠ **CAUTION:** To prevent damage to a SIM card or a tablet, do not change the size of a SIM card by cutting or sanding the card.

1. Insert a small straightened paper clip **(1)** into the card tray access hole.
2. Press in gently only until the card tray is ejected.
3. Remove the tray **(2)** from the tablet and insert the card **(3)**.
4. Replace the tray **(4)** in the tablet.
5. Press in gently on the tray until it is firmly seated.

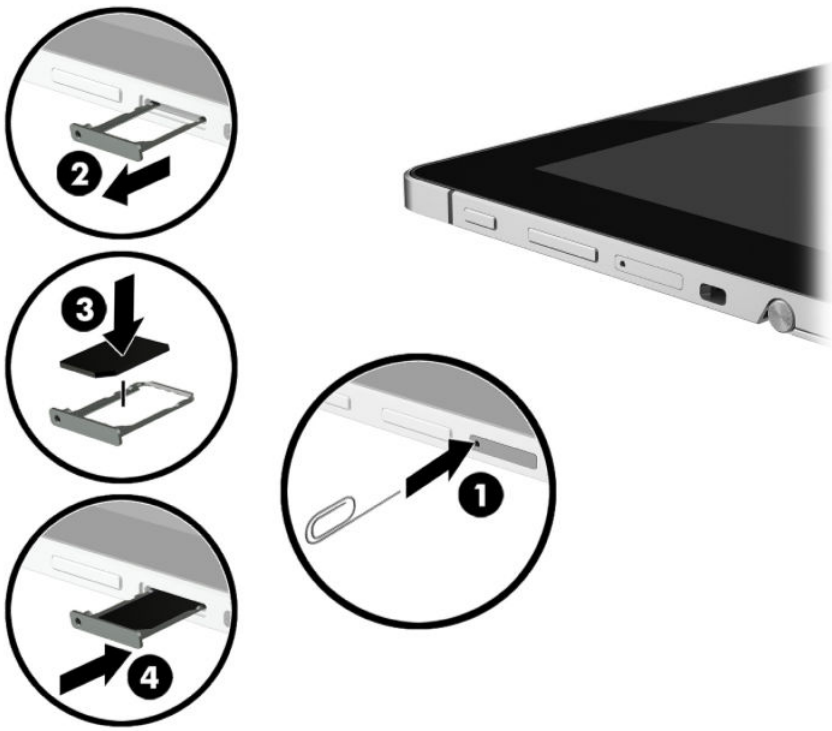

To set your mobile network, refer to the documentation from your mobile provider.

To remove the SIM card, reverse the steps.

Using GPS (select products only)

Your tablet may be equipped with a Global Positioning System (GPS) device. GPS satellites deliver location, speed, and direction information to GPS-equipped systems.

To enable GPS, make sure location is enabled under the Windows privacy setting.

1. Type `location` in the taskbar search box, and then select **Location privacy settings**.
2. Follow the on-screen instructions for using location settings.

For more information, see the Get started app.

To access the Get started app:

▲ Select the **Start** button, and then select the **Get started** app.

Using Bluetooth wireless devices (select products only)

A Bluetooth device provides short-range wireless communications that replace the physical cable connections that traditionally link electronic devices such as the following:

- Computers (desktop, notebook, tablet)
- Phones (cellular, cordless, smartphone)
- Imaging devices (printer, camera)
- Audio devices (headset, speakers)
- Mouse
- External keyboard

Bluetooth devices provide peer-to-peer capability that allows you to set up a PAN of Bluetooth devices. For information about configuring and using Bluetooth devices, see the Bluetooth software Help.

Connecting Bluetooth devices

Before you can use a Bluetooth device, follow these steps to establish a Bluetooth connection:

1. Type `bluetooth` in the taskbar search box, and then select **Bluetooth settings**.
2. Select **Devices**, select **Connected devices**, and then follow the on-screen instructions.

NOTE: If the device requires verification, a pairing code is displayed. On the device you are adding, follow the on-screen instructions to verify that the code matches.

Sharing using NFC (select products only)

Your tablet supports NFC, which is a high-frequency and short-range wireless communications technology. You can touch an NFC-compatible device to the NFC area on the keyboard to wirelessly connect and communicate with the tablet and transfer data back and forth. NFC can also be used for security purposes. See NFC and Smart Card (select products only) on page 14 to locate the NFC tapping area.

The NFC function is enabled by default on your tablet.

NOTE: Not all applications support NFC.

Connecting to an NFC device

1. Touch an NFC-compatible device to the NFC area on the keyboard.
2. After the **Add a device?** prompt displays, follow the on-screen instructions to connect.

Finding NFC apps

IMPORTANT: You must be connected to the Internet to access the Apps Store.

To view and download an NFC app:

1. Select the **Start** button, and then select the **Store** app.

   – or –

   Select the **Store** icon next to the taskbar search box.
2. Enter `NFC` in the search box.
3. Select the app you want to download, and then follow the on-screen instructions. When the download is complete, the app appears on the All apps screen.

4 Screen navigation

You can navigate the tablet screen in the following ways:

- Use touch gestures
- Use an external keyboard and optional mouse (purchased separately)
- Use a tablet pen

Using the touch screen and TouchPad (select products only) gestures

To navigate a touch screen, touch the screen directly using gestures described in this chapter. The TouchPad (select products only) helps you navigate the screen and control the pointer using simple touch gestures. You can also use the left and right TouchPad click areas as you would use the corresponding buttons on an external mouse.

You can also customize gestures and view demonstrations of how they work. Type `control panel` in the taskbar search box, select **Control Panel**, and then select **Hardware and Sound**. Under **Devices and Printers**, select **Mouse**.

NOTE: Unless noted, gestures can be used on the touch screen or a TouchPad (select products only).

Tap

Use the tap/double-tap gesture to select or open an item on the screen.

- Point to an item on the screen, and then tap one finger on the TouchPad zone or touch screen to select the item. Double-tap an item to open it.

Two-finger pinch zoom

Use the two-finger pinch zoom to zoom out or in on images or text.

- Zoom out by placing two fingers apart on the TouchPad zone or touch screen and then moving your fingers together.
- Zoom in by placing two fingers together on the TouchPad zone or touch screen and then moving your fingers apart.

One-finger slide (touch screen only)

Use the one-finger slide to pan or scroll through lists and pages, or to move an object.

- To scroll across the screen, lightly slide one finger across the screen in the direction you want to move.
- To move an object, press and hold your finger on an object, and then drag your finger to move the object.

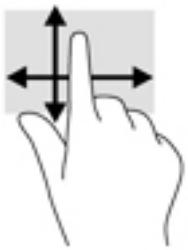

Two-finger scroll (TouchPad only)

Use the two-finger scroll to move up, down, or sideways on a page or image.

- Place two fingers slightly apart on the TouchPad zone and then drag them up, down, left, or right.

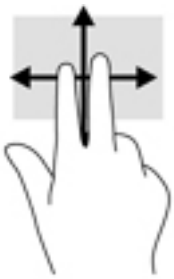

Two-finger tap (TouchPad only)

Use the two-finger tap to open the menu for an object on the screen.

NOTE: The two-finger tap performs the same function as right-clicking with the mouse.

- Tap two fingers on the TouchPad zone to open the options menu for the selected object.

Four-finger tap (TouchPad only)

Use the four-finger tap to open the action center.

- Tap four fingers on the Touchpad to open the action center and view current settings and notifications.

Three-finger swipe (TouchPad only)

Use the three-finger swipe to view open windows and to switch between open windows and the desktop.

- Swipe 3 fingers away from you to see all open windows.
- Swipe 3 fingers toward you to show the desktop.
- Swipe 3 fingers left or right to switch between open windows.

Using an optional external keyboard

Connecting an external keyboard allows you to type, select items, and scroll to perform some of the same functions you do using touch gestures. A keyboard also allows you to use action keys and key combinations to perform specific functions.

NOTE: Depending on the country or region, your keyboard may have different keys and keyboard functions than those discussed in this guide.

Using the tablet pen (select products only)

An active pen may be included with the tablet or available for purchase separately. You can use the pen directly on the tablet. For details about using the pen, refer to the instructions included with the pen.

You can write with the pen in pen-specific programs, in all Microsoft® Office programs, and in many other Windows programs and utilities. The information you write on the screen with the pen can be filed, searched, and shared among the programs.

Identifying the pen components

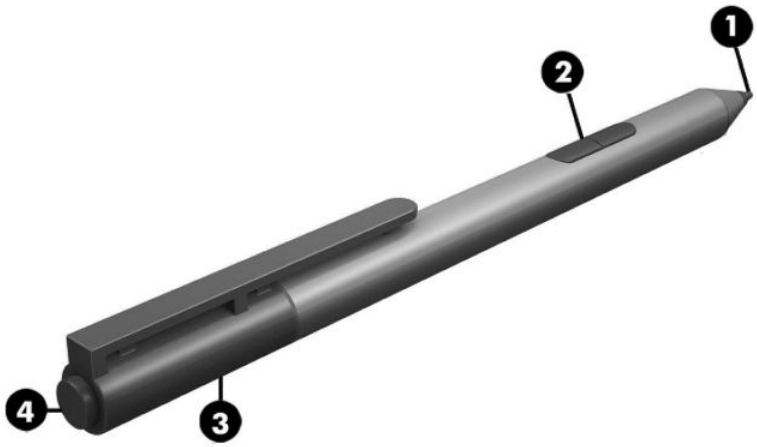

Component		Description
(1)	Pen tip	The pen interacts with the tablet whenever the tip of the pen is pressed against the screen.
(2)	Pen button	The functions vary. To view or edit the configuration of these buttons, use the pen app on your tablet.
(3)	Bluetooth light	Blue: The pen is in pairing mode Alternating red and blue: The pen is pairing with the tablet. Flashing blue: The pen has successfully paired.
(4)	Pairing button	Press and hold the button for 6 seconds to enable Bluetooth pairing.

Pairing the pen for use

1. Ready the pen for Bluetooth pairing by pressing and holding the pairing button for 6 seconds. When the pen is ready to be paired with the tablet, the Bluetooth light turns blue.
2. From the tablet, type `bluetooth` in the taskbar search box, and then select **Bluetooth settings**.
3. Select **Devices**, select **Connected devices**, and then follow the on-screen instructions.

Holding the pen

Hold the pen as if you were writing with a standard pen or pencil.

Storing the pen

To store the pen when you are not using it, use the tablet pen loop to attach it to the tablet or use the keyboard pen loop to attach it to the keyboard (select products only).

5 Entertainment features

Your tablet includes the following:

- Integrated speakers
- Integrated microphones
- Integrated webcam
- Preinstalled multimedia software

Using a webcam

Your tablet has a webcam (integrated camera) that records video and captures photographs. Some models allow you to video conference and chat online using streaming video.

▲ To access the camera, type `camera` in the taskbar search box, and then select **Camera** from the list of applications.

Using audio

On your tablet, you can download and listen to music, stream audio content from the web (including radio), record audio, or mix audio and video to create multimedia. To enhance your listening enjoyment, attach external audio devices such as speakers or headphones.

Adjusting the volume

You can adjust the volume using the volume button.

WARNING! To reduce the risk of personal injury, lower the volume setting before putting on headphones, earbuds, or a headset. For additional safety information, see the *Regulatory, Safety and Environmental Notices*.

To access this document:

▲ Select the **Start** button, select **All apps**, select **HP Help and Support**, and then select **HP Documentation**.

NOTE: You can also control volume through the operating system and some programs.

Connecting speakers

You can attach wired speakers to your tablet by connecting them to the USB port or to the audio-out (headphone)/audio-in (microphone) combo jack on your tablet.

To connect wireless speakers to your tablet, follow the device manufacturer's instructions. Before connecting speakers, lower the volume setting.

Connecting headphones

WARNING! To reduce the risk of personal injury, lower the volume setting before putting on headphones, earbuds, or a headset. For additional safety information, see the *Regulatory, Safety and Environmental Notices*.

To access this document:

▲ Select the **Start** button, select **All apps**, select **HP Help and Support**, and then select **HP Documentation**.

You can connect wired headphones to the audio-out (headphone)/audio-in (microphone) combo jack on your tablet.

To connect wireless headphones to your tablet, follow the device manufacturer's instructions.

Connecting headsets

WARNING! To reduce the risk of personal injury, lower the volume setting before putting on headphones, earbuds, or a headset. For additional safety information, see the *Regulatory, Safety and Environmental Notices*.

To access this document:

▲ Select the **Start** button, select **All apps**, select **HP Help and Support**, and then select **HP Documentation**.

Headphones combined with a microphone are called headsets. You can connect wired headsets to the audio-out (headphone)/audio-in (microphone) combo jack on your tablet.

To connect wireless headsets to your tablet, follow the device manufacturer's instructions.

Using sound settings

Use sound settings to adjust system volume, change system sounds, or manage audio devices.

To view or change sound settings:

▲ Type `control panel` in the taskbar search box, select **Control Panel**, select **Hardware and Sound**, and then select **Sound**.

Your tablet may include an enhanced sound system by Bang & Olufsen, DTS, Beats audio, or another provider. As a result, your tablet may include advanced audio features that can be controlled through an audio control panel specific to your audio system.

Use the audio control panel to view and control audio settings.

▲ Type `control panel` in the taskbar search box, select **Control Panel**, select **Hardware and Sound**, and then select the audio control panel specific to your system.

Using video

Your HP tablet is a powerful video device that enables you to watch streaming video from your favorite websites and download video and movies to watch on your tablet without needing to connect to a network.

To enhance your viewing enjoyment, use a USB port on the tablet and the correct video adapter to connect an external monitor, projector, or TV.

IMPORTANT: Be sure that the external device is connected to the correct port on the tablet, using the correct cable. Check the device manufacturer's instructions if you have questions.

6 Power management

Your tablet can operate on either battery power or external power. When the tablet is running on battery power only and an AC power source is not available to charge the battery, it is important to monitor and conserve the battery charge.

Shutting down (turning off) the tablet

CAUTION: Unsaved information is lost when the tablet shuts down.

The shutdown command closes all open programs, including the operating system, and then turns off the display and tablet.

Shut down the tablet when the tablet will be unused and disconnected from external power for an extended period.

Although you can turn off the tablet with the power button, the recommended procedure is to use the Windows shutdown command:

NOTE: If the tablet is in the Sleep state, first exit Sleep by briefly pressing the power button.

1. Save your work and close all open programs.
2. Select the **Start** button, select the **Power** icon, and then select **Shut down**.

If the tablet is unresponsive and you are unable to use the preceding shutdown procedures, try the following emergency procedures in the sequence provided:

- Press and hold the power button for at least 5 seconds.
- Disconnect the tablet from external power.

Setting power options

CAUTION: Several well-known vulnerabilities exist when a computer is in the Sleep state. To prevent an unauthorized user from accessing data on your tablet, even encrypted data, HP recommends that you always initiate Hibernation instead of Sleep anytime the tablet will be out of your physical possession. This practice is particularly important when you travel with your tablet.

Using power-saving states

Sleep is enabled at the factory. When Sleep is initiated, the power lights blink and the screen clears. Your work is saved to memory.

CAUTION: To reduce the risk of possible audio and video degradation, loss of audio or video playback functionality, or loss of information, do not initiate Sleep while reading from or writing to a disc or an external memory card.

Initiating and exiting Sleep

To initiate Sleep, select the **Start** button, select the **Power** icon, and then select **Sleep**.

To exit Sleep, briefly press the power button.

When the tablet exits Sleep, your work returns to the screen.

NOTE: If you have set a password to be required on exiting Sleep, you must enter your Windows password before your work returns to the screen.

Enabling and exiting user-initiated Hibernation

You can enable user-initiated Hibernation and change other power settings and timeouts using Power Options:

1. Type `power options` in the taskbar search box, and then select **Power Options**.

   – or –

   Tap and hold the **Power meter** icon , and then select **Power Options**.

2. In the left pane, select **Choose what the power buttons do**.
3. Select **Change Settings that are currently unavailable**, and then, in the **When I press the power button** or **When I press the sleep button** area, select **Hibernate**.

   – or –

   Under **Shutdown settings**, select the **Hibernate** box to show the Hibernate option in the Power menu.

4. Select **Save changes**.

To exit Hibernation, briefly press the power button. The power lights turn on and your work returns to the screen where you stopped working.

NOTE: If you have set a password to be required on wakeup, you must enter your Windows password before your work will return to the screen.

Using the power meter and power settings

The power meter is located on the Windows desktop. The power meter allows you to quickly access power settings and view the remaining battery charge.

- To view the percentage of remaining battery charge and the current power plan, tap the power meter icon .
- To use Power Options, tap the power meter icon , and then select an item from the list. You can also type `power options` in the task bar search box, and then select **Power Options**.

Different power meter icons indicate whether the tablet is running on battery or external power. The icon also reveals a message if the battery has reached a low or critical battery level.

Setting password protection on wakeup

To set the tablet to prompt for a password when the tablet exits Sleep, follow these steps:

1. Type `power options` in the taskbar search box, and then select **Power Options**.

   – or –

Tap and hold the **Power meter** icon , and then select **Power Options**.

2. In the left pane, tap **Require a password on wakeup**.
3. Tap **Change Settings that are currently unavailable**.
4. Tap **Require a password (recommended)**.

NOTE: If you need to create a user account password or change your current user account password, tap **Create or change your user account password**, and then follow the on-screen instructions. If you do not need to create or change a user account password, go to step 5.

5. Tap **Save changes**.

Using battery power

WARNING! To reduce potential safety issues, use only the battery provided with the tablet, a replacement battery provided by HP, or a compatible battery purchased from HP.

The tablet runs on battery power whenever it is not plugged into external AC power. Tablet battery life varies, depending on power management settings, running programs, display brightness, external devices connected to the tablet, and other factors. Keeping the battery in the tablet whenever the tablet is plugged into AC power charges the battery and also protects your work in case of a power outage. If the tablet contains a charged battery and is running on external AC power, the tablet automatically switches to battery power if the AC adapter is disconnected on the tablet or an AC power loss occurs.

NOTE: When you disconnect AC power, the display brightness may automatically decrease to save battery life. Select tablet products can switch between graphic modes to increase battery life.

Finding additional battery information

To access battery information:

1. Type `support` in the taskbar search box, and then select the **HP Support Assistant** app.

   – or –

   Select the question mark icon in the taskbar.

2. Select **My PC**, select the **Diagnostics and Tools** tab, and then select **HP Battery Check**. If HP Battery Check indicates that your battery should be replaced, contact support.

HP Support Assistant provides the following tools and information about the battery.

- HP Battery Check tool to test battery performance
- Information on calibration, power management, and proper care and storage to maximize battery life
- Information on battery types, specifications, life cycles, and capacity

Using HP Battery Check

To monitor the status of your battery, or if the battery is no longer holding a charge, run HP Battery Check in the HP Support Assistant app. If HP Battery Check indicates that your battery should be replaced, contact support.

To run HP Battery Check:

1. Connect the AC adapter to the tablet.

NOTE: The tablet must be connected to external power for HP Battery Check to work properly.

2. Type `support` in the taskbar search box, and then select the **HP Support Assistant** app.

   – or –

   Select the question mark icon in the taskbar.

3. Select **My PC**, select the **Diagnostics and Tools** tab, and then select **HP Battery Check**. If HP Battery Check indicates that your battery should be replaced, contact support.

HP Battery Check examines the battery and its cells to see if they are functioning properly, and then reports the results of the examination.

Displaying the remaining battery charge

▲ Tap the **Power meter** icon .

Maximizing battery discharge time

Battery discharge time varies depending on features you use while on battery power. Maximum discharge time gradually decreases as the battery storage capacity naturally degrades.

Tips for maximizing battery discharge time:

- Lower the brightness on the display.
- Select the **Power saver** setting in Power Options.

Managing low battery levels

The information in this section describes the alerts and system responses set at the factory. Some low-battery alerts and system responses can be changed using Power Options. Preferences set using Power Options do not affect lights.

Type `power options` in the taskbar search box, and then select **Power Options**.

Identifying low battery levels

When a battery that is the sole power source for the tablet reaches a low or critical battery level, the following behavior occurs:

- The battery light (select products only) indicates a low or critical battery level.

– or –

- The **Power meter** icon shows a low or critical battery notification.

If the tablet is on or in the Sleep state, the tablet remains briefly in the Sleep state and then shuts down and loses any unsaved information.

Resolving a low battery level

Resolving a low battery level when external power is available

▲ Connect one of the following devices:

- AC adapter
- Optional docking or expansion device
- Optional power adapter purchased as an accessory from HP

Resolving a low battery level when no power source is available

To resolve a low battery level when no power source is available, save your work and shut down the tablet.

Conserving battery power

To conserve battery power and maximize battery life:

- Type `power options` in the taskbar search box, and then select **Power Options**.

  – or –

- Select low power-use settings through Power Options.
- Turn off wireless and LAN connections and exit modem applications when you are not using them.
- Disconnect unused external devices that are not plugged into an external power source.
- Stop, disable, or remove any external memory cards that you are not using.
- Decrease screen brightness.
- Before you leave your work, initiate Sleep or shut down the tablet.

Disposing of a battery

When a battery has reached the end of its useful life, do not dispose of the battery in general household waste. Follow the local laws and regulations in your area for battery disposal.

Replacing a battery

The battery(ies) in this product cannot be easily replaced by users themselves. Removing or replacing the battery could affect your warranty coverage. If a battery is no longer holding a charge, contact support.

Using external AC power

WARNING! To reduce potential safety issues, use only the AC adapter provided with the tablet, a replacement AC adapter provided by HP, or a compatible AC adapter purchased from HP.

NOTE: For information about connecting to AC power, refer to the *Quick Start* guide provided in the tablet box.

External AC power is supplied through an approved AC adapter or an optional docking or expansion device.

Connect the tablet to AC power under any of the following conditions:

- When charging or calibrating a battery
- When installing or modifying system software
- When performing a backup or recovery

When you connect the tablet to AC power:

- The battery begins to charge.
- The screen brightness increases.
- The power meter icon changes appearance.

When you disconnect AC power:

- The tablet switches to battery power.
- The screen brightness automatically decreases to save battery life.
- The power meter icon changes appearance.

7 MicroSD cards

Using the microSD card reader

Optional microSD cards provide secure data storage and convenient data sharing. These cards are often used with digital media-equipped cameras and PDAs as well as with other computers.

Inserting a microSD card

⚠ **CAUTION:** To reduce the risk of damage to the memory card connectors, use minimal force to insert a microSD card.

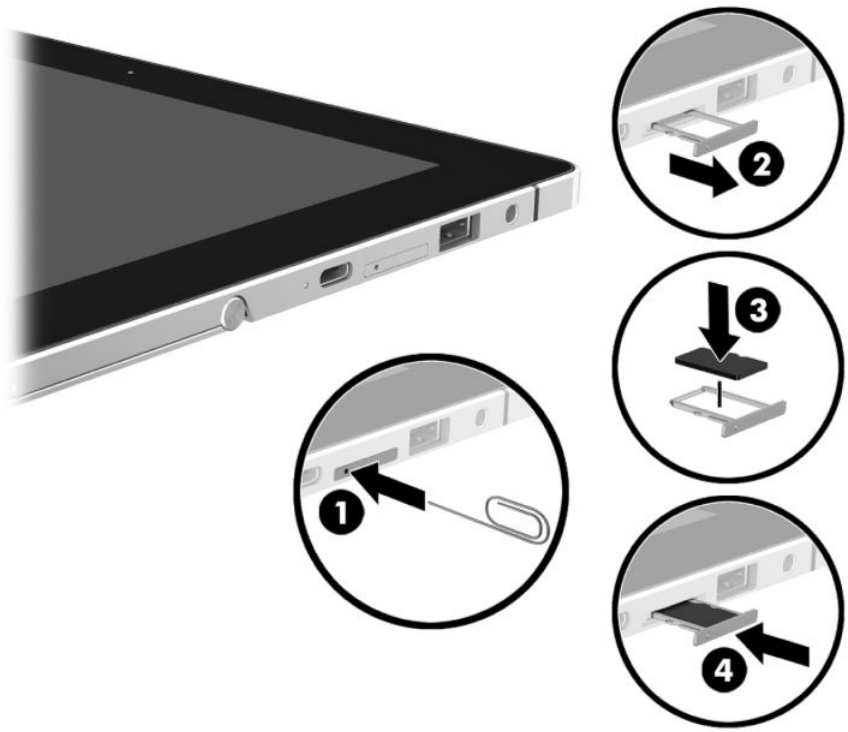

1. Insert a small straightened paper clip **(1)** into the card tray access hole.
2. Press in gently only until the card tray is ejected.
3. Remove the tray **(2)** from the tablet and insert the card **(3)**.
4. Replace the tray **(4)** in the tablet.
5. Press in gently on the tray until it is firmly seated.

   You will hear a sound when the device has been detected, and a menu of options may be displayed.

Removing a microSD card

⚠ **CAUTION:** To reduce the risk of loss of data or an unresponsive system, use the following procedure to safely remove the microSD card.

1. Save your information and close all programs associated with the microSD card.
2. Tap the remove hardware icon in the notification area, at the far right of the taskbar. Then follow the on-screen instructions.

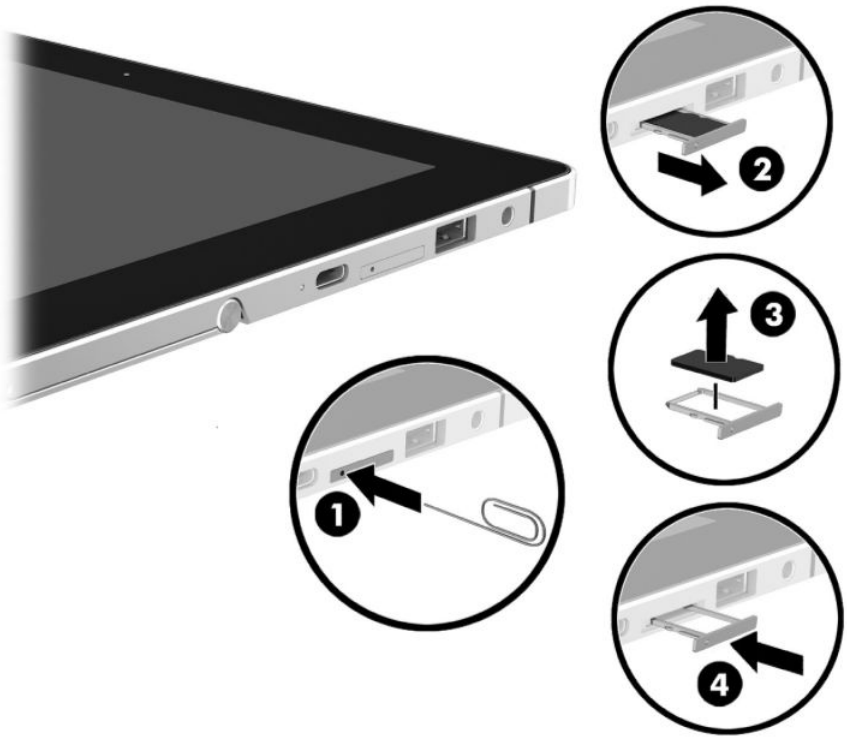

3. Insert a small straightened paper clip **(1)** into the card tray access hole.
4. Press in gently only until the card tray is ejected.
5. Remove the tray **(2)** from the tablet and remove the card **(3)**.
6. Replace the tray **(4)** in the tablet.
7. Press in gently on the tray until it is firmly seated.

8 Security

Protecting the tablet

Standard security features provided by the Windows operating system and the non-Windows Computer Setup utility (BIOS) can protect your personal settings and data from a variety of risks.

NOTE: Security solutions are designed to act as deterrents. These deterrents may not prevent a product from being mishandled or stolen.

NOTE: Before you send your tablet for service, back up and delete confidential files, and remove all password settings.

NOTE: Some features listed in this chapter may not be available on your tablet.

NOTE: Your tablet supports Computrace, which is an online security-based tracking and recovery service available in select regions. If the tablet is stolen, Computrace can track the tablet if the unauthorized user accesses the Internet. You must purchase the software and subscribe to the service in order to use Computrace. For information about ordering the Computrace software, go to http://www.hp.com.

Tablet risk	Security feature
Unauthorized use of the tablet	HP Client Security, in combination with a password, smart card, contactless card, registered fingerprints, or other authentication credential
Unauthorized access to Computer Setup (BIOS)	BIOS Administrator password in Computer Setup*
Unauthorized access to the contents of a hard drive	DriveLock password (select products only) in Computer Setup*
Unauthorized startup from an optional external optical drive (select products only), optional external hard drive (select products only), or internal network adapter	Boot options feature in Computer Setup*
Unauthorized access to a Windows user account	Windows user password
Unauthorized access to data	• HP Drive Encryption software • Windows Defender
Unauthorized access to Computer Setup settings and other system identification information	BIOS Administrator password in Computer Setup*
Unauthorized removal of the tablet	Security cable slot (used with an optional security cable on select products only)

*Computer Setup is a preinstalled, ROM-based utility that can be used even when the operating system is not working or will not load. You can use a pointing device (TouchPad, pointing stick, or USB mouse) or the keyboard to navigate and make selections in Computer Setup.

NOTE: On tablets without keyboards, you can use the touchscreen.

Using passwords

A password is a group of characters that you choose to secure your tablet information. Several types of passwords can be set, depending on how you want to control access to your information. Passwords can be set in Windows or in Computer Setup, which is preinstalled on the tablet.

- BIOS administrator and DriveLock passwords are set in Computer Setup and are managed by the system BIOS.
- Windows passwords are set only in the Windows operating system.
- If you forget both the DriveLock user password and the DriveLock master password set in Computer Setup, the hard drive that is protected by the passwords is permanently locked and can no longer be used.

You can use the same password for a Computer Setup feature and for a Windows security feature. You can also use the same password for more than one Computer Setup feature.

Use the following tips for creating and saving passwords:

- When creating passwords, follow requirements set by the program.
- Do not use the same password for multiple applications or websites, and do not reuse your Windows password for any other application or website.
- Use the Password Manager feature of HP Client Security to store your user names and passwords for your websites and applications. You can securely read them in the future if they cannot be remembered.
- Do not store passwords in a file on the tablet.

The following tables list commonly used Windows and BIOS administrator passwords and describe their functions.

Setting passwords in Windows

Password	Function
Administrator password*	Protects access to a Windows administrator-level account. **NOTE:** Setting the Windows administrator password does not set the BIOS Administrator password.
User password*	Protects access to a Windows user account.
*For information about setting a Windows administrator password or a Windows user password, type `support` in the taskbar search box, and then select the **HP Support Assistant** app.	

Setting passwords in Computer Setup

Password	Function
BIOS administrator password*	Protects access to Computer Setup. **NOTE:** If features have been enabled to prevent removing the BIOS administrator password, you may not be able to remove it until those features have been disabled.
DriveLock master password*	Protects access to the internal hard drive that is protected by DriveLock. It is also used to remove DriveLock protection. **NOTE:** For select products, a BIOS administrator password must be set before you can set a DriveLock password.
DriveLock user password*	Protects access to the internal hard drive that is protected by DriveLock, and is set under DriveLock Passwords during the enable process. **NOTE:** For select products, a BIOS administrator password must be set before you can set a DriveLock password.
*For details about each of these passwords, see the following topics.	

Managing a BIOS administrator password

To set, change, or delete this password, follow these steps:

Setting a new BIOS administrator password

1. Start Computer Setup.
   - Tablets with keyboards:
     - ▲ Turn on or restart the tablet, and when the HP logo appears, press f10 to enter Computer Setup.
   - Tablets without keyboards:
     - ▲ Turn off the tablet. Press the power button in combination with the volume down button until the Startup menu is displayed, and then tap **F10** to enter Computer Setup.
2. Select **Security**, select **Create BIOS Administrator password** or **Set Up BIOS Administrator Password** (select products only), and then press enter.
3. When prompted, type a password.
4. When prompted, type the new password again to confirm.
5. To save your changes and exit Computer Setup, select the **Save** icon and then follow the on-screen instructions.

   – or –

   Select **Main**, select **Save Changes and Exit**, and then press enter.

Your changes go into effect when the tablet restarts.

Changing a BIOS administrator password

1. Start Computer Setup.
   - Tablets with keyboards:

- ▲ Turn on or restart the tablet, and when the HP logo appears, press f10 to enter Computer Setup.

- Tablets without keyboards:
  - ▲ Turn off the tablet. Press the power button in combination with the volume down button until the Startup menu is displayed, and then tap **F10** to enter Computer Setup.

2. Select **Security**, select **Change BIOS Administrator Password** or **Change Password** (select products only), and then press enter.
3. When prompted, type your current password.
4. When prompted, type your new password.
5. When prompted, type your new password again to confirm.
6. To save your changes and exit Computer Setup, select the **Save** icon, and then follow the on-screen instructions.

   – or –

   Select **Main**, select **Save Changes and Exit**, and then press enter.

Your changes go into effect when the tablet restarts.

Deleting a BIOS administrator password

1. Start Computer Setup.
   - Tablets with keyboards:
     - ▲ Turn on or restart the tablet, and when the HP logo appears, press f10 to enter Computer Setup.
   - Tablets without keyboards:
     - ▲ Turn off the tablet. Press the power button in combination with the volume down button until the Startup menu is displayed, and then tap **F10** to enter Computer Setup.
2. Select **Security**, select **Change BIOS Administrator Password** or **Change Password** (select products only), and then press enter.
3. When prompted, type your current password.
4. When prompted for the new password, leave the field empty, and then press enter.
5. When prompted to type your new password again, leave the field empty, and then press enter.
6. To save your changes and exit Computer Setup, select the **Save** icon, and then follow the on-screen instructions.

   – or –

   Select **Main**, select **Save Changes and Exit**, and then press enter.

Your changes go into effect when the tablet restarts.

Entering a BIOS administrator password

At the **BIOS Administrator password** prompt, type your password (using the same kind of keys you used to set the password), and then press enter. After two unsuccessful attempts to enter the BIOS administrator password, you must restart the tablet and try again.

Managing a Computer Setup DriveLock password (select products only)

CAUTION: To prevent a DriveLock-protected hard drive from becoming permanently unusable, record the DriveLock user password and the DriveLock master password in a safe place away from your tablet. If you forget both DriveLock passwords, the hard drive will be permanently locked and can no longer be used.

DriveLock protection prevents unauthorized access to the contents of a hard drive. DriveLock can be applied only to the internal hard drive(s) of the computer. After DriveLock protection is applied to a drive, a password must be entered to access the drive. The drive must be inserted into the tablet or an advanced port replicator in order for it to be accessed by the DriveLock passwords.

To apply DriveLock protection to an internal hard drive, a user password and a master password must be set in Computer Setup. Note the following considerations about using DriveLock protection:

- After DriveLock protection is applied to a hard drive, the hard drive can be accessed only by entering either the user password or the master password.
- The owner of the user password should be the day-to-day user of the protected hard drive. The owner of the master password may be either a system administrator or the day-to-day user.
- The user password and the master password can be identical.
- You can delete a user password or master password only by removing DriveLock protection from the drive.

NOTE: For select products, a BIOS administrator password must be set before you can access the DriveLock features.

Setting a DriveLock password

To set a DriveLock password in Computer Setup, follow these steps:

1. Start Computer Setup.
   - Tablets with keyboards:
     1. Turn off the tablet.
     2. Press the power button, and when the HP logo appears, press f10 to enter Computer Setup.
   - Tablets without keyboards:
     1. Turn off the tablet.
     2. Press the power button in combination with the volume down button until the Startup menu is displayed, and then tap **F10** to enter Computer Setup.
2. Select **Security**, make the selection for **Hard Drive Utilities** or **Hard Drive Tools** (select products only), select **DriveLock**, and then press enter.

   NOTE: For select products, you may be required to set a DriveLock password and enter the BIOS administrator password.
3. Select the hard drive you want to protect, and then press enter.
4. Select **Set DriveLock Master Password** or **Set DriveLock Password** (select products only), and then press enter.
5. Carefully read the warning.
6. Follow the on-screen instructions to set a DriveLock password.
7. To exit Computer Setup, select **Main**, select **Save Changes and Exit**, and then select **Yes**.

Enabling DriveLock (select products only)

For select products, you may need to follow these instructions to enable DriveLock.

1. Start Computer Setup.
   - Tablets with keyboards:
     1. Turn off the tablet.
     2. Press the power button, and when the HP logo appears, press f10 to enter Computer Setup.
   - Tablets without keyboards:
     1. Turn off the tablet.
     2. Press the power button in combination with the volume down button until the Startup menu is displayed, and then tap **F10** to enter Computer Setup.
2. Select **Security**, select **Hard Drive Utilities** or **Hard Drive Tools** (select products only), select **DriveLock**, and then press enter.

   NOTE: For select products, you may be required to enter the BIOS Administrator password and select **Set DriveLock Password**.

3. Select the hard drive you want to protect, and then press enter.
4. Follow the on-screen instructions to make the selections to enable DriveLock and to enter passwords when prompted.

   NOTE: For select products, you may be prompted to type `DriveLock`. The field is case sensitive.

5. To exit Computer Setup, select **Main**, select **Save Changes and Exit**, and then select **Yes**.

Disabling DriveLock (select products only)

1. Start Computer Setup.
   - Tablets with keyboards:
     1. Turn off the tablet.
     2. Press the power button, and when the HP logo appears, press f10 to enter Computer Setup.
   - Tablets without keyboards:
     1. Turn off the tablet.
     2. Press the power button in combination with the volume down button until the Startup menu is displayed, and then tap **F10** to enter Computer Setup.
2. Select **Security**, select **Hard Drive Utilities** or **Hard Drive Tools** (select products only), select **DriveLock**, and then press enter.

   NOTE: For select products, you may be required to enter the BIOS Administrator password and select **Set DriveLock Password**.

3. Select the hard drive you want to manage, and then press enter.
4. Follow the on-screen instructions to disable DriveLock.
5. To exit Computer Setup, select **Main**, select **Save Changes and Exit**, and then select **Yes**.

Entering a DriveLock password (select products only)

Be sure that the hard drive is inserted into the tablet (not into an optional docking device or external MultiBay).

At the **DriveLock Password** prompt, type your user or master password (using the same kind of keys you used to set the password), and then press enter.

After three incorrect attempts to enter the password, you must shut down the tablet and try again.

Changing a DriveLock password (select products only)

To change a DriveLock password in Computer Setup, follow these steps:

1. Turn off the tablet.
2. Press the power button.
3. At the **DriveLock Password** prompt, type the current DriveLock user password or master password that you are changing, press enter, and then press or tap **f10** to enter Computer Setup.
4. Select **Security**, select **Hard Drive Utilities** or **Hard Drive Tools** (select products only), select **DriveLock**, and then press enter.

   NOTE: For select products, you may be required to enter the BIOS Administrator password and select **Set DriveLock Password**.

5. Select the hard drive you want to manage, and then press enter.
6. Make the selection to change the password, and then follow the on-screen prompts to enter passwords.

   NOTE: The **Change DriveLock Master Password** option is visible only if the master password was provided at the DriveLock Password prompt in step 3.

7. To exit Computer Setup, select **Main**, select **Save Changes and Exit**, and then follow the on-screen instructions.

Using antivirus software

When you use the tablet to access e-mail, a network, or the Internet, you potentially expose it to computer viruses. Viruses can disable the operating system, programs, or utilities, or cause them to function abnormally.

Antivirus software can detect most viruses, destroy them, and, in most cases, repair any damage they have caused. To provide ongoing protection against newly discovered viruses, antivirus software must be kept up to date.

Windows Defender is preinstalled. It is strongly recommended that you continue to use an antivirus program in order to fully protect your tablet.

For more information about viruses, access the HP Support Assistant.

Using firewall software

Firewalls are designed to prevent unauthorized access to a system or network. A firewall can be a software program you install on your tablet and/or network, or it can be a solution made up of both hardware and software.

There are two types of firewalls to consider:

- Host-based firewalls—Software that protects only the tablet it is installed on.
- Network-based firewalls—Installed between your DSL or cable modem and your home network to protect all the computers on the network.

When a firewall is installed on a system, all data sent to and from the system is monitored and compared with a set of user-defined security criteria. Any data that does not meet those criteria is blocked.

Your tablet or networking equipment may already have a firewall installed. If not, firewall software solutions are available.

NOTE: Under some circumstances a firewall can block access to Internet games, interfere with printer or file sharing on a network, or block authorized e-mail attachments. To temporarily resolve the problem, disable the firewall, perform the task that you want to perform, and then reenable the firewall. To permanently resolve the problem, reconfigure the firewall.

Installing critical security updates

CAUTION: Microsoft® sends out alerts regarding critical updates. To protect the tablet from security breaches and viruses, install all critical updates from Microsoft as soon as you receive an alert.

You can choose whether updates are installed automatically. To change the settings, type `control panel` in the taskbar search box, and then select **Control Panel**. Select **System and Security**, select **Windows Update**, select **Change settings**, and then follow the on-screen instructions.

Using HP Client Security (select products only)

HP Client Security software is preinstalled. This software can be accessed through the HP Client Security icon at the far right of the taskbar or Windows Control Panel. It provides security features that help protect against unauthorized access to the tablet, networks, and critical data. For more information, see the HP Client Security software Help.

Using HP Touchpoint Manager (select products only)

HP Touchpoint Manager is a cloud-based IT solution that enables businesses to effectively manage and secure their company assets. HP Touchpoint Manager helps protect devices against malware and other attacks, monitors device health, and enables customers to reduce time spent solving end-user device and security issues. Customers can quickly download and install the software, which is highly cost effective relative to traditional in-house solutions. For more information, see http://www.hptouchpointmanager.com.

Using an optional security cable

A security cable (purchased separately) is designed to act as a deterrent, but it may not prevent the tablet from being mishandled or stolen. To connect a security cable to your tablet, follow the device manufacturer's instructions.

Using a fingerprint reader (select products only)

Integrated fingerprint readers are available on select products. In order to use the fingerprint reader, you must enroll your fingerprints in HP Client Security's Credential Manager. Refer to the HP Client Security software Help.

After you enroll your fingerprints in Credential Manager, you can use HP Client Security's Password Manager to store and fill in your user names and passwords in supported websites and applications.

Locating the fingerprint reader

The fingerprint reader is a small metallic sensor that is located on the back of the tablet.

Depending on your product, the reader may be oriented horizontally or vertically. Both orientations require that you swipe your finger perpendicular to the metallic sensor.

9 Maintenance

It is important to perform regular maintenance to keep your tablet in optimal condition. This chapter provides instructions for updating programs and drivers, steps to clean the tablet, and tips for traveling with (or shipping) the tablet.

Updating programs and drivers

HP recommends that you update your programs and drivers on a regular basis. Updates can resolve issues and bring new features and options to your tablet. For example, older graphics components might not work well with the most recent gaming software. Without the latest driver, you would not be getting the most out of your equipment.

Go to http://www.hp.com/support to download the latest versions of HP programs and drivers. In addition, register to receive automatic notifications when updates become available.

If you would like to update your programs and drivers, follow these instructions:

1. Type `support` in the taskbar search box, and then select the **HP Support Assistant** app.

   – or –

   Tap the question mark icon in the taskbar.
2. Select **My PC**, select the **Updates** tab, and then select **Check for updates and messages**.
3. Follow the on-screen instructions.

Cleaning your tablet

Use the following products to safely clean your tablet:

- Dimethyl benzyl ammonium chloride 0.3 percent maximum concentration (for example, disposable wipes, which come in a variety of brands)
- Alcohol-free glass-cleaning fluid
- Solution of water and mild soap
- Dry microfiber cleaning cloth or a chamois (static-free cloth without oil)
- Static-free cloth wipes

⚠ **CAUTION:** Avoid strong cleaning solvents that can permanently damage your tablet. If you are not sure that a cleaning product is safe for your tablet, check the product contents to make sure that ingredients such as alcohol, acetone, ammonium chloride, methylene chloride, and hydrocarbons are not included in the product.

Fibrous materials, such as paper towels, can scratch the tablet. Over time, dirt particles and cleaning agents can get trapped in the scratches.

Cleaning procedures

Follow the procedures in this section to safely clean your tablet.

WARNING! To prevent electric shock or damage to components, do not attempt to clean your tablet while it is on.

1. Turn off the tablet.
2. Disconnect AC power.
3. Disconnect all powered external devices.

CAUTION: To prevent damage to internal components, do not spray cleaning agents or liquids directly on any tablet surface. Liquids dripped on the surface can permanently damage internal components.

Cleaning the display

Gently wipe the display using a soft, lint-free cloth moistened with an alcohol-free glass cleaner.

Cleaning the sides or back

To clean the sides or back, use a soft microfiber cloth or chamois moistened with one of the cleaning solutions listed previously, or use an acceptable disposable wipe.

NOTE: When cleaning the back of the tablet, use a circular motion to aid in removing dirt and debris.

Traveling with or shipping your tablet

If you have to travel with or ship your tablet, follow these tips to keep your equipment safe.

- Prepare the tablet for traveling or shipping:
  - Back up your information to an external drive.
  - Remove all external media cards, such as memory cards.
  - Turn off and then disconnect all external devices.
  - Shut down the tablet.
- Take along a backup of your information. Keep the backup separate from the tablet.
- When traveling by air, carry the tablet as hand luggage; do not check it in with the rest of your luggage.

  ⚠ **CAUTION:** Avoid exposing a drive to magnetic fields. Security devices with magnetic fields include airport walk-through devices and security wands. Airport conveyer belts and similar security devices that check carry-on baggage use X-rays instead of magnetism and do not damage drives.

- If you plan to use the tablet during a flight, listen for the in-flight announcement that tells you when you are allowed to use your tablet. In-flight tablet use is at the discretion of the airline.
- If you are shipping the tablet , use suitable protective packaging and label the package “FRAGILE.”
- The use of wireless devices may be restricted in some environments. Such restrictions may apply aboard aircraft, in hospitals, near explosives, and in hazardous locations. If you are uncertain of the policy that applies to the use of a wireless device in your tablet, ask for authorization to use your tablet before you turn it on.
- If you are traveling internationally, follow these suggestions:
  - Check the tablet-related customs regulations for each country or region on your itinerary.
  - Check the power cord and adapter requirements for each location in which you plan to use the tablet. Voltage, frequency, and plug configurations vary.

    ⚠ **WARNING!** To reduce the risk of electric shock, fire, or damage to the equipment, do not attempt to power the tablet with a voltage converter kit sold for appliances.

10 Backup and recovery

This chapter provides information about the following processes. The information in the chapter is standard procedure for most products.

- Creating recovery media and backups
- Restoring and recovering your system

For additional information, refer to the HP support assistant app.

▲ Type `support` in the taskbar search box, and then select the **HP Support Assistant** app.

– or –

Select the question mark icon in the taskbar.

IMPORTANT: If you will be performing recovery procedures on a tablet, the tablet battery must be at least 70% charged before you start the recovery process.

IMPORTANT: For a tablet with a detachable keyboard, connect the keyboard to the keyboard dock before beginning any recovery process.

Creating recovery media and backups

The following methods of creating recovery media and backups are available on select products only. Choose the available method according to your model.

- Use HP Recovery Manager to create HP Recovery media after you successfully set up the tablet. This step creates a backup of the HP Recovery partition on the tablet. The backup can be used to reinstall the original operating system in cases where the hard drive is corrupted or has been replaced. For information on creating recovery media, see Creating HP Recovery media (select products only) on page 50. For information on the recovery options that are available using the recovery media, see Using Windows tools on page 51.
- Use Windows tools to create system restore points and create backups of personal information.

  For more information, see Recovering using HP Recovery Manager on page 52.

  NOTE: If storage is 32 GB or less, Microsoft System Restore is disabled by default.

Creating HP Recovery media (select products only)

If possible, check for the presence of the Recovery partition and the Windows partition. From the **Start** menu, select **File Explorer**, and then select **This PC**.

- If your tablet does not list the Windows partition and the Recovery partition, you can obtain recovery media for your system from support. See the *Worldwide Telephone Numbers* booklet included with the tablet. You can also find contact information on the HP website. Go to http://www.hp.com/support, select your country or region, and follow the on-screen instructions.

You can use Windows tools to create system restore points and create backups of personal information, see Using Windows tools on page 51.

- If your tablet does list the Recovery partition and the Windows partition, you can use HP Recovery Manager to create recovery media after you successfully set up the tablet. HP Recovery media can be used to perform system recovery if the hard drive becomes corrupted. System recovery reinstalls the original operating system and software programs that were installed at the factory and then configures the settings for the programs. HP Recovery media can also be used to customize the system or restore the factory image if you replace the hard drive.
  - Only one set of recovery media can be created. Handle these recovery tools carefully, and keep them in a safe place.
  - HP Recovery Manager examines the tablet and determines the required storage capacity for the media that will be required.
  - To create recovery discs, your tablet must have an optical drive with DVD writer capability, and you must use only high-quality blank DVD-R, DVD+R, DVD-R DL, or DVD+R DL discs. Do not use rewritable discs such as CD±RW, DVD±RW, double-layer DVD±RW, or BD-RE (rewritable Blu-ray) discs; they are not compatible with HP Recovery Manager software. Or, instead, you can use a high-quality blank USB flash drive.
  - If your tablet does not include an integrated optical drive with DVD writer capability, but you would like to create DVD recovery media, you can use an external optical drive (purchased separately) to create recovery discs. If you use an external optical drive, it must be connected directly to a USB port on the tablet; the drive cannot be connected to a USB port on an external device, such as a USB hub. If you cannot create DVD media yourself, you can obtain recovery discs for your tablet from HP. See the *Worldwide Telephone Numbers* booklet included with the tablet. You can also find contact information on the HP website. Go to http://www.hp.com/support, select your country or region, and follow the on-screen instructions.
  - Be sure that the tablet is connected to AC power before you begin creating the recovery media.
  - The creation process can take an hour or more. Do not interrupt the creation process.
  - If necessary, you can exit the program before you have finished creating all of the recovery DVDs. HP Recovery Manager will finish burning the current DVD. The next time you start HP Recovery Manager, you will be prompted to continue.

To create HP Recovery media:

IMPORTANT: For a tablet with a detachable keyboard, connect the keyboard to the keyboard dock before beginning these steps.

1. Type `recovery` in the taskbar search box, and then select **HP Recovery Manager**.
2. Select **Create recovery media**, and then follow the on-screen instructions.

If you ever need to recover the system, see Recovering using HP Recovery Manager on page 52.

Using Windows tools

You can create recovery media, system restore points, and backups of personal information using Windows tools.

NOTE: If storage is 32 GB or less, Microsoft System Restore is disabled by default.

For more information and steps, see the Get started app.

▲ Select the **Start** button, and then select the **Get started** app.

Restore and recovery

There are several options for recovering your system. Choose the method that best matches your situation and level of expertise:

IMPORTANT: Not all methods are available on all products.

- Windows offers several options for restoring from backup, refreshing the tablet, and resetting the tablet to its original state. For more information see the Get started app.

  ▲ Select the **Start** button, and then select the **Get started** app.

- If you need to correct a problem with a preinstalled application or driver, use the Reinstall drivers and/or applications option (select products only) of HP Recovery Manager to reinstall the individual application or driver.

  ▲ Type `recovery` in the taskbar search box, select **HP Recovery Manager**, select **Reinstall drivers and/or applications**, and then follow the on-screen instructions.

- If you want to recover the Windows partition to original factory content, you can choose the System Recovery option from the HP Recovery partition (select products only) or use the HP Recovery media. For more information, see Recovering using HP Recovery Manager on page 52. If you have not already created recovery media, see Creating HP Recovery media (select products only) on page 50.

- On select products, if you want to recover the tablet's original factory partition and content, or if you have replaced the hard drive, you can use the Factory Reset option of HP Recovery media. For more information, see Recovering using HP Recovery Manager on page 52.

- On select products, if you want to remove the recovery partition to reclaim hard drive space, HP Recovery Manager offers the Remove Recovery Partition option.

  For more information, see Removing the HP Recovery partition (select products only) on page 55.

Recovering using HP Recovery Manager

HP Recovery Manager software allows you to recover the tablet to its original factory state by using the HP Recovery media that you either created or that you obtained from HP, or by using the HP Recovery partition (select products only). If you have not already created recovery media, see Creating HP Recovery media (select products only) on page 50.

What you need to know before you get started

- HP Recovery Manager recovers only software that was installed at the factory. For software not provided with this tablet, you must either download the software from the manufacturer's website or reinstall the software from the media provided by the manufacturer.

  IMPORTANT: Recovery through HP Recovery Manager should be used as a final attempt to correct issues.

- HP Recovery media must be used if the hard drive fails. If you have not already created recovery media, see Creating HP Recovery media (select products only) on page 50.

- To use the Factory Reset option (select products only), you must use HP Recovery media. If you have not already created recovery media, see Creating HP Recovery media (select products only) on page 50.

- If your tablet does not allow the creation of HP Recovery media or if the HP Recovery media does not work, you can obtain recovery media for your system from support. See the *Worldwide Telephone Numbers* booklet included with the tablet. You can also find contact information from the HP website. Go to http://www.hp.com/support, select your country or region, and follow the on-screen instructions.

IMPORTANT: HP Recovery Manager does not automatically provide backups of your personal data. Before beginning recovery, back up any personal data you want to retain.

Using HP Recovery media, you can choose from one of the following recovery options:

NOTE: Only the options available for your tablet display when you start the recovery process.

- System Recovery—Reinstalls the original operating system, and then configures the settings for the programs that were installed at the factory.
- Factory Reset—Restores the tablet to its original factory state by deleting all information from the hard drive and re-creating the partitions. Then it reinstalls the operating system and the software that was installed at the factory.

The HP Recovery partition (select products only) allows System Recovery only.

Using the HP Recovery partition (select products only)

The HP Recovery partition allows you to perform a system recovery without the need for recovery discs or a recovery USB flash drive. This type of recovery can be used only if the hard drive is still working.

To start HP Recovery Manager from the HP Recovery partition:

IMPORTANT: For a tablet with a detachable keyboard, connect the keyboard to the keyboard dock before beginning these steps (select products only).

1. Type `recovery` in the taskbar search box, select **Recovery Manager**, and then select **HP Recovery Environment**.

   - or-

   For tablets with keyboards attached, press f11 while the tablet boots, or press and hold f11 as you press the power button.

   For tablets without keyboards:

   Turn on or restart the tablet, and then quickly hold down the volume down button; then select f11.
2. Select **Troubleshoot** from the boot options menu.
3. Select **Recovery Manager**, and then follow the on-screen instructions.

Using HP Recovery media to recover

You can use HP Recovery media to recover the original system. This method can be used if your system does not have an HP Recovery partition or if the hard drive is not working properly.

1. If possible, back up all personal files.
2. Insert the HP Recovery media, and then restart the tablet.

   NOTE: If the tablet does not automatically restart in HP Recovery Manager, change the boot order. See Changing the boot order on page 53.
3. Follow the on-screen instructions.

Changing the boot order

If your tablet does not restart in HP Recovery Manager, you can change the boot order, which is the order of devices listed in BIOS where the tablet looks for startup information. You can change the selection to an optical drive or a USB flash drive.

To change the boot order:

IMPORTANT: For a tablet with a detachable keyboard, connect the keyboard to the keyboard dock before beginning these steps.

1. Insert the HP Recovery media.
2. Access BIOS:

   For tablets with keyboards attached:

   ▲ Turn on or restart the tablet, quickly press esc, and then press f9 for boot options.

   For tablets without keyboards:

   ▲ Turn on or restart the tablet, and then quickly hold down the volume down button; then select **f9**.
3. Select the optical drive or USB flash drive from which you want to boot.
4. Follow the on-screen instructions.

Removing the HP Recovery partition (select products only)

HP Recovery Manager software allows you to remove the HP Recovery partition to free up hard drive space.

IMPORTANT: After you remove the HP Recovery partition, you will not be able to perform System Recovery or create HP recovery media from the HP Recovery partition. So before you remove the Recovery partition, create HP Recovery media; see Creating HP Recovery media (select products only) on page 50.

NOTE: The Remove Recovery Partition option is only available on products that support this function.

Follow these steps to remove the HP Recovery partition:

1. Type `recovery` in the taskbar search box, and then select **HP Recovery Manager**.
2. Select **Remove Recovery Partition**, and then follow the on-screen instructions.

11 Computer Setup (BIOS), TPM, and HP Sure Start

Using Computer Setup

Computer Setup, or Basic Input/Output System (BIOS), controls communication between all the input and output devices on the system (such as disk drives, display, keyboard, mouse, and printer). Computer Setup includes settings for the types of devices installed, the startup sequence, and the amount of system and extended memory.

NOTE: Use extreme care when making changes in Computer Setup. Errors can prevent the system from operating properly.

Starting Computer Setup

NOTE: An external keyboard or mouse connected to a USB port can be used with Computer Setup only if USB legacy support is enabled.

To start Computer Setup, follow these steps:

▲ Start Computer Setup.

- Tablets with keyboards:

  ▲ Turn on or restart the tablet, and when the HP logo appears, press f10 to enter Computer Setup.

- Tablets without keyboards:

  ▲ Turn off the tablet. Press the power button in combination with the volume down button until the Startup menu is displayed, and then tap **F10** to enter Computer Setup.

Navigating and selecting in Computer Setup

- To select a menu or a menu item, use the tab key and the keyboard arrow keys and then press enter, or use a pointing device to select the item.

  NOTE: On tablets without keyboards, you can use your finger to make selections.

- To scroll up and down, select the up arrow or the down arrow in the upper-right corner of the screen, or use the up arrow key or the down arrow key on the keyboard.
- To close open dialog boxes and return to the main Computer Setup screen, press esc, and then follow the on-screen instructions.

To exit Computer Setup menus, choose one of the following methods:

- To exit Computer Setup menus without saving your changes:

  Select the **Exit** icon in the lower-right corner of the screen, and then follow the on-screen instructions.

  – or –

  Select **Main**, select **Ignore Changes and Exit**, and then press enter.

- To save your changes and exit Computer Setup menus:

  Select the **Save** icon in the lower-right corner of the screen, and then follow the on-screen instructions.

  – or –

  Select **Main**, select **Save Changes and Exit**, and then press enter.

Your changes go into effect when the tablet restarts.

Restoring factory settings in Computer Setup

NOTE: Restoring defaults will not change the hard drive mode.

To return all settings in Computer Setup to the values that were set at the factory, follow these steps:

1. Start Computer Setup. See Starting Computer Setup on page 56.
2. Select **Main**, and then select **Apply Factory Defaults and Exit**.

   NOTE: On select products, the selections may display **Restore Defaults** instead of **Apply Factory Defaults and Exit**.

3. Follow the on-screen instructions.
4. To save your changes and exit, select the **Save** icon in the lower-right corner of the screen, and then follow the on-screen instructions.

   – or –

   Select **Main**, select **Save Changes and Exit**, and then press enter.

Your changes go into effect when the tablet restarts.

NOTE: Your password settings and security settings are not changed when you restore the factory settings.

Updating the BIOS

Updated versions of the BIOS may be available on the HP website.

Most BIOS updates on the HP website are packaged in compressed files called *SoftPaqs*.

Some download packages contain a file named Readme.txt, which contains information regarding installing and troubleshooting the file.

Determining the BIOS version

To decide whether you need to update Computer Setup (BIOS), first determine the BIOS version on your tablet.

BIOS version information (also known as *ROM date* and *System BIOS*) can be accessed by pressing fn+esc (if you are already in Windows) or by using Computer Setup.

1. Start Computer Setup. See Starting Computer Setup on page 56.
2. Select **Main**, and then select **System Information**.
3. To exit Computer Setup without saving your changes, select the **Exit** icon in the lower-right corner of the screen, and then follow the on-screen instructions.

   – or –

   Select **Main**, select **Ignore Changes and Exit**, and then press enter.

To check for later BIOS versions, see Downloading a BIOS update on page 58.

Downloading a BIOS update

CAUTION: To reduce the risk of damage to the tablet or an unsuccessful installation, download and install a BIOS update only when the tablet is connected to reliable external power using the AC adapter. Do not download or install a BIOS update while the tablet is running on battery power, docked in an optional docking device, or connected to an optional power source. During the download and installation, follow these instructions:

Do not disconnect power on the tablet by unplugging the power cord from the AC outlet.

Do not shut down the tablet or initiate Sleep.

Do not insert, remove, connect, or disconnect any device, cable, or cord.

1. Type `support` in the taskbar search box, and then select the HP Support Assistant app.

   – or –

   Select the question mark icon in the taskbar.
2. Select **Updates**, and then select **Check for updates and messages**.
3. Follow the on-screen instructions.
4. At the download area, follow these steps:
   a. Identify the most recent BIOS update and compare it to the BIOS version currently installed on your tablet. Make a note of the date, name, or other identifier. You may need this information to locate the update later, after it has been downloaded to your hard drive.
   b. Follow the on-screen instructions to download your selection to the hard drive.

      Make a note of the path to the location on your hard drive where the BIOS update is downloaded. You will need to access this path when you are ready to install the update.

NOTE: If you connect your tablet to a network, consult the network administrator before installing any software updates, especially system BIOS updates.

BIOS installation procedures vary. Follow any instructions that are revealed on the screen after the download is complete. If no instructions are revealed, follow these steps:

1. Type `file` in the taskbar search box, and then select **File Explorer**.
2. Select your hard drive designation. The hard drive designation is typically Local Disk (C:).
3. Using the hard drive path you recorded earlier, open the folder that contains the update.
4. Open the file that has an .exe extension (for example, *filename*.exe).

   The BIOS installation begins.
5. Complete the installation by following the on-screen instructions.

NOTE: After a message on the screen reports a successful installation, you can delete the downloaded file from your hard drive.

Changing the boot order using the f9 prompt

To dynamically choose a boot device for the current startup sequence, follow these steps:

1. Access the Boot Device Options menu:
   - Tablets with keyboards:
     - ▲ Turn on or restart the tablet, and when the HP logo appears, press f9 to enter the Boot Device Options menu.
   - Tablets without keyboards:
     - ▲ Turn off the tablet. Press the power button in combination with the volume down button until the Startup menu is displayed, and then tap **F9** to enter the Boot Device Options menu.
2. Select a boot device, then press enter.

TPM BIOS settings (select products only)

IMPORTANT: Before enabling Trusted Platform Module (TPM) functionality on this system, you must ensure that your intended use of TPM complies with relevant local laws, regulations and policies, and approvals or licenses must be obtained if applicable. For any compliance issues arising from your operation/usage of TPM which violates the above mentioned requirement, you shall bear all the liabilities wholly and solely. HP will not be responsible for any related liabilities.

TPM provides additional security. You can modify the TPM settings in Computer Setup (BIOS).

NOTE: If you change the TPM setting to Hidden, TPM is not visible in the operating system.

To access TPM settings in Computer Setup:

1. Start Computer Setup. See Starting Computer Setup on page 56.
2. Select **Security**, select **TPM Embedded Security**, and then follow the on-screen instructions.

Using HP Sure Start (select products only)

Select models are configured with HP Sure Start, a technology that continuously monitors the BIOS for attacks or corruption. If the BIOS becomes corrupted or is attacked, HP Sure Start automatically restores the BIOS to its previously safe state, without user intervention.

HP Sure Start is configured and already enabled so that most users can use the HP Sure Start default configuration. The default configuration can be customized by advanced users.

To access the latest documentation on HP Sure Start, go to http://www.hp.com/support, and select your country. Select **Drivers & Downloads**, and then follow the on-screen instructions.

12 Using HP PC Hardware Diagnostics (UEFI)

HP PC Hardware Diagnostics is a Unified Extensible Firmware Interface (UEFI) that allows you to run diagnostic tests to determine whether the computer hardware is functioning properly. The tool runs outside the operating system so that it can isolate hardware failures from issues that are caused by the operating system or other software components.

When HP PC Hardware Diagnostics (UEFI) detects a failure that requires hardware replacement, a 24-digit Failure ID code is generated. This ID code can then be provided to support to help determine how to correct the problem.

To start HP PC Hardware Diagnostics (UEFI), follow these steps:

1. Start BIOS.
   - Tablets with keyboards
     - ▲ Turn on or restart the tablet, quickly press esc.
   - Tablets without keyboards
     - ▲ Turn off the tablet. Press the power button in combination with the volume down button until the Startup menu is displayed.
2. Press or tap f2.

   The BIOS searches three places for the diagnostic tools, in the following order:

   a. Connected USB drive

   NOTE: To download the HP PC Hardware Diagnostics (UEFI) tool to a USB drive, see Downloading HP PC Hardware Diagnostics (UEFI) to a USB device on page 61.

   b. Hard drive

   c. BIOS
3. When the diagnostic tool opens, select the type of diagnostic test you want to run, and then follow the on-screen instructions.

NOTE: To stop a test, press the button you used to access UEFI.

Downloading HP PC Hardware Diagnostics (UEFI) to a USB device

NOTE: The HP PC Hardware Diagnostics (UEFI) download instructions are provided in English only, and you must use a Windows computer to download and create the HP UEFI support environment because only .exe files are offered.

There are two options to download HP PC Hardware Diagnostics to a USB device.

Download the latest UEFI version

1. Go to http://www.hp.com/go/techcenter/pcdiags. The HP PC Diagnostics home page is displayed.
2. In the HP PC Hardware Diagnostics section, select the **Download** link, and then select **Run**.

Download any version of UEFI for a specific product

1. Go to http://www.hp.com/support, and then select your country. The HP Support page is displayed.
2. Select **Drivers & Downloads**.
3. Use the categories listed to find your product.

   – or –

   Select **Find Now** to let HP automatically detect your product.
4. Select your tablet, and then select your operating system.
5. In the **Diagnostic** section, follow the on-screen instructions to select and download the UEFI version you want.

13 Specifications

Input power

The power information in this section may be helpful if you plan to travel internationally with the tablet.

The tablet operates on DC power, which can be supplied by an AC or a DC power source. The AC power source must be rated at 100–240 V, 50–60 Hz. Although the tablet can be powered from a standalone DC power source, it should be powered only with an AC adapter or a DC power source supplied and approved by HP for use with this tablet.

The tablet can operate on DC power within the following specifications.

Input Power	Rating
Operating voltage and current	12 V dc @ 3 A – 45 W

NOTE: This product is designed for IT power systems in Norway with phase-to-phase voltage not exceeding 240 V rms.

NOTE: The tablet operating voltage and current can be found on the system regulatory label.

Operating environment

Factor	Metric	U.S.
Temperature		
Operating (writing to optical disc)	**5°C to 35°C**	41°F to 95°F
Nonoperating	**-20°C to 60°C**	-4°F to 140°F
Relative humidity (noncondensing)		
Operating	**10% to 90%**	10% to 90%
Nonoperating	**5% to 95%**	5% to 95%
Maximum altitude (unpressurized)		
Operating	**-15 m to 3,048 m**	-50 ft to 10,000 ft
Nonoperating	**-15 m to 12,192 m**	-50 ft to 40,000 ft

14 Electrostatic Discharge

Electrostatic discharge is the release of static electricity when two objects come into contact—for example, the shock you receive when you walk across the carpet and touch a metal door knob.

A discharge of static electricity from fingers or other electrostatic conductors may damage electronic components.

To prevent damage to the computer, damage to a drive, or loss of information, observe these precautions:

- If removal or installation instructions direct you to unplug the computer, first be sure that it is properly grounded.
- Keep components in their electrostatic-safe containers until you are ready to install them.
- Avoid touching pins, leads, and circuitry. Handle electronic components as little as possible.
- Use nonmagnetic tools.
- Before handling components, discharge static electricity by touching an unpainted metal surface.
- If you remove a component, place it in an electrostatic-safe container.

15 Accessibility

HP designs, produces, and markets products and services that can be used by everyone, including people with disabilities, either on a stand-alone basis or with appropriate assistive devices.

Supported assistive technologies

HP products support a wide variety of operating system assistive technologies and can be configured to work with additional assistive technologies. Use the Search feature on your device to locate more information about assistive features.

NOTE: For additional information about a particular assistive technology product, contact customer support for that product.

Contacting support

We are constantly refining the accessibility of our products and services and welcome feedback from users. If you have an issue with a product or would like to tell us about accessibility features that have helped you, please contact us at +1 (888) 259-5707, Monday through Friday, 6 a.m. to 9 p.m. North American Mountain Time. If you are deaf or hard-of-hearing and use TRS/VRS/WebCapTel, contact us if you require technical support or have accessibility questions by calling +1 (877) 656-7058, Monday through Friday, 6 a.m. to 9 p.m. North American Mountain Time.

NOTE: Support is in English only.

Index

A

AC adapter and battery 5
accessibility 65
administrator password 39
antivirus software 44
Audio 29
audio-out (headphone)/audio-in (microphone) combo jack
  identifying 4

B

backups 50
battery
  conserving power 34
  discharging 33, 34
  displaying remaining charge 33
  disposing 34
  low battery levels 33
  replacing 34
battery information, finding 32
battery power 32
BIOS
  determining version 58
  downloading an update 58
  updating 58
Bluetooth
  connecting 21
  device 18
Bluetooth device 21
Bluetooth label 17
boot order
  changing 53
bottom 17
button
  power 5
  volume 28
  volume down 5
  volume up 5

C

camera flash, identifying 8
caring for your tablet 47
cleaning your tablet 47
click area
  left TouchPad 10
  right TouchPad 10
components
  back 8
  display 7
  keyboard base 10
  kickstand 9
Computer Setup
  BIOS administrator password 40
  DriveLock password 42
  navigating and selecting 56
  restoring factory settings 57
connecting to a WLAN 18
corporate WLAN connection 18
critical battery level 30
critical updates, software 45

D

drive media 30
DriveLock
  disabling 43
  enabling 43
DriveLock master password
  changing 44
DriveLock password
  changing 44
  description 42
  entering 44
  setting 42

E

electrostatic discharge 64
embedded numeric keypad, identifying 12
esc key, identifying 12
external AC power, using 34

F

fingerprint reader 45
fingerprint reader, identifying 8
firewall software 44
fn key, identifying 12
four-finger tap TouchPad gesture 25
function keys, identifying 12

G

GPS 21

H

headsets, connecting 29
Hibernation
  exiting 31
  initiating 31
hot keys
  Sleep 13
  using 13
HP Client Security 45
HP Mobile Broadband
  activating 19
  IMEI number 19
  MEID number 19
HP Mobile Connect 20
HP PC Hardware Diagnostics (UEFI)
  using 61
HP Recovery Manager
  correcting boot problems 53
  starting 53
HP Recovery media
  creating 50
  recovery 53
HP Recovery partition
  recovery 53
  removing 55
HP Touchpoint Manager 45

I

IMEI number 19
input power 63
integrated camera flash, identifying 8
integrated webcam light, identifying 7
internal microphones, identifying 4

J

jacks
  audio-out (headphone)/audio-in (microphone) combo 4

K

keyboard base
- components 10
- connecting 15

keypad
- embedded numeric 12

keys
- esc 12
- fn 12
- function 12
- Windows key 12

kickstand, identifying 8

L

labels
- Bluetooth 17
- regulatory 17
- serial number 16
- service 16
- wireless certification 17
- WLAN 17

legacy support, USB 56

lights
- AC adapter and battery light 5
- microphone mute 11
- num lock 11
- TouchPad 11
- webcam 7, 8
- wireless 11

locating information
- hardware 3
- software 3

low battery level 33

M

maintenance
- updating programs and drivers 47

MEID number 19

memory card 30

microphone mute light, identifying 11

microSD card
- inserting 36
- removing 36

microSD card reader, identifying 5

microSD card size 5

minimized image recovery 53

minimized image, creating 52

mobile broadband
- activating 19
- IMEI number 19
- MEID number 19

N

near field communication antenna, identifying 14

NFC antenna, identifying 14

NFC tapping area, identifying 14

NFC, using 21

num lock light 11

O

one-finger slide touch screen gesture 24

operating environment 63

original system recovery 52

P

passwords
- administrator 39
- BIOS administrator 40
- DriveLock 42
- user 39

pen components, identifying 27

pen loop slot, identifying 5

pen, pairing 27

POGO pin connector, identifying 5

ports
- USB 3.0 charging (powered) 5
- USB Type-C (Thunderbolt-enabled) 5

power
- battery 32
- options 30

power button, identifying 5

power-saving states 30

product name and number, tablet 16

public WLAN connection 18

R

readable media 30

recover
- options 52

recovery
- discs 51, 53
- HP Recovery Manager 52
- media 53
- starting 53
- supported discs 51
- system 52
- USB flash drive 53
- using HP Recovery media 51

recovery media
- creating 50
- creating using HP Recovery Manager 51

recovery partition
- removing 55

regulatory information
- regulatory label 17
- wireless certification labels 17

S

security cable slot, identifying 5

serial number 16

serial number, tablet 16

service labels, locating 16

setting password protection on wakeup 31

setting power options 30

setup utility
- navigating and selecting 56
- restoring factory settings 57

shipping the tablet 49

shutdown 30

SIM card
- inserting 5
- removing 5

SIM card slot, identifying 5

Sleep
- exit 5
- exiting 30
- initiate 5
- initiating 30

slots
- microSD card reader 5
- security cable 5
- SIM card 5
- smart card 14

smart card
- slot 14

software
- antivirus 44
- critical updates 45
- firewall 44

sound settings, using 29

speakers
connecting 28
identifying 4
supported discs, recovery 51
Sure Start
using 60
system recovery 52
system restore point
creating 51
system restore point, creating 50

T

tap TouchPad and touch screen gesture 23
three-finger swipe TouchPad gesture 25
touch screen gestures
one-finger slide 24
TouchPad
click area 10
using 23
TouchPad and touch screen gestures
tap 23
two-finger pinch zoom 23
TouchPad gestures
four-finger tap 25
three-finger swipe 25
two-finger scroll 24
two-finger tap 24
TouchPad light, identifying 10, 11
TouchPad zone
identifying 10
TPM settings 59
traveling with the tablet 17, 49
turning off the tablet 30
two-finger pinch zoom TouchPad and touch screen gesture 23
two-finger scroll TouchPad gesture 24
two-finger tap TouchPad gesture 24

U

unresponsive system 30
updating programs and drivers 47
USB 3.0 charging (powered), identifying 5
USB legacy support 56
USB Type-C (Thunderbolt-enabled) port, identifying 5
user password 39
using
external AC power 34
power-saving states 30
using sound settings 29
using the TouchPad 23

V

video 29
volume
adjusting 28
button 28
keys 28
volume button, identifying 5

W

webcam 7
identifying 8
using 28
webcam light, identifying 7
webcam, identifying 7
WiGig antenna, identifying 7
Windows
system restore point 50, 51
Windows key, identifying 12
Windows tools
using 51
wireless certification label 17
wireless controls
operating system 18
wireless light 11
wireless network (WLAN)
connecting 18
corporate WLAN connection 18
functional range 19
public WLAN connection 18
WLAN antennas, identifying 7
WLAN device 17
WLAN label 17
writable media 30
WWAN antennas, identifying 7
WWAN device 18, 19

Z

ZIF expansion slot, identifying 5