FCC Part 96.47 Test Report

Applicant	:	**Rolling Wireless S.a r.l.**
Equipment	:	**5G Module**
Brand Name	:	**Rolling Wireless**
Model Name	:	**RW135R-GL**
FCC ID	:	**2AX2URW135RGL**
Standard	:	**FCC Part 96.47**
Test Date(s)	:	**May 19, 2026**

We, Sporton International Inc. (Kunshan), would like to declare that the tested sample has been evaluated in accordance with the test procedures and has been in compliance with the applicable technical standards.
The test results in this report apply exclusively to the tested model / sample. Without written approval of Sporton International Inc. (Kunshan), the test report shall not be reproduced except in full.

Jason Jia

Approved by: Jason Jia

ACCREDITED
Cert #5145.02

Sporton International Inc. (Kunshan)
No. 1098, Pengxi North Road, Kunshan Economic Development Zone Jiangsu Province 215300 People's Republic of China

Table of Contents

1 GENERAL DESCRIPTION 5

1.1 APPLICANT 5

1.2 MANUFACTURER 5

1.3 PRODUCT FEATURE OF EQUIPMENT UNDER TEST 5

1.4 PRODUCT SPECIFICATION OF EQUIPMENT UNDER TEST 5

1.5 TESTING LOCATION 6

1.6 TEST SOFTWARE 6

1.7 APPLICABLE STANDARDS 6

2 TEST CONFIGURATION OF EQUIPMENT UNDER TEST 7

2.1 CONNECTION DIAGRAM OF TEST SYSTEM 7

3 END USER DEVICE ADDITIONAL REQUIREMENT 8

3.1 TEST REQUIREMENT 8

3.2 TEST PROCEDURE 8

3.3 TEST RESULT 9

4 LIST OF MEASURING EQUIPMENT 11

5 MEASUREMENT UNCERTAINTY 12

History of this test report

Report No.	Version	Description	Issued Date
FG642201P	01	Initial issue of report	Jun. 18, 2026

Summary of Test Result

Report Clause	Ref Std. Clause	Test Items	Result (PASS/FAIL)	Remark
3	96.47	End User Device additional requirement	Pass	-

Disclaimer:
The product specifications of the EUT presented in the test report that may affect the test assessments are declared by the manufacturer who shall take full responsibility for the authenticity.

1 General Description

1.1 Applicant

Rolling Wireless S.a r.l.
8-10, rue Mathias Hardt 1717, Luxembourg

1.2 Manufacturer

Rolling Wireless S.a r.l.
8-10, rue Mathias Hardt 1717, Luxembourg

1.3 Product Feature of Equipment Under Test

Product Feature	
Equipment	5G Module
Brand Name	Rolling Wireless
Model Name	RW135R-GL
FCC ID	2AX2URW135RGL
IMEI Code	359200990001748
EUT Stage	Identical Prototype

Remark: The above EUT's information was declared by manufacturer. Please refer to the specifications or user's manual for more detailed description.

1.4 Product Specification of Equipment Under Test

Standards-related Product Specification	
Tx/Rx Frequency	5G NR n48: 3550 MHz ~ 3700 MHz
Antenna Type	PIFA Antenna
Antenna Gain	1.0 dBi
Type of Modulation	DFT-s-OFDM (PI/2 BPSK / QPSK / 16QAM / 64QAM / 256QAM) CP-OFDM (QPSK / 16QAM / 64QAM / 256QAM)

Remark: 5G n48 support both 5G Redcap and 5G NR SA modes. 5G NR SA is chosen to perform testing and can represent 5G Redcap.

1.5 Testing Location

Sporton International Inc. (Kunshan) is accredited to ISO/IEC 17025:2017 by American Association for Laboratory Accreditation with Certificate Number 5145.02.

Test Firm	Sporton International Inc. (Kunshan)		
Test Site Location	No. 1098, Pengxi North Road, Kunshan Economic Development Zone Jiangsu Province 215300 People's Republic of China TEL : +86-512-57900158		
Test Site No.	**Sporton Site No.**	**FCC Designation No.**	**FCC Test Firm Registration No.**
	DFS01-KS	CN1257	314309
Test Engineer	Carry Xu		
Temperature	20 ~ 24.5 ℃		
Relative Humidity	40 ~ 60 %		

1.6 Test Software

Item	Site	Manufacturer	Name	Version
1.	DFS01-KS	Sporton	DFS & Adaptivity Test Tools	1.0

1.7 Applicable Standards

- FCC Part 96.47
- FCC KDB 940660 D01 Part 96 CBRS Eqpt v03r01
- WINNF-TS-0122-V1.0.2 CBRS CBSD Test Specification

Remark: All test items were verified and recorded according to the standards and without any deviation during the test.

2 Test Configuration of Equipment Under Test

2.1 Connection Diagram of Test System

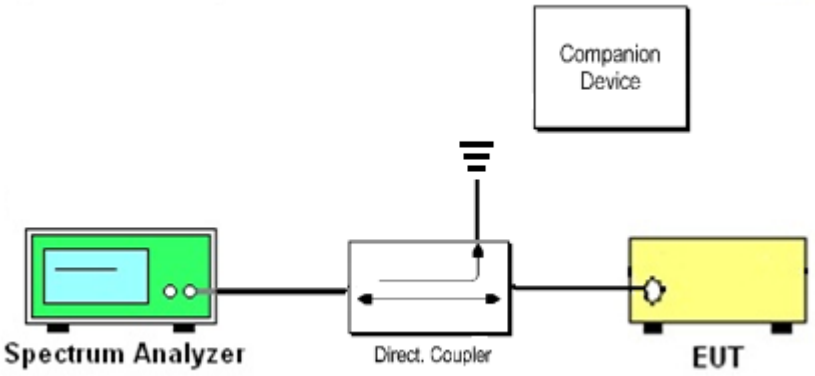

The companion device is certified CBRS (FCC ID: WBK-RU4370)

3 End User Device additional requirement

3.1 Test Requirement

FCC Part 96.47

(a) End User Devices may operate only if they can positively receive and decode an authorization signal transmitted by a CBSD, including the frequencies and power limits for their operation.

(1) An End User Device must discontinue operations, change frequencies, or change its operational power level within 10 seconds of receiving instructions from its associated CBSD.

3.2 Test Procedure

Following procedure can be done by applying WINNF-TS-0122-V1.0.2 CBRS CBSD Test Specification, use the certified Ruckus CBSD (FCC ID: PIDAS2900) as companion device to show compliance with Part 96.47 requirement for End User Device (EUD):

1. Setup with frequency 3600-3620MHz and power level 17dBm/MHz
2. Enable AP service from Ruckus Cloud management
3. Check EUD Tx Frequency and power
4. Disable AP service from Ruckus Cloud management
    a. Check EUD stops transmission within 10seconds.

5. Setup with 3670-3690MHz & power level 7dBm/MHz
6. Enable AP service from Ruckus Cloud management
7. Check EUD Tx Frequency and power
8. Disable AP service from Ruckus Cloud management
    a. Check EUD stops transmission within 10seconds.

3.3 Test Result

[Step 1] Setup with frequency 3600-3620MHz and power level 17dBm/MHz

[Step 3] Check EUD Tx Frequency and power

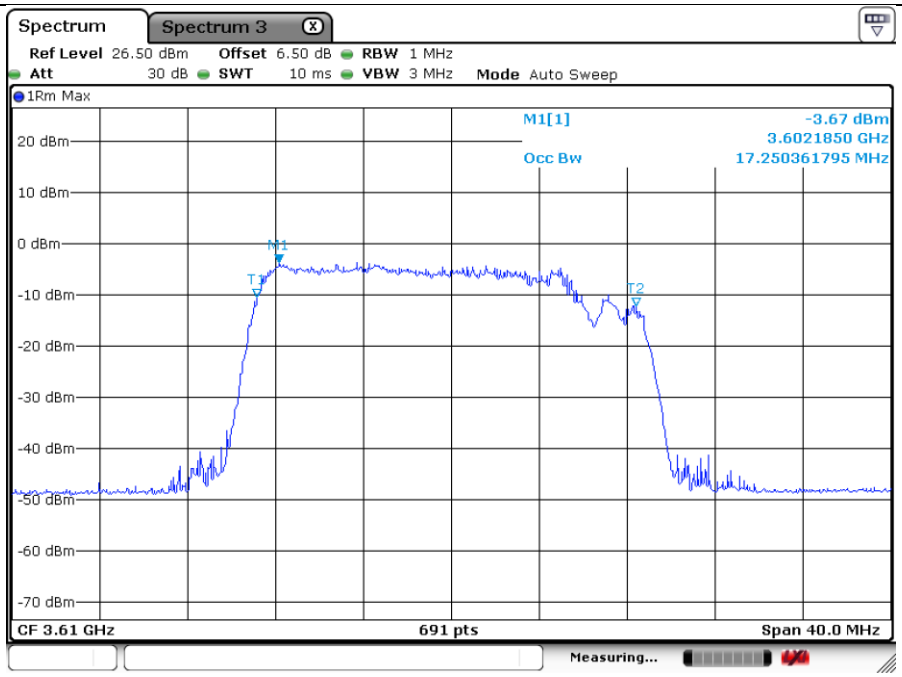

Date: 19.MAY.2026 14:49:55

[Step 4.a.] EUD stops transmission within 10 seconds of receiving instructions from its associated CBSD.

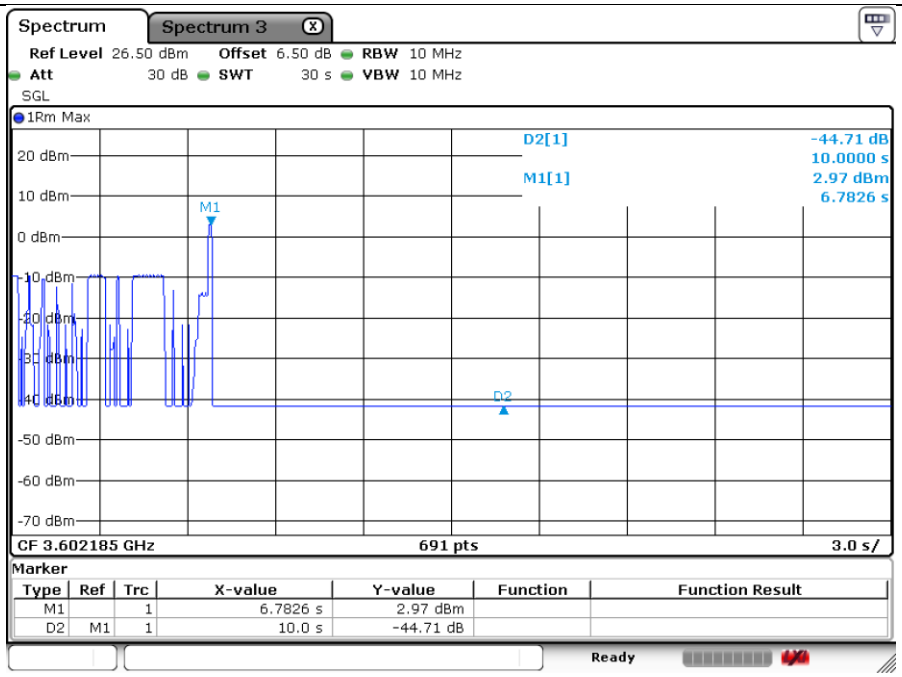

Date: 19.MAY.2026 14:52:27

[Step 5] Setup with 3670-3690MHz & power level 7dBm/MHz

[Step 7] Check EUD Tx Frequency and power

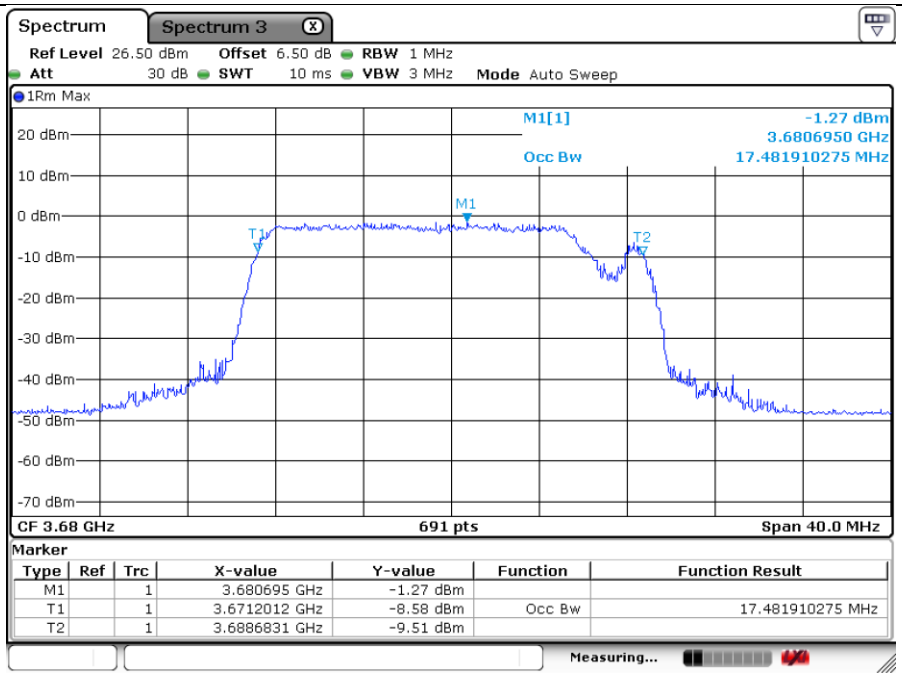

[Step 8.a.] After changing the frequency and power level,

The module (EUT) discontinues operations, change frequencies, or change its operational power level within 10 seconds of receiving instructions from its associated CBSD. Test result is PASS.

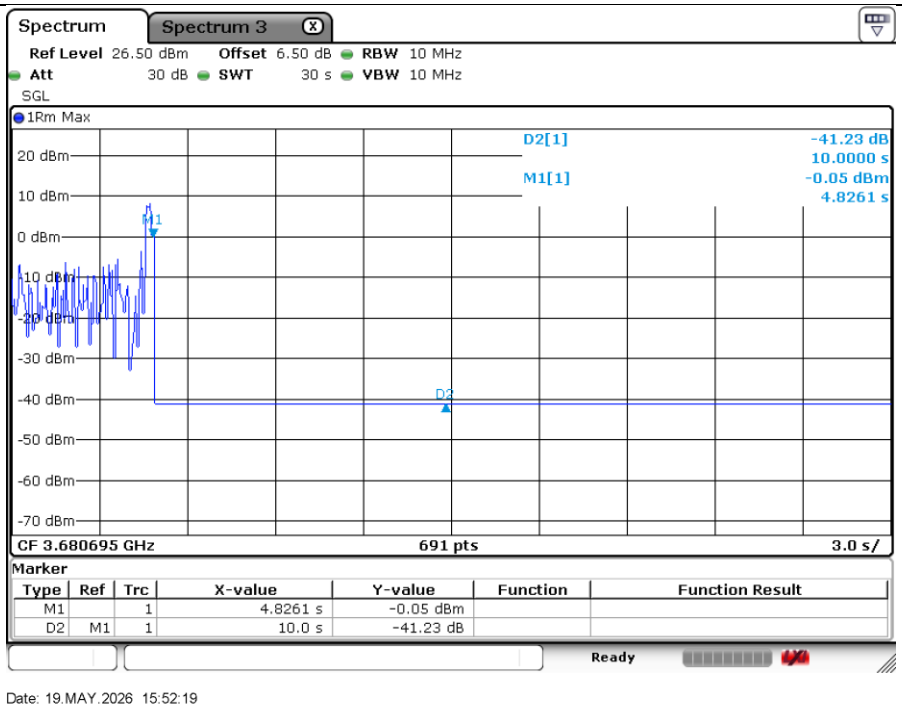

4 List of Measuring Equipment

Instrument	Manufacturer	Model No.	Serial No.	Characteristics	Calibration Date	Test Date	Due Date	Remark
Signal Analyzer	R&S	FSV7	101472	10Hz~7GHz	Aug. 26, 2025	May 19, 2026	Aug. 25, 2026	Conducted (DFS01-KS)
Combiner	MTJ Cooperation	MTJ7114-M	N/A	0.5GHz~18GHz	NCR	May 19, 2026	NCR	Conducted (DFS01-KS)

5 Measurement Uncertainty

Uncertainty of Conducted Measurement

Conducted Generated signal Levels	**±0.56 dB**
Conducted Time	**0.38%**

---------- THE END ----------