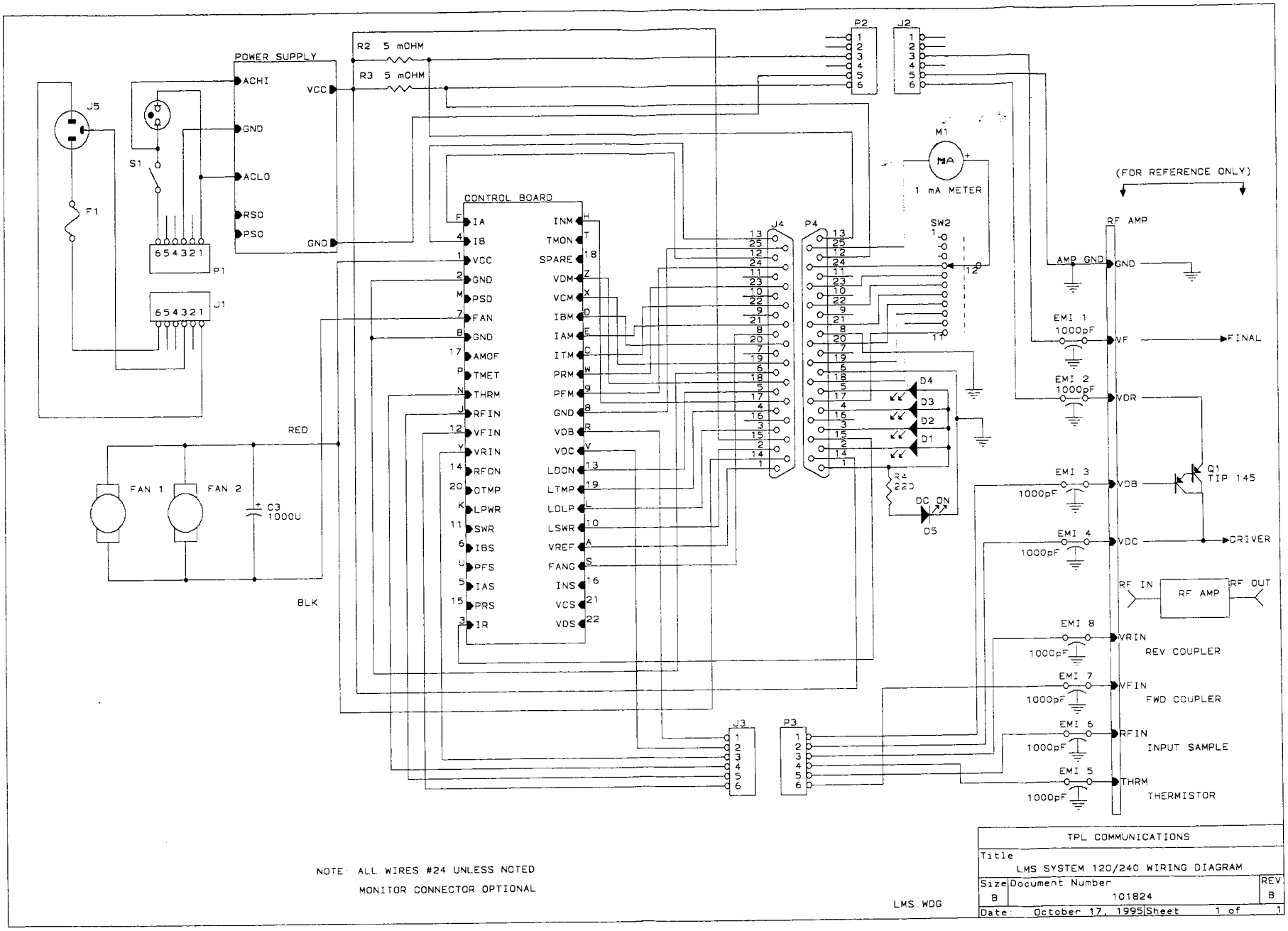

NOTE: ALL WIRES #24 UNLESS NOTED
MONITOR CONNECTOR OPTIONAL

LMS.WDG

TPL COMMUNICATIONS		
Title: LMS SYSTEM 120/240 WIRING DIAGRAM		
Size: B	Document Number: 101824	REV: B
Date: October 17, 1995	Sheet 1 of 1	

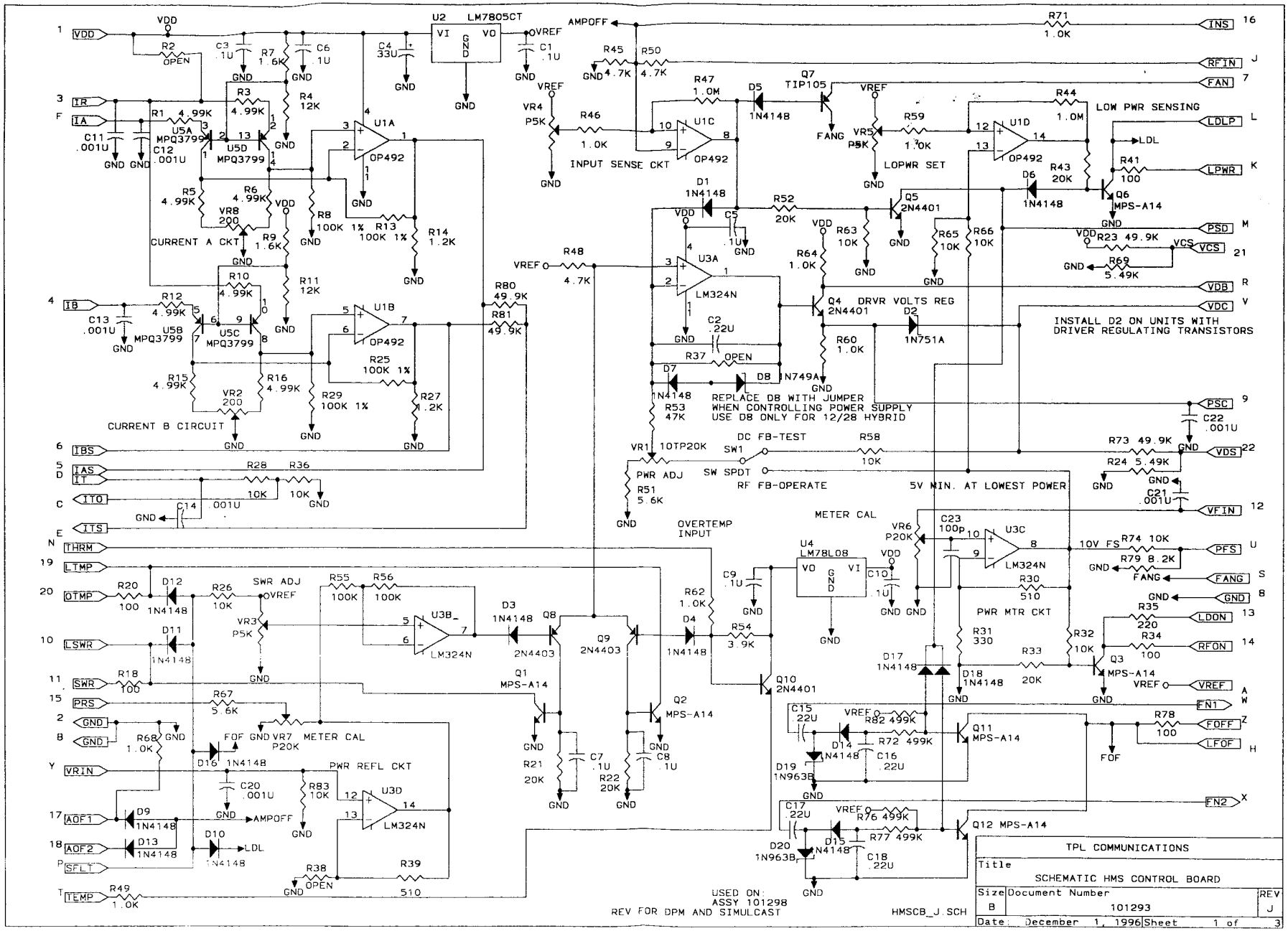
U2 LM7805CT
VI GND VO
VDD
VREF
AMPOFF
INS
RFIN
FAN
LDLP
LDL
LPWR
PSD
VCS
VDB
VDC
PSC
VDS
VFIN
PFS
FANG
GND
LDON
RFON
VREF
FN1
FOFF
LFOF
FN2
IR
IA
IB
IBS
IAS
IT
ITO
ITS
THRM
LTMP
OTMP
LSWR
SWR
PRS
VRIN
AOF1
AOF2
SFLT
TEMP
U1A OP492
U1B OP492
U1C OP492
U1D OP492
U3A LM324N
U3B LM324N
U3C LM324N
U3D LM324N
U4 LM78L08
U5A MPQ3799
U5B MPQ3799
U5C MPQ3799
U5D MPQ3799
Q1 MPS-A14
Q2 MPS-A14
Q3 MPS-A14
Q4 2N4401
Q5 2N4401
Q6 MPS-A14
Q7 TIP105
Q8 2N4403
Q9 2N4403
Q10 2N4401
Q11 MPS-A14
Q12 MPS-A14
CURRENT A CKT
CURRENT B CIRCUIT
INPUT SENSE CKT
LOPWR SET
LOW PWR SENSING
DRVR VOLTS REG
INSTALL D2 ON UNITS WITH DRIVER REGULATING TRANSISTORS
REPLACE D8 WITH JUMPER WHEN CONTROLLING POWER SUPPLY USE D8 ONLY FOR 12/28 HYBRID
DC FB-TEST
SW SPDT
RF FB-OPERATE
PWR ADJ
5V MIN. AT LOWEST POWER
OVERTEMP INPUT
METER CAL
PWR MTR CKT
SWR ADJ
PWR REFL CKT
USED ON: ASSY 101298
REV FOR DPM AND SIMULCAST
HMSCB_J.SCH
TPL COMMUNICATIONS
Title
SCHEMATIC HMS CONTROL BOARD
Size B
Document Number 101293
REV J
Date: December 1, 1996
Sheet 1 of 3