SP 320/SP 325 series

User Guide

Guide to the Machine 1

Loading Paper 2

Printing Documents 3

Copying Originals 4

Scanning Originals 5

Sending and Receiving a Fax 6

Configuring the Machine Using the Control Panel 7

Configuring the Machine Using Utilities 8

Maintaining the Machine 9

Troubleshooting 10

Appendix 11

For safe and correct use, be sure to read "Safety Information" before using the machine.

TABLE OF CONTENTS

How to Read This Manual 8
Introduction 8
Legal Prohibition 8
Disclaimer 8
Note to Administrator 9
About IP Address 9
Differences in Performance/Functions between Different Models 9
Model-Specific Information 10
Important Safety Instructions Region A 11
User Information on Electrical & Electronic Equipment 11
Environmental Advice for Users 12
Note for the Battery and/or Accumulator Symbol (For EU countries only) 13
Notes to Users of Facsimile Unit 13
NOTICE TO USERS (NEW ZEALAND) 13
Important Safety Instructions Region B 15
Notes to Users in the State of California 15
ENERGY STAR Program 16
Saving Energy 16

1. Guide to the Machine

Guide to Components 19
Exterior 19
Interior 21
Control Panel 21
Installing the Printer 24
Where to Put the Printer 24
Installing the Driver and Software 28
Quick Install for USB 28
Quick Install for Network 28
Upgrading or Deleting the Printer Driver 29
About Operation Tools 30
Initial Setup 31
Initial Setup 31
Changing Operation Modes 32

Multi-access..... 32

2. Loading Paper

Supported Paper..... 35
Non-Recommended Paper Types..... 37
Print Area..... 38
Loading Paper..... 41
Loading Paper into Tray 1..... 41
Loading Paper into Bypass Tray..... 44
Loading Envelopes..... 45
Specifying Paper Type and Paper Size Using Control Panel..... 48
Placing Originals..... 51
About Originals..... 51
Placing Originals on the Exposure Glass..... 53

3. Printing Documents

Basic Operation..... 55
Canceling a Print Job..... 55
If a Paper Mismatch Occurs..... 57
Continuing Printing Using Mismatched Paper..... 57
Resetting the Print Job..... 58
Using Various Print Functions..... 59
Print Quality Functions..... 59
Print Output Functions..... 60

4. Copying Originals

Copier Mode Screen..... 63
Basic Operation..... 64
Canceling a Copy..... 65
Making Enlarged or Reduced Copies..... 67
Specifying Reduce/Enlarge..... 67
Making Combined/2-sided Copies..... 69
Specifying Combined and 2-sided Copies..... 72
Copying Both Sides of an ID Card onto One Side of Paper..... 74
Copying an ID Card..... 75
Specifying the Scan Settings..... 78

Adjusting Image Density....78
Selecting the Document Type According to Original....78

5. Scanning Originals

Scanner Mode Screen....81
Registering Scan Destinations....82
Modifying Scan Destinations....87
Deleting Scan Destinations....88
Basic Operation....89
Scan to E-mail/FTP/Folder....89
Specifying the Scan Settings....93
Specifying the Scanning Size According to the Size of the Original....93
Adjusting Image Density....94
Specifying Resolution....94
Scanning from a Computer....96
TWAIN Scanning....96
Basic Operation for WIA Scanning....98

6. Sending and Receiving a Fax

Fax Mode Screen....99
Setting the Date and Time....100
Entering Characters....101
Registering Fax Destinations....103
Registering Fax Destinations Using the Control Panel....103
Registering Fax Destinations Using Web Image Monitor....105
Sending a Fax....108
Selecting Transmission Mode....108
Basic Operation for Sending a Fax....109
Specifying the Fax Destination....112
Useful Sending Functions....116
Specifying the Scan Settings....118
Using the Fax Function from a Computer (LAN-Fax)....121
Basic Operation for Sending Faxes from a Computer....121
Configuring Transmission Settings....123
Configuring the LAN-Fax Address Book....123

Editing a Fax Cover Sheet..... 126
Receiving a Fax..... 127
Selecting Reception Mode..... 127
Lists/Reports Related to Fax..... 130

7. Configuring the Machine Using the Control Panel

Basic Operation..... 131
Menu Chart..... 133
Copier Features Settings..... 134
Scanner Features Settings..... 138
Fax Transmission Features Settings..... 140
Fax Features Settings..... 142
Address Book Settings..... 146
System Settings..... 147
Printing Lists/Reports..... 153
Printing the Configuration Page..... 153
Types of Lists/Reports..... 153
Printer Features Settings..... 155
Network Settings..... 159
Wireless LAN Setup (Type 2 model only)..... 162
IPv6 Automatic Settings..... 164
IPv6 Manual Settings..... 164
Administrator Settings..... 166

8. Configuring the Machine Using Utilities

Using Web Image Monitor..... 171
Displaying Top Page..... 172
Changing the Interface Language..... 173
Checking the System Information..... 174
Status Tab..... 174
Counter Tab..... 175
Machine Information Tab..... 176
Configuring the System Settings..... 177
Sound Volume Adjustment Tab..... 177
Tray Paper Settings Tab..... 177

Copier Tab....179
Fax Tab....179
Priority Tray Tab....180
Toner Management Tab....180
I/O Timeout Tab....181
Shortcut to Function Tab....181
Registering Destinations....182
Configuring the Network Settings....183
Network Status Tab....183
IPv6 Configuration Tab....184
Network Application Tab....184
DNS Tab....185
Auto E-mail Notification Tab....186
SNMP Tab....187
SMTP Tab....188
POP3 Tab....189
Wireless Tab (Type 2 model only)....189
Configuring the IPsec Settings....192
IPsec Global Settings Tab....192
IPsec Policy List Tab....192
Printing Lists/Reports....196
Configuring the Administrator Settings....197
Administrator Tab....197
Rest Settings Tab....197
Backup Setting Tab....198
Restore Setting Tab....199
Set Date/Time Tab....199
Energy Saver Mode Tab....200

9. Maintaining the Machine

Replacing the Print Cartridge....201
Cautions When Cleaning....205
Cleaning the Friction Pad and Paper Feed Roller....206
Cleaning the Exposure Glass and ADF....208

Cleaning the Exposure Glass..... 208
Cleaning the ADF..... 208

10. Troubleshooting

Common Problems..... 209
Paper Feed Problems..... 211
Removing Printing Jams..... 213
Removing Scanning Jams..... 221
Print Quality Problems..... 223
Checking the Condition of the Machine..... 223
Printer Problems..... 224
Print Positions Do Not Match Display Positions..... 225
Copier Problems..... 226
Scanner Problems..... 228
Fax Problems..... 229
Error and Status Messages on the Screen..... 232

11. Appendix

Functions and Network Settings Available in an IPv6 Environment..... 241
Available Functions..... 241
Transmission Using IPsec..... 242
Encryption and Authentication by IPsec..... 242
Security Association..... 243
Encryption Key Exchange Settings Configuration Flow..... 243
Specifying Encryption Key Exchange Settings..... 244
Specifying IPsec Settings on the Computer..... 244
Enabling and Disabling IPsec Using the Control Panel..... 247
Notes About the Toner..... 248
Moving and Transporting the Machine..... 249
Disposal..... 249
Where to Inquire..... 250
Consumables..... 251
Print Cartridge..... 251
Specifications of the Machine..... 252
General Function Specifications..... 252

Printer Function Specifications....253
Copier Function Specifications....254
Scanner Function Specifications....255
Fax Function Specifications....255
Copyright Information about Installed Applications....257
expat....257
JPEG LIBRARY....257
OpenLDAP 2.1....257
OpenSSL 0.9.8g....258
Trademarks....261
INDEX....263

How to Read This Manual

Introduction

This manual contains detailed instructions and notes on the operation and use of this machine. For your safety and benefit, read this manual carefully before using the machine. Keep this manual in a handy place for quick reference.

Legal Prohibition

Do not copy or print any item for which reproduction is prohibited by law.

Copying or printing the following items is generally prohibited by local law:

bank notes, revenue stamps, bonds, stock certificates, bank drafts, checks, passports, driver's licenses.

The preceding list is meant as a guide only and is not inclusive. We assume no responsibility for its completeness or accuracy. If you have any questions concerning the legality of copying or printing certain items, consult with your legal advisor.

Disclaimer

Contents of this manual are subject to change without prior notice. In no event will the company be liable for direct, indirect, special, incidental, or consequential damages as a result of handling or operating the machine.

To the maximum extent permitted by applicable laws, in no event will the manufacturer be liable for any damages whatsoever arising out of failures of this machine, losses of the registered data, or the use or non-use of this product and operation manuals provided with it.

Make sure that you always copy or have backups of the data registered in this machine. Documents or data might be erased due to your operational errors or malfunctions of the machine.

In no event will the manufacturer be responsible for any documents created by you using this machine or any results from the data executed by you.

For good output quality, the manufacturer recommends that you use genuine toner from the manufacturer.

The manufacturer shall not be responsible for any damage or expense that might result from the use of parts other than genuine parts from the manufacturer with your office products.

Two kinds of size notation are employed in this manual.

Some illustrations or explanations in this guide may differ from your product due to improvement or change in the product.

Note to Administrator

Password

Certain configurations of this machine can be password-protected to prevent unauthorized modifications by others. We strongly recommend you to create your own password immediately.

The following are the operations that can be password-protected:

- Entering the [Address Book], [Network Settings], or [Admin. Tools] menu using the control panel

  You can access these menus without a password by factory default.

  The setting for creating a password can be found in [Admin. Tools].

- Configuring the machine using Web Image Monitor

  You can configure the machine using Web Image Monitor without a password by factory default. The setting for creating a password can be found in [Administrator Settings].

  For details about creating passwords, see page 166 "Administrator Settings" or page 197 "Configuring the Administrator Settings".

About IP Address

In this manual, "IP address" covers both IPv4 and IPv6 environments. Read the instructions that are relevant to the environment you are using.

Model-Specific Information

This section explains how you can identify the region your machine belongs to.

There is a label on the rear of the machine, located in the position shown below. The label contains details that identify the region your machine belongs to. Read the label.

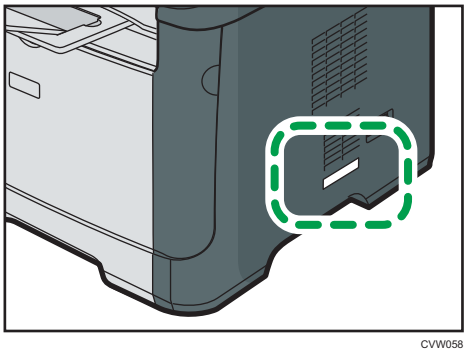

CVW058

The following information is region-specific. Read the information under the symbol that corresponds to the region of your machine.

Region A (mainly Europe and Asia)

If the label contains the following, your machine is a region A model:

- CODE XXXX -27
- 220-240V

Region B (mainly North America)

If the label contains the following, your machine is a region B model:

- CODE XXXX -17
- 120V

Note

- Dimensions in this manual are given in two units of measure: metric and inch. If your machine is a Region A model, refer to the metric units. If your machine is a Region B model, refer to the inch units.

Important Safety Instructions Region A

User Information on Electrical & Electronic Equipment

Users in the countries where this symbol shown in this section has been specified in national law on collection and treatment of E-waste

Our Products contain high quality components and are designed to facilitate recycling.

Our products or product packaging are marked with the symbol below.

The symbol indicates that the product must not be treated as municipal waste. It must be disposed of separately via the appropriate return and collection systems available. By following these instructions you ensure that this product is treated correctly and help to reduce potential impacts on the environment and human health, which could otherwise result from inappropriate handling. Recycling of products helps to conserve natural resources and protect the environment.

For more detailed information on collection and recycling systems for this product, please contact the shop where you purchased it, your local dealer or sales/service representatives.

All Other Users

If you wish to discard this product, please contact your local authorities, the shop where you bought this product, your local dealer or sales/service representatives.

For Users in India

This product complies with the "India E-waste Rule 2011" and prohibits use of lead, mercury, hexavalent chromium, polybrominated biphenyls or polybrominated diphenyl ethers in concentrations exceeding 0.1 weight % and 0.01 weight % for cadmium, except for the exemptions set in Schedule 2 of the Rule.

Environmental Advice for Users

Users in the EU, Switzerland and Norway

Consumables yield

Please refer to either the User's Manual for this information or the packaging of the consumable.

Recycled paper

The machine can use recycled paper which is produced in accordance with European standard EN 12281:2002 or DIN 19309. For products using EP printing technology, the machine can print on 64g/m^2 paper, which contains less raw materials and represents a significant resource reduction.

Duplex printing (if applicable)

Duplex printing enables both sides of a sheet of paper to be used. This saves paper and reduces the size of printed documents so that fewer sheets are used. We recommend that this feature is enabled whenever you print.

Toner and ink cartridge return program

Toner and ink cartridge for recycling will be accepted free of charge from users in accordance with local regulations.

For details about the return program, please refer to the Web page below or consult your service person.

https://www.ricoh-return.com/

Energy efficiency

The amount of electricity a machine consumes depends as much on its specifications as it does on the way you use it. The machine is designed to allow you to reduce electricity costs by switching to Ready mode after it prints the last page. If required, it can immediately print again from this mode.

If no additional prints are required and a specified period of time passes, the device switches to an energy saving mode.

In these modes, the machine consumes less power (watts). If the machine is to print again, it needs a little longer to return from an energy saving mode than from Ready mode.

For maximum energy savings, we recommend that the default setting for power management is used.

Products that comply with the Energy Star requirement are always energy efficient.

Note for the Battery and/or Accumulator Symbol (For EU countries only)

In accordance with the Battery Directive 2006/66/EC Article 20 Information for end-users Annex II, the above symbol is printed on batteries and accumulators.

This symbol means that in the European Union, used batteries and accumulators should be disposed of separately from your household waste.

In the EU, there are separate collection systems for not only used electrical and electronic products but also batteries and accumulators.

Please dispose of them correctly at your local community waste collection/recycling centre.

Notes to Users of Facsimile Unit

CE

Declaration of Conformity

Notice to Users in EEA Countries

This product complies with the essential requirements and provisions of Directive 1999/5/EC of the European Parliament and of the Council of 9 March 1999 on radio equipment and telecommunications terminal equipment and the mutual recognition of their conformity.

Notice to Users Accessing Analog PSTN in EEA Countries

This product is designed to be able to access analog PSTN in all EEA countries. Local PSTN compatibility is dependent on software switch settings. Please contact your service representative if relocating this product to another country. In the event of problems, please contact your service representative in the first instance.

The CE Declaration of Conformity is available by accessing the URL:

http://www.ricoh.co.jp/fax/ce_doc/ and selecting the product applicable.

NOTICE TO USERS (NEW ZEALAND)

- The grant of a Telepermit for any item of terminal equipment indicates only that Telecom has accepted that the item complies with minimum conditions for connection to its network. It indicates no endorsement of the product by Telecom, nor does it provide any sort of warranty. Above all, it provides no assurance that any item will work correctly in all respects with another item of

Telepermitted equipment of a different make or model, nor does it imply that any product is compatible with all of Telecom's network services.

- This equipment is not capable, under all operating conditions, of correct operation at the higher speeds for which it is designed. Telecom will accept no responsibility should difficulties arise in such circumstances.
- Devices connected to the telephone port may lose their memory if this fax machine is on line for extended periods. To prevent this, such devices should have the facility for battery or similar backup of memory.
- This device may be subject to ringing or bell tinkle when certain other devices are connected to the same line. If this occurs, the problem should not be referred to the Telecom Faults Service.
- This equipment should not be used under any circumstances that may constitute a nuisance to other Telecom customers.
- Telepermitted equipment only may be connected to the auxiliary telephone port. The auxiliary telephone port is not specifically designed for 3-wire connected equipment that may not respond to incoming ringing when attached to this port.

Important Safety Instructions Region B

Notes to Users in the State of California

Perchlorate Material - special handling may apply. See: www.dtsc.ca.gov/hazardouswaste/perchlorate

ENERGY STAR Program

ENERGY STAR® Program Requirements for Imaging Equipment

The ENERGY STAR® Program Requirements for Imaging Equipment encourage energy conservation by promoting energy efficient computers and other office equipment.

The program backs the development and dissemination of products that feature energy saving functions.

It is an open program in which manufacturers participate voluntarily.

Targeted products are computers, monitors, printers, facsimiles, copiers, scanners, and multifunction devices. Energy Star standards and logos are internationally uniform.

Saving Energy

This machine is equipped with the following Energy Saver modes: Energy Saver mode 1 and Energy Saver mode 2. If the machine has been idle for a certain period of time, the machine automatically enters Energy Saver mode.

The machine recovers from Energy Saver mode when it receives a print job, prints a received fax, or when any key is pressed.

Energy Saver mode 1

The machine enters Energy Saver mode 1 if the machine has been idle for about 30 seconds. It takes less time to recover from Energy Saver mode 1 than from power-off state or Energy Saver mode 2, but power consumption is higher in Energy Saver mode 1 than in Energy Saver mode 2.

Energy Saver mode 2

The machine enters Energy Saver mode 2 after the period of time specified for this setting is passed. Power consumption is lower in Energy Saver mode 2 than in Energy Saver mode 1, but it takes longer to recover from Energy Saver mode 2 than from Energy Saver mode 1.

Specifications

Energy Saver mode 1	Power Consumption	50 W or less
	Default Time	30 seconds
	Recovery Time	10 seconds or less
Energy Saver mode 2	Power Consumption	5.0 W or less
	Default Time	1 minute
	Recovery Time	20 seconds

For details about Energy Saver modes, see page 166 "Administrator Settings".

Note

- Even if Energy Saver mode 2 is enabled, the machine will not enter Energy Saver mode 2 for two hours if Low Humidity Mode is enabled. However, the machine will enter Energy Saver mode 1 as normal (even when Energy Saver mode 1 is not enabled).
- For details about Low Humidity Mode, see page 147 "System Settings".

1. Guide to the Machine

Guide to Components

This section introduces the names of the various parts on the front and rear side of the machine and outlines their functions.

Exterior

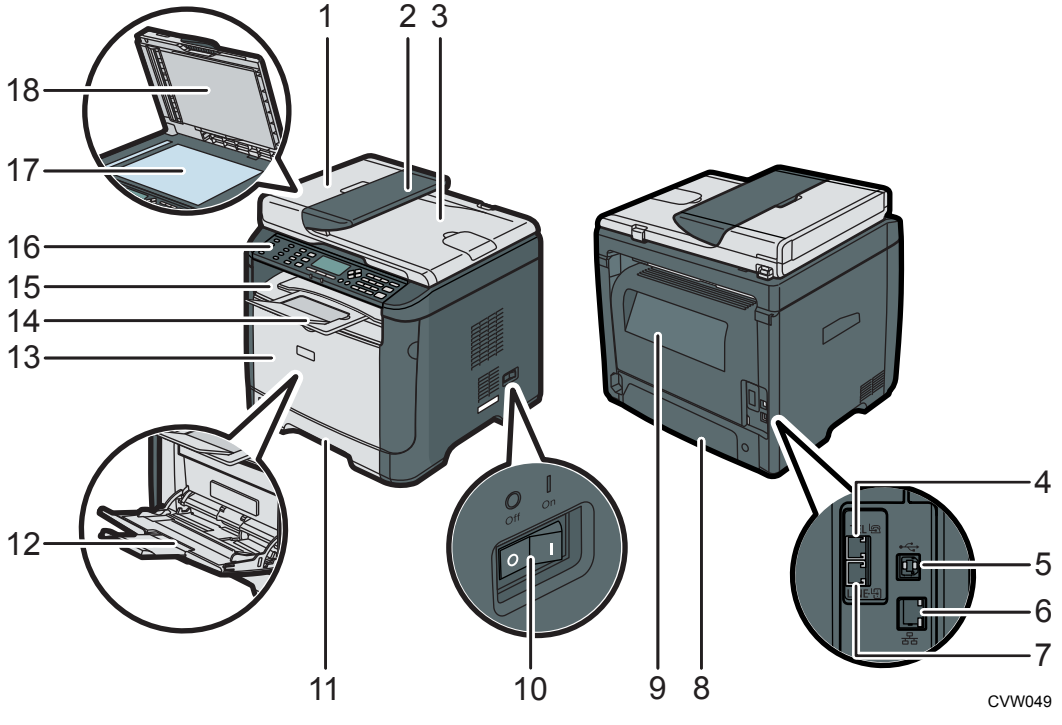

1. **ADF Cover**

   Open this cover to remove originals jammed in the ADF.

2. **Input Tray for the ADF**

   Place stacks of originals here. They will feed in automatically. This tray can hold up to 35 sheets of plain paper.

3. **Auto Document Feeder (Exposure Glass Cover)**

   The ADF is integrated with the exposure glass cover. Open this cover to place documents on the exposure glass.

4. **External Telephone Connector**

   For connecting an external telephone.

5. **USB Port**

   For connecting the machine to a computer using a USB cable.

6. **Ethernet Port**

   For connecting the machine to the network using a network interface cable.

7. **G3 (analog) Line Interface Connector**

   For connecting a telephone line.

8. **Tray 1 Rear Cover**

   Remove this cover when loading paper longer than A4 in Tray 1.

9. **Rear Cover**

   Open this cover to remove jammed paper or when printing on envelopes.

10. **Power Switch**

    Use this switch to turn the power on or off.

11. **Tray 1**

    This tray can hold up to 250 sheets of plain paper.

12. **Bypass Tray**

    This tray can hold up to 50 sheets of plain paper.

13. **Front Cover**

    Open this cover to replace the print cartridge or remove jammed paper.

14. **Stop Fences**

    Raise this fence to prevent paper from falling off.

15. **Standard Tray**

    Printed paper is output here. Up to 50 sheets of plain paper can be stacked here.

16. **Control Panel**

    Contains a screen and keys for machine control.

17. **Exposure Glass**

    Place originals here sheet by sheet.

18. **Cover for the Exposure Glass**

    Open this cover to place originals on the exposure glass.

Interior

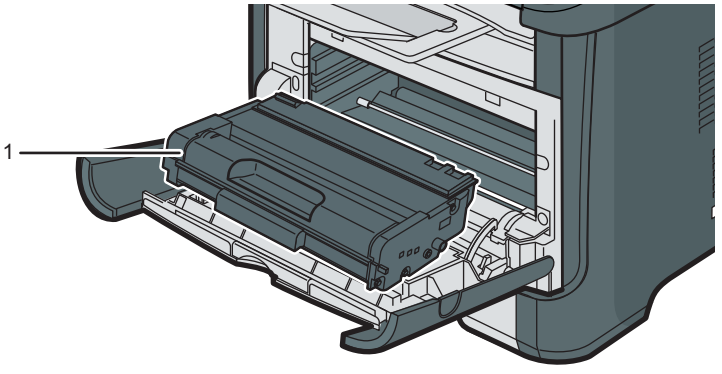

1. **Print Cartridge**

   A replacement consumable that is required to make prints on paper. It needs to be replaced when the Toner/Paper End indicator flashes red. For details about replacing the cartridge, see page 201 "Replacing the Print Cartridge".

Control Panel

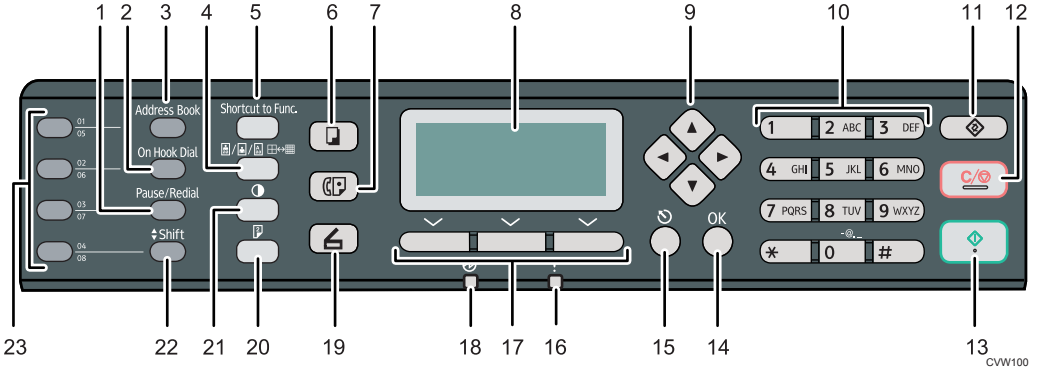

1. **[Pause/Redial] key**

   Press to insert a pause in a fax number or to display the last used scan or fax destination.

2. **[On Hook Dial] key**

   Press to use on-hook dialing to check the destination's status when sending a fax.

3. **[Address Book] key**

   Press to select a scan or fax destination from the Address Book.

4. **[Image Quality] key**

   Press to select the scan quality for the current job.

5. **[Shortcut to Func.] key**

   Press to use the function pre-assigned to this key.

6. **[Copy] key**

   Press to switch the machine to copier mode.

7. **[Facsimile] key**

   Press to switch the machine to fax mode.

8. **Screen**

   Displays the current status and messages.

9. **Scroll Keys**

   Press to move the cursor in the direction indicated by the key.

10. **Number Keys**

    Press to enter numerical values when specifying settings such as fax numbers and copy quantities or to enter letters when specifying names.

11. **[User Tools] key**

    Press to display the menu for configuring the machine's system settings.

12. **[Clear/Stop] key**

    Press to cancel or stop print jobs, document copying, scanning, fax transmission/reception, and other actions in progress.

13. **[Start] key**

    Press to start fax transmission/reception, scanning, or copying.

14. **[OK] Key**

    Press to confirm settings and specified values, or to move to the next menu level.

15. **[Escape] key**

    Press to cancel the last operation or to return to the previous level of the menu tree.

16. **Alert Indicator**

    This indicator lights up red when the machine runs out of paper or consumables, when the paper settings do not match the settings specified by the driver, or when other errors occur. It flashes yellow when the toner is nearly empty.

17. **Selection keys**

    Press the key underneath an item shown on the bottom line of the screen to select it.

18. **Power Indicator**

    This indicator lights up blue when the machine is turned on. It flashes when a print job is received and during printing, scanning, or fax transmission/reception.

19. **[Scanner] key**

    Press to switch the machine to scanner mode.

20. **[Duplex] key**

    Press to print on both sides of paper.

21. **[Density] key**

    Press to adjust the image density for the current job.

22. **[Shift] key**

    Press to use the Quick Dial numbers 5 to 8 when specifying a scan or fax destination using the One Touch buttons.

23. **One Touch buttons**

    Press to select a scan or fax Quick Dial destination.

Installing the Printer

This section describes how to install the printer and perform settings after installation.

Where to Put the Printer

The printer's location should be carefully chosen because environmental conditions greatly affect its performance.

⚠WARNING

- Do not use flammable sprays or solvents in the vicinity of this machine. Doing so could result in fire or electric shock.

⚠WARNING

- Do not place vases, plant pots, cups, toiletries, medicines, small metal objects, or containers holding water or any other liquids, on or close to this machine. Fire or electric shock could result from spillage or if such objects or substances fall inside this machine.

⚠CAUTION

- Keep the machine away from humidity and dust. Otherwise a fire or an electric shock might occur.

⚠CAUTION

- Do not place the machine on an unstable or tilted surface. If it topples over, an injury might occur.

⚠CAUTION

- Do not place heavy objects on the machine. Doing so can cause the machine to topple over, possibly resulting in injury.

⚠CAUTION

- Keep the machine in an area that is within optimum environmental conditions. Operating the machine in an environment that is outside the recommended ranges of humidity and temperature can cause an electrical fire hazard. Keep the area around the socket free of dust. Accumulated dust can become an electrical fire hazard.

⚠CAUTION

- Make sure the room where you are using the machine is well ventilated and spacious. Good ventilation is especially important when the machine is used heavily.

⚠CAUTION

- Do not obstruct the machine's vents. Doing so risks fire caused by overheated internal components.

⚠CAUTION

- Keep the machine away from salt-bearing air and corrosive gases. Also, do not install the machine in places where chemical reactions are likely (laboratories, etc.), as doing so will cause the machine to malfunction.

Space Required for Installation

The recommended (or minimum) space requirements are as follows:

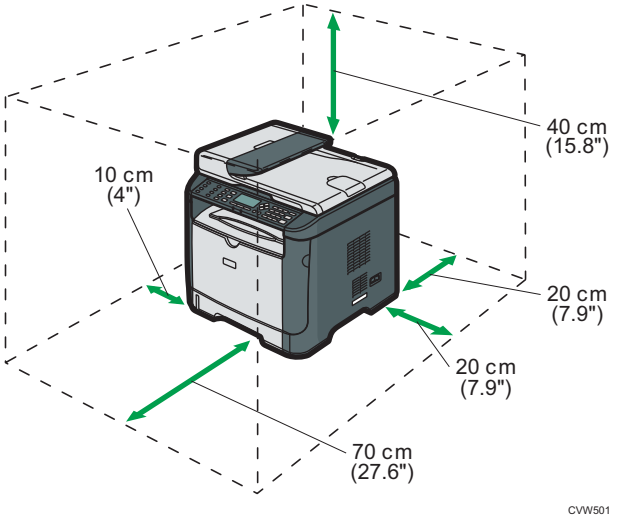

Optimum Environmental Conditions

Permissible and recommended temperature and humidity ranges are as follows:

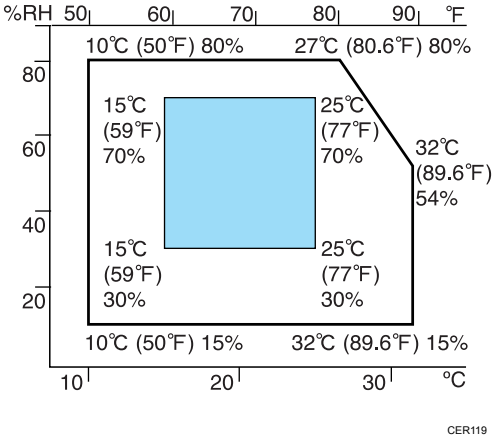

- White area: Permissible Range
- Blue area: Recommended Range

To avoid possible build-up of ozone, locate this machine in large well ventilated room that has an air turnover of more than 30m^3/hr/person.

Environments to Avoid

Important

- Areas exposed to direct sunlight or strong light
- Dusty areas
- Areas with corrosive gases
- Areas that are excessively cold, hot, or humid
- Areas directly exposed to currents of hot, cold, or room-temperature air from air conditioners
- Areas directly exposed to radiant heat from heaters
- Locations near air conditioners or humidifiers
- Locations near other electronic equipment
- Locations subject to frequent strong vibration

Ventilation

When you use this machine in a confined space without good ventilation for a long time or print large quantities, you might detect an odd smell.

This might cause the output paper to also have an odd smell.

When you detect an odd smell, regularly ventilate in order to keep the workplace comfortable.

- Set up the machine so that it does not directly ventilate towards people.
- Ventilation should be more than 30 m^3/hr/person.

New machine smell

When a machine is new, it might have a unique smell. This smell will subside in about one week.

When you detect an odd smell, sufficiently ventilate and circulate the air in the room.

Power requirements

- Region A 220 - 240 V, 4 A, 50/60 Hz
- Region B 120 V, 7 A, 60 Hz

Please be sure to connect the power cord to a power source as above.

Installing the Driver and Software

You can install the necessary driver for this machine using the included CD-ROM.

The supplied drivers are supported by the following operating systems:

- PCL 6 printer driver: Windows XP/Vista/7/8 and Windows Server 2003/ 2003 R2/2008/2008 R2/2012
- TWAIN driver: Windows XP/Vista/7/8 and Windows Server 2003/ 2003 R2/2008/2008 R2/2012
- WIA driver: Windows XP/Vista/7/8 and Windows Server 2003/ 2003 R2/2008/2008 R2/2012
- LAN-Fax driver: Windows XP/Vista/7/8 and Windows Server 2003/ 2003 R2/2008/2008 R2/2012

The procedure in this section is an example based on Windows 7. The actual procedure may vary depending on the operating system you are using.

Important

- **Be sure to disconnect the USB cable or Ethernet cable from the machine and turn the machine off before beginning the installation.**

Quick Install for USB

Use Quick Install to install the printer driver, TWAIN driver, WIA driver, and LAN-Fax driver from the CD-ROM.

1. **Close all applications except this manual.**
2. **Insert the CD-ROM into the CD-ROM drive.**
3. **Select a language for the interface, and then click [OK].**
4. **From the CD-ROM menu, click [USB Quick Install].**
5. **Follow the instructions in the installation wizard.**

Quick Install for Network

Use Quick Install to install the printer driver, TWAIN driver, WIA driver, and LAN-Fax driver from the CD-ROM.

1. **Close all applications except this manual.**
2. **Insert the CD-ROM into the CD-ROM drive.**
3. **Select a language for the interface, and then click [OK].**

4. From the CD-ROM menu, click [Network Quick Install].
5. Follow the instructions in the installation wizard.

Upgrading or Deleting the Printer Driver

Upgrading the printer driver

1. On the [Start] menu, click [Devices and Printers].
2. Right-click the icon of the printer model you want to modify, and then click [Printer properties].
3. Click the [Advanced] tab.
4. Click [New Driver...], and then click [Next].
5. Click [Have Disk...].
6. Click [Browse...], and then select the printer driver location.
7. Click [OK], and then specify the printer model.
8. Click [Next].
9. Click [Finish].
10. Click [OK] to close the printer properties window.
11. Restart the computer.

Deleting the printer driver

1. On the [Start] menu, click [Devices and Printers].
2. Right-click the icon of the printer you want to delete, and then click [Remove device].
3. Click [Yes].
4. Click any printer icon, and then click [Print server properties].
5. Click the [Drivers] tab.
6. Click [Change Driver Settings] if it is displayed.
7. Click [Remove...].
8. Select [Remove driver and driver package.], and then click [OK].
9. Click [Yes].
10. Click [Delete].
11. Click [OK].
12. Click [Close] to close the print server properties window.

About Operation Tools

This section explains the operation tools of this machine.

Control Panel

The control panel contains a screen and keys for controlling the machine. They allow you to configure the machine's various settings.

For details about how to use the control panel, see page 131 "Configuring the Machine Using the Control Panel".

Web Image Monitor

You can check the machine's status and configure its settings by accessing the machine directly using Web Image Monitor.

For details about how to use Web Image Monitor, see page 171 "Configuring the Machine Using Utilities".

Initial Setup

Initial Setup

When you turn on the machine for the first time, a menu for configuring the settings described below will appear on the display. This section describes how to complete the Initial Setup.

Important

- Region B: The fax number code is required by international law. You cannot legally connect a fax machine to the telephone system if the fax number code is not programmed. Also, the fax header code and the date and time of transmission must be included in the header of all pages faxed to, from, or within the United States.
- Make sure to select the correct code for the country of use. Selecting the wrong country code may cause failures in fax transmissions.

Display language

The language selected here is used for the display.

User fax number

The number entered here is used as the fax number of the machine. The user fax number can contain 0 to 9, space, and "+".

User name

The name entered here is used as the name of the fax sender.

Country code

The country code selected here is used for configuring the time and date display formats, and the settings related to fax transmissions with appropriate default values for the country of use.

Press the [▲] or [▼] key to select the item you want to configure, and enter the number or name (up to 20 digits or characters) if necessary, then press the [OK] key.

For details about entering characters, see page 101 "Entering Characters".

Note

- You can change the settings configured during the Initial Setup later under [Admin. Tools]. In addition, you can set the machine's time and date under [Admin. Tools]. For details about [Admin. Tools], see page 166 "Administrator Settings".
- When the [Print Fax Header] setting under fax transmission settings is turned on, the registered user fax number, user name, and time and date of transmission appear on the header of every fax you send. For details about [Print Fax Header], see page 140 "Fax Transmission Features Settings".

Changing Operation Modes

You can switch between copier, scanner, and fax modes by pressing the corresponding keys.

Press the [Copy], [Scanner], or [Facsimile] key to activate each mode. While in each mode, the corresponding key lights up.

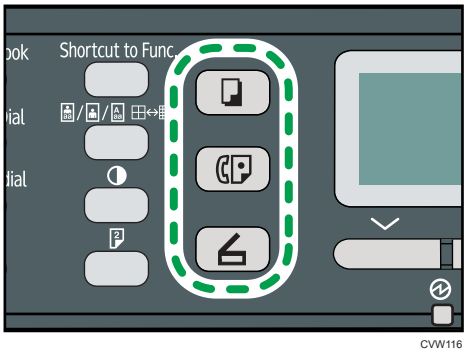

CVW116

Function Priority

By default, copy mode is selected when the machine is turned on, or if the preset [System Auto Reset Timer] time passes with no operation while the initial screen of the current mode is displayed. You can change the selected mode using [Function Priority] under [Admin. Tools].

For details about [System Auto Reset Timer] or [Function Priority], see page 166 "Administrator Settings".

Multi-access

This machine can perform multiple jobs using different functions, such as copying and faxing, at the same time. Performing multiple functions simultaneously is called “Multi-access”.

The following table shows the functions that can be performed simultaneously.

Current job	Job that you want to execute simultaneously
Copying	• Fax memory transmission • Fax memory reception • Receiving a print job from a computer (the actual printing starts after copying is finished) • Receiving a LAN-Fax job from a computer • LAN-Fax transmission

Current job	Job that you want to execute simultaneously
Scanning	• Fax memory transmission • Fax immediate printing • Fax memory reception • Printing a fax received in the machine's memory • Printing • Receiving a LAN-Fax job from a computer • LAN-Fax transmission
Scanning a fax into the machine's memory before transmission	• Fax memory transmission • Fax immediate printing • Fax memory reception • Printing a fax received in the machine's memory • Printing • Receiving a LAN-Fax job from a computer
Fax immediate transmission (scanning an original and sending it simultaneously)	• Printing a fax received in the machine's memory • Printing • Receiving a LAN-Fax job from a computer
Fax memory transmission (sending a fax that has already been stored in the machine's memory)	• Copying • Scanning • Scanning a fax into the machine's memory before transmission • Printing a fax received in the machine's memory • Printing • Receiving a LAN-Fax job from a computer
Fax immediate printing (receiving a fax and printing it simultaneously)	• Scanning *1 • Scanning a fax into the machine's memory before transmission • Receiving a LAN-Fax job from a computer
Fax memory reception (storing a received fax into the machine's memory)	• Copying • Scanning • Scanning a fax into the machine's memory before transmission • Receiving a LAN-Fax job from a computer

Current job	Job that you want to execute simultaneously
Printing a fax received in the machine's memory	• Scanning *1 • Scanning a fax into the machine's memory before transmission • Fax immediate transmission • Fax memory transmission • Receiving a LAN-Fax job from a computer • LAN-Fax transmission
Printing	• Scanning • Scanning a fax into the machine's memory before transmission • Fax immediate transmission • Fax memory transmission • LAN-Fax transmission
Receiving a LAN-Fax job from a computer	• Copying • Scanning • Fax immediate printing • Fax memory reception • Printing a fax received in the machine's memory • LAN-Fax transmission
LAN-Fax transmission	• Copying • Scanning • Scanning a fax into the machine's memory before transmission • Printing a fax received in the machine's memory • Printing • Receiving a LAN-Fax job from a computer

*1 Fax printing may take longer than normal if you scan using the control panel at the same time, especially when scanning multiple pages using the exposure glass.

Note

- If you try to use a function that cannot be performed simultaneously, you will hear a beep sound from the machine or see a failure message pop up on your computer screen. In this case, try again after the current job is finished.

2. Loading Paper

Supported Paper

Paper Size

- A4
- $8^1/_2$ " × 11 " (Letter)
- $8^1/_2$ " × 14 " (Legal)
- B5 JIS
- $5^1/_2$ " × $8^1/_2$ " (Half Letter)
- $7^1/_4$ " × $10^1/_2$ " (Executive)
- A5
- A6
- B6 JIS
- 16K (195 ×267 mm)
- 8"×13"(F)
- $8^1/_2$ "×13"(Foolscap)
- $8^1/_4$ "×13"(Folio)
- Com10 (104.8×241.3 mm)
- Monarch (98.4×190.5 mm)
- C5 Env (162×229 mm)
- C6 Env (114×162 mm)
- DL Env (110×220 mm)
- Custom Paper Size

  The following paper sizes are supported as custom paper sizes:

  - Approximately 90-216 mm (3.6-8.5 inches) in width
  - Approximately 148-356 mm (5.8-14 inches) in length

Note

- If it is difficult to take printed paper out of the output tray, you can lift the control panel and make it easier to take the printed paper out.

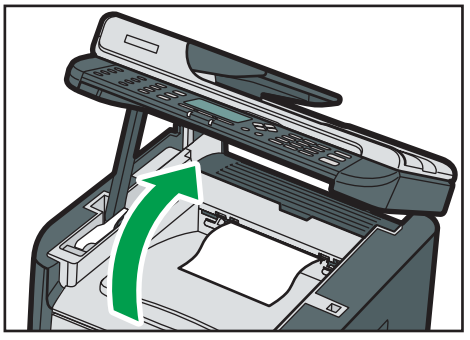

CVW056

Paper Type

- Plain paper (65-99 g/m^2 (17-27 lb.))
- Recycled paper (75-90 g/m^2 (20-24 lb.))
- Thin paper (52-64 g/m^2 (14-16 lb.))
- Thick paper1 (100-130 g/m^2 (27-35 lb))
- Thick paper2 (131-162 g/m^2 (35-43 lb))
- Color paper (75-90 g/m^2 (20-24 lb.))
- Preprinted paper (75-90 g/m^2 (20-24 lb.))
- Prepunched paper (75-90 g/m^2 (20-24 lb.))
- Letterhead (100-130 g/m^2 (27-35 lb.))
- Bond paper (105-160 g/m^2 (28-43 lb.))
- Cardstock (100-130 g/m^2 (27-35 lb.))
- Label paper (100-130 g/m^2 (27-35 lb.))
- Envelope

Paper Capacity

- Tray1

  250 sheets

  (80 g/m^2, 20 lb.)
- Bypass Tray

  50 sheets

  (80 g/m^2, 20 lb.)

Non-Recommended Paper Types

Do not use the following types of paper:

- Ink-jet printer paper
- Bent, folded, or creased paper
- Curled or twisted paper
- Torn paper
- Wrinkled paper
- Damp paper
- Dirty or damaged paper
- Paper that is dry enough to emit static electricity
- Paper that has already been printed onto, except a preprinted letterhead paper.

  Malfunctions are especially likely when using paper printed on by other than a laser printer (e.g.monochrome and color copiers, ink-jet printers, etc.)
- Special paper, such as thermal paper and carbon paper
- Paper weighing heavier or lighter than the limit
- Paper with windows, holes, perforations, cutouts, or embossing
- Adhesive label paper on which glue or base paper is exposed
- Paper with clips or staples

Note

- When loading paper, take care not to touch the surface of the paper.
- Even if paper is adequate for the machine, poorly stored paper can cause paper misfeeds, print quality degradation, or malfunctions.

Print Area

The diagram below shows the area of the paper that the machine can print on.

From the printer driver

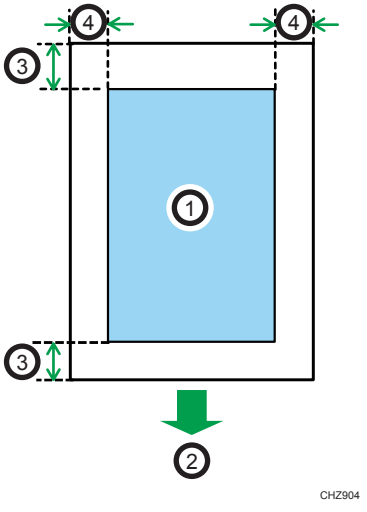

1. **Print area**
2. **Feed direction**
3. **Approx. 4.2 mm (0.2 inches)**
4. **Approx. 4.2 mm (0.2 inches)**

Envelope

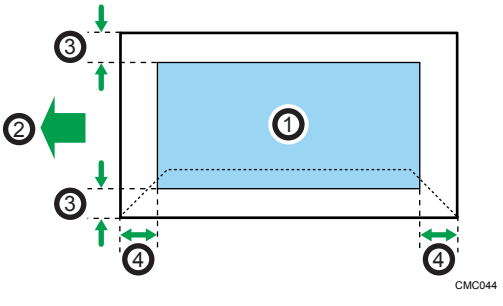

1. **Print area**
2. **Feed direction**
3. **Approximately 10 mm (0.4 inches)**
4. **Approximately 10 mm (0.4 inches)**

Note

- The print area may vary depending on the paper size, printer language and printer driver settings.
- For better envelope printing, we recommend you set the right, left, top, and bottom print margins to at least 15 mm (0.6 inches) each.

Copier function

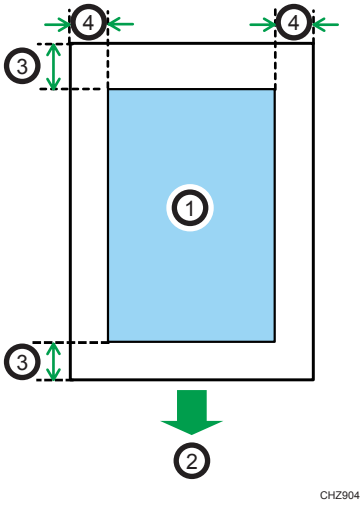

1. **Print area**
2. **Feed direction**
3. **Approx. 4 mm (0.2 inches)**
4. **Approx. 3 mm (0.1 inches)**

Note

- The print area may vary depending on the paper size.

Fax function

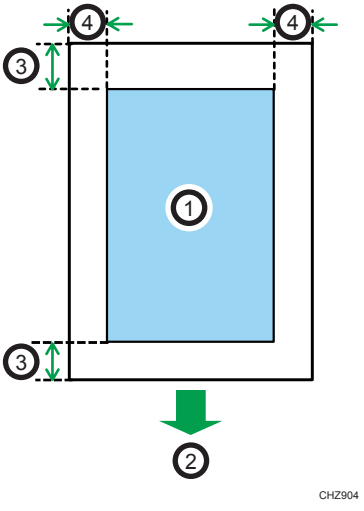

1. **Print area**
2. **Feed direction**
3. **Approx. 4.2 mm (0.2 inches)**
4. **Approx. 2 mm (0.08 inches)**

Note

- The print area may vary depending on the paper size.

Loading Paper

Loading Paper into Tray 1

The following example explains loading procedure for the standard paper tray (Tray 1).

Important

- Before printing on paper other than envelopes, make sure to pull up the levers on the machine rear, inside the rear cover. Leaving the levers lowered can cause print quality problems when printing on paper other than envelopes.

1. **Pull out tray 1 carefully with both hands.**

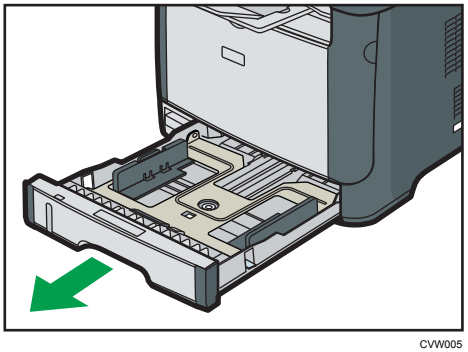

CVW005

Place the tray on a flat surface.

2. **Pinch the clip on the side paper guide and slide it to match the standard size.**

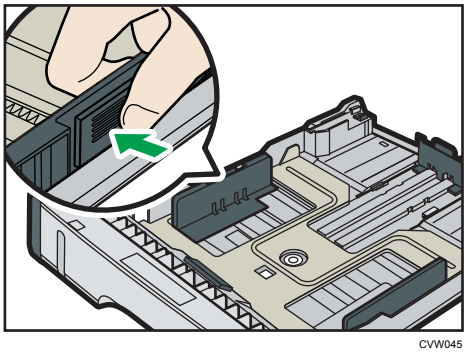

CVW045

When loading custom size paper, position the paper guide slightly wider than the actual paper size.

3. **Pinch the end paper guide and slide it inward to match the standard size.**

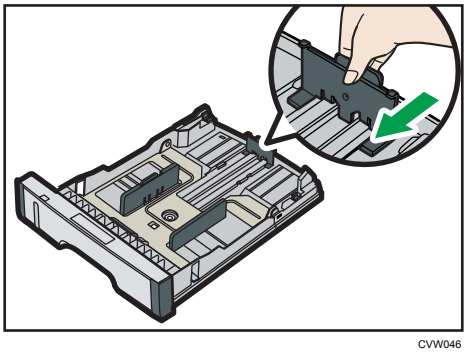

CVW046

When loading custom size paper, position the paper guide slightly wider than the actual paper size.

4. **Load the new paper stack print side down.**

Make sure paper is not stacked higher than the upper limit marked inside the tray.

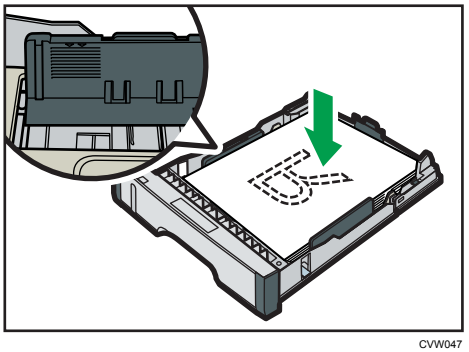

CVW047

Slide the guides inward, until they are flush against the paper's sides.

Make sure the paper is not stacked higher than the projection on the side paper guides.

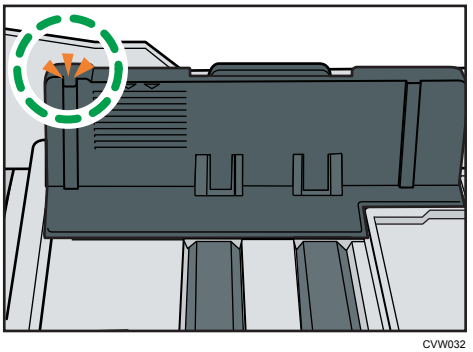

CVW032

5. **Check there are no gaps between the paper and the paper guides; both side and end paper guides.**

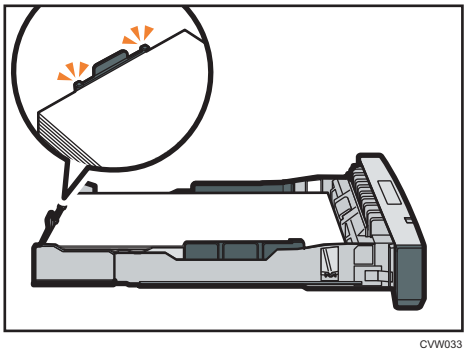

CVW033

6. **Carefully push tray 1 straight into the machine.**

   To avoid paper jams, make sure the tray is securely inserted.

Note

- The remaining paper indicator on the left front side of the paper tray shows approximately how much paper is remaining.

Extending the Tray 1 to load paper

This section explains how to load paper longer than A4 (297 mm) into the machine.

1. **Remove the tray 1 rear cover by pushing its center.**

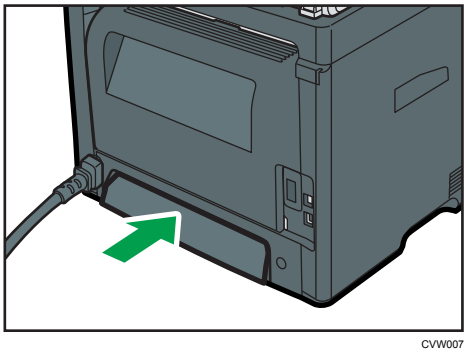

CVW007

2. **Pull out tray 1 carefully with both hands.**

   Place the tray on a flat surface.

3. **Release the extender locks on both sides of the tray, and then pull out the extender until it clicks.**

   Make sure the extender's inner surface and the scale are aligned.

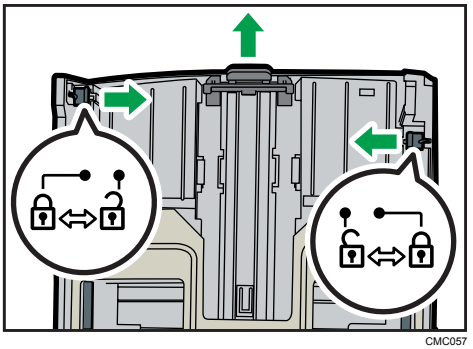

CMC057

4. **Lock the extender in the extended position.**

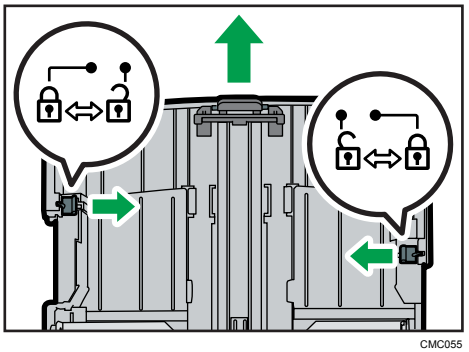

CMC055

5. **Follow Steps 2 to 6 in "Loading Paper into Tray 1".**

Note

- To reinsert the extender, you might have to push it with moderate force.
- The remaining paper indicator on the left front side of the paper tray shows approximately how much paper is remaining.

Loading Paper into Bypass Tray

Important

- Before printing on paper other than envelopes, make sure to pull up the levers on the machine rear, inside the rear cover. Leaving the levers lowered can cause print quality problems when printing on paper other than envelopes.
- Do not load paper while the machine is printing.

1. **Open the bypass tray.**

   If you load A4 (297 mm) or larger size paper, pull out the bypass tray extension.

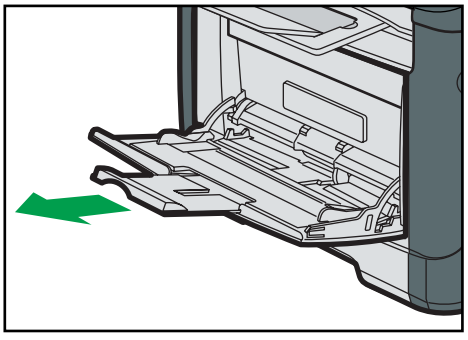

CVW009

2. Slide the side guides outward, then load paper with the print side up, and push in until it stops against the machine.

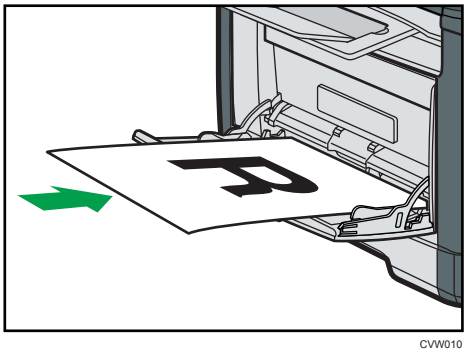

CVW010

3. Adjust the side guides to the paper width.

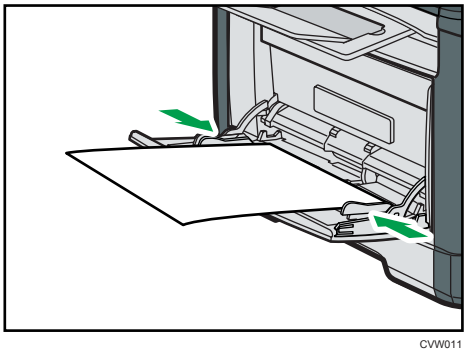

CVW011

Loading Envelopes

Important

- Before printing on envelopes, make sure to lower the levers on the machine rear, inside the rear cover, to avoid envelopes coming out creased. Also, pull up the levers back to their original

positions after printing. Leaving the levers lowered can cause print quality problems when printing on paper other than envelopes.

- Avoid using self-adhesive envelopes. They may cause machine malfunctions.
- Check there is no air in the envelopes before loading.
- Load only one size and type of envelope at a time.
- Before loading envelopes, flatten their leading edges (the edge going into the machine) by running a pencil or ruler across them.
- Some kinds of envelope might cause misfeeds, wrinkles or print poorly.
- Print quality on envelopes may be uneven if parts of an envelope have different thicknesses. Print one or two envelopes to check print quality.
- In a hot and humid environment, the envelope might be output creased or improper printing quality.

1. **Open the bypass tray.**

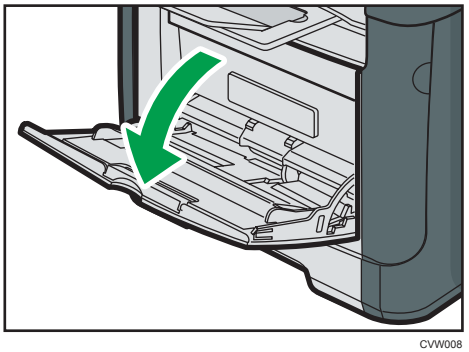

CVW008

2. **Slide the side guides outward, then load envelopes with the print side up, and push in until it stops against the machine.**

   Envelopes whose flaps are open must be printed with the flaps open, and envelopes whose flaps are closed must be printed with the flaps closed. Before loading envelopes, make sure they are as flat as possible.

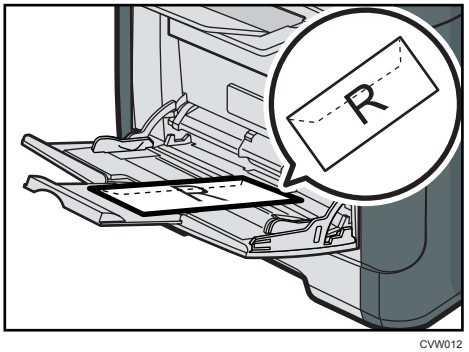

CVW012

3. **Adjust the side guides to the envelope width.**

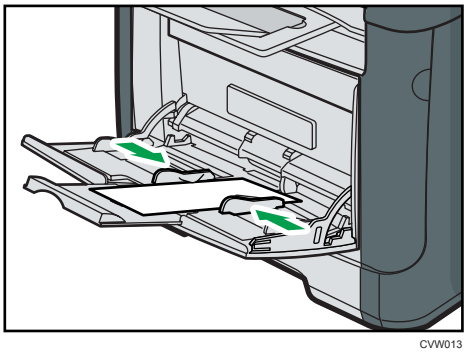

CVW013

4. **Open the rear cover.**

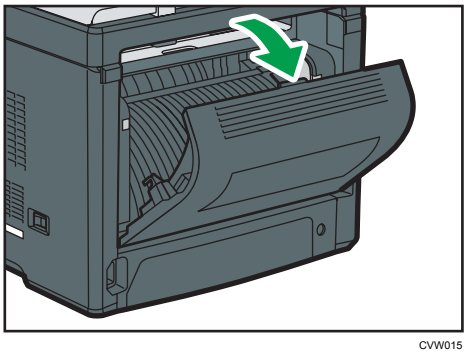

CVW015

5. **Lower the levers for printing envelopes on both sides to the position indicated with an envelope mark.**

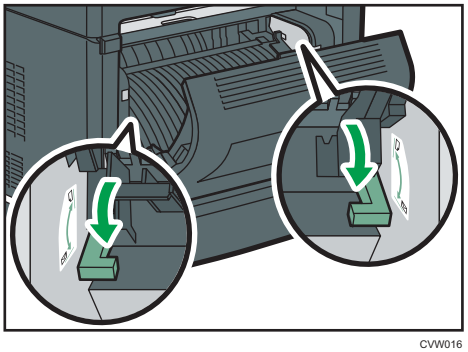

CVW016

Make sure to pull up the levers back to their original positions after printing.

6. **Close the rear cover.**

Note

- Be sure to load envelopes so that their flaps are on the left. If you do not, the envelopes will become creased.

- If printed envelopes come out badly creased, load the envelopes in the opposite direction, and then rotate the print object by 180 degrees using the printer driver before printing. For details, see the printer driver Help.

Specifying Paper Type and Paper Size Using Control Panel

This section describes how to specify the paper size and paper type using the control panel.

Note

- Paper type and size can also be specified using the printer driver. For details, see the printer driver Help.
- For prints from the bypass tray, you can select to print according to either the printer driver settings or the control panel settings with [Bypass Tray Priority] under system settings. For details about [Bypass Tray Priority], see page 147 "System Settings".
- If [Auto Continue] under system settings is enabled, printing stops temporarily if a paper type/size error is detected. The printing restarts automatically with the settings made with the control panel after about ten seconds. For details about [Auto Continue], see page 147 "System Settings".

Specifying the paper type

This section describes how to specify the paper type.

1. **Press the [User Tools] key.**

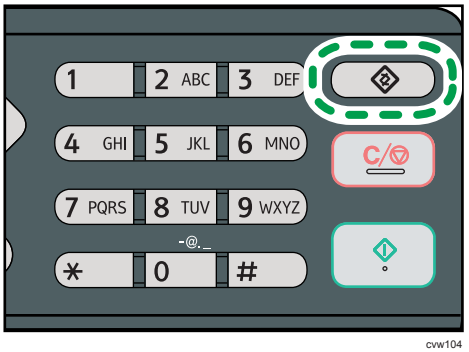

cvw104

2. **Press the [▲] or [▼] key to select [System Settings], and then press the [OK] key.**
3. **Press the [▲] or [▼] key to select [Tray Paper Settings], and then press the [OK] key.**
4. **Press the [▲] or [▼] key to select the paper type setting for the desired tray, and then press the [OK] key.**
5. **Press the [▲] or [▼] key to select the desired paper type, and then press the [OK] key.**
6. **Press the [User Tools] key to return to the initial screen.**

Note

- You can press the [Escape] key to exit to the previous level of the menu tree.

Specifying the standard paper size

This section describes how to specify the standard paper size.

1. **Press the [User Tools] key.**

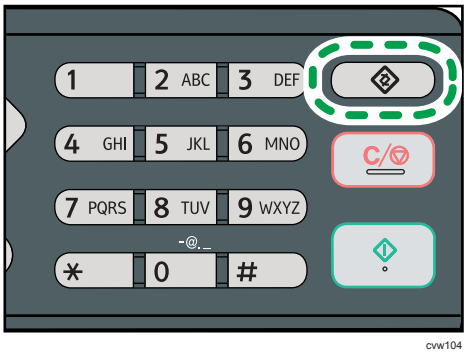

cvw104

2. **Press the [▲] or [▼] key to select [System Settings], and then press the [OK] key.**
3. **Press the [▲] or [▼] key to select [Tray Paper Settings], and then press the [OK] key.**
4. **Press the [▲] or [▼] key to select the paper size setting for the desired tray, and then press the [OK] key.**
5. **Press the [▲], [▼], [◀], or [▶] key to select the desired paper size, and then press the [OK] key.**
6. **Press the [User Tools] key to return to the initial screen.**

Note

- You can press the [Escape] key to exit to the previous level of the menu tree.

Specifying a custom paper size

This section describes how to specify a custom paper size.

Important

- When you perform printing, make sure that the paper size specified with the printer driver matches the paper size specified with the control panel. If a paper size mismatch occurs, a message appears on the display. To ignore the error and print using mismatched paper, see page 57 "If a Paper Mismatch Occurs".

1. **Press the [User Tools] key.**

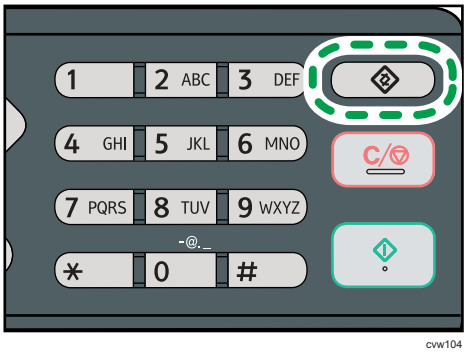

cvw104

2. **Press the [▲] or [▼] key to select [System Settings], and then press the [OK] key.**
3. **Press the [▲] or [▼] key to select [Tray Paper Settings], and then press the [OK] key.**
4. **Press the [▲] or [▼] key to select the paper size setting for the desired tray, and then press the [OK] key.**
5. **Press the [▲], [▼], [◀], or [▶] key to select [Custom Size], and then press the [OK] key.**
6. **Press the [▲] or [▼] key to select [mm] or [inch], and then press the [OK] key.**
7. **Enter the width using number keys, and then press the [OK] key.**

   To enter a decimal point, press [*].
8. **Enter the length using number keys, and then press the [OK] key.**

   To enter a decimal point, press [*].
9. **Press the [User Tools] key to return to the initial screen.**

Note

- You can press the [Escape] key to exit to the previous level of the menu tree.

Placing Originals

This section describes the types of originals you can set and how to place them.

About Originals

This section describes the types of originals that can be placed and the parts of the original that are unscannable.

Recommended size of originals

This section describes the recommended size of the original.

Exposure glass

Up to 216 mm (8.5") in width, up to 297 mm (11.7") in length

ADF

- Paper size: 140 to 216 mm ($5^1/_2$" to $8^1/_2$") in width, 140 to 356 mm ($5^1/_2$" to 14") in length
- Paper weight: 52 to 120 g/m^2 (13.8 to 28.0 lb.)

Note

- Only 1 sheet of an original can be placed on the exposure glass at a time.
- In the ADF, up to 50 sheets of originals can be placed at once (when using paper weighing 80 g/m^2, 20 lb.).

Types of originals not supported by the Auto Document Feeder

If placed in the ADF, the following types of original might be damaged or become jammed, or result in gray or black lines appearing on prints:

- Originals larger or heavier than recommended
- Stapled or clipped originals
- Perforated or torn originals
- Curled, folded, or creased originals
- Pasted originals
- Originals with any kind of coating, such as thermal fax paper, art paper, aluminum foil, carbon paper, or conductive paper
- Originals with perforated lines
- Originals with indexes, tags, or other projecting parts

- Sticky originals such as translucent paper
- Thin, highly flexible originals
- Thick originals such as postcards
- Bound originals such as books
- Transparent originals such as OHP transparencies or translucent paper
- Originals that are wet with toner or white out

Unscannable image area

Even if you correctly place originals in the ADF or on the exposure glass, margins of a few millimeters on all four sides of the original might not be scanned.

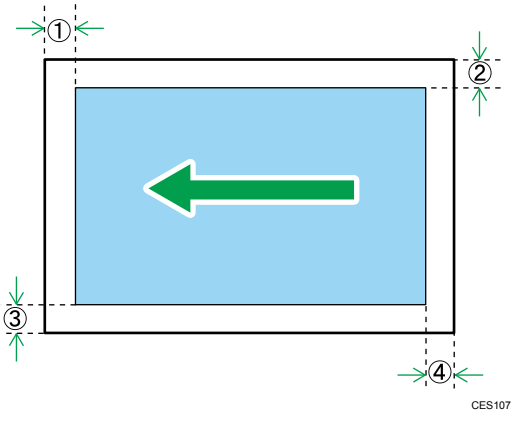

Margins when using exposure glass

	In copier mode	In scanner mode	In fax mode
① Top	4 mm	0 mm	0 mm
② Right	3 mm	0 mm	0 mm
③ Left	3 mm	0 mm	0 mm
④ Bottom	4 mm	2 mm	0 mm

Margins when using ADF

	In copier mode	In scanner mode	In fax mode
① Top	4 mm	0 mm	0 mm
② Right	3 mm	0 mm	0 mm

	In copier mode	In scanner mode	In fax mode
③ Left	3 mm	0 mm	0 mm
④ Bottom	4 mm	2 mm	0 mm

Placing Originals on the Exposure Glass

This section describes the procedure for placing originals on the exposure glass and in the ADF.

Important

- Do not place originals before any correction fluid and toner has completely dried. Doing so may make marks on the exposure glass that will appear on copies.
- The original in the ADF takes precedence over the original on the exposure glass if you place originals both in the ADF and on the exposure glass.

Note

- Because colors made by marker or highlighter pen on originals are difficult to reproduce, they might not appear on copies.

1. **Lift the ADF.**

   Be careful not to hold the input tray when lifting the ADF, for the tray might be damaged.

2. **Place the original face down on the exposure glass. The original should be aligned to the rear left corner.**

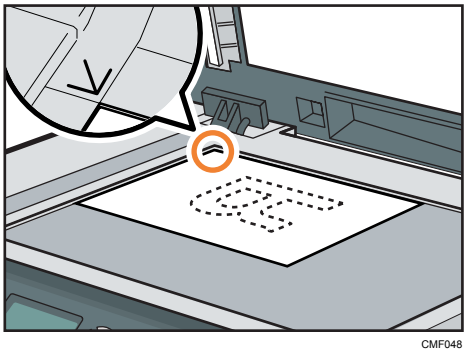

CMF048

3. **Lower the ADF.**

   Hold down the ADF with your hands when using thick, folded, or bound originals and the ADF cannot be lowered completely.

Placing Originals in the Auto Document Feeder

By using the ADF, you can scan multiple pages at once.

Important

- Do not place different size originals in the ADF at once.
- Straighten curls in the originals before placing them in the ADF.
- To prevent multiple sheets from being fed at once, fan the pages of your original before placing them in the ADF.
- Place the original squarely.

1. Open the cover of the input tray for the ADF and adjust the guides according to the size of the original.

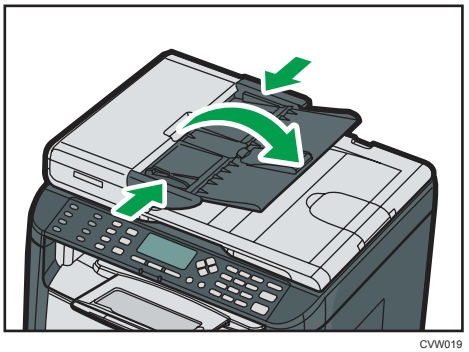

CVW019

2. Place the aligned originals face up in the ADF. The last page should be on the bottom.

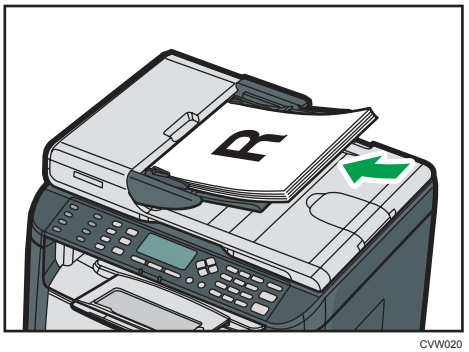

CVW020

Note

- When placing originals longer than A4, pull out the ADF tray's extenders.

3. Printing Documents

Basic Operation

The following procedure explains how to perform basic printing.

1. **Open the printer properties dialog box in your document's application.**

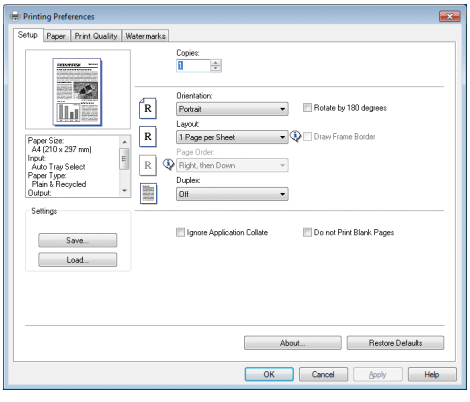

   For details about each setting, click [Help]. You can also click the information icons to show configuration information.

2. **Set printing options as necessary, and then click [OK].**

   The printer properties dialog box closes.

3. **Click [OK].**

Note

- If a paper jam occurs, printing stops after the current page has been printed out. After the jammed paper is removed, printing restarts from the jammed page automatically. For details about how to remove the jammed paper, see page 213 "Removing Printing Jams".
- After printing on envelopes, make sure to pull up the levers for printing on envelopes back to their original positions. Leaving the levers lowered can cause print quality problems when printing on paper other than envelopes. For details about the levers for printing on envelopes, see page 35 "Loading Paper".

Canceling a Print Job

You can cancel print jobs using either the machine's control panel or your computer, depending on the status of the job.

Canceling a print job before printing has started

- Windows

1. **Double-click the printer icon on the task tray of your computer.**
2. **Select the print job you want to cancel, click the [Document] menu, and then click [Cancel].**

Note

- If you cancel a print job that has already been processed, printing may continue for a few pages before being canceled.
- It may take a while to cancel a large print job.

Canceling a print job while printing

1. **Press the [Clear/Stop] key.**

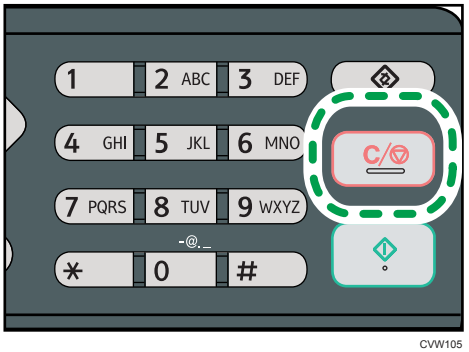

CVW105

If a Paper Mismatch Occurs

The machine reports an error if:

- The paper type does not match the print job's settings when [Input Tray;] is set to [Auto Tray Select].
- The paper size does not match the print job's settings when [Size Mismatch Detection] in [Tray Paper Settings] under system settings is enabled.

There are two ways to resolve these errors:

Continue printing using mismatched paper

Use the form-feed function to ignore the error and print using mismatched paper.

Reset the print job

Cancel printing.

Note

- For details about [Size Mismatch Detection], see page 147 "System Settings".
- If [Auto Continue] under system settings is enabled, the machine ignores the paper type and size settings and prints on whatever paper is loaded. Printing stops temporarily when the error is detected, and restarts automatically after about ten seconds using the settings made on the control panel.
- For details about [Auto Continue], see page 147 "System Settings".

Continuing Printing Using Mismatched Paper

If the paper is too small for the print job, the printed image will be cropped.

1. **If the error message is displayed, press [FormFeed].**

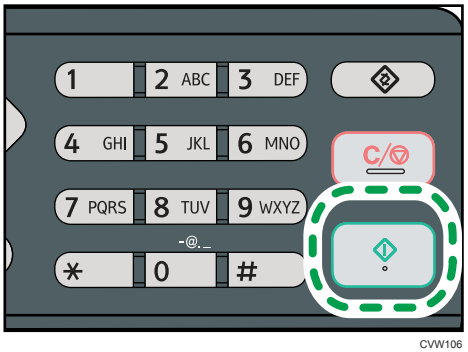

CVW106

Resetting the Print Job

1. If the error message is displayed, press the [Clear/Stop] key.

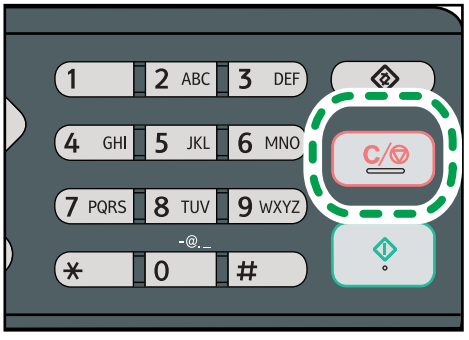

CVW105

Using Various Print Functions

This section briefly describes various print functions that you can configure with the printer driver to make printouts appropriate for your purposes.

Print Quality Functions

Print quality and color tone can be adjusted to suit the print data. Some of the print quality settings you can configure are described below.

Changing the image printing method

You can select to print with priority on print quality or print speed. When printing images, the higher the resolution of images, the longer the time required for printing.

Changing the graphics mode

You can send graphic information to the machine as either raster or vector images. Most geometric shapes or patterns print faster as vector images than as raster images. However, if certain graphics do not print as they appear on the screen, try to print them as raster images.

Saving toner when printing

You can save toner by printing with lower toner consumption. While this increases the life of the print cartridge, the output appears slightly lighter.

Changing the printable area

You can change the printable area when printing a document printed on a single page with one machine is printed on two separate pages with another machine, or vice-versa.

Changing the method of downloading TrueType fonts to the machine

When you print documents that contain characters in TrueType fonts, garbled or distorted characters may be printed. Changing the method of downloading TrueType fonts may help to solve the problem.

Changing the dither pattern

A dither pattern is a pattern of dots used to simulate a color or shade of an image. If the pattern is changed, the characteristics of the image will also change. You can select a pattern suitable for the image to be printed.

Note

- Some of the functions described above might not be available depending on the printer driver or operating system. For details, see the printer driver Help.

Print Output Functions

You can specify the form of print outputs according to your purposes. This section briefly describes some of the settings that you can specify.

Printing multiple sets of a document

You can print multiple sets of the same document.

Collating the output in document batches

You can print complete sets of a multiple-page document one set at a time (P1, P2, P1, P2 ...). If this function is not used when printing multiple sets, prints will be output in page batches (P1, P1, P2, P2 ...). This function is useful when, for example, making presentation materials.

Changing orientation or rotating the image

You can change the orientation of an image to portrait or landscape. You can also rotate the image by 180 degrees. Use rotation to prevent an image from being printed upside down when using paper that a predefined top and bottom (such as letterhead paper).

Printing multiple pages per sheet

You can print multiple pages onto one sheet of paper.

When using this function, a suitable reduction ratio is selected automatically based on the paper size and the number of pages you want to fit on each sheet.

Printing on both sides of paper (duplex printing)

You can print on both sides of paper.

Reducing or enlarging the document

You can reduce or enlarge documents by a specific ratio, from 25% to 400% in 1% increments. You can also reduce or enlarge documents automatically to fit a specific paper size. This function is useful, for example, when printing Web pages.

If the [Enable Large Papers] option is selected, A3/11" × 17"/B4/8K documents can be scaled to a size that the machine supports, so it can then be printed out.

Suppressing printing of blank pages

If a print job contains blank pages, they can be prevented from being printed.

Note that the printer driver's setting has higher priority than [Blank Page Print] under printer feature settings of the control panel.

Printing with a cover page

You can add a cover page to the print job.

You can select to leave the cover page blank, or print the first page of the document on the cover page. If a cover page is inserted into a duplex job, you can print on its back side also.

Paper for the cover page can either be the same as or different from the remaining pages.

Printing on custom size paper

You can print using non-standard size paper by specifying the size of the paper as custom size.

To specify a non-standard paper size, select [Custom Paper Size] from the [Document Size:] list, and then click the [Custom Paper Size...] button in the lower part of the dialog box to configure the paper size.

Superimposing text on prints (watermark)

You can superimpose watermark text on prints. Various predefined watermarks are provided. You can also create your own watermarks.

Note

- Some of the functions described above might not be available depending on the printer driver or operating system. For details, see the printer driver Help.

4. Copying Originals

Copier Mode Screen

This section provides information about the screen when the machine is in copier mode.

By default, the display shows the copier screen when the machine is turned on.

If the scanner or fax screen is shown on the display, press the [Copy] key on the control panel to switch to the copier screen.

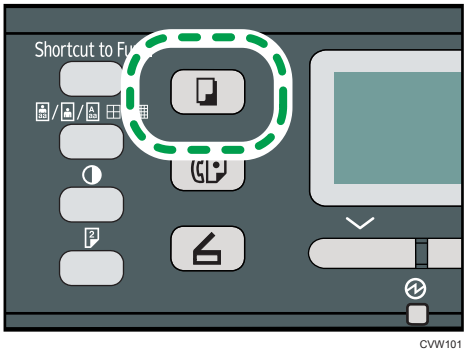

CVW101

Screen in standby mode

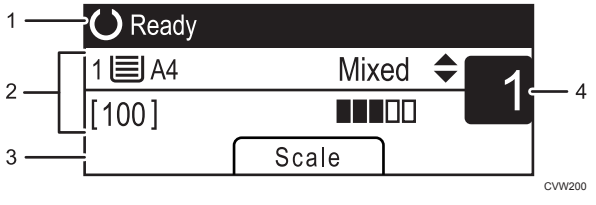

CVW200

1. **Current status or messages**

   Displays the current status or messages.

2. **Current settings**

   Displays the current tray, reproduction ratio, and scan settings.

3. **Selection key items**

   Displays the functions you can use by pressing the corresponding selection keys.

4. **Copy quantity**

   Displays the current copy quantity. You can change the copy quantity using the number keys.

Note

- The start-up mode can be specified in the [Function Priority] setting under [Admin. Tools]. For details, see page 166 "Administrator Settings".

Basic Operation

Important

- The original in the ADF takes precedence over the original on the exposure glass if you place originals both in the ADF and on the exposure glass.

1. **Press the [Copy] key.**

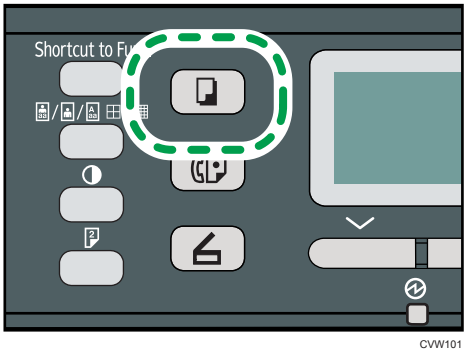

CVW101

2. **Place the original on the exposure glass or in the ADF. To place the original, see page 51 "Placing Originals".**

   If necessary, configure advanced photocopy settings.

3. **To make multiple copies, enter the number of copies using the number keys.**
4. **Press the [Start] key.**

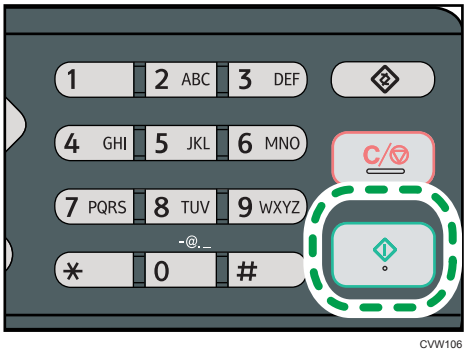

CVW106

Note

- The maximum number of copies is 99.
- You can change the paper tray for the current job by pressing the [▲] or [▼] key. You can also select to change the paper tray automatically according to the paper size (A4, Letter, or 16K).
- You can select the paper tray for printing out copies in [Select Paper] under copy settings. If you set the machine to switch between tray 1 and the bypass tray automatically depending on the paper size in this setting, you can also specify the tray the machine uses first in [Paper Tray Priority] under

system settings. For [Select Paper], see page 134 "Copier Features Settings". For [Paper Tray Priority], see page 147 "System Settings".

- When making multiple copies of a multi-page document, you can select whether copies are output in collated sets, or in page batches in the [Sort] setting under copy settings. [Sort] cannot be used with the bypass tray. For [Sort], see page 134 "Copier Features Settings".
- If a paper jam occurs, printing stops after the current page has been printed out. After the jammed paper is removed, printing restarts from the jammed page automatically.
- If a scanning jam occurs in the ADF, copying is canceled immediately. In this case, copy the originals again starting from the jammed page. For the direction to remove the jammed paper, see page 211 "Paper Feed Problems".

Canceling a Copy

While scanning the original

If copying is canceled while the machine is scanning the original, copying is cancelled immediately and there is no printout.

When the original is set in the ADF, scanning stops immediately but pages that have already been scanned completely will be copied.

While printing

If copying is canceled during printing, the photocopy process is canceled after the current page has been printed out.

Follow the procedure below to cancel copying.

1. **Press the [Copy] key.**

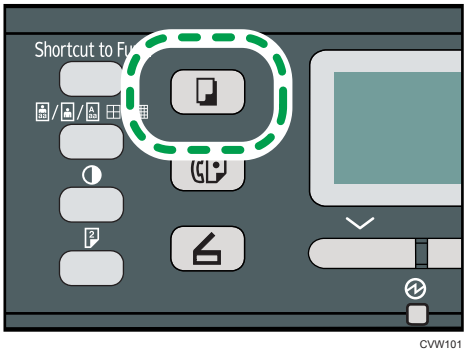

CVW101

2. **Press the [Clear/Stop] key.**

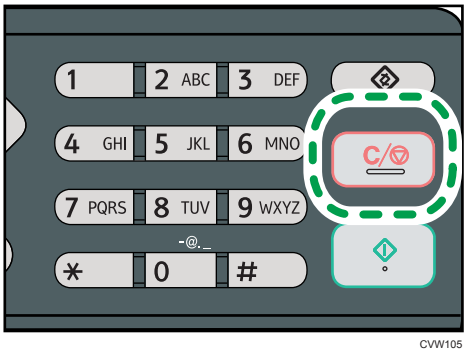

CVW105

Making Enlarged or Reduced Copies

There are two ways to set the scaling ratio: using a preset ratio or manually specifying a customized ratio.

Preset ratio

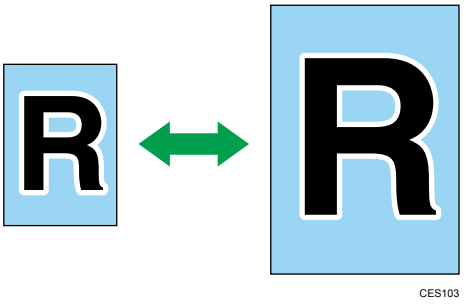

50%, 71%, 82%, 93%, 122%, 141%, 200%, 400%

Custom ratio

25% to 400% in 1% increments.

Specifying Reduce/Enlarge

1. **Press [Scale].**

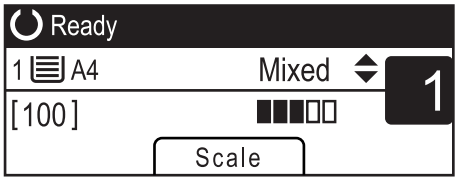

2. **Press [Reduce], [Enlarge], or [Zoom].**

   For [Reduce] or [Enlarge], press the [▲], [▼], [◀], or [▶] key to select the desired ratio. For [Zoom], specify the desired ratio using the number keys.

3. **Press the [OK] key.**

Note

- You can press the [Escape] key to exit to the previous level of the menu tree.
- You can change the machine's default [Reduce/Enlarge] setting to always make photocopies in the specified ratio. For details, see page 134 "Copier Features Settings".
- Temporary job settings are cleared in the following cases:
  - When no input is received for the period of time specified in [System Auto Reset Timer] while the initial screen is displayed. For details, see page 166 "Administrator Settings".
  - When the [Clear/Stop] key is pressed while the initial screen is displayed.
  - When the machine's mode is changed.
  - When the power is turned off.
  - When the machine's default for the same setting is changed.

Making Combined/2-sided Copies

This section describes how to combine and print a multiple pages (two or four pages) on one side or both sides of paper.

Important

- **This function is only available when the original is set in the ADF, not when it is set on the exposure glass.**
- **To use this function, the paper size used for printing copies must be set to A4, Letter or Legal.**

There are following copy modes. Select a copy mode according to your original and how you want the copy outputs to appear.

Combined copy on one side

In this mode, a two or four-page original is combined and printed on one side of paper.

- Comb. 2 on 1

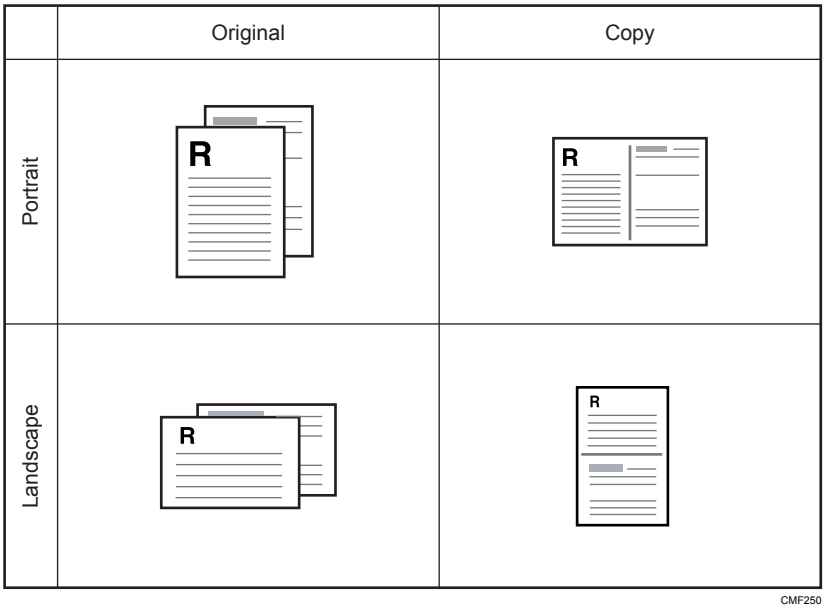

- Comb. 4 on 1

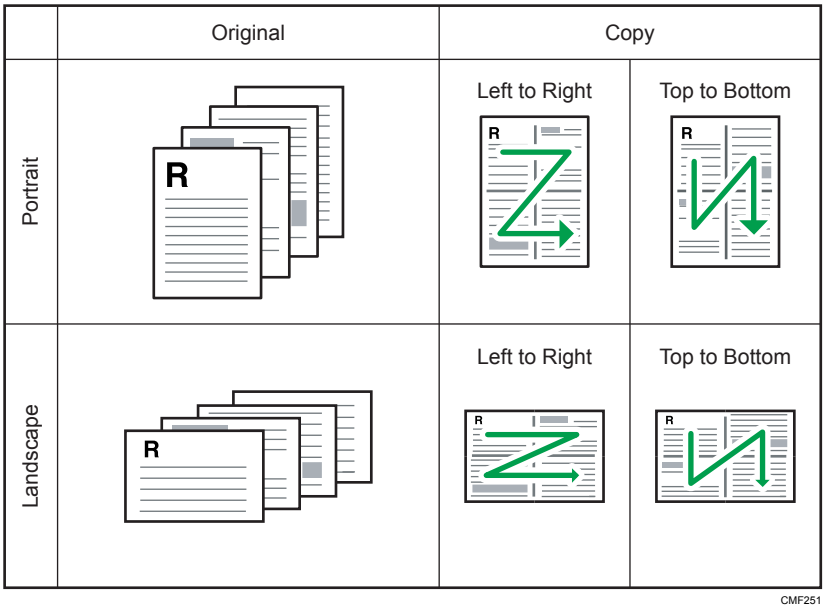

CMF251

Combined copy on both sides

In this mode, a multiple-page original is combined and printed on both sides of paper.

- Comb. 2 on 1

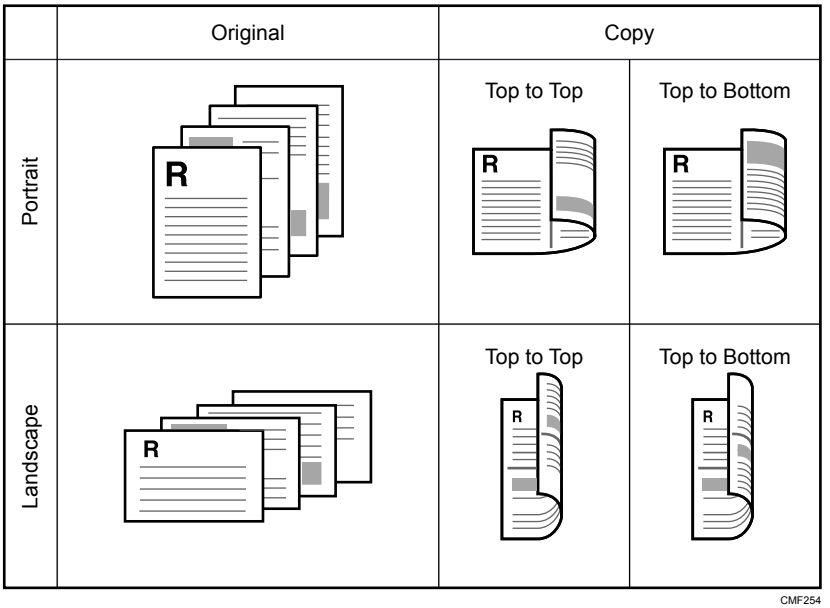

CMF254

- Comb. 4 on 1

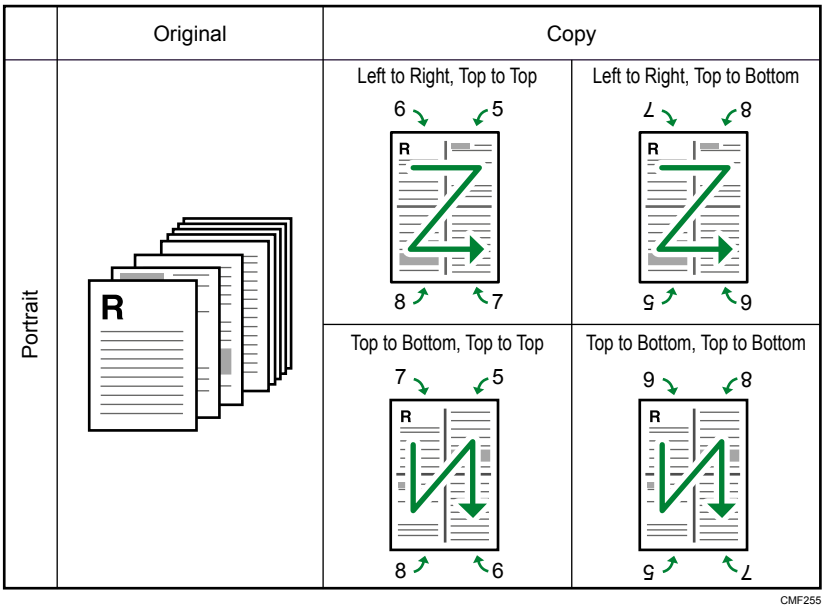

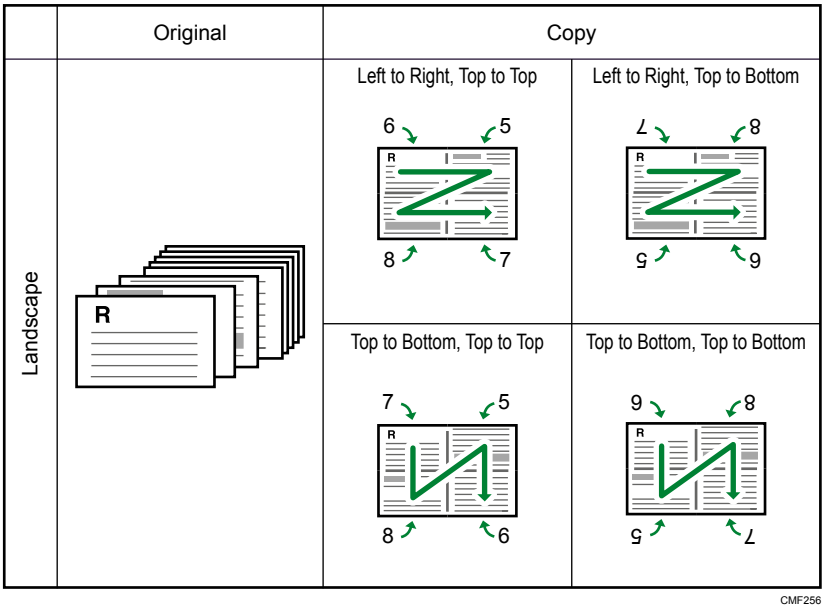

2-sided copy

In this mode, one-sided pages are printed on the front and back sides of paper without being combined.

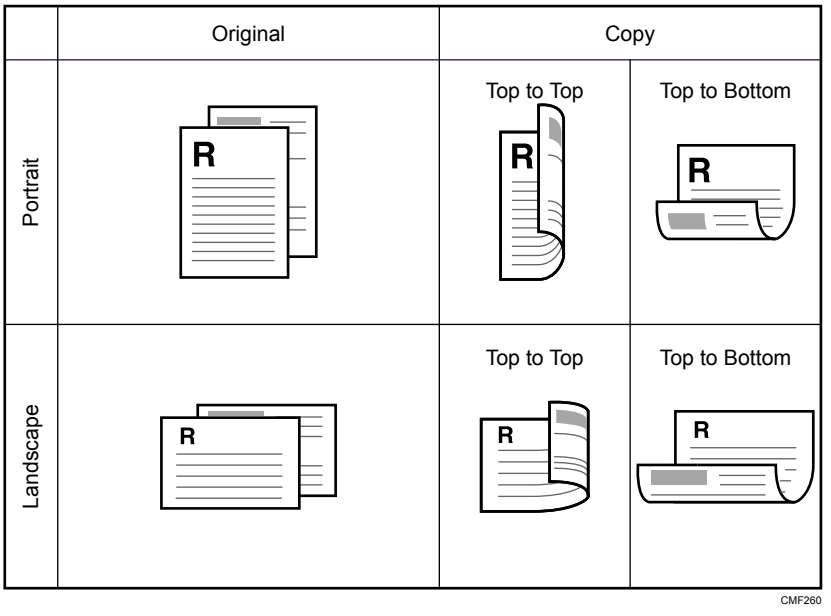

Specifying Combined and 2-sided Copies

1. **Press the [Duplex] key.**

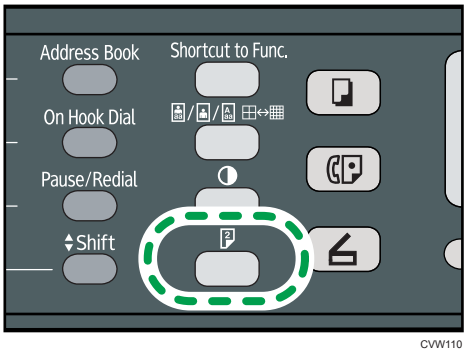

2. **Press the [▲] or [▼] key to select the desired copy mode, and then press the [OK] key.**
3. **Press the [▲] or [▼] key to select paper orientation and page order, and then press the [OK] key.**

   The screen will show the selected copy mode.

Note

- You can press the [Escape] key to exit to the previous level of the menu tree.
- You can change the machine's default [Duplex/Combine] setting to always make photocopies in combine mode. For details, see page 134 "Copier Features Settings".

- Setting combined copying automatically disables the [ID Card Copy] setting.
- Temporary job settings are cleared in the following cases:
- Temporary job settings are cleared in the following cases:
    - When no input is received for the period of time specified in [System Auto Reset Timer] while the initial screen is displayed. For details, see page 166 "Administrator Settings".
    - When the [Clear/Stop] key is pressed while the initial screen is displayed.
    - When the machine's mode is changed.
    - When the power is turned off.
    - When the machine's default for the same setting is changed.

Copying Both Sides of an ID Card onto One Side of Paper

This section describes how to copy the front and back sides of an ID card or other small documents onto one side of a sheet of paper.

Important

- This function is available only when the original is set on the exposure glass, not when it is set in the ADF.
- To use this function, the paper size used for printing copies must be set to A6, A5, A4, Half Letter or Letter.

Printed paper size	Scanned paper size
A4	A5 (148×210 mm)
Letter	Half Letter (140×216 mm)
A5	A6 (105×148 mm)
Half Letter	Quarter Letter (108×140 mm)
A6	A7 (74×105 mm)

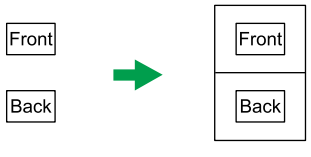

CES165

Copying an ID Card

1. **Press the [Shortcut to Func.] key.**

CVW107

To make the [Shortcut to Func.] key enable ID card copy mode for the current job, [Shortcut to Function] under administrator settings must be set to [ID Card Copy Mode].

For [Shortcut to Function], see page 166 "Administrator Settings".

2. **Place the original front side down and top to the machine rear on the exposure glass.**

Place the original in the center of the specified scan area for sheets that are half the size of the paper to be printed on. For example, if you are printing on a sheet of A4 paper, place the original in the center of the A5 scan area.

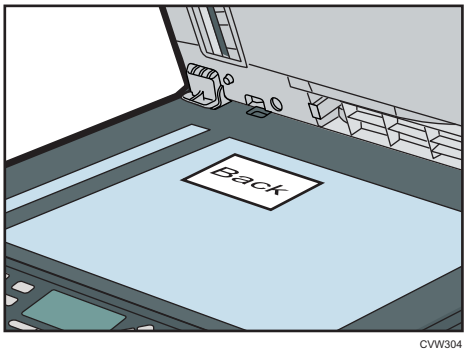

CVW304

The location to place the original depends on the paper size.

- When printing on a sheet of A4, A5, or A6 paper

  Position the card so that it is centered at the intersection. (The same position applies to both the front and back of the ID card.)

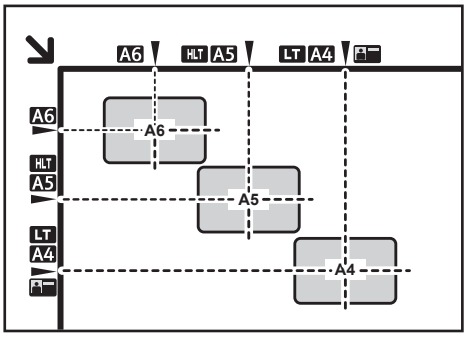

CVW302

- When printing on a sheet of Letter or Half Letter paper

  Position the card so that it is centered at the intersection.(The same position applies to both the front and back of the ID card.)

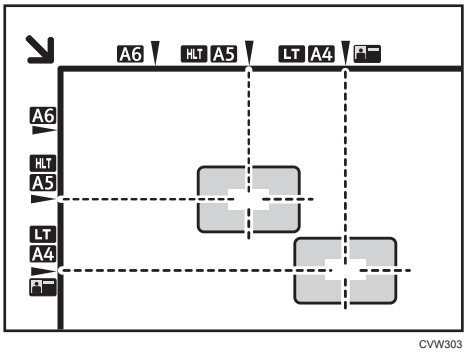

CVW303

3. **Press the [Start] key.**

   A message prompting you to place the original back side down on the exposure glass appears on the display.

4. **Within 30 seconds, place the original back side down and top to the machine rear on the exposure glass, and then press the [Start] key again.**

Note

- For the ID card copy function, you can set the machine to print a line in the middle of the printed paper. Specify [ID Card Center Line] under Copier Features.
- You can press the [Escape] key to exit to the previous level of the menu tree.
- Regardless of the machine's reduction or enlargement ratio setting, an ID card copy will always be made at 100%.
- You can change the machine's default [Reduce/Enlarge] setting to always make photocopies in ID card copy mode. In addition, if the [Shortcut to Func.] key is not set to [ID Card Copy Mode], you must configure the machine's default setting to perform ID card copy. For [Reduce/Enlarge], see page 134 "Copier Features Settings".

- Setting this function for the current job temporarily disables combined copying automatically. However, after the temporary job setting is cleared, the combined copying will be enabled again automatically.
- Temporary job settings are cleared in the following cases:
  - When no input is received for the period of time specified in [System Auto Reset Timer] while the initial screen is displayed. For details, see page 166 "Administrator Settings".
  - When the [Clear/Stop] key is pressed while the initial screen is displayed.
  - When the machine's mode is changed.
  - When the power is turned off.
  - When the machine's default for the same setting is changed.

Specifying the Scan Settings

This section describes how to specify image density and scan quality for the current job.

Adjusting Image Density

There are five image density levels. The higher the density level, the darker the printout.

1. **Press the [Density] key.**

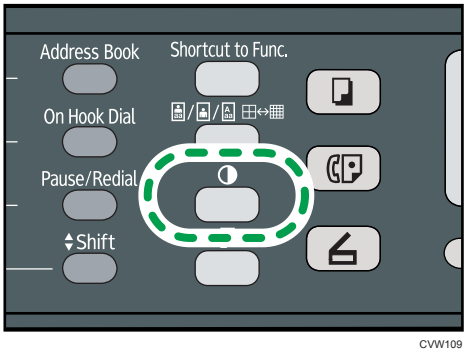

CVW109

2. **Press the [◀] or [▶] key to select the desired density level, and then press the [OK] key.**

Note

- Press the [Escape] key to discard the current change and return to the initial screen.
- You can change the machine's default [Density] setting to always make copies with a specific density level. For details, see page 138 "Scanner Features Settings".
- Temporary job settings are cleared in the following cases:
  - When no input is received for the period of time specified in [System Auto Reset Timer] while the initial screen is displayed. For details, see page 166 "Administrator Settings".
  - When the [Clear/Stop] key is pressed while the initial screen is displayed.
  - When the machine's mode is changed.
  - When the power is turned off.
  - When the machine's default for the same setting is changed.

Selecting the Document Type According to Original

There are three document types:

Mixed

Select this when the original contains both text and photographs or pictures.

Text

Select this when the original contains only text and no photographs or pictures.

Photo

Select this when the original contains only photographs or pictures. Use this mode for the following types of original:

- Photographs
- Pages that are entirely or mainly photographs or pictures, such as magazine pages.

Specifying the Original Type

1. **Press the [Image Quality] key.**

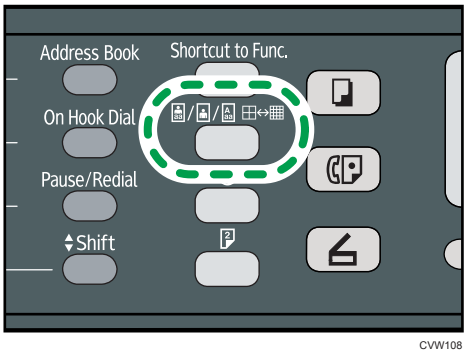

CVW108

2. **Press the [▲] or [▼] key to select the desired document type, and then press the [OK] key.**

Note

- Press the [Escape] key to discard the current change and return to the initial screen.
- You can change the machine's default [Original Type] setting to always make copies with a specific document type. For details, see page 134 "Copier Features Settings".
- Temporary job settings are cleared in the following cases:
  - When no input is received for the period of time specified in [System Auto Reset Timer] while the initial screen is displayed. For details, see page 166 "Administrator Settings".
  - When the [Clear/Stop] key is pressed while the initial screen is displayed.
  - When the machine's mode is changed.
  - When the power is turned off.
  - When the machine's default for the same setting is changed.

5. Scanning Originals

Scanner Mode Screen

This section provides information about the screen in scanner mode.

By default, the display shows the copier screen when the machine is turned on. If the copier or fax screen is shown on the display, press the [Scanner] key on the control panel to switch to the scanner screen.

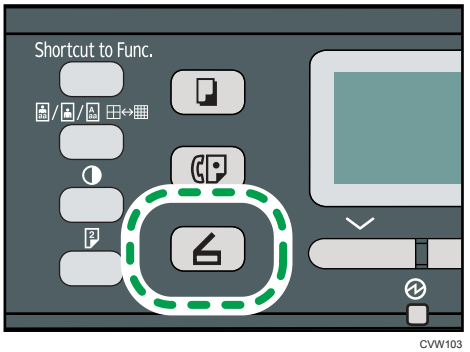

CVW103

Screen in standby mode

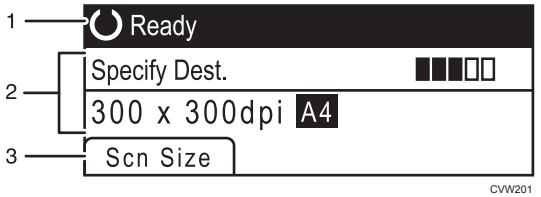

CVW201

1. **Current status or messages**

   Displays the current status or messages.

2. **Current settings**

   Displays the current scanning mode and scan settings.

   - When "Specify Dest." is displayed:

     Scan to E-mail, Scan to FTP, or Scan to Folder functions can be used.

3. **Selection key items**

   Displays the functions you can use by pressing the corresponding selection keys.

Note

- The machine's default mode at power on can be specified in the [Function Priority] setting under [Admin. Tools]. For [Function Priority], see page 166 "Administrator Settings".

Registering Scan Destinations

This section describes how to register scan destinations in the Address Book. To send scanned files to an e-mail address (Scan to E-mail), FTP server (Scan to FTP), or a shared folder on a network computer (Scan to Folder), you must first register the destination in the Address Book using Web Image Monitor.

Important

- The Address Book data could be damaged or lost unexpectedly. The manufacturer shall not be responsible for any damages resulting from such data loss. Be sure to create backup files of the Address Book data periodically.
- Depending on your network environment, the Scan to FTP and Scan to Folder functions may require a user name and password to be correctly entered in the destination information. In such cases, after registering destinations, check that the user name and password are correctly entered by sending test documents to those destinations.

The Address Book can contain up to 100 entries, including 8 Quick Dial entries.

Destinations registered as Quick Dial entries can be selected by pressing the corresponding One Touch button.

1. **Start the Web browser, and access the machine by entering its IP address.**
2. **Click [Quick Dial Destination] or [Scan Destination].**
3. **From the [Destination Type] list, select [E-mail Address], [FTP] or [Folder].**
4. **Register information as necessary.**

   The information you must register varies depending on the destination type. For details, see the tables below.
5. **Enter the administrator password if required.**
6. **Click [Apply].**
7. **Close the Web browser.**

Scan to E-mail Settings

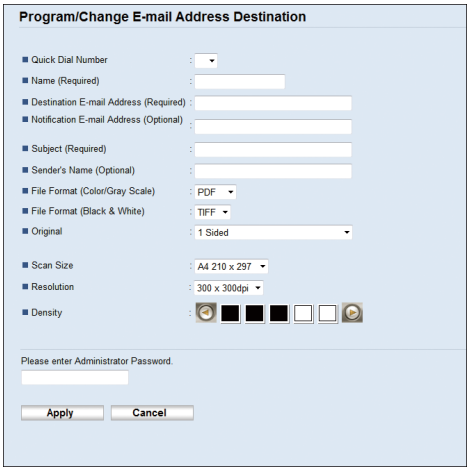

Item	Setting	Description
Quick Dial Number	Optional	Select when setting the destination as a Quick Dial entry.
Name	Required	Name of the destination. The name specified here will be shown on the screen when selecting a scan destination. Can contain up to 16 characters.
Destination E-mail Address	Required	E-mail address of the destination. Can contain up to 64 characters.
Notification E-mail Address	Optional	E-mail address to which a notification is sent after transmission. Can contain up to 64 characters.
Subject	Required	Subject of the e-mail. Can contain up to 64 characters.
Sender's Name	Optional	Name of e-mail sender. The name specified here will be shown under "From" or a similar field of the recipient's email application. Can contain up to 32 characters.
File Format (Color/Gray Scale)	Required	File format of the scanned file when scanning in color. PDF or JPEG can be selected. PDF supports multiple pages in a document, but JPEG does not.
File Format (Black & White)	Required	File format of the scanned file when scanning in black and white. PDF or TIFF can be selected. Both formats support multiple pages in a document.

Item	Setting	Description
Original	Required	Select the sides of the original (1 side or 2-sides) to scan according to the page and binding orientation.
Scan Size	Optional	Select the scanning size for the original from A5, B5, A4, Executive, Half Letter, Letter, Legal, 16K, or custom size. If you select custom size, select [mm] or [Inch], and then specify the width and length.
Resolution	Optional	Select the scan resolution from 100×100, 150×150, 200×200, 300×300, 400×400, or 600×600 dpi.
Density	Optional	Specify the image density by clicking the right or left buttons. is the lightest, and is the darkest.

Scan to FTP Settings

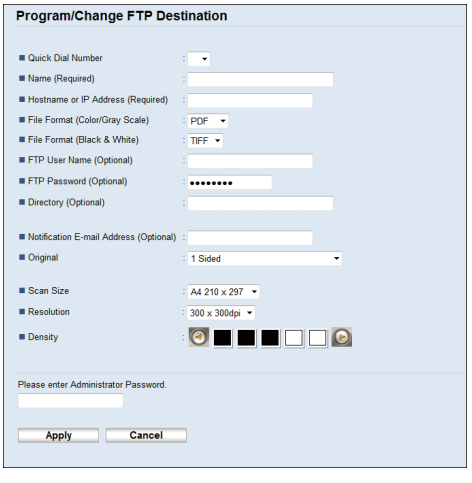

Item	Setting	Description
Quick Dial Number	Optional	Select when setting the destination as a Quick Dial entry.
Name	Required	Name of the destination. The name specified here will be shown on the screen when selecting a scan destination. Can contain up to 16 characters.
Hostname or IP Address	Required	Name or IP address of the FTP server. Can contain up to 64 characters.

Item	Setting	Description
File Format (Color/Gray Scale)	Required	File format of the scanned file when scanning in color. PDF or JPEG can be selected. PDF supports multiple pages in a document, but JPEG does not.
File Format (Black & White)	Required	File format of the scanned file when scanning in black and white. PDF or TIFF can be selected. Both formats support multiple pages in a document.
FTP User Name	Optional	User name for logging in to the FTP server. Can contain up to 32 characters.
FTP Password	Optional	Password for logging in to the FTP server. Can contain up to 32 characters.
Directory	Optional	Name of the FTP server directory where scanned files are stored. Can contain up to 64 characters.
Notification E-mail Address	Optional	E-mail address to which a notification is sent after transmission. Can contain up to 64 characters.
Original	Required	Select the sides of the original (1 side or 2-sides) to scan according to the page and binding orientation.
Scan Size	Optional	Select the scanning size for the original from A5, B5, A4, Executive, Half Letter, Letter, Legal, or custom size. If you select custom size, select [mm] or [Inch], and then specify the width and length.
Resolution	Optional	Select the scan resolution from 100×100, 150×150, 200×200, 300×300, 400×400, or 600×600 dpi.
Density	Optional	Specify the image density by clicking the right or left buttons. ■□□□□ is the lightest, and ■■■■■ is the darkest.

Scan to Folder Settings

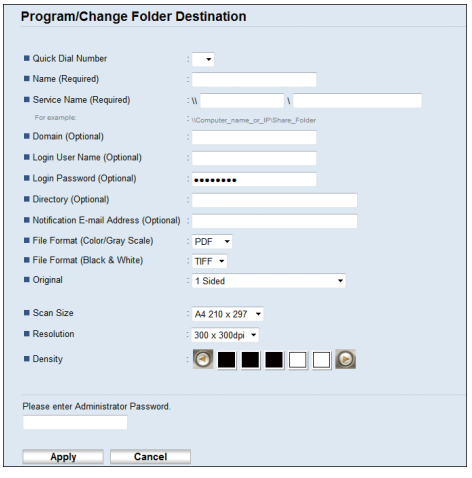

5

Item	Setting	Description
Quick Dial Number	Optional	Select when setting the destination as a Quick Dial entry.
Name	Required	Name of the destination. The name specified here will be shown on the screen when selecting a scan destination. Can contain up to 16 characters.
Service Name	Required	Path to the directory where scanned files will be stored. Consists of the IP address or name of the destination computer (can contain up to 64 characters), and name of the shared folder (can contain up to 32 characters).
Domain	Optional	Specify the name of the domain to which the computer belongs. Can contain up to 15 characters.
Login User Name	Optional	User name for logging in to the destination computer. Can contain up to 32 characters.
Login Password	Optional	Password for logging in to the destination computer. Can contain up to 32 characters.
Directory	Optional	Directory within the shared folder for storing scanned files. Can contain up to 64 characters.
Notification E-mail Address	Optional	E-mail address to which a notification is sent after transmission. Can contain up to 64 characters.

Item	Setting	Description
File Format (Color/Gray Scale)	Required	File format of the scanned file when scanning in color. PDF or JPEG can be selected. PDF supports multiple pages in a document, but JPEG does not.
File Format (Black & White)	Required	File format of the scanned file when scanning in black and white. PDF or TIFF can be selected. Both formats support multiple pages in a document.
Original	Required	Select the sides of the original (1 side or 2-sides) to scan according to the page and binding orientation.
Scan Size	Optional	Select the scanning size for the original from A5, B5, A4, Executive, Half Letter, Letter, Legal, or custom size. If you select custom size, select [mm] or [Inch], and then specify the width and length.
Resolution	Optional	Select the scan resolution from 100×100, 150×150, 200×200, 300×300, 400×400, or 600×600 dpi.
Density	Optional	Specify the image density by clicking the right or left buttons. ▩□□□□ is the lightest, and ▩▩▩▩▩ is the darkest.

Note

- To send files via e-mail, SMTP and DNS settings must be configured properly.
- If you are using the Scan to E-mail function, select a time zone according to your geographic location to send email with correct transmission date and time.
- To send files to an FTP server or computer, the user name, password, and directory must be configured properly.
- On a network that uses a DNS server, specify a computer name in [Service Name] and the name of the domain to which the computer belongs in [Domain]. In this case, also configure the DNS related settings using Web Image Monitor.
- Scan destinations cannot be registered using the control panel.

Modifying Scan Destinations

This section describes how to modify the information of registered destinations.

1. **Start the Web browser, and access the machine by entering its IP address.**
2. **Click [Scan Destination].**

3. **Click the [E-mail Address], [FTP], or [Folder] tab.**
4. **Select the entry to modify, and then click [Change].**
5. **Modify settings as necessary.**
6. **Enter the administrator password if required.**
7. **Click [Apply].**
8. **Close the Web browser.**

Note

- You can unassign a Quick Dial entry from a One-touch button from the [Quick Dial Destination] page. To do this, select the desired entry, click [Delete], and then click [Apply] again on a confirmation page.

Deleting Scan Destinations

This section describes how to delete registered destinations.

1. **Start the Web browser, and access the machine by entering its IP address.**
2. **Click [Scan Destination].**
3. **Click the [E-mail Address], [FTP], or [Folder] tab.**
4. **Select the entry to delete, and then click [Delete].**
5. **Confirm that the entry you have selected is the entry that you want to delete.**
6. **Enter the administrator password if required.**
7. **Click [Apply].**
8. **Close the Web browser.**

Basic Operation

Scanning using the control panel allows you to send scanned files via e-mail (Scan to E-mail), to an FTP server (Scan to FTP), or to the shared folder of a computer on a network (Scan to Folder).

The Scan to E-mail, Scan to FTP, and Scan to Folder functions are available only through a network connection.

Scan to E-mail/FTP/Folder

This section describes the basic operation for sending scanned files via e-mail, to an FTP server, or to a computer, depending on the specified destination.

Important

- The original in the ADF takes precedence over the original on the exposure glass if you place originals both in the ADF and on the exposure glass.
- When using the Scan to E-mail, Scan to FTP or Scan to Folder function, you must first register the destination in the Address Book using Web Image Monitor. For details, see page 82 "Registering Scan Destinations".

1. **Place the original on the exposure glass or in the ADF. To place the original, see page 51 "Placing Originals".**
2. **Press the [Scanner] key, and then press the [Address Book] key.**

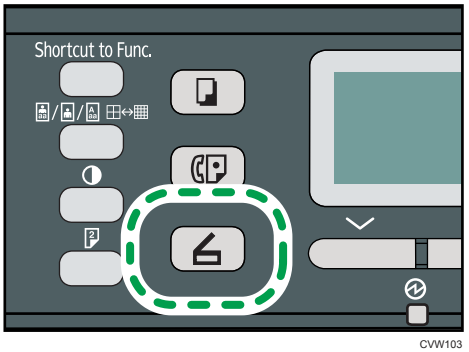

CVW103

Alternatively, you can press the [Shortcut to Func.] key if [Shortcut to Function] under administrator settings is set to [Select Scanner Dest.]. For [Shortcut to Function], see page 166 "Administrator Settings".

3. **Press the [▲] or [▼] key to select [Search Address Book], and then press the [OK] key.**

   If you want to search for a specific entry by its name, enter the first letters of the name using the number keys, and then press the [OK] key. Each time you enter a character, the display changes to show the matching name.

4. **Search for the desired destination by pressing the [▲] or [▼] key to scroll the Address Book, and then press the [OK] key.**

   When you specify a scan destination, the machine's scan settings change automatically according to the information registered for that destination in the Address Book. If necessary, you can change the scan settings using the control panel. For scan settings, see page 93 "Specifying the Scan Settings".

5. **Press the [Start] key.**

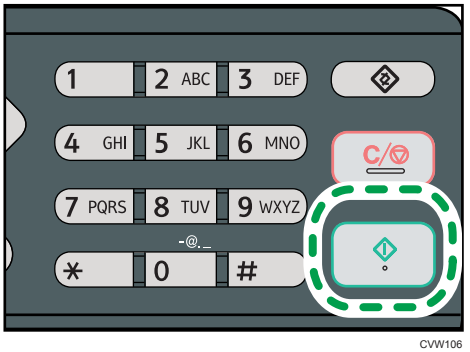

CVW106

   Depending on the machine's settings, you may see the following screen on the display when scanning from the exposure glass.

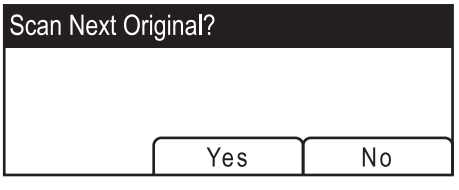

   If you see this screen, proceed to the next step.

6. **If you have more originals to scan, place the next original on the exposure glass, and then press [Yes]. Repeat this step until all originals are scanned.**

7. **When all originals have been scanned, press [No] to start sending the scanned file.**

Note

- To cancel scanning, press the [Scanner] key, and then press the [Clear/Stop] key. The scan files are discarded.
- You can configure the machine to scan documents in black and white, color, or grayscale by changing the [Scanning Mode] setting under scanner settings. For details, see page 93 "Specifying the Scan Settings".
- You can also specify a destination using the One Touch buttons, [Pause/Redial] key. For details, see page 91.

- If the [Limitless Scan] setting under scanner settings is enabled, you can place originals on the exposure glass repeatedly in a single scan procedure. For details, see page 93 "Specifying the Scan Settings".
- If [File Type] under scanner settings is set to [Multi-page], you can scan multiple pages to create a single PDF or TIFF file containing all pages. However, if the file format is JPEG, a single-page file will be created for every page scanned. For details, see page 93 "Specifying the Scan Settings".
- If paper is jammed in the ADF, the scan job will be discarded. Remove the jammed paper and scan the entire originals again. For the direction to remove paper jammed in the ADF, see page 211 "Paper Feed Problems".

Specifying the scan destination using the One Touch buttons or [Pause/Redial] key

This section describes how to specify a destination using the following keys:

- One Touch buttons

  Use these to specify destinations registered as Quick Dial entries.
- [Pause/Redial] key

  Press this to specify the last used destination as the destination for the current job.

Using the One Touch buttons

Press the One Touch button to which the desired Quick Dial entry is registered.

Press the [Shift] key to use the Quick Dial entries Nos. 5 to 8.

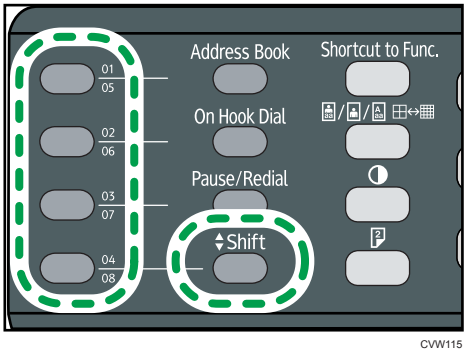

CVW115

Using the [Pause/Redial] key

Press the [Pause/Redial] key to select the last used destination.

CVW113

Note

- When you specify a scan destination, the machine's scan settings change automatically according to the information registered for that destination in the Address Book. If necessary, you can change the scan settings using the control panel. For scan settings, see page 93 "Specifying the Scan Settings".
- The [Pause/Redial] key is not effective for the first scan job after the machine is turned on.
- To select destinations not registered as Quick Dial entries, use the [Address Book] key. For specifying destinations using the [Address Book] key, see page 89 "Scan to E-mail/FTP/Folder".

Specifying the Scan Settings

When you specify a scan destination, the machine's scan settings change automatically according to the information registered for that destination in the Address Book. If necessary, you can change the scan settings for the current job using the control panel.

Specifying the Scanning Size According to the Size of the Original

This section describes how to specify the scanning size according to the size of the current original.

1. **Press [Scn Size].**

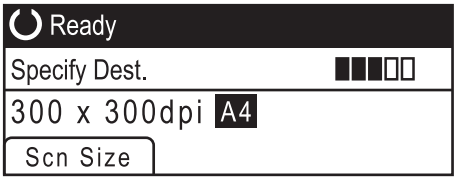

2. **Press the [▲] or [▼] key to select the size of the original, and then press the [OK] key.**

   If you selected anything other than [Custom Size], you do not need to perform the remaining steps of the procedure.

3. **Press the [▲] or [▼] key to select [mm] or [inch], and then press the [OK] key.**
4. **Enter the width using the number keys, and then press the [OK] key.**

   To enter a decimal point, press [✱].

5. **Enter the length using the number keys, and then press the [OK] key.**

   To enter a decimal point, press [✱].

Note

- You can press the [Escape] key to exit to the previous level of the menu tree.
- You can change the machine's default [Scan Size] setting to always scan originals with a specific scanning size. For details, see page 138 "Scanner Features Settings".
- Temporary job settings are cleared in the following cases:
  - When no input is received for the period of time specified in [System Auto Reset Timer] while the initial screen is displayed. For details, see page 166 "Administrator Settings".
  - When the [Clear/Stop] key is pressed while the initial screen is displayed.
  - When the machine's mode is changed.
  - When the power is turned off.
  - When the machine's default for the same setting is changed

Adjusting Image Density

This section describes how to adjust image density for the current job.

There are five image density levels. The higher the density level, the darker the scanned image.

1. **Press the [Density] key.**

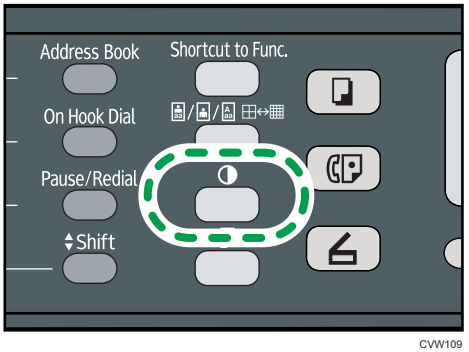

CVW109

2. **Press the [◀] or [▶] key to select the desired density level, and then press the [OK] key.**

Note

- Press the [Escape] key to discard the current change and return to the initial screen.
- You can change the machine's default [Density] setting to always scan with a specific density level. For details, see page 138 "Scanner Features Settings".
- Temporary job settings are cleared in the following cases:
  - When no input is received for the period of time specified in [System Auto Reset Timer] while the initial screen is displayed. For details, see page 138 "Scanner Features Settings".
  - When the [Clear/Stop] key is pressed while the initial screen is displayed.
  - When the machine's mode is changed.
  - When the power is turned off.
- When the machine's default for the same setting is changed.

Specifying Resolution

This section describes how to specify the scan resolution for the current job.

There are six resolution settings. The higher the resolution, the higher the quality but greater the file size.

1. **Press the [Image Quality] key.**

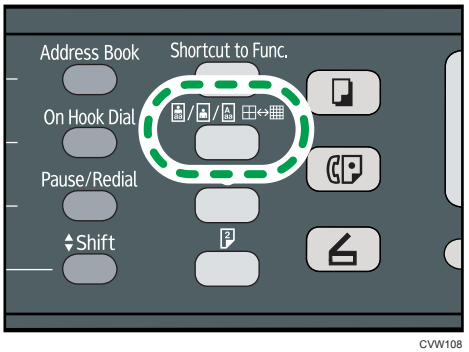

CVW108

2. **Press the [▲], [▼], [◀], or [▶] key to select the desired resolution, and then press the [OK] key.**

Note

- Press the [Escape] key to discard the current change and return to the initial screen.
- You can change the machine's default [Resolution] setting to always scan with a specific resolution level. For details, see page 138 "Scanner Features Settings".
- Temporary job settings are cleared in the following cases:
  - When no input is received for the period of time specified in [System Auto Reset Timer] while the initial screen is displayed. For details, see page 166 "Administrator Settings".
  - When the [Clear/Stop] key is pressed while the initial screen is displayed.
  - When the machine's mode is changed.
  - When the power is turned off.
  - When the machine's default for the same setting is changed.

Scanning from a Computer

Scanning from a computer connected by the network or USB (TWAIN scanning and WIA scanning) allows you to operate the machine from your computer and scan originals into your computer directly.

TWAIN Scanning

TWAIN scanning is possible if your computer is running a TWAIN-compatible application.

1. **Place the original on the exposure glass.**
2. **Open the properties dialog box for this machine using a TWAIN-compatible application on your computer.**
3. **In the dialog box, configure the scan settings as required, and then click [Scan].**

Settings you can configure in the TWAIN dialog box

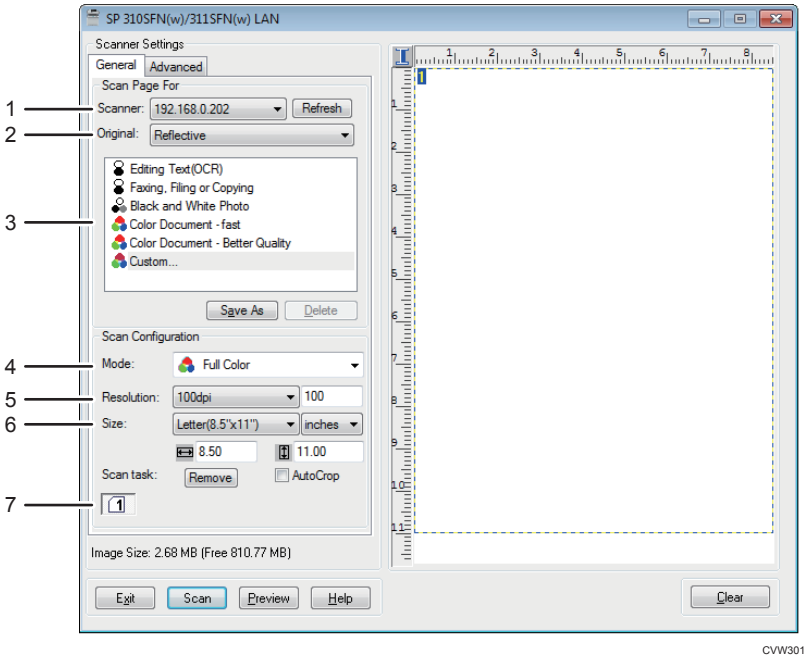

CVW301

1. **Scanner:**

   Select the scanner you want to use. The scanner you select becomes the default scanner. Click [Refresh] to discover all available scanners connected via USB or the network.

2. **Original:**

   Select [Reflective] to scan from the exposure glass, or [Automatic Document Feeder] to scan from the ADF.

3. **Original type**

   According to your original, select a setting from the list of options detailed below, or select [Custom...] to configure your own scan settings. "Mode", "Resolution", and "Size" under "Scan Configuration" will change according to the Original type setting you selected here.

   - When using the exposure glass:

     [Editing Text(OCR)]

     [Faxing, Filing, or Copying]

     [Black and White Photo]

     [Color Document - fast]

     [Color Document - Better Quality]

     [Custom...]
   - When using the ADF:

     [ADF-Faster]

     [ADF-Better]

     [ADF-gray]

     [Custom...]

4. **Mode:**

   Select from color, grayscale, or black-and-white.

5. **Resolution:**

   Select a resolution from the list. If you select [User defined], enter a resolution value directly in the edit box. Note that increasing the resolution also increases the file size and scanning time.

   Selectable resolutions vary depending on where the original is set.

   - When using the exposure glass:

     75, 100, 150, 200, 300, 400, 500, 600, 1200, 2400, 4800, 9600, 19200 dpi, User defined
   - When using the ADF:

     75, 100, 150, 200, 300, 400, 500, 600 dpi, User defined

6. **Size:**

   Select the scanning size. If you select [User defined], enter the scanning size directly in the edit box. Also, you can change the scanning size with your mouse in the preview area. You can select the unit of measure from [cm], [inches], or [pixels]. Selectable resolutions vary depending on where the original is set. For details, see the TWAIN help.

7. **Scan task: (when using the exposure glass)**

   Displays a maximum of 10 previously used scan areas. To remove a scan task, select the number of the task, and then click [Remove]. You can select [AutoCrop] to let the scanner automatically detect the size of your original.

Note

- If the scan data is larger than the memory capacity, an error message appears and scanning is canceled. If this happens, specify a lower resolution and scan the original again.
- For details, see the TWAIN help.

Basic Operation for WIA Scanning

1. Place the original on the exposure glass.
2. On the [Start] menu on your computer, click [Devices and Printers].
3. Right-click the icon of the printer model you want to use, and then click [Start scan] to open the dialog box for the scan settings.
4. In the dialog box, configure the scan settings as required, and then click [Scan].
5. Click [Import].

6. Sending and Receiving a Fax

Fax Mode Screen

This section provides information about the screen in fax mode.

By default, the display shows the copier screen when the machine is turned on.

If the copy or scanner screen is shown on the display, press the [Facsimile] key on the control panel to switch to the fax screen.

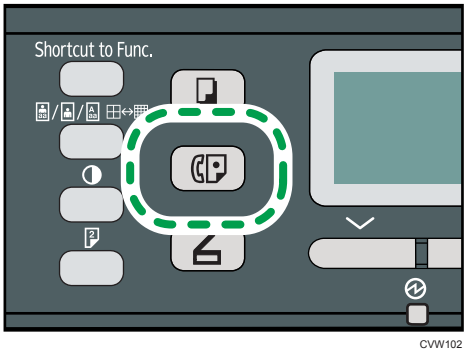

CVW102

Screen in standby mode

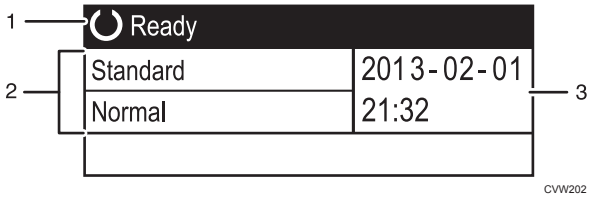

CVW202

1. **Current status or messages**

   Displays the current status or messages.

2. **Current settings**

   Displays the current density and resolution settings.

3. **Current date and time**

   Shows the current date and time.

Note

- The machine's default mode at power on can be specified in the [Function Priority] setting under [Admin. Tools]. For [Function Priority], see page 166 "Administrator Settings".
- The display format for time and date can be specified in [Set Date/Time] under [Admin. Tools]. For setting the date and time, see page 100 "Setting the Date and Time".

Setting the Date and Time

1. **Press the [User Tools] key.**

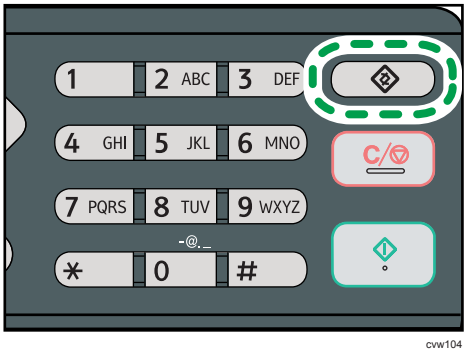

cvw104

2. **Press the [▲] or [▼] key to select [Admin. Tools], and then press the [OK] key.**
3. **If you are requested to enter a password, enter the password using the number keys, and then press the [OK] key.**
4. **Press the [▲] or [▼] key to select [Set Date/Time], and then press the [OK] key.**
5. **Press the [▲] or [▼] key to select [Set Date], and then press the [OK] key.**
6. **Press the [▲] or [▼] key to select the desired date format, and then press the [OK] key.**

   For the date and time display format, see page 166 "Administrator Settings".
7. **Enter the current date using the number keys, and then press the [OK] key.**

   You can press the [◀] or [▶] key to move between fields.
8. **Press the [▲] or [▼] key to select [Set Time], and then press the [OK] key.**
9. **Press the [▲] or [▼] key to select the desired time format, and then press the [OK] key.**
10. **Enter the current time using the number keys, and then press the [OK] key.**

    If you selected [12-hour Format], press the [▲] or [▼] key to select [AM] or [PM].

    You can press the [◀] or [▶] key to move between fields.
11. **Press the [User Tools] key to return to the initial screen.**

Note

- You can press the [Escape] key to exit to the previous level of the menu tree.
- A password for accessing the [Admin. Tools] menu can be specified in [Admin. Tools Lock]. For [Admin. Tools Lock], see page 166 "Administrator Settings".

Entering Characters

To enter characters, use keys as follows:

To enter a digit

Press a number key.

To delete a character

Press the [◀] key.

To enter a fax number

- To enter a number

  Use the number keys.

- To enter characters other than digits

  "✱": Press [✱].

  "#": Press [#].

  "+": Press [✱].

  Pause: Press the [Pause/Redial] key. "P" appears on the screen.

  Space: Press the [▶] key.

To enter a name

Letters, numbers, and symbols can be entered using the number keys.

To enter two characters consecutively that use the same number key, press the [▶] key to move the cursor before entering the second character.

Number key	Number of key press																												
	1	2	3	4	5	6	7	8	9	10	11	12	13	14	15	16	17	18	19	20	21	22	23	24	25	26	27	28	29
1	1																												
2	A	Ã	Ä	Å	Æ	B	C	Ç	a	à	á	â	ã	ä	æ	b	c	ç	2										
3	D	E	É	F	d	e	è	é	ê	ë	f	3																	
4	G	H	I	g	h	i	ì	í	î	ï	4																		
5	J	K	L	j	k	l	5																						
6	M	N	Ñ	O	Õ	Ö	Ø	Œ	m	n	ñ	o	ò	ó	ô	õ	ö	ø	œ	6									
7	P	Q	R	S	ß	p	q	r	s	7																			
8	T	U	Ü	V	t	u	ù	ú	û	ü	v	8																	
9	W	X	Y	Z	w	x	y	ÿ	z	9																			
0	0	-	.	!	"	,	;	:	^	`	_	=	/	|	'	?	$	@	%	&	+	(	)	[	]	{	}	<	>
✱	✱																												
#	#																												

CMF106

Note

- Characters you can enter depend on the setting you are configuring.

- If the number you entered is too large or too small for the setting, it will not be accepted. If you press the [OK] key, the machine will increase or decrease the number to the minimum or maximum value for the setting.

Registering Fax Destinations

This section describes how to register fax destinations in the Address Book using the control panel. For entering characters, see "Entering Characters".

The Address Book can also be edited using Web Image Monitor.

Important

- **The Address Book data could be damaged or lost unexpectedly. The manufacturer shall not be responsible for any damages resulting from such data loss. Be sure to create backup files of the Address Book data periodically. For details about creating backup files, see page 197 "Configuring the Administrator Settings".**

The Address Book can contain up to 208 entries (8 Quick Dial entries and 200 Speed Dial entries).

Quick Dial entries

Destinations registered as Quick Dial entries can be selected by pressing the corresponding One Touch button.

Speed Dial entries

Destinations registered as Speed Dial entries can be selected from the Address Book. Press the [Address Book] key, select [Search Address Book], and then select the desired entry using the [▲] or [▼] key.

6

Registering Fax Destinations Using the Control Panel

1. **Press the [User Tools] key.**

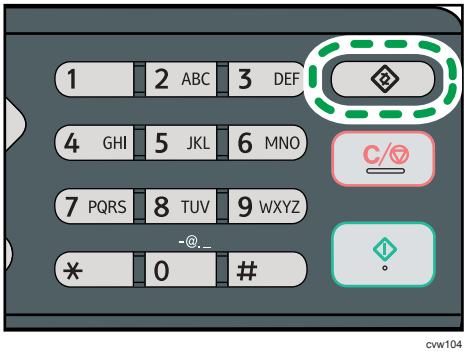

cvw104

2. **Press the [▲] or [▼] key to select [Address Book], and then press the [OK] key.**
3. **If you are requested to enter a password, enter the password using the number keys, and then press the [OK] key.**
4. **Press the [▲] or [▼] key to select [Quick Dial Dest.] or [Fax Speed Dial Dest.], and then press the [OK] key.**

5. **Press the [▲] or [▼] key to select [No.], and then enter the desired Quick Dial number (1 to 8) or Speed Dial number (1 to 200) using the number keys.**

   If a destination is already registered for the input number, the fax number and fax name registered for that number appear.

6. **Press the [▲] or [▼] key to select [Fax No.], and then enter the fax number (up to 40 characters).**
7. **Press the [▲] or [▼] key to select [Name], and then enter the fax name (up to 20 characters).**
8. **Confirm the setting, and then press the [OK] key.**
9. **Press the [User Tools] key to return to the initial screen.**

Note

- For entering characters, see page 101 "Entering Characters".
- You can press the [Escape] key to exit to the previous level of the menu tree.
- A fax number can contain 0 to 9, pause, "*", "#", and space.
- If necessary, insert a pause in the fax number. The machine pauses briefly before it dials the digits following the pause. You can specify the length of the pause time in the [Pause Time] setting under fax transmission settings. For [Pause Time], see page 140 "Fax Transmission Features Settings".
- To use tone services on a pulse-dialing line, insert "*" in the fax number. "*" switches the dialing mode from pulse to tone temporarily.
- If the machine is connected to the telephone network through a PBX, make sure to enter the outside line access number specified in [PBX Access Number] before the fax number. For [PBX Access Number], see page 166 "Administrator Settings".
- A password for accessing the [Address Book] menu can be specified in [Admin. Tools Lock]. For [Admin. Tools Lock], see page 166 "Administrator Settings".

Modifying or deleting fax destinations

1. **Press the [User Tools] key.**

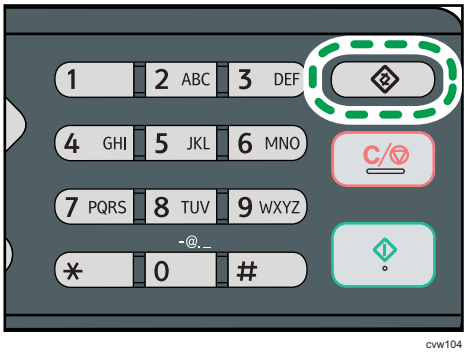

cvw104

2. **Press the [▲] or [▼] key to select [Address Book], and then press the [OK] key.**
3. **If you are requested to enter a password, enter the password using the number keys, and then press the [OK] key.**

   A password for accessing the [Address Book] menu can be specified in [Admin. Tools Lock]. For details about [Admin. Tools Lock], see page 166 "Administrator Settings".
4. **Press the [▲] or [▼] key to select [Quick Dial Dest.] or [Fax Speed Dial Dest.], and then press the [OK] key.**
5. **Press the [▲] or [▼] key to select [No.], and then enter the desired Quick Dial number (1 to 8 or Speed Dial number (1 to 200) using the number keys.**

   The fax number and fax name registered for that number appear.
6. **Press the [▲] or [▼] key to select [Fax No.], and then modify the fax number (up to 40 characters).**

   If you want to delete the fax number, press the [◀] key until the current number is deleted.
7. **Press the [▲] or [▼] key to select [Name], and then modify the fax name (up to 20 characters).**

   If you want to delete the fax name, press the [◀] key until the current name is deleted.
8. **Confirm the setting, and then press the [OK] key.**
9. **Press the [User Tools] key to return to the initial screen.**

Note

- For details about entering characters, see page 101 "Entering Characters".
- You can press the [Escape] key to exit to the previous level of the menu tree.
- A password for accessing the [Address Book] menu can be specified in [Admin. Tools Lock].

Registering Fax Destinations Using Web Image Monitor

1. **Start the Web browser and access the machine by entering its IP address.**
2. **Click [Quick Dial Destination] or [Fax Speed Dial Destination].**
3. **From the [Destination Type] list, select [Fax].**
4. **Select [Quick Dial Number] or [Speed Dial Number], and then select the registration number from the list.**
5. **Register information as necessary.**
6. **Enter the administrator password if required.**
7. **Click [Apply].**
8. **Close the Web browser.**

Fax destination settings

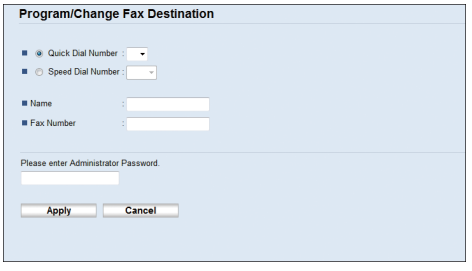

Item	Setting	Description
Quick Dial Number / Speed Dial Number	Required	Select the number to which you want to register Quick Dial or Speed Dial destination.
Name	Optional	Name of the destination. The name specified here will be shown on the screen when selecting a fax destination. Can contain up to 20 characters.
Fax Number	Required	Fax number of the destination. Can contain up to 40 characters. If the machine is connected to the telephone network through a PBX, make sure to enter the outside line access number specified in [PBX Access Number] before the fax number. For [PBX Access Number], see page 166 "Administrator Settings".

Note

- A fax number can contain 0 to 9, "P" (pause), "*", "#", "-", and space.
- If necessary, insert a pause in the fax number. The machine pauses briefly before it dials the digits following the pause. You can specify the length of the pause time in the [Pause Time] setting under fax transmission settings. For [Pause Time], see page 140 "Fax Transmission Features Settings".
- For details about using Web Image Monitor, see page 171 "Configuring the Machine Using Utilities".
- To use tone services on a pulse-dialing line, insert "*" in the fax number. "*" switches the dialing mode from pulse to tone temporarily.

Modifying fax destinations

1. **Start the Web browser and access the machine by entering its IP address.**

2. **Click [Quick Dial Destination] or [Fax Speed Dial Destination].**

   If you modify the Speed Dial entry, proceed to Step 4.

3. **Click [Fax Quick Dial Destination].**
4. **Select the entry to modify, and then click [Change].**

   If you want to delete the entry, click [Delete].

5. **Modify settings as necessary.**

   To delete the entry, confirm the entry you have selected.

6. **Enter the administrator password if required.**
7. **Click [Apply].**
8. **Close the Web browser.**

Sending a Fax

Important

- It is recommended that you call the receiver and confirm with them when sending important documents.

Selecting Transmission Mode

There are two transmission modes: Memory Transmission and Immediate Transmission.

Memory Transmission

In this mode, the machine scans several originals into memory and sends them all at once. This is convenient when you are in a hurry and want to take the document away from the machine. In this mode, you can send a fax to multiple destinations.

Immediate Transmission

In this mode, the machine scans the original and faxes it simultaneously, without storing it in memory. This is convenient when you want to send an original quickly. In this mode, you can only specify one destination.

1. **Press the [Facsimile] key, and then press the [◀] or [▶] key.**

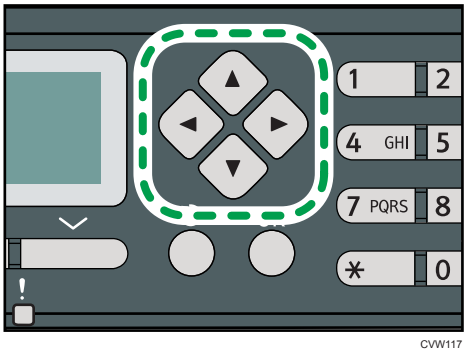

CVW117

Alternatively, you can press the [Shortcut to Func.] key if [Shortcut to Function] under administrator settings is set to [Fax Immediate TX]. For [Shortcut to Function], see page 166 "Administrator Settings".

2. **Press the [▲] or [▼] key to select [Immediate TX], and then press the [OK] key.**
3. **Press the [▲] or [▼] key to select [Off], [On], or [Next Fax Only], and then press the [OK] key.**

   For Memory Transmission, select [Off].

   For Immediate Transmission, select [On] or [Next Fax Only].
4. **Press the [User Tools] key to return to the initial screen.**

Note

- You can press the [Escape] key to exit to the previous level of the menu tree.

Basic Operation for Sending a Fax

Important

- The original in the ADF takes precedence over the original on the exposure glass if you place originals both in the ADF and on the exposure glass.

1. Press the [Facsimile] key.

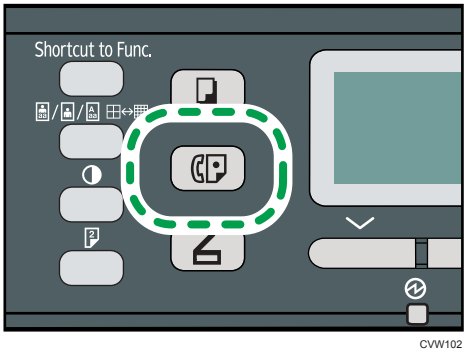

CVW102

2. Place the original on the exposure glass or in the ADF. To place the originals, see **page 51 "Placing Originals"**.
3. Enter the fax number (up to 40 characters) using the number keys, or specify a destination using the One Touch buttons or Speed Dial function. For details about entering characters, see **page 101 "Entering Characters"**. For details about specifying destinations using the One Touch buttons or Speed Dial function, see **page 112 "Specifying the Fax Destination"**.
   - If the machine is connected to the telephone network through a PBX, make sure to enter the outside line access number specified in [PBX Access Number] before the fax number. For [PBX Access Number], see page 166 "Administrator Settings".

4. **Press the [Start] key.**

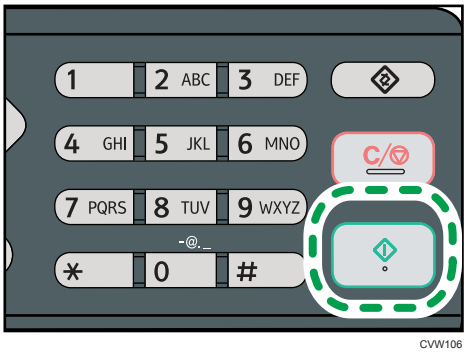

CVW106

- Depending on the machine's settings, you may be prompted to enter the fax number again if you manually entered the destination fax number. In this case, re-enter the number within 60 seconds, press [OK], and then press the [Start] key. If the fax numbers do not match, go back to Step 3. For fax number confirmation, see page 166 "Administrator Settings".
- When using the exposure glass in Memory Transmission mode, you will be prompted to place another original. In this case, proceed to the next step.

5. **If you have more originals to scan, press [Yes] within 60 seconds, place the next original on the exposure glass, and then press [OK]. Repeat this step until all originals are scanned.**

   If you do not press [Yes] within 60 seconds, the machine will start to dial the destination.

6. **When all originals have been scanned, press [#] to start sending the fax.**

Note

- A fax number can contain 0 to 9, pause, "*", "#", and space.
- If necessary, insert a pause in a fax number. The machine pauses briefly before it dials the digits following the pause. You can specify the length of the pause time in the [Pause Time] setting under fax transmission settings. For [Pause Time], see page 140 "Fax Transmission Features Settings".
- To use tone services on a pulse-dialing line, insert "*" in a fax number. "*" switches the dialing mode from pulse to tone temporarily.
- You can specify multiple destinations and broadcast the fax you are sending. For sending a fax using the broadcast function, see page 112 "Specifying the Fax Destination".
- The machine prompts you to enter the fax number twice only when you dial the destination manually. Destinations specified using the One Touch buttons, Speed Dial function, or [Pause/Redial] key need not be confirmed.
- When in Memory Transmission mode, you can enable the [Auto Redial] setting under fax transmission settings to set the machine to automatically redial the destination if the line is busy or an error occurs during transmission. For [Auto Redial], see page 140 "Fax Transmission Features Settings".

- When in Memory Transmission mode, the machine's memory may become full while scanning the originals. In this case, the screen prompts you to cancel the transmission or to send only the pages that have been scanned successfully.
- If paper is jammed in the ADF, the jammed page has not been scanned properly. When the machine is in Immediate Transmission mode, resend the fax starting from the jammed page. When in Memory Transmission mode, scan the entire originals again. For details about removing paper jammed in the ADF, see page 211 "Paper Feed Problems".

Canceling a fax

Follow the procedure below to cancel sending a fax.

When in Immediate Transmission mode

If you cancel sending a fax while the machine is scanning the original, the fax transmission process is canceled immediately. In this case, an error is displayed on the other party's machine.

When in Memory Transmission mode

If you cancel sending a fax while the machine is scanning the original, the machine will not send the document.

If you cancel sending a fax during transmission, the fax transmission process is canceled immediately. In this case, an error is displayed on the other party's machine.

1. **Press the [Facsimile] key.**

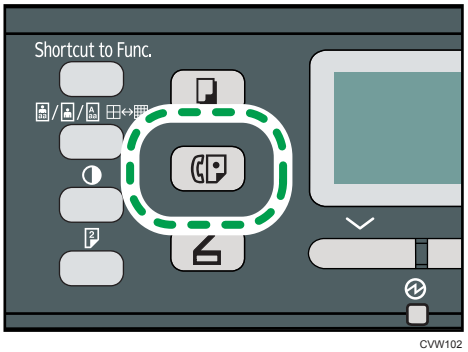

CVW102

2. **Press the [Clear/Stop] key.**

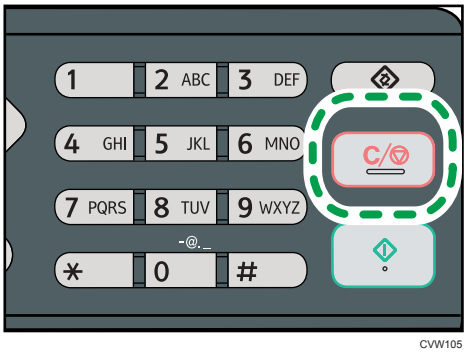

CVW105

Note

- If you cancel sending a fax while broadcasting, only the fax to the current destination is canceled. The fax will be sent to the subsequent destinations as normal. For details about sending a fax using the broadcast function, see page 112 "Specifying the Fax Destination".

6

Specifying the Fax Destination

Other than entering the destination fax number using the number keys, you can specify destinations using the following functions:

- One Touch buttons
- Speed Dial
- Broadcast function
- Redial function

Specifying the destination using the One Touch buttons

1. **Press the [Facsimile] key.**

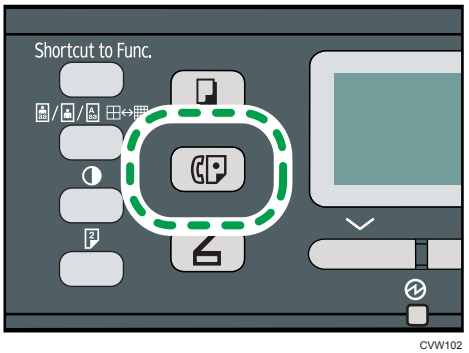

CVW102

2. **Press the One Touch button to which the desired Quick Dial entry is registered. For registering the Quick Dial entries, see page 103 "Registering Fax Destinations".**

   Press the [Shift] key if you want to use Quick Dial entries Nos. 5 to 8 before pressing a One Touch button.

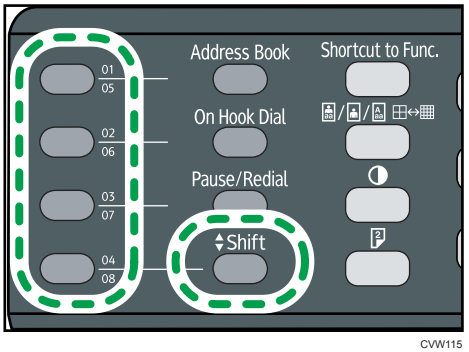

CVW115

Note

- You can check the registered names and fax numbers by printing a report. For printing the Quick Dial list, see page 153 "Printing Lists/Reports".

Specifying the destination using Speed Dial

1. **Press the [Facsimile] key.**

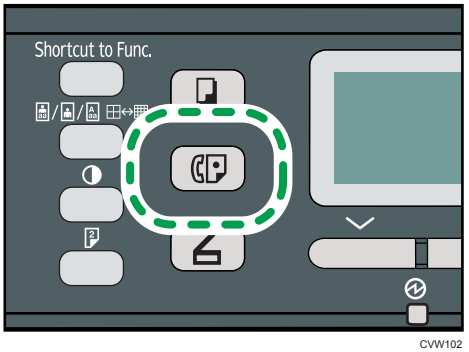

CVW102

2. **Press the [Address Book] key.**

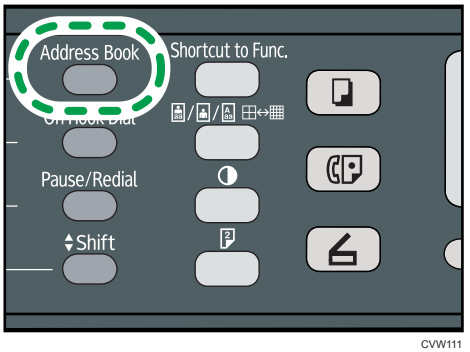

CVW111

3. **Press the [▲] or [▼] key to select [Search Address Book], and then press the [OK] key.**

   If you want to search for a specific entry by its registration number or name, use the following procedure:

   - Searching by the registration number

     Press the [Address Book] key again, enter the number using the number keys, and then press the [OK] key.

   - Searching by the name

     Enter the first letters of the name using the number keys, and then press the [OK] key. Each time you enter a character, the display changes to show the matching name.

4. **Press the [▲] or [▼] key to select the desired Speed Dial entry, and then press the [OK] key. For registering the Speed Dial entries, see page 103 "Registering Fax Destinations".**

Note

- The Address Book shows only the Speed Dial entries. Use the One Touch buttons to specify Quick Dial destinations.
- You can check the registered names and fax numbers by printing a report. For printing the Speed Dial list, see page 153 "Printing Lists/Reports".

Specifying the destination using the broadcast function

You can send a fax to multiple destinations (up to 100 destinations) simultaneously.

Faxes are sent to destinations in the order they were specified.

1. **Press the [Facsimile] key.**

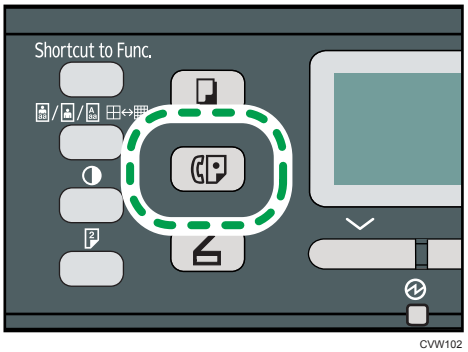

2. **Add a destination by using one of the following methods:**
   - To add a Quick Dial destination: press a corresponding One Touch button.
   - To add a Speed Dial destination: press the [Address Book] key, select [Search Address Book], select a destination, and then press the [OK] key.
   - To add a manually-specified destination: confirm that [No.key] is pressed, and then enter the destination fax number using the number keys.
3. **Press the [OK] key.**

   Press [List] to see the list of destinations that have been added so far.

   Go back to Step 2 to add further destinations.

Note

- While specifying multiple destinations, you can press the [Clear/Stop] key to clear all destinations.
- If you specify multiple destinations in Immediate Transmission mode, the mode switches to Memory Transmission mode temporarily.
- While broadcasting, pressing the [Clear/Stop] key cancels the fax to the current destination only.

Specifying the destination using the redial function

You can specify the last used destination as the destination for the current job.

This function saves time when you are sending to the same destination repeatedly, as you do not have to enter the destination each time.

1. **Press the [Facsimile] key.**

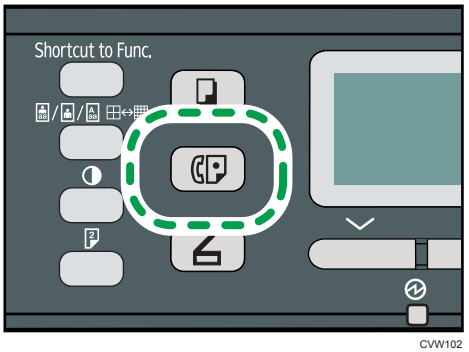

CVW102

2. **Press the [Pause/Redial] key.**

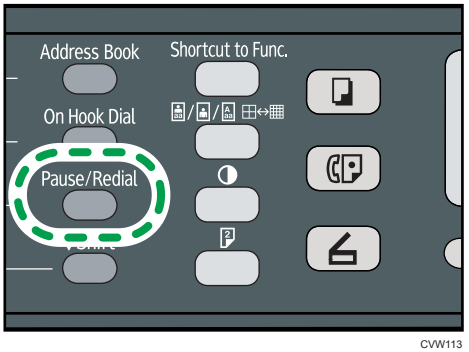

CVW113

Useful Sending Functions

You can check the status of the other party's machine easily before sending a fax by using the On Hook Dial function. Using an extra telephone, you can talk and send a fax in one call.

Important

- This function is available in Immediate Transmission mode only.

Sending a fax using On Hook Dial

The On Hook Dial function allows you to check the destination's status while listening to the tone from the internal speaker. This function is useful when you want to ensure that the fax will be received.

Important

- The On Hook Dial function cannot be used when [Fax Number Confirmation] under administrator settings is enabled.

1. **Place the original.**

2. **Press the [Facsimile] key.**

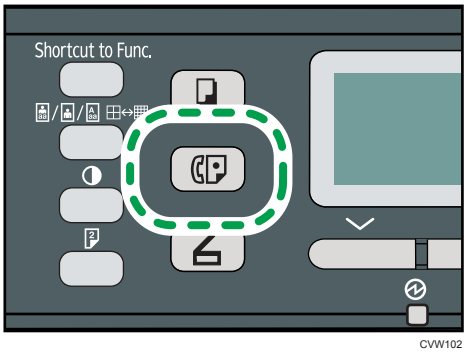

CVW102

3. **Press the [On Hook Dial] key.**

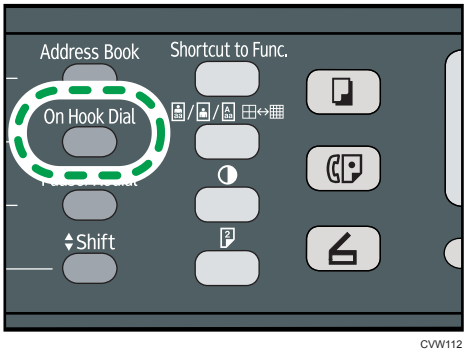

CVW112

"On Hook" appears on the screen.

4. **Specify the destination using the number keys.**
5. **If you hear a high pitched tone, press the [Start] key.**

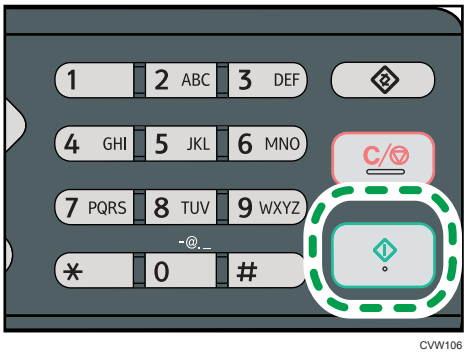

CVW106

6. **Press [TX], and then press the [Start] key.**

Note

- For details about selecting the transmission mode, see page 108 "Selecting Transmission Mode".
- For details about [Fax Number Confirmation], see page 166 "Administrator Settings".

Sending a fax after a conversation

An external telephone allows you to send a fax after finishing your conversation without having to disconnect and redial. This function is useful when you want to ensure that the fax has been received.

1. **Place the original.**
2. **Press the [Facsimile] key.**

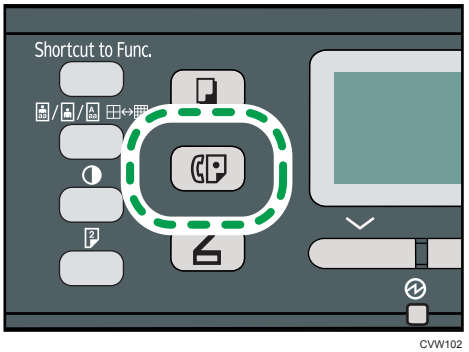

CVW102

3. **Pick up the handset.**
4. **Specify the destination using the external telephone.**
5. **When the other party answers, ask them to press their fax start button.**
6. **If you hear a high pitched tone, press the [Start] key.**

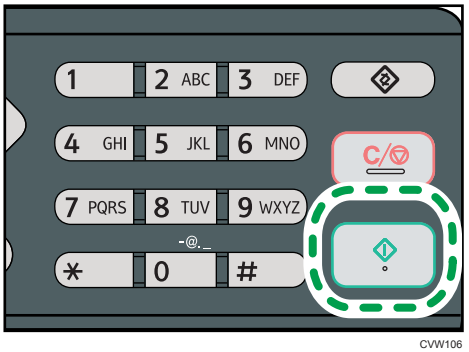

CVW106

7. **Press [TX], and then press the [Start] key.**
8. **Replace the handset.**

Specifying the Scan Settings

Adjusting image density

This section describes how to adjust image density for the current job.

There are three image density levels. The darker the density level, the darker the printout.

1. **Press the [Density] key.**

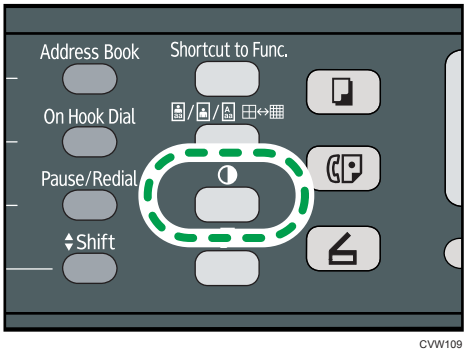

2. **Press the [▲] or [▼] key to select the desired density level, and then press the [OK] key.**

Note

- Press the [Escape] key to discard the current change and return to the initial screen.
- You can change the machine's default [Density] setting to always scan with a specific density level. For [Density], see page 140 "Fax Transmission Features Settings".
- Temporary job settings are cleared in the following cases:
  - When no input is received for the period of time specified in [System Auto Reset Timer] while the initial screen is displayed. For [System Auto Reset Timer], see page 166 "Administrator Settings".
  - When the [Clear/Stop] key is pressed while the initial screen is displayed.
  - When the machine's mode is changed.
  - When the power is turned off.
  - When the machine's default for the same setting is changed.

Specifying the resolution

This section describes how to specify the scan resolution for the current job.

There are three resolution settings:

Standard

Select this when the original is a printed or typewritten document with normal-sized characters.

Detail

Select this when the original is a document with small print.

Photo

Select this when the original contains images such as photographs or shaded drawings.

1. **Press the [Image Quality] key.**

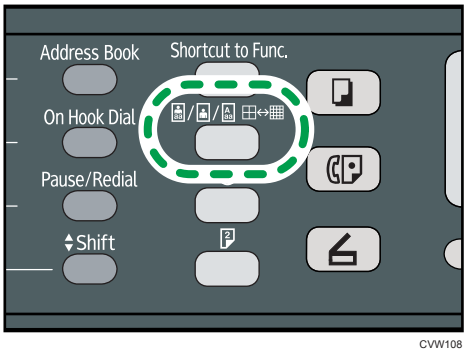

CVW108

2. **Press the [▲] or [▼] key to select the desired resolution setting, and then press the [OK] key.**

Note

- Press the [Escape] key to discard the current change and return to the initial screen.
- You can change the machine's default [Resolution] setting to always scan with a specific resolution level. For [Resolution], see page 140 "Fax Transmission Features Settings".
- Temporary job settings are cleared in the following cases:
  - When no input is received for the period of time specified in [System Auto Reset Timer] while the initial screen is displayed. For [System Auto Reset Timer], see page 166 "Administrator Settings".
  - When the [Clear/Stop] key is pressed while the initial screen is displayed.
  - When the machine's mode is changed.
  - When the power is turned off.
  - When the machine's default for the same setting is changed.

Using the Fax Function from a Computer (LAN-Fax)

This section describes how to use the fax function of the machine from a computer.

You can send a document directly from a computer through this machine to another fax machine, without printing the document.

Basic Operation for Sending Faxes from a Computer

This section describes the basic operation for sending faxes from a computer.

You can select a destination from the LAN-Fax address book or enter a fax number manually. You can send faxes to up to 100 destinations at one time.

The procedure in this section is an example based on Windows 7.

Important

- Using LAN-Fax, you can send up to ten pages (including the cover sheet) at a time.
- Before sending a fax, the machine stores all the fax data in memory. If the machine's memory becomes full while storing this data, the fax transmission will be canceled. If this happens, lower the resolution or reduce the number of pages and try again.

1. **Open the file you want to send.**
2. **On the [File] menu, click [Print...].**
3. **Select the LAN-Fax driver as the printer, and then click [Print].**
4. **Specify a destination.**
   - To specify a destination from the LAN-Fax address book:

     Select a destination from [User List:], and then click [Add to List].

     Repeat this step to add more destinations.
   - To enter a fax number directly:

     Click the [Specify Destination] tab, and enter a fax number (up to 40 digits) in [Fax Number:], and then click [Add to List].

     Repeat this step to add more destinations.
5. **To attach a cover sheet, click [Edit Cover Sheet] on the [Specify Destination] tab, and then select the [Attach a Cover Sheet] check box.**

   Edit the cover sheet as necessary, and then click [OK].

   For details about editing a fax cover sheet, see page 126 "Editing a Fax Cover Sheet".
6. **Click [Send].**

Note

- For details, see the LAN-Fax driver help.
- A fax number can contain 0 to 9, "P" (pause), "✱", "#", "-", and space.
- If necessary, insert a pause in a fax number. The machine pauses briefly before it dials the digits following the pause. You can specify the length of the pause time in the [Pause Time] setting under fax transmission settings. For [Pause Time], see page 140 "Fax Transmission Features Settings".
- To use tone services on a pulse-dialing line, insert "✱" in a fax number. "✱" switches the dialing mode from pulse to tone temporarily.
- To delete an entered destination, select the destination in the [Destination List:], and then click [Delete from List].
- You can register the fax number you entered in the [Specify Destination] tab in the LAN-Fax Address Book. Click [Save to Address Book] to open the dialog box for registering a destination.

Canceling a fax

You can cancel sending a fax using either the machine's control panel or your computer, depending on the status of the job.

Canceling while the machine is receiving a fax from the computer

If the machine is shared by multiple computers, be careful not to cancel the fax of another user.

1. **Double-click the printer icon on the task bar of your computer.**
2. **Select the print job you want to cancel, click the [Document] menu, and then click [Cancel].**
3. **Click [Yes].**

Canceling while sending a fax

Cancel the fax using the control panel.

1. **Press the [Facsimile] key.**

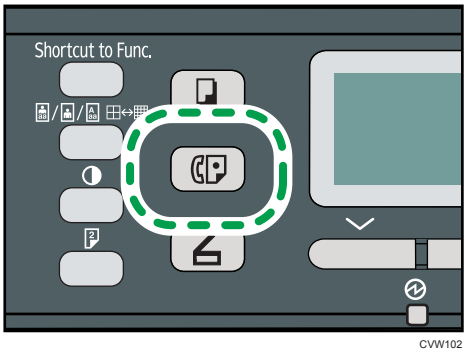

CVW102

2. **Press the [Clear/Stop] key.**

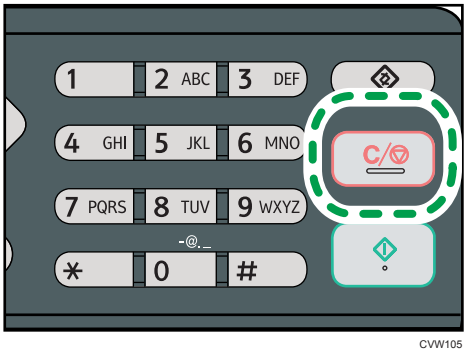

Configuring Transmission Settings

This section describes how to configure transmission settings in the LAN-Fax driver's properties.

Properties are set separately for each application.

1. **On the [File] menu, click [Print...].**
2. **Select the LAN-Fax driver as the printer, and then click a button such as [Preferences].**

   LAN-Fax driver properties dialog box appears.
3. **Click the [Setup] tab.**
4. **Configure settings as necessary, and then click [OK].**

   For details about the settings, see the LAN-Fax driver help.

Configuring the LAN-Fax Address Book

This section describes the LAN-Fax address book. Configure the LAN-Fax address book on the computer. The LAN-Fax address book allows you to specify LAN-Fax destinations quickly and easily.

The LAN-Fax address book can contain up to 1000 entries, including individual destinations and groups of destinations.

Opening the LAN-Fax address book

1. **On the [Start] menu, click [Devices and Printers].**
2. **Right-click the LAN-Fax driver icon, and then click [Printing Preferences].**
3. **Click the [Address Book] tab.**

Registering destinations

1. **Open the LAN-Fax address book, and then click [Add User].**
2. **Enter the destination information.**

   You must enter a contact name and fax number.
3. **Click [OK].**

Modifying destinations

1. **Open the LAN-Fax address Book, select the destination you want to modify from the [User List:], and then click [Edit].**
2. **Modify information as necessary, and then click [OK].**

   Click [Save as new User] if you want to register a new destination with similar information. This is useful when you want to register a series of destinations that contain similar information. To close the dialog box without modifying the original destination, click [Cancel].

Registering groups

1. **Open the LAN-Fax address Book, and then click [Add Group].**
2. **Enter the group name in [Group Name].**
3. **Select the destination you want to include in the group from [User List:], and then click [Add].**

   To delete a destination from a group, select the destination you want to delete from [List of Group Members:], and then click [Delete from List].
4. **Click [OK]**

Modifying groups

1. **Open the LAN-Fax address Book, select the group you want to modify from the [User List:], and then click [Edit].**
2. **To add a destination to the group, select the destination you want to add from [User List:] and click [Add].**
3. **To delete a destination from the group, select the destination you want to delete from [List of Group Members:], and then click [Delete from List].**
4. **Click [OK].**

Deleting individual destinations or groups

1. **Open the LAN-Fax Address Book, select the destination you want to delete from [User List:], and then click [Delete].**

   A confirmation message appears.

2. **Click [Yes].**

Exporting/Importing LAN-Fax Address Book data

Important

- The following procedure is based on Windows 7 as an example. If you are using another operating system, the procedure might vary slightly

Exporting LAN-Fax Address Book data

LAN-Fax Address Book data can be exported to a file in CSV (Comma Separated Values) format.

Follow this procedure to export LAN-Fax Address Book data.

1. **Open the LAN-Fax Address Book, and then click [Export].**
2. **Navigate to the location to save the LAN-Fax Address Book data, specify a name for the file, and then click [Save].**

Importing LAN-Fax Address Book data

LAN-Fax Address Book data can be imported from files in CSV format. You can import address book data from other applications if the data is saved as a CSV file.

1. **Open the LAN-Fax Address Book, and then click [Import].**
2. **Select the file containing the address book data, and then click [Open].**

   A dialog box for selecting the items to import appears.

3. **For each field, select an appropriate item from the list.**

   Select [*empty*] for fields for which there is no data to import. Note that [*empty*] cannot be selected for [Name] and [Fax].

4. **Click [OK].**

   For details about the settings, see the LAN-Fax driver help.

Note

- CSV files are exported using Unicode encoding.
- LAN-Fax Address Book data can be imported from CSV files whose character encoding is Unicode or ASCII.
- Group data cannot be exported or imported.

- Up to 1000 destinations can be registered in the LAN-Fax Address Book. If this limit is exceeded during importing, the remaining destinations will not be imported.

Editing a Fax Cover Sheet

1. **On the [File] menu, click [Print...].**
2. **Select the LAN-Fax driver as the printer, and then click [Print].**
3. **Click the [Specify Destination] tab, and then click [Edit Cover Sheet].**
4. **Configure settings as necessary, and then click [Print].**

   For details about the settings, see the LAN-Fax driver help.

Receiving a Fax

Important

- When receiving an important fax, we recommend you confirm the contents of the received fax with the sender.
- The machine may not be able to receive faxes when the amount of free memory space is low.

Note

- An external telephone is required to use this machine as a telephone.
- Only A4, Letter, or Legal size paper can be used for printing faxes.

Selecting Reception Mode

The reception modes are as follows:

When using the machine only as a fax machine

Select the following mode when no external telephone or telephone answering device is connected:

- Fax Only mode (auto reception)

  In this mode, the machine is used only as a fax machine and receives faxes automatically.

When using the machine with an external device

Select one of the following modes when an external telephone or telephone answering device is connected:

- FAX/TEL Manual mode (manual reception)

  In this mode, you must answer calls with an external telephone. If a call is a fax call, you must start the fax reception manually.
- Fax Only mode (auto reception)

  In this mode, the machine automatically answers all incoming calls in fax reception mode.
- FAX/TAD mode (auto reception)

  In this mode, you can use the machine with an external telephone answering device.

1. **Press the [User Tools] key.**

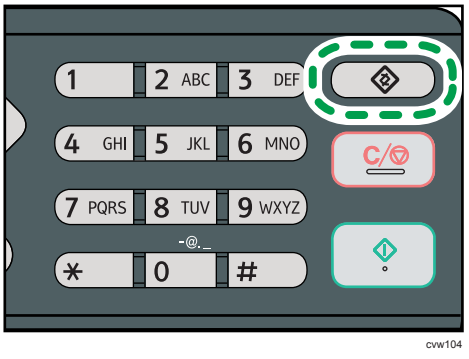

2. **Press the [▲] or [▼] key to select [Fax Features], and then press the [OK] key.**
3. **Press the [▲] or [▼] key to select [Reception Settings], and then press the [OK] key.**
4. **Press the [▲] or [▼] key to select [Switch RX Mode], and then press the [OK] key.**
5. **Press the [▲], [▼], [◀], or [▶] key to select the desired reception mode, and then press the [OK] key.**
6. **Press the [User Tools] key to return to the initial screen.**

6

Note

- You can press the [Escape] key to exit to the previous level of the menu tree.
- In FAX/TAD mode, the machine automatically starts to receive faxes after the external telephone answering device rings the number of times specified in [Total No. of Rings (TAD)] under [Fax Features]. Make sure to set the external telephone answering device to answer calls before the machine starts to receive faxes. For [Total No. of Rings (TAD)], see page 142 "Fax Features Settings".

Receiving a fax in FAX/TEL Manual mode

1. **Pick up the handset of the external telephone to answer the call.**

   A normal telephone call starts.
2. **When you hear a fax calling tone or no sound, press the [Facsimile] key, and then press the [Start] key.**
3. **Press [RX].**
4. **Press the [Start] key.**
5. **Replace the handset.**

Receiving a fax in Fax Only mode

When the reception mode is set to Fax Only mode, the machine automatically answers all incoming calls in fax reception mode.

Note

- You can specify the number of times the machine rings before answering a call in the [Number of Rings] setting under [Fax Features]. For [Number of Rings], see page 142 "Fax Features Settings".
- If you answer a call with the external telephone while the machine is ringing, a normal telephone call starts. If you hear a fax calling tone or no sound, receive the fax manually. To receive the fax manually, see page 128 "Receiving a fax in FAX/TEL Manual mode".

Receiving a fax in FAX/TAD mode

When the reception mode is set to FAX/TAD mode, the external telephone answering device answers and records messages when the machine receives telephone calls. If the incoming call is a fax call, the machine receives the fax automatically.

1. When there is an incoming call, the external telephone answering device rings the number of times specified in [Total No. of Rings (TAD)] under [Fax Features]. For [Total No. of Rings (TAD)], see page 142 "Fax Features Settings".

   If the external telephone answering device does not answer, the machine starts to receive the fax automatically.
2. If the external telephone answering device answers, the machine monitors silence on the line for 30 seconds (silence detection).
   - If a fax calling tone or no sound is detected, the machine starts to receive the fax automatically.
   - If a voice is detected, a normal telephone call starts. The external telephone answering device records messages.

Note

- You can manually receive a fax during silence detection. To receive the fax manually, see page 128 "Receiving a fax in FAX/TEL Manual mode".
- Silence detection does not terminate for 30 seconds even if the external telephone answering device goes on-hook, unless you press the [Clear/Stop] key and disconnect the call.

Lists/Reports Related to Fax

The lists and reports related to the fax function are as follow:

- Fax Journal

  Prints a fax transmission and reception journal for the last 50 jobs.

- TX Status Report

  Prints out the latest Transmission result.

- TX Standby File List

  Prints a list of unsent fax jobs remaining in the machine's memory.

- Power Failure Report

  Prints a report when the machine's power has been interrupted while sending or receiving a fax, or images stored in the machine's memory have been lost due to the machine being turned off for a prolonged period of time.

- Fax Speed Dial List

  Prints a list of Speed Dial entries.

Note

- For more information on Fax Journal and TX Status Report, see page 142 "Fax Features Settings".

7. Configuring the Machine Using the Control Panel

Basic Operation

There are two main ways to access the machine settings:

- Press the [User Tools] key to access the System or Network settings.
- Press the [◀] or [▶] key to access the Copy, Scan, or Fax settings.

  To check which category the function you want to configure belongs to, see page 133 "Menu Chart".

1. **If you want to configure the machine's system settings, press the [User Tools] key.**

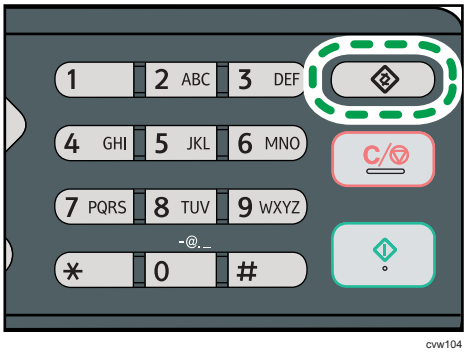

cvw104

Otherwise, press the [◀] or [▶] key while "Ready" is displayed on the initial screen of the Copy, Scan, and Fax settings.

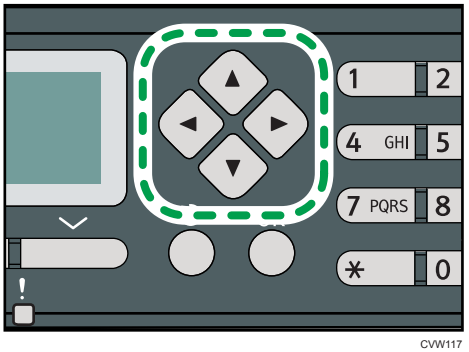

CVW117

2. **Press the [▼] or [▲] key to select the settings you want to use.**

   For a list of available items, see page 133 "Menu Chart".

If you select [Address Book], [Network Settings], or [Admin. Tools] menu, you might be requested to enter a password. Enter the four-digit password, and then press the [OK] key. For details about the password, see [Admin. Tools Lock] on page 166 "Administrator Settings".

3. **To confirm setting items and values displayed, press the [OK] key.**
4. **To go back to the previous item, press the [Escape] key.**

Note

- To return to the initial screen, press the [Escape] key the same amount of times as the number of selected items, or press the [User Tools] key once.

Menu Chart

This section lists the parameters included in each menu.

For details about configuring the machine using Web Image Monitor, see page 171 "Configuring the Machine Using Utilities".

Important

- Some items might not appear depending on the model type or machine's configuration.
- Some items can also be configured using Web Image Monitor.

Copier Features ([◀] [▶] key setting)

[Select Paper], [Sort], [Original Type], [Density], [Reduce/Enlarge], [Duplex/Combine], [ID Card Center Line]

Scan Settings ([◀] [▶] key setting)

[Scan Size], [Scanning Mode], [Max. E-mail Size], [Density], [Resolution], [Compression (Color)], [Limitless Scan], [File Type]

Fax TX Settings ([◀] [▶] key setting)

[Immediate TX], [Resolution], [Density], [Pause Time], [Auto Redial], [Print Fax Header]

Fax Features ([User Tools] key setting)

[Reception Settings], [Delete TX Standby File], [Communication Settings], [Report Print Settings]

Address Book ([User Tools] key setting)

[Quick Dial Dest.], [Fax Speed Dial Dest.]

System Settings ([User Tools] key setting)

[Adjust Sound Volume], [Tray Paper Settings], [I/O Timeout], [Auto Continue], [Toner Saving], [Supplies Status], [Scanner Carriage], [Printer Registration], [Low Humidity Mode], [Image Density]

Network Settings ([User Tools] key setting)

[Ethernet], [Wi-Fi] (Type 2 model only), [IPv4 Configuration], [IPv6 Configuration]

Print List/Report ([User Tools] key setting)

[Configuration Page], [Fax Journal], [TX Standby File List], [Quick Dial Dest. List], [Fax Speed Dial Dest. List], [Scanner Dest. List], [Scanner Journal], [Maintenance Page]

Admin. Tools ([User Tools] key setting)

[Set Date/Time], [Program Fax Information], [Dial/Push Phone], [PSTN / PBX], [PBX Access Number], [Function Priority], [System Auto Reset Timer], [Energy Saver Mode], [Language], [Country], [Reset Settings], [Shortcut to Function], [Admin. Tools Lock], [IPsec], [Fax Number Confirmation]

Printer Features ([User Tools] key setting)

[List/Test Print], [System], [PCL Menu]

Copier Features Settings

Select Paper

Specifies the paper size used for printing copies.

When a tray is selected, the machine prints from that tray only.

When a paper size is selected, the machine checks the trays for the paper of the specified size in the order of priority as set in [Paper Tray Priority] under system settings.

If multiple trays contain valid paper, the first tray the machine finds will be used for printing; when that tray runs out of paper, the machine automatically switches to the next tray to continue printing.

Default: [Tray 1]

- Tray 1
- Bypass Tray
- A4
- 8 1/2 × 11
- 16K

Sort

Configures the machine to sort the output pages into sets when making multiple copies of a multi-page document (P1, P2, P1, P2...).

Default: [Off]

- On
- Off

Original Type

Specifies the content of originals, to optimize copy quality.

Default: [Mixed]

- Mixed

  Select this when the original contains both text and photographs or pictures.
- Text

  Select this when the original contains only text and no photographs or pictures.
- Photo

  Select this when the original contains photographs or pictures. Use this mode for the following types of original:
  - Photographs
  - Pages that are entirely or mainly photographs or pictures, such as magazine pages.

Density

Specifies the image density for photocopying.

Default: ■■■□□

- ■□□□□ (Lightest)
- ■■□□□
- ■■■□□
- ■■■■□
- ■■■■■ (Darkest)

Reduce/Enlarge

Specifies the percentage by which copies are enlarged or reduced. Also, ID card copying can be specified.

Default: [100%]

- 50%
- 71%
- 82%
- 93%
- 100%
- 122%
- 141%
- 200%
- 400%
- ID Card Copy

  Sets the machine to copy the front and back sides of an ID card, or other small document, onto the front of a single sheet of paper.

  Note that enabling this setting automatically disables combined copying.
- Zoom 25-400%

Duplex/Combine

Specifies combined copying. Select a copy mode according to your original and how you want the copy outputs to appear. For more details, see page 69 "Making Combined/2-sided Copies".

Note that enabling combined copying automatically disables ID card copying.

Default: [Off]

- Off
- 1Sd 2Orig->Comb 2on1 1Sd

  Copy will be made on 1 side, on which 2 pages of 1-sided original will be printed.

    - Portrait
    - Landscape
- 1Sd 4Orig->Comb 4on1 1Sd

  Copy will be made on 1 side, on which 4 pages of 1-sided original will be printed.
    - Portrait: L to R
    - Portrait: T to B
    - Landscape: L to R
    - Landscape: T to B
- 1 Sided Orig->2 Sided Copy

  Copies two 1-sided pages on one 2-sided page.
    - Portrait: T to T
    - Portrait: T to B
    - Landscape: T to T
    - Landscape: T to B
- 1Sd 4Orig->Comb 2on1 2Sd

  Copies four 1-sided pages on two 2-sided pages.
    - Portrait: T to T
    - Portrait: T to B
    - Landscape: T to T
    - Landscape: T to B
- 1Sd 8Orig->Comb 4on1 2Sd

  Copies eight 1-sided pages on four 2-sided pages.
    - Portrait: L to R, T to T
    - Portrait: L to R, T to B
    - Portrait: T to B, T to T
    - Portrait: T to B, T to B
    - Landscape: L to R, T to T
    - Landscape: L to R, T to B
    - Landscape: T to B, T to T
    - Landscape: T to B, T to B
- Manual 2 Sided Scan Mode

  Select this mode to make 2-sided copies using the exposure glass.
- ID Card Center Line

Specify whether to draw a center line when making ID card copy.

- Print
- Do not Print

Scanner Features Settings

Scan Size

Specifies the scanning size according to the size of the original.

Default: [A4]

- 8 1/2 × 14, 8 1/2 × 11, 8 1/2 × 5 1/2, 7 1/4 × 10 1/2, A4, B5, A5, Custom Size

Scanning Mode

Specifies the scanning mode using the control panel.

Default: [Color]

- B&W

  The machine creates 1-bit black-and-white images. Images contain only black and white colors.

- Color

  The machine creates 8-bit color images. Images are full color.

- Gray Scale

  The machine creates 8-bit black-and-white images. Images contain black and white, and intermediate gray colors.

Max. E-mail Size

Specifies the maximum size of a file that can be sent by e-mail.

Default: [1 MB]

- 1 MB
- 2 MB
- 3 MB
- 4 MB
- 5 MB
- No Limit

Density

Specifies the image density for scanning originals.

Default: ■■■□□

- ■□□□□ (Lightest)
- ■■□□□
- ■■■□□
- ■■■■□
- ■■■■■ (Darkest)

Resolution

Specifies the resolution for scanning the original.

Default: [300 × 300dpi]

- 100 × 100dpi
- 150 × 150dpi
- 200 × 200dpi
- 300 × 300dpi
- 400 × 400dpi
- 600 × 600dpi

Compression (Color)

Specifies the color compression ratio for JPEG files. The lower the compression ratio, the higher the quality but greater the file size.

Default: [Medium]

- Low
- Medium
- High

Limitless Scan

Sets the machine to request next originals when scanning with the exposure glass.

Default: [Off]

- Off
- On

File Type

Specifies whether to create a multi-page file containing all pages or separate single-page files when scanning multiple pages.

Note that a scanned file can contain multiple pages only when the file format is PDF or TIFF. If the file format is JPEG, a single-page file is created for each scanned page.

Default: [Multi-page]

- Multi-page
- Single Page

Fax Transmission Features Settings

Immediate TX

Sets the machine to send a fax immediately when the original is scanned.

Default: [Off]

- Off

  Select this when using Memory Transmission.

- On

  Select this when using Immediate Transmission.

- Next Fax Only

  Select this when using Immediate Transmission for the next transmission only.

Resolution

Specifies the resolution to use for scanning originals.

Default: [Standard]

- Standard

  Select this when the original is a printed or typewritten document with normal-sized characters.

- Detail

  Select this when the original is a document with small print.

- Photo

  Select this when the original contains images such as photographs or shaded drawings.

Density

Specifies the image density to use for scanning originals.

Default: [Normal]

- Light
- Normal
- Dark

Pause Time

Specifies the length of pause time when a pause is inserted between the digits of a fax number.

Default: 3 seconds

- 1 to 15 seconds

Auto Redial

Sets the machine to redial the fax destination automatically when the line is busy or a transmission error occurs, if the machine is in Memory Transmission mode. The number of redial attempts is

preset to two or three times, depending on the [Country] setting under [Admin. Tools], in five-minute intervals.

Default: [On]

- Off
- On

Print Fax Header

Sets the machine to add a header to every fax you send. The header includes the current date and time, user fax name and fax number of the machine, job ID, and page information.

Default: [On]

- Off
- On

Fax Features Settings

Reception Settings

Specifies the settings for receiving a fax.

- Switch RX Mode

  Specifies the reception mode.

  Default: [Fax Only]

  - Fax Only

    The machine automatically answers all incoming calls in fax reception mode.

  - FAX/TEL(Mnl.)

    The machine rings when it receives incoming calls. The machine receives faxes only when you manually receive faxes.

  - FAX/TAD

    The machine receives faxes automatically when a fax call is received. Otherwise, the connected telephone answering device answers the call.

- Auto Reduction

  Sets the machine to reduce the size of a received fax if it is too large to print on a single sheet of paper.

  Note that the machine only reduces the size down to 74%. If further reduction is required to fit the fax on a single sheet, it will be printed on separate sheets without being reduced.

  Default: [On]

  (Default may be [Off] depending on the [Country] setting under [Admin. Tools].)

  - Off
  - On

- Total No. of Rings (TAD)

  Specifies the number of times the external telephone answering device rings before the machine starts to receive faxes in FAX/TAD mode.

  Default: 5 times

  - 1 to 20 times, in increments of 1

- Number of Rings

  Specifies the number of times the machine rings before it starts to receive faxes in Fax Only mode.

  Default: 1 times

  - 1 to 5 times

- 2 Sided Print

Specifies the 2 sided print.

Default: [Off]

- Off
- 2 Sided Portrait: T to T
- 2 Sided Portrait: T to B

Delete TX Standby File

Deletes unsent fax jobs remaining in the machine's memory. The machine can store up to 5 unsent fax jobs.

This function is only performed when selected.

- Delete Selected File

  To delete a fax job, select the desired job, and then select [Yes]. Selecting [No] exits to the previous level of the menu tree without deleting the fax job.

- Delete All Files

  To delete the fax jobs, select [Yes]. Selecting [No] exits to the previous level of the menu tree without deleting the fax job.

Communication Settings

- ECM Transmission

  Sets the machine to automatically resend parts of the data that are lost during transmission.

  Default: [On]

  - Off
  - On

- ECM Reception

  Sets the machine to automatically receive parts of the data that are lost during reception.

  Default: [On]

  - Off
  - On

- Dial Tone Detect

  Sets the machine to detect a dial tone before the machine begins to dial the destination automatically.

  Default: [Detect]

  - Detect
  - Not Detect

- Transmission Speed

  Specifies the transmission speed for the fax modem.

Default: [33.6 Kbps]

- 33.6 Kbps
- 14.4 Kbps
- 9.6 Kbps
- 7.2 Kbps
- 4.8 Kbps
- 2.4 Kbps

- Reception Speed

  Specifies the reception speed for the fax modem.

  Default: [33.6 Kbps]

  - 33.6 Kbps
  - 14.4 Kbps
  - 9.6 Kbps
  - 7.2 Kbps
  - 4.8 Kbps
  - 2.4 Kbps

Report Print Settings

- Print TX Status Report

  Sets the machine to print a transmission report automatically after a fax transmission.

  When the machine is in Immediate Transmission mode, the image of the original will not be reproduced on the report, even if [Error Only (Image Attached)] or [Every TX (Image Attached)] is selected.

  Note that if a memory error occurs for LAN-Fax transmission, a transmission report will always be printed regardless of this setting.

  The transmission report will be printed on A4 or Letter size paper.

  Default: [Error Only (Image Attached)]

  - Error Only

    Prints a report when a transmission error occurs.

  - Error Only (Image Attached)

    Prints a report with an image of the original when transmission error occurs.

  - Every TX

    Prints a report for every fax transmission.

  - Every TX (Image Attached)

    Prints a report with an image of the original for every fax transmission.

    - Do not Print
- Print Fax Journal

  Sets the machine to print a fax journal automatically for every 50 fax jobs (both sent and received).

  The fax journal will be printed on A4 or Letter size paper.

  Default: [Auto Print]

    - Auto Print
    - Do not Auto Print

Address Book Settings

Quick Dial Dest.

Specifies the fax number and name for Quick Dial entries. You can register up to 8 Quick Dial entries.

- No.

  Specifies the Quick Dial number.

- Fax No.

  Specifies the fax number for Quick Dial entries. The fax number can contain up to 40 characters, including 0 to 9, pause, "*", "#", and space.

- Name

  Specifies the name for Quick Dial entries. The name can contain up to 20 characters.

Fax Speed Dial Dest.

Specifies the fax number and name for Speed Dial entries. You can register up to 200 Speed Dial entries.

- No.

  Specifies the Speed Dial number.

- Fax No.

  Specifies the fax number for Speed Dial entries. The fax number can contain up to 40 characters, including 0 to 9, pause, "*", "#", and space.

- Name

  Specifies the name for Speed Dial entries. The name can contain up to 20 characters.

System Settings

Adjust Sound Volume

Specifies the volume of the sounds produced by the machine.

Default: [Low] for [Panel Key Sound], and [Middle] for other parameters.

- Panel Key Sound

  Specifies the volume of the beep that sounds when a key is pressed.

  - Off
  - Low
  - Middle
  - High
- On Hook Mode

  Specifies the volume of the sound from the speaker during on hook mode.

  - Off
  - Low
  - Middle
  - High
- Job End Tone

  Specifies the volume of the beep that sounds when a job is complete.

  - Off
  - Low
  - Middle
  - High
- Job Error Tone

  Specifies the volume of the beep that sounds when a fax transmission error occurs.

  - Off
  - Low
  - Middle
  - High
- Alarm Volume

  Specifies the volume of the alarm that sounds when an operation error occurs.

  - Off
  - Low

- Middle
- High

Tray Paper Settings

- Paper Type: Tray 1

  Specifies the paper type for tray 1.

  Default: [Plain Paper]

  Thin Paper, Plain Paper, Recycled Paper, Color Paper, Letterhead, Preprinted Paper, Prepunched Paper, Label Paper, Bond Paper, Cardstock, Thick Paper 1, Thick Paper 2

- Paper Type: Bypass Tray

  Specifies the paper type for bypass tray.

  Default: [Plain Paper]

  Thin Paper, Plain Paper, Recycled Paper, Color Paper, Letterhead, Preprinted Paper, Prepunched Paper, Label Paper, Bond Paper, Cardstock, Envelope, Thick Paper 1, Thick Paper 2, OHP

- Paper Size: Tray 1

  Specifies the paper size for tray 1.

  Default: Region A [A4], Region B [8 1/2 × 11]

  A4, B5 JIS, A5, B6 JIS, A6, 8 1/2 × 14, 8 1/2 × 11, 5 1/2 × 8 1/2, 7 1/4 × 10 1/2, 8 × 13, 8 1/2 × 13, 8 1/4 × 13, 16K, Custom Size

- Paper Size: Bypass Tray

  Specifies the paper size for bypass tray.

  Default: Region A [A4], Region B [8 1/2 × 11]

  A4, B5 JIS, A5, B6 JIS, A6, 8 1/2 × 14, 8 1/2 × 11, 5 1/2 × 8 1/2, 7 1/4 × 10 1/2, 16K, 4 1/8 × 9 1/2, 3 7/8 × 7 1/2, C5 Env, C6 Env, DL Env, Custom Size

- Bypass Tray Priority

  Specifies how print jobs using the bypass tray are handled.

  Default: [Machine Setting(s)]

  - Machine Setting(s)

    The machine prints all print jobs according to the machine's settings.

    An error will occur if the paper size/type settings of the machine and printer driver do not match.

  - Any Size/Type

    The machine prints all print jobs according to the printer driver's settings.

Printing proceeds even if the paper size/type settings of the machine and printer driver do not match. However, if the paper is too small for the print job, the printed image will be cropped.

- Any Custom Size/Type

  The machine prints custom size print jobs according to the printer driver's settings and prints standard size print jobs according to the machine's settings.

  For custom size print jobs, printing proceeds even if the paper size/type settings of the machine and printer driver do not match. However, if the paper is too small for the print job, the printed image will be cropped.

  For standard size print jobs, an error will occur if the paper size/type settings of the machine and printer driver do not match.

- Paper Tray Priority

  Specifies the tray that the machine checks first for paper that can be used for the job when a tray is set to be selected automatically.

  If multiple trays contain valid paper, the first tray the machine finds will be used for printing; when that tray runs out of paper, the machine automatically switches to the next tray to continue printing.

  Default for all functions: [Tray 1]

  - Printer

    Selects a tray to check first when automatic tray selection is specified for the print job.

    - Tray 1
    - Bypass Tray

  - Copier

    Selects a tray to check first when [A4], [8 1/2 × 11], or [16K] is selected for [Select Paper] under copy settings.

    - Tray 1
    - Bypass Tray

- Size Mismatch Detection

  Sets the machine to report an error if the paper size does not match the print job's settings.

  Default: [Off]

  - Off
  - On

I/O Timeout

- USB

  Specifies how many seconds the machine waits for print data, if the data is interrupted while it is being sent from the computer via USB. If the machine does not receive any more data within

the time specified here, the machine only prints the data it has received. If printing is frequently interrupted by data from other ports, increase the timeout period.

Default: [60 sec.]

- 15 sec.
- 60 sec.
- 300 sec.

- Network

  Specifies how many seconds the machine waits for print data, if the data is interrupted while it is being sent from the computer via network. If the machine does not receive any more data within the time specified here, the machine only prints the data it has received. If printing is frequently interrupted by data from other ports, increase the timeout period.

  Default: [60 sec.]

  - 15 sec.
  - 60 sec.
  - 300 sec.

- Fixed USB Port

  Specifies whether the same printer/LAN-Fax driver can be used for multiple machines or not under USB connection.

  Default: [Off]

  - Off

    You must install the printer/LAN-Fax driver separately for individual machines, because the machine other than the original will be recognized as a new device upon USB connection.

  - On

    The same printer/LAN-Fax driver you have installed in your computer can be used with any machine other than the one originally used for installation, if the machine is of the same model.

Auto Continue

Sets the machine to ignore an error with paper size or type and continue printing. The printing stops temporarily when an error is detected, and restarts automatically after about ten seconds using the settings made on the control panel.

Default: [Off]

- Off
- On

Toner Saving

Sets the machine to print using a reduced amount of toner (for prints made by the copier function only).

Default: [Off]

- Off
- On

Supplies Status

Displays information about consumables. To replace the fusing unit, transfer roller, or paper feed roller, contact your sales or service representative.

- Print Cart.:

  Displays the remaining amount of toner.

  ▩▩▩▩▩ (New), ▩▩▩▩□, ▩▩▩□□, ▩▩□□□, ▩□□□□, □□□□□ (Needs replacing)

- Fusing Unit:

  Displays the remaining life of the fusing unit.

  ▩▩▩▩▩ (New), ▩▩▩▩□, ▩▩▩□□, ▩▩□□□, ▩□□□□, □□□□□ (Needs replacing)

- Transfer Roller:

  Displays the remaining life of the transfer roller.

  ▩▩▩▩▩ (New), ▩▩▩▩□, ▩▩▩□□, ▩▩□□□, ▩□□□□, □□□□□ (Needs replacing)

- Paper Feed Roller:

  Displays the remaining life of the paper feed roller.

  ▩▩▩▩▩ (New), ▩▩▩▩□, ▩▩▩□□, ▩▩□□□, ▩□□□□, □□□□□ (Needs replacing)

Scanner Carriage

- Lock Scnr. Carriage

  Returns the scanning unit inside the machine to its original position. Before transporting the machine, use this function to return the scanning unit to its original position.

  Press [Yes] to return the scanning unit to its original position. Press [No] to exit to the previous level of the menu tree without returning the scanning unit to its original position.

Printer Registration

Adjust the registration of each tray if necessary. You can adjust the registration value between -15 and +15 (that is, -1.5 and +1.5 mm, in 0.1 mm increments).

Default: 0 for all parameters

- Horiz.: Tray 1

  Select this to adjust the tray 1 registration horizontally.
- Vert.: Tray 1

  Select this to adjust the tray 1 registration vertically.
- Horiz.: Bypass Tray

  Select this to adjust the bypass tray registration horizontally.
- Vert.: Bypass Tray

  Select this to adjust the bypass tray registration vertically.
- Horiz.: Duplex: Back

  Select this to adjust the registration of the back of duplex printing horizontally.
- Vert.: Duplex: Back

  Select this to adjust the registration of the back of duplex printing vertically.

Low Humidity Mode

If the machine is used in a room where humidity level is low, black lines of a few millimeters thick may appear on printouts with 75-millimeter spaces in between. Selecting [On] for this setting may prevent these lines from appearing (wait for about one day until this setting becomes effective).

Note that when this setting is enabled, the machine automatically performs self-maintenance in every 10 minutes.

Default: [Off]

- On
- Off

Image Density

Adjusts the density of images on prints.

Default: **0**

- -3 to +3

Printing Lists/Reports

Printing the Configuration Page

1. **Press the [User Tools] key.**

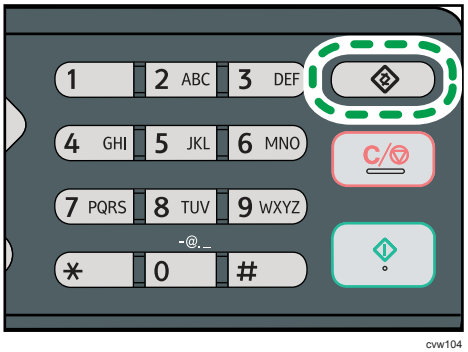

cvw104

2. **Press the [▲] or [▼] key to select [Print List/Report], and then press the [OK] key.**
3. **Press the [▲] or [▼] key to select [Configuration Page], and then press the [OK] key.**
4. **Press [Yes] in the confirmation screen.**

Types of Lists/Reports

Note

- Reports will be printed on A4 or Letter size paper. Load one of these sizes of paper into the tray before printing reports.

Configuration Page

Prints general information and the current configurations of the machine.

Fax Journal

Prints a fax transmission and reception journal for the last 50 jobs.

TX Standby File List

Prints a list of fax jobs remaining in the machine's memory to be printed, sent, or forwarded.

Quick Dial Dest. List

Prints a list of scan and fax Quick Dial entries.

Fax Speed Dial Dest. List

Prints a list of Speed Dial entries.

- Sort by Speed Dial No.

Prints the list with the entries sorted by Speed Dial registration number.

- Sort by Name

  Prints the list with the entries sorted by name.

Scanner Dest. List

Prints a list of scan destinations.

Scanner Journal

Prints a scanner journal for the last 100 Scan to E-mail, Scan to FTP, and Scan to Folder transmissions.

Maintenance Page

Prints the maintenance page.

Printer Features Settings

List/Test Print

Prints lists showing configurations on the machine.

The lists will be printed on A4 or Letter size paper.

- Config. Page

  Prints general information and the current configurations of the machine.

- Menu List

  Prints the machine's function menus.

- Test Page

  Prints a test page for checking the single-sided printing condition. The test page contains network settings.

- PCL Font List

  Prints installed PCL font list.

- Duplex Test Page

  Prints a test page for checking the duplex printing condition.

System

- Copies

  Sets the machine to print the specified number of sets.

  This setting is disabled if the number of pages to print is specified by the printer driver.

  Default: **1**

  - 1 to 999

- Sub Paper Size

  Sets the machine to print onto paper of another size if the specified paper is not loaded in any tray. Alternative sizes are preset to A4 and Letter.

  Default: [Off]

  - Auto
  - Off

- Default Page Size

  Specifies the paper size to be used when the paper size is not specified in the print job.

  Default: Region A [A4], Region B [8 1/2 × 11]

  - A4, B5 JIS, A5, B6 JIS, A6, 8 1/2 × 14, 8 1/2 × 11, 5 1/2 × 8 1/2, 7 1/4 × 10 1/2, 8 × 13, 8 1/2 × 13, 8 1/4 × 13, 16K, 4 1/8 × 9 1/2, 3 7/8 × 7 1/2, C5 Env, C6 Env, DL Env

- Duplex

  Sets the machine to print on both sides of paper according to the specified binding method.

  Default: [None]

  - None
  - Long Edge Bind
  - Short Edge Bind
- Blank Page Print

  Sets the machine to print blank pages.

  When cover sheet printing is enabled from the printer driver, cover sheets are inserted even if you select [Off].

  Note that this setting has lower priority than the printer driver's blank page setting.

  Default: [On]

  - On
  - Off
- Print Error Report

  Sets the machine to print an error page when the machine detects a printer or memory error.

  Default: [Off]

  - On
  - Off

PCL Menu

Specifies conditions when using PCL for printing.

- Orientation

  Specifies the page orientation.

  Default: [Portrait]

  - Portrait
  - Landscape
- Form Lines

  Specifies the number of lines per page.

  Default: Region A 64, Region B 60

  - 5 to 128
- Font Number

  Specifies the ID of the default font you want to use.

  Default: 0

  - 0 to 89
- Point Size

  Specifies the point size for the default font.

  This setting is effective only for a variable-space font.

  Default: 12.00 points

  - 4.00 to 999.75 (you can use the [▲] or [▼] key to change the value in 0.25 increments)
- Font Pitch

  Specifies the number of characters per inch for the default font.

  This setting is effective only for fixed-space fonts.

  Default: 10.00 pitch

  - 0.44 to 99.99
- Symbol Set

  Specifies the character set for the default font. The following sets are available:

  Default: [PC-8]

  - Roman-8, Roman-9, ISO L1, ISO L2, ISO L5, PC-8, PC-8 D/N, PC-850, PC-852, PC-858, PC8-TK, Win L1, Win L2, Win L5, Desktop, PS Text, VN Intl, VN US, MS Publ, Math-8, PS Math, VN Math, Pifont, Legal, ISO 4, ISO 6, ISO 11, ISO 15, ISO 17, ISO 21, ISO 60, ISO 69, Win 3.0, MC Text, ISO L6, ISO L9, PC-775, PC-1004, Win Baltic
- Courier Font

  Specifies a courier-type font.

  Default: [Regular]

  - Regular
  - Dark
- Ext. A4 Width

  Sets the machine to extend the width of the printable area of A4 size paper, reducing side margin width.

  Default: [Off]

  - On
  - Off
- Append CR to LF

  Sets the machine to append a CR code to each LF code to print text data clearly.

  Default: [Off]

  - On

    - Off
- Resolution

  Specifies the print resolution in dots per inch.

  Default: [600 × 600 dpi]

    - 600 × 600 dpi

Network Settings

Important

- **Depending on the settings you change, the machine might need to be restarted.**
- **Depending on the model you are using, some items might not appear.**

Ethernet

- MAC Address

  Displays the machine's MAC address.

- Ethernet Speed

  Displays the current Ethernet speed setting.

  - 100Mbps Full Duplex
  - 100Mbps Half Duplex
  - 10Mbps Full Duplex
  - 10Mbps Half Duplex
  - Ethernet Unavailable

    Appears when a network cable is not connected.

- Set Ethernet Speed

  Specifies the speed for Ethernet communication. Select a speed that matches your network environment.

  For most networks, the default setting is the optimum setting.

  Default: [Auto Select]

  - Auto Select
  - 100Mbps Full Duplex
  - 100Mbps Half Duplex
  - 10Mbps Full Duplex
  - 10Mbps Half Duplex

Wi-Fi (Type 2 model only)

- Wi-Fi Enable

  Select whether to enable or disable Wireless LAN.

  Default: [Enable]

  - Disable
  - Enable

  If [Disable] is set, [Wi-Fi Status], [MAC Address], [Current Connection], [Setup Wizard], and [WPS] are not displayed.

- Wi-Fi Status

  Displays the current connection status.

- MAC Address

  Displays the machine's MAC address.

- Current Connection

  Displays detailed information about the connection, such as the SSID and the wireless signal strength.

- Setup Wizard

  Displays the procedure for manually connecting to a wireless LAN. It leads you step-by-step through configuring the settings for connecting with a wireless LAN.

- WPS

  Connects with one touch using WPS (Wi-Fi Protected Setup). For details, see Wi-Fi Settings Guide.

IPv4 Configuration

- DHCP

  Sets the machine to receive its IPv4 address, subnet mask, and default gateway address automatically from a DHCP server.

  Default: [Inactive]

  - Inactive
  - Active

- IP Address

  Specifies the machine's IPv4 address when DHCP is not used.

  Use this menu to check the current IP address when DHCP is used.

  Default: XXX.XXX.XXX.XXX

  The numbers represented by "X" vary according to your network environment.

- Subnet Mask

  Specifies the machine's subnet mask when DHCP is not used.

  Use this menu to check the current subnet mask when DHCP is used.

  Default: XXX.XXX.XXX.XXX

  The numbers represented by "X" vary according to your network environment.

- Gateway Address

  Specifies the machine's default gateway address when DHCP is not used.

  Use this menu to check the current default gateway address when DHCP is used.

  Default: XXX.XXX.XXX.XXX

The numbers represented by "X" vary according to your network environment.

- IP Address Method

  Displays the IP address acquisition method.

  - IP Not Ready
  - DHCP
  - Manual Config.
  - Default IP

IPv6 Configuration

- IPv6

  Select whether to enable or disable IPv6.

  Default: [Active]

  - Active
  - Inactive

- DHCP

  Sets the machine to receive its IPv6 address from a DHCP server.

  Default: [Inactive]

  - Active
  - Inactive

- IP Address (DHCP)

  Displays the IPv6 address obtained from a DHCP server.

- Manual Config. Address

  - Manual Config. Address

    Specifies the machine's IPv6 address when DHCP is not used. Can contain up to 46 characters.

    For details about entering characters, see page 101 "Entering Characters".

  - Prefix Length

    Specifies the prefix length, using a value between 0 and 128.

  - Gateway Address

    Specifies the IPv6 address of the default gateway. Can contain up to 46 characters.

    For details about entering characters, see page 101 "Entering Characters".

- Stateless Address

  Displays the IPv6 stateless addresses obtained from a Router Advertisement.

  - Stateless Address 1

- Stateless Address 2
- Stateless Address 3
- Stateless Address 4

- Link-local Address

  Displays the IPv6 link local address.

Note

- Contact your network administrator for information about the network configuration.

Wireless LAN Setup (Type 2 model only)

This section describes how to configure the wireless LAN settings manually using the control panel. For easy setup using WPS (Wi-Fi Protected Setup), see Wi-Fi Settings Guide.

Important

- **If [Disable] is specified for the [Wi-Fi Enable] setting, you cannot use the [Setup Wizard]. Specify [Enable] for the [Wi-Fi Enable] setting first. If you change the [Wi-Fi Enable] setting, the machine must be restarted.**
- **Ensure that the router, access point, or device equipped with a wireless LAN, etc., is turned on.**
- **Also, check the authentication method and the name of the router, access point, or device equipped with a wireless LAN (SSID/IBSS) in advance.**

Infrastructure mode

Use the following procedure to connect to the wireless LAN router or access point manually.

1. **Press the [User Tools] key.**
2. **Press the [▼] or [▲] key to select [Network Settings], and then press the [OK] key.**

   If you are requested to enter a password, enter the password using the number keys, and then press the [OK] key.
3. **Press the [▼] or [▲] key to select [Wi-Fi], and then press the [OK] key.**
4. **Press the [▼] or [▲] key to select [Setup Wizard], and then press the [OK] key.**
5. **Press the [▼] or [▲] key to select [Infrastructure], and then press the [Next] key.**
6. **Press the [▼] or [▲] key to select the destination SSID, and then press the [Next] key.**

   If you cannot find the destination SSID, check that the device is turned on.

   When entering the SSID, select [SSID], and then press the [Next] key.

   The SSID entry screen appears. Enter the SSID using the number keys, and then press the [Next] key.

7. **Press the [▼] or [▲] key to select the authentication method, and then press the [Next] key.**

   Select the same method that the router or access point is using.

8. **Press the [▼] or [▲] key to select the encryption method, and then press the [Next] key.**

   Select the same method that the router or access point is using.

9. **Enter the encryption key and ID using the number keys, and then press the [Connect] key.**

   Note

   - The ID is used for identifying the encryption key. You can register four encryption keys (ID 1 to 4).

10. **Press [Yes] key.**

    Wait for a while. If "Connected" appears, the setting is completed.

Ad Hoc mode

This section explains the procedure for connecting directly to devices equipped with a wireless LAN, such as a notebook computer (peer-to-peer).

Important

- In Ad Hoc network, every device must be manually assigned an IP address for TCP/IP if there is no DHCP server.
- In Ad Hoc mode, only Open System or WEP encryption is supported. WPA2-PSK authentication is not supported.

1. **Press the [User Tools] key.**
2. **Press the [▼] or [▲] key to select [Network Settings], and then press the [OK] key.**

   If you are requested to enter a password, enter the password using the number keys, and then press the [OK] key.

3. **Press the [▼] or [▲] key to select [Wi-Fi], and then press the [OK] key.**
4. **Press the [▼] or [▲] key to select [Setup Wizard], and then press the [OK] key.**
5. **Press the [▼] or [▲] key to select [Ad-Hoc], and then press the [Next] key.**
6. **Press the [▼] or [▲] key to select a communication channel, and then press the [Next] key.**

   Select a channel that corresponds to the device that you are going to connect with.

7. **Press the [▼] or [▲] key to select the destination device name (IBSS), and then press the [Next] key.**

   If you cannot find the destination, check that the device is turned on.

   When entering the device name, select [SSID], and then press the [Next] key. The SSID entry screen appears. Enter the device name using the number keys, and then press the [Next] key.

8. **Press the [▼] or [▲] key to select [Open system], and then press the [Next] key.**
9. **Press the [▼] or [▲] key to select [None] or one of the WEP settings, and then press the [Next] key.**
10. **Enter the encryption key and ID using the number keys, and then press the [Connect] key.**

    Note

    - The ID is used for identifying the encryption key. You can register four encryption keys (ID 1 to 4).
11. **Press [Yes] key.**

    Wait for a while. If “"Connected"” appears, the settings are complete.

IPv6 Automatic Settings

This section explains how to set the machine to receive an IPv6 address automatically.

Important

- A router with DHCP function or a DHCP server is required.

1. **Connect the printer to the router or the hub using the Ethernet cable.**
2. **Turn on the machine.**
3. **Press the [User Tools] key.**
4. **Press the [▼] or [▲] key to select [Network Settings], and then press the [OK] key.**
5. **Press the [▼] or [▲] key to select [IPv6 Configuration], and then press the [OK] key.**
6. **Press the [▼] or [▲] key to select [DHCP], and then press the [OK] key.**
7. **Press the [▼] or [▲] key to select [Active], and then press the [OK] key.**
8. **Press the [User Tools] key to return to the initial screen.**
9. **If you are requested to restart the machine, turn off the machine, and then turn it back on.**

IPv6 Manual Settings

This section explains how to assign the machine's IPv6 address manually.

1. **Connect the printer to the router or the hub using the Ethernet cable.**
2. **Turn on the machine.**
3. **Press the [User Tools] key.**
4. **Press the [▼] or [▲] key to select [Network Settings], and then press the [OK] key.**
5. **Press the [▼] or [▲] key to select [IPv6 Configuration], and then press the [OK] key.**
6. **Press the [▼] or [▲] key to select [DHCP], and then press the [OK] key.**

7. Press the [▼] or [▲] key to select [Inactive], and then press the [OK] key.
8. Press the [▼] or [▲] key to select [Manual Config. Address], and then press the [OK] key.
9. Press the [▼] or [▲] key to select [Manual Config. Address], and then press the [OK] key.
10. Enter the machine's IPv6 address using the number keys, and then press the [OK] key.
11. Press the [▼] or [▲] key to select [Prefix Length], and then press the [OK] key.
12. Enter the prefix length using the number keys, and then press the [OK] key.
13. Press the [▼] or [▲] key to select [Gateway Address], and then press the [OK] key.
14. Enter the gateway address using the number keys, and then press the [OK] key.
15. Press the [User Tools] key to return to the initial screen.
16. If you are requested to restart the machine, turn off the machine, and then turn it back on.

Administrator Settings

Set Date/Time

Sets the date and time of the machine's internal clock.

- Set Date

  Specifies the date of the machine's internal clock.

  Only dates that correspond with the year and month can be set. Incompatible dates will be refused.

  Default date format: Region A [Day/Month/Year], Region B [Year/Month/Day]

  - Date format: Month/Day/Year, Day/Month/Year, or Year/Month/Day

    Year: 2000 to 2099

    Month: 1 to 12

    Day: 1 to 31

- Set Time

  Sets the time of the machine's internal clock.

  Default time format: Region A [24-hour Format], Region B [12-hour Format]

  - Time format: 12-hour Format, 24-hour Format

    AM/PM stamp: AM, PM (for 12-hour Format)

    Hour: 0 to 23 (for 24-hour Format), or 1 to 12 (for 12-hour Format)

    Minute: 0 to 59

Program Fax Information

Specifies the fax name and fax number of the machine.

- Number:

  Specifies the fax number of the machine using up to 20 characters, including 0 to 9, space, and "+".

- Name:

  Specifies the fax name of the machine using up to 20 alphanumeric characters and symbols.

Dial/Push Phone

Specifies the line type of the telephone line.

To configure this setting, contact your telephone company and select the setting based on your telephone line. Selecting a wrong setting may cause failures in fax transmissions.

[Dial Phone (20PPS)] may not appear depending on the country setting of the machine.

Default: [Push Phone]

- Push Phone

- Dial Phone (10PPS)
- Dial Phone (20PPS)

PSTN / PBX

Sets the machine to connect to the public switched telephone network (PSTN) or a private branch exchange (PBX).

Default: [PSTN]

- PSTN
- PBX

PBX Access Number

Specifies the dial number to access the outside line when the machine is connected to a PBX.

Make sure that this setting matches the setting of your PBX. Otherwise, you may not be able to send faxes to outside destinations.

Default: 0

- 0 to 999

Function Priority

Specifies the mode that is activated when the power is turned on, or if the time specified for [System Auto Reset Timer] elapses without activity while the initial screen of the current mode is displayed.

Default: [Copier]

- Copier
- Facsimile
- Scanner

System Auto Reset Timer

Sets the machine to return to the mode specified in [Function Priority].

Default: [On] (30 seconds)

- On (30 sec., 1 min., 2 min., 3 min., 5 min., 10 min.)
- Off

Energy Saver Mode

Sets the machine to enter Energy Saver mode, Energy Saver mode 1 or Energy Saver mode 2, to reduce power consumption. The machine recovers from Energy Saver mode when it receives a print job, prints a received fax, or when the [Copy] or [Start] key is pressed.

- EnergySaverMode 1

  The machine enters Energy Saver mode 1 if the machine has been idle for about 30 seconds. It takes less time to recover from Energy Saver mode 1 than from power-off state or Energy Saver mode 2, but power consumption is higher in Energy Saver mode 1 than in Energy Saver mode 2.

Default: [Off]

- Off
- On (30 seconds)

- EnergySaverMode 2

  The machine enters Energy Saver mode 2 after the period of time specified for this setting is passed. The machine consumes less power in Energy Saver mode 2 than in Energy Saver mode 1, but it takes longer to recover from Energy Saver mode 2 than from Energy Saver mode 1.

  Default: [On] (1 minute)

  - On (1 to 240 minutes)
  - Off

Language

Specifies the language used on the screen and in reports.

The default value for this setting is the language you have specified during the Initial Setup, which is required after turning on the machine for the first time.

Country

Selects the country in which the machine is used. The country code you specify determines the time and date display format and the default values of the fax transmission-related settings.

Make sure to select the country code correctly. Selecting a wrong country code may cause failures in fax transmissions.

The default value for this setting is the country code you have specified during the Initial Setup, which is required after turning on the machine for the first time.

Reset Settings

Be sure not to clear the settings by mistake.

- Reset All Settings

  Resets the machine's settings to their defaults except the following:

  - Network settings
  - Fax destinations
  - [Printer Registration], [Low Humidity Mode], and [Image Density] settings under system settings
  - Scan destinations (configured using Web Image Monitor)
  - User restriction settings (configured using Web Image Monitor)
  - IPsec settings (configured using Web Image Monitor)

  Press [Yes] to execute. Press [No] to exit to the previous level of the menu tree without clearing the settings.

- Reset Network Settings

  Resets the network settings to their defaults.

  Press [Yes] to execute. Press [No] to exit to the previous level of the menu tree without clearing the settings.

- Clear Address Book

  Clears the fax Quick Dial/Speed Dial destinations.

  Press [Yes] to execute. Press [No] to exit to the previous level of the menu tree without clearing the destinations.

Admin. Tools Lock

Specifies a four-digit password for accessing the [Address Book], [Network Settings], and [Admin. Tools] menus.

Do not forget this password.

- On (0000 to 9999)
- Off

IPsec

Selects whether to enable or disable IPsec.

This function appears only when a password is specified under [Admin. Tools Lock].

Default: [Inactive]

- Active
- Inactive

Fax Number Confirmation

Sets the machine to require a fax number to be entered twice when specifying a destination manually.

When this function is enabled, you cannot use the On Hook Dial function.

This function appears only when a password is specified under [Admin. Tools Lock].

Default: [Off]

- On
- Off

Shrtct to Func.

Assigns one of the following functions to the [Shortcut to Func.] key on the control panel.

Default: [ID Card Copy Mode]

- ID Card Copy Mode
- Fax Immediate TX
- Select Scanner Dest.

- Dup/Comb Copy

8. Configuring the Machine Using Utilities

Using Web Image Monitor

Note

- To operate the machine via Web Image Monitor, you must first configure the machine's TCP/IP or wireless LAN settings. For details, see page 159 "Network Settings".

Important

- **Some items might not appear, depending on the model type you are using.**
- **Some items can also be configured using the control panel.**

Available operations

The following operations can be performed remotely using Web Image Monitor on a computer:

- Displaying the machine's status or settings
- Configuring the machine's settings
- Registering the scan and fax destinations
- Configuring the network settings
- Configuring the IPsec settings
- Printing reports
- Setting the administrator password and e-mail address
- Resetting the machine's configuration to the factory default
- Creating backup files of the machine's configuration
- Restoring the machine's configuration from backup files
- Configuring the machine's date and time
- Configuring the machine's Energy Saver mode setting

Supported Web browsers

- Internet Explorer 6 or later
- Firefox 3.0 or later
- Safari 3.0 or later

Displaying Top Page

When you access the machine using Web Image Monitor, the top page appears in your browser's window.

1. **Launch the Web browser.**
2. **In the Web browser's address bar, enter "http://(machine's IP address)/" to access the machine.**

   If a DNS or WINS server is used and the machine's host name has been specified, you can enter the host name instead of the IP address.

   The top page of Web Image Monitor appears.

Top page

Every Web Image Monitor page is divided into the following areas:

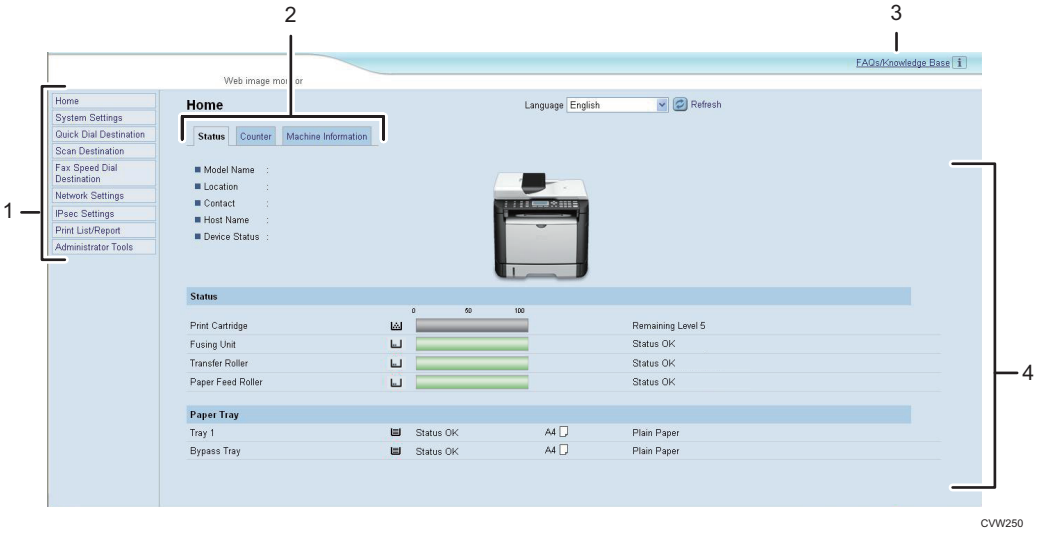

1. Menu area

   Clicking a menu shows its contents in the main area.

2. Tab area

   Contains tabs for switching between information and settings you want to see or configure.

3. FAQs/Knowledge Base

   Provides answers to frequently asked questions and other useful information about using this machine.

   An internet connection is required to view this information.

4. Main area

   Displays the contents of the item selected in the menu area.

Information in the main area is not automatically updated. Click [Refresh] at the upper-right in the main area to update the information. Click the Web browser's [Refresh] button to refresh the entire browser screen.

Note

- If you use an older version of a supported Web browser or the Web browser has JavaScript and cookies disabled, display and operation problems may occur.
- If you are using a proxy server, configure the Web browser settings as necessary. For details about the settings, contact your network administrator.
- The previous page may not appear even if the back button of the Web browser is clicked. If this happens, click the refresh button of the Web browser.
- The FAQs (Frequently Asked Questions)/Knowledge Base are not available in certain languages.

Changing the Interface Language

Select the desired interface language from the [Language] list.

Checking the System Information

Click [Home] to display the main page of Web Image Monitor. You can check the current system information on this page.

This page contains three tabs: [Status], [Counter], and [Machine Information].

Status Tab

Item	Description
Model Name	Shows the name of the machine.
Location	Shows the location of the machine as registered on the [SNMP] page.
Contact	Shows the contact information of the machine as registered on the [SNMP] page.
Host Name	Shows the host name specified in [Host Name] on the [DNS] page.
Device Status	Shows the current messages on the machine's display.

Status

Item	Description
Print Cartridge	Shows the amount of toner remaining.
Fusing Unit	Shows the remaining life of the fusing unit, as "Status OK", "Replacement Required Soon" or "Replacement Required". For replacing, contact your sales or service representative.
Transfer Roller	Shows the remaining life of the transfer roller, as "Status OK", "Replacement Required Soon" or "Replacement Required". For replacing, contact your sales or service representative.
Paper Feed Roller	Shows the remaining life of the paper feed roller, as "Status OK", "Replacement Required Soon" or "Replacement Required". For replacing, contact your sales or service representative.

Paper Tray

Item	Description
Tray 1	Shows the current state and paper size/type setting of tray 1.

Item	Description
Bypass Tray	Shows the current state and paper size/type setting of the bypass tray.

Note

- If a non-genuine print cartridge is installed, toner life cannot be reliably indicated.

Counter Tab

Page Counter

Item	Description
Printer	Shows the following for pages printed using the printer function: • Total number of pages printed using the printer function, and lists/reports printed from the [List/Test Print] menu under [Printer Features] • Number of color pages (always shows 0) • Number of black-and-white pages printed using the printer function
Scanner	Shows the following for pages scanned using the scanner function: • Total number of pages • Number of color pages • Number of black-and-white pages
Copier	Shows the following for pages printed using the copier function: • Total number of pages • Number of color pages (always shows 0) • Number of black-and-white pages
Fax	Shows the following for public telephone line faxes: • Total number of pages sent and received • Number of pages sent • Number of pages received

Print Counter

Item	Description
Page Total	Shows the total number of all prints from the machine: • Pages printed using the printer, copy, and fax functions • Lists/Reports printed from the [Print List/Report] menu • Lists/Reports printed from the [List/Test Print] menu under [Printer Features]

Duplex

Item	Description
Duplex Total Page	Shows the total number of sheets printed on both sides.

Machine Information Tab

Machine Information

Item	Description
Firmware Version	Shows the version of firmware installed on the machine.
Engine FW Version	Shows the version of firmware for the machine engine.
Machine ID	Shows the identification number of the machine.
Fax Card	Shows that a fax card is installed.
Total Memory	Shows the total memory installed on the machine.

Configuring the System Settings

Click [System Settings] to display the page for configuring the system settings.

This page contains the following tabs: [Sound Volume Adjustment], [Tray Paper Settings], [Copier], [Fax], [Priority Tray], [Toner Saving], [I/O Timeout], and [Shortcut to Function].

Sound Volume Adjustment Tab

Sound Volume Adjustment

Item	Description
Panel Key Sound	Select the volume of the beep that sounds when a key is pressed from [Off], [Low], [Middle], or [High].
On Hook Mode	Select the volume of the sound from the speaker during on hook mode from [Off], [Low], [Middle], or [High].
Job End Tone	Select the volume of the beep that sounds when a job is complete from [Off], [Low], [Middle], or [High].
Job Error Tone	Select the volume of the beep that sounds when a fax transmission error occurs from [Off], [Low], [Middle], or [High].
Alarm Volume	Select the volume of the alarm that sounds when an operation error occurs from [Off], [Low], [Middle], or [High].

Tray Paper Settings Tab

Tray 1

Item	Description
Paper Size	Select the paper size for tray 1 from the following: A4, B5 JIS, A5, B6 JIS, A6, 8 1/2 × 14, 8 1/2 × 11, 5 1/2 × 8 1/2, 7 1/4 × 10 1/2, 8 × 13, 8 1/2 × 13, 8 1/4 × 13, 16K, Custom Size
Paper Type	Select the paper type for tray 1 from the following: Thin Paper (52 to 64g/m2), Thick Paper 1 (100 to 130g/m2), Thick Paper 2 (131 to 162g/m2), Plain Paper, Recycled Paper, Color Paper, Preprinted Paper, Prepunched Paper, Letterhead, Bond Paper, Cardstock, Label Paper

Bypass Tray

Item	Description
Paper Size	Select the paper size for the bypass tray from the following: A4, B5 JIS, A5, B6 JIS, A6, 8 1/2 × 14, 8 1/2 × 11, 5 1/2 × 8 1/2, 7 1/4 × 10 1/2, 16K, 4 1/8 × 9 1/2, 3 7/8 × 7 1/2, C5 Env, C6 Env, DL Env, Custom Size
Paper Type	Select the paper type for the bypass tray from the following: Thin Paper (52 to 64g/m2), Thick Paper 1 (100 to 130g/m2), Thick Paper 2 (131 to 162g/m2), Plain Paper, Recycled Paper, Color Paper, Preprinted Paper, Prepunched Paper, Letterhead, Bond Paper, Cardstock, Label Paper, Envelope, OHP

Bypass Tray Setting Priority

Item	Description
Bypass Tray Setting Priority	Select how print jobs using the bypass tray are handled. • System Settings The machine prints all print jobs according to the machine's settings. An error will occur if the paper size/type settings of the machine and printer driver do not match. • Any Size/Type The machine prints all print jobs according to the printer driver's settings. Printing proceeds even if the paper size/type settings of the machine and printer driver do not match, but if the paper is too small for the print job, the printed image will be cropped. • Any Custom Size/Type The machine prints custom size print jobs according to the printer driver's settings and prints standard size print jobs according to the machine's settings. For custom size print jobs, printing proceeds even if the paper size/type settings of the machine and printer driver do not match, but if the paper is too small for the print job, the printed image will be cropped. For standard size print jobs, an error will occur if the paper size/type settings of the machine and printer driver do not match.
Size Mismatch Detection	Select whether to set the machine to report an error if the paper size does not match the print job's settings.

Copier Tab

Select Paper

Item	Description
Select Paper	Select the paper size used for printing copies from the following: [Tray 1], [Bypass Tray], [A4], [8 1/2 × 11], or [16K]. When a tray is selected, the machine prints from that tray only. When a paper size is selected, the machine checks the trays for the paper of the specified size in the order of priority as set in [Copier] in the [Priority Tray] page. If multiple trays contain valid paper, the first tray the machine finds will be used for printing; when that tray runs out of paper, the machine automatically switches to the next tray to continue printing.
Separation Line	Specify whether to print a line in the middle of the printed paper when making ID card copy or combined copy.

Fax Tab

Fax Number Confirmation

Item	Description
Fax Number Confirmation	Enable this setting to configure the machine to require a fax number to be entered twice when specifying a destination manually. This setting appears only when the administrator password is set in the [Administrator] page.
2 Sided Print	Specify whether to print received faxes on both sides of paper.

Priority Tray Tab

Priority Tray

Item	Description
Printer	Select the tray that the machine checks first for paper that can be used for the job from [Tray 1] or [Bypass Tray]. If automatic tray selection is specified for the print job and multiple trays contain valid paper, the first tray the machine finds will be used for printing; when that tray runs out of paper, the machine automatically switches to the next tray to continue printing.
Copier	Select the tray that the machine checks first for paper that can be used for the job from [Tray 1] or [Bypass Tray]. If [A4], [8 1/2 × 11], or [16K] is selected for [Select Paper] in the [Copier] page and multiple trays contain valid paper, the first tray the machine finds will be used for printing; when that tray runs out of paper, the machine automatically switches to the next tray to continue printing.

Toner Management Tab

Toner Management

Item	Description
Toner Saving	Enable this setting to print using a reduced amount of toner when printing out copies.

I/O Timeout Tab

I/O Timeout

Item	Description
Fixed USB Port	Specifies whether the same printer/LAN-Fax driver can be used for multiple machines or not under USB connection. If this setting is enabled, the same printer/LAN-Fax driver you have installed in your computer can be used with any machine other than the one originally used for installation, if the machine is of the same model. If disabled, you must install the printer/LAN-Fax driver separately for individual machines, because the machine other than the original will be recognized as a new device upon USB connection.

Shortcut to Function Tab

Shortcut to Function

Item	Description
Shortcut to Function Settings	Assigns one of the following functions to the [Shortcut to Func.] key on the control panel. • [ID Card Copy Mode] • [Fax Immediate TX] • [Select Scanner Destination] • [Duplex/Combine Copy]

Registering Destinations

Scan and fax destinations can be registered using Web Image Monitor.

A maximum of 100 scan destinations and 208 fax destinations (8 Quick Dial and 200 Speed Dial destinations) can be registered. See the scan and fax sections for more information on registering destinations.

For details about registering scan destinations, see page 82 "Registering Scan Destinations".

For details about registering fax destinations using Web Image Monitor, see page 103 "Registering Fax Destinations".

Configuring the Network Settings

Click [Network Settings] to display the page for configuring the network settings.

This page contains the following tabs: [Network Status], [IPv6 Configuration], [Network Application], [DNS], [Auto E-mail Notification], [SNMP], [SMTP], [POP3], and [Wireless] (Type 2 model only).

Important

- **Depending on the settings you change, the machine might need to be restarted.**
- **Depending on the model you are using, some items might not appear.**

Network Status Tab

General Status

Item	Description
Ethernet Speed	Shows the type and speed of the network connection.
IPP Printer Name	Shows the name used to identify the machine on the network.
Network Version	Shows the version of the machine's network module (a part of the machine firmware).
Ethernet MAC Address	Shows the Ethernet MAC address of the machine.
Active Interface	Shows the active communication method.

TCP/IP Status

Item	Description
DHCP	Select whether the machine should receive a dynamic IPv4 address automatically using DHCP. To use DHCP, select [Active]. When enabled, the items below cannot be configured.
IP Address	Enter the IPv4 address for the machine.
Subnet Mask	Enter the subnet mask of the network.
Gateway	Enter the IPv4 address of the network gateway.

IPv6 Configuration Tab

IPv6

Item	Description
IPv6	Select whether to enable or disable IPv6. You cannot disable IPv6 using Web Image Monitor if the machine is currently in use in an IPv6 environment. In this case, use the control panel to disable [IPv6] under network settings. When disabled, [DHCP], [Manual Configuration Address], [Prefix Length], and [Gateway Address] below cannot be configured.

IPv6 Address

Item	Description
DHCP	Select whether or not the machine obtains its IPv6 address from a DHCP server.
IP Address (DHCP)	Displays the IPv6 address obtained from the DHCP server when [DHCP] is set to [Active].
Stateless Address	Displays up to four stateless auto addresses.
Gateway Address	Displays the machine's default gateway address.
Link-local Address	Displays the link local address of the machine. The link local address is an address that is valid only inside the local network (local segment).
Manual Configuration Address	Enter the machine's IPv6 address. Can contain up to 39 characters.
Prefix Length	Enter the prefix length, using a value between 0 and 128.
Gateway Address	Enter the default gateway's IPv6 address. Can contain up to 39 characters.

Network Application Tab

Scanner Send Setting

Item	Description
E-mail	Select to enable the Scan to E-mail feature.

Item	Description
Max. E-mail Size	Select the maximum size of scan files that can be attached to an e-mail message (1 to 5 MB, or no limit).
FTP	Select to enable the Scan to FTP feature.
Folder	Select to enable the Scan to Folder feature.

Network Print Setting

Item	Description
IPP	Select to enable network printing using Internet Print Protocol (via TCP port 631/80).
FTP	Select to enable network printing using an embedded FTP server in the machine (via TCP port 20/21).
RAW	Select to enable network raw printing.
Port No.	Enter the TCP port number to use for raw printing. The valid range is 1024 to 65535, except 53550 and 49999 (default is 9100).
LPR	Select to enable network printing using LPR/LPD (via TCP port 515).

mDNS Setting

Item	Description
mDNS	Select to enable Multicast DNS (via UDP port 5353). If disabled, the item below cannot be configured.
Printer Name	Enter the name of the machine. Can contain up to 32 characters.

DNS Tab

DNS

Item	Description
DNS Method	Select whether to specify domain name servers manually or receive DNS information from the network automatically. When set to [Auto], [Primary DNS Server], [Secondary DNS Server], and [Domain Name] below become unavailable.
Primary DNS Server	Enter the IPv4 address of the primary DNS.

Item	Description
Secondary DNS Server	Enter the IPv4 address of the secondary DNS.
Domain Name	Enter the IPv4 domain name for the machine. Can contain up to 32 characters.
IPv6 DNS Method	Select whether to specify the domain server manually or have the machine obtain its DNS information automatically. When set to [Auto], [Primary IPv6 DNS Server], [Secondary IPv6 DNS Server], and [IPv6 Domain Name] below become unavailable.
Primary IPv6 DNS Server	Enter the IPv6 address of the primary IPv6 DNS server. Can contain up to 39 characters.
Secondary IPv6 DNS Server	Enter the IPv6 address of the secondary IPv6 DNS server. Can contain up to 39 characters.
IPv6 Domain Name	Enter the IPv6 domain name of the machine. Can contain up to 32 characters.
DNS Resolve Priority	Select whether to give priority to IPv4 or IPv6 for DNS name resolution.
DNS Timeout (seconds)	Enter the number of seconds the machine waits before considering a DNS request to have timed out (1 to 999 seconds).
Host Name	Enter a host name for the machine. Can contain up to 15 characters.

Auto E-mail Notification Tab

E-mail Notification 1/E-mail Notification 2

Item	Description
Display Name	Enter a sender name for notification e-mail. Can contain up to 32 characters.
E-mail Address	Enter the address of the recipient of the alert email. Can contain up to 64 characters.
Paper Misfeed	Select to send an alert e-mail to the specified address if a paper jam occurs.
Out of Paper	Select to send an alert e-mail to the specified address if paper runs out.
Replace Print Cartridge Soon	Select to send an alert e-mail to the specified address if toner becomes low.

Item	Description
Call Service	Select to send an alert e-mail to the specified address if the machine requires servicing.
Replace Print Cartridge	Select to send an alert e-mail to the specified address if toner runs out.
Cover Open	Select to send an alert e-mail to the specified address if a cover is open.

SNMP Tab

SNMP

Item	Description
SNMP	Select whether to enable the machine to use SNMP services.

Trap

Item	Description
Target Trap	Select whether to enable the machine to send traps to the management host (NMS). When disabled, [SNMP Management Host 1] and [SNMP Management Host 2] below become unavailable.
SNMP Management Host 1	Enter the IP address or host name of a management host. Can contain up to 64 characters.
SNMP Management Host 2	Enter the IP address or host name of a management host. Can contain up to 64 characters.

Community

Item	Description
Get Community	Enter the community name to use for authentication of Get requests. Can contain up to 32 characters.
Trap Community	Enter the community name to use for authentication of Trap requests. Can contain up to 32 characters.

System

Item	Description
Location	Enter the location of the machine. The location entered here is displayed on the main page. Can contain up to 64 characters.
Contact	Enter the contact information of the machine. The contact information entered here is displayed on the main page. Can contain up to 64 characters.

SMTP Tab

SMTP

Item	Description
Primary SMTP Server	Enter the IP address or host name of the SMTP/POP3 server. Can contain up to 64 characters.
Port No.	Enter the port number for SMTP (1 to 65535).
Authentication Method	Select an authentication method from the following: [Anonymous]: The user name and password are not necessary. [SMTP]: The machine supports NTLM and LOGIN authentication. [POP before SMTP]: The POP3 server is used for authentication. When sending e-mails to an SMTP server, you can enhance the SMTP server security level by connecting to the POP server for authentication.
User Name	Enter the user name for logging in to the SMTP server. Can contain up to 32 characters.
Password	Enter the password for logging in to the SMTP server. Can contain up to 32 characters.
Device E-mail Address	Enter the machine’s e-mail address. This address is used as the sender's address of e-mail messages sent from this machine, such as notification e-mails. Can contain up to 64 characters.
Server Timeout (seconds)	Enter the number of seconds the machine waits before considering an SMTP operation to have timed out (1 to 999).

Item	Description
Time Zone	Select a time zone according to your geographic location. Selecting a different time zone may cause transmission date and time to be incorrect for email sent by the Scan to E-mail function, even when the machine's clock is set correctly.

POP3 Tab

POP3 Settings

Item	Description
POP3 Server	Enter the IP address or host name of the POP3 server for e-mail reception. The POP3 server specified here will be used for [POP before SMTP]. Can contain up to 64 characters.
User Account	Enter the user name for logging in to the POP3 server. Can contain up to 32 characters.
User Password	Enter the password for logging in to the POP3 server. Can contain up to 32 characters.
Authentication	Select an authentication method from the following: [None]: Password will not be encrypted. [APOP Authentication]: Password will be encrypted. [Auto]: Password will be encrypted or not encrypted according to the POP3 server's settings.

Wireless Tab (Type 2 model only)

Wireless LAN Status

Item	Description
Wireless LAN Status	Displays the status of the connection to the wireless LAN.
MAC Address	Displays the MAC address.
Communication Mode	Displays the communication mode that the machine is connecting in.
SSID	Displays the SSID of the access point that the machine is connected to.

Item	Description
Channel	Displays the channel information of the current wireless LAN settings if [Ad-Hoc] is selected for [Communication Mode].
Wireless Signal Status	Displays the strength of the wireless signal that is being received.
Wireless	Specifies whether or not to use the wireless LAN.

Wireless LAN Settings

Item	Description
SSID	Enter the SSID of the access point. The SSID can contain up to 32 characters. When you click [Scan List], a list of available access points is displayed. You can select the SSID from the list.
Communication Mode	Select the mode to connect in. If the machine will be connected to a wireless router or access point, select [Infrastructure]. If the machine will be connected to a device equipped with a wireless LAN directly, select [Ad-Hoc].
Ad-Hoc Channel	If [Ad-Hoc] is selected for [Communication Mode], select a channel.
Authentication	Select an authentication method. If [Ad-Hoc] is selected for [Communication Mode], you can select only [Open System] and [Shared Key].
Encryption	Select an encryption method. If [Ad-Hoc] is selected for [Communication Mode], you can select only [None]and [WEP].
WPA Passphrase	If [WPA2-PSK] or [Mixed Mode WPA/WPA2] is selected for [Authentication], enter the WPA encryption key.
WEP Key Length	If [WEP] is selected for [Authentication], select 64 bits or 128 bits for the length of the encryption key.
WEP Transmit Key ID	Select an ID number to identify each WEP key in case multiple WEP connections are configured.
WEP Key Format	Select a format for entering the WEP key.

Item	Description
WEP Key	Enter the WEP key. The number and type of characters you can enter vary depending on the length and format selected for the key. See the following: • WEP key length: [64bits], Format: [Hexadecimal] WEP key max length: 10 characters (0-9, A-F, a-f) • WEP key length: [64bits], Format: [ASCII] WEP key max length: 5 characters (ASCII characters) • WEP key length: [128bits], Format: [Hexadecimal] WEP key max length: 26 characters (0-9, A-F, a-f) • WEP key length: [128bits], Format: [ASCII] WEP key max length: 13 characters (ASCII characters)

Note

- If you are configuring the connection settings manually, check the SSID, authentication method, or encryption key of the access point or wireless router in advance.

One-touch connection settings (WPS)

Item	Description
Wireless Protected Setup (WPS) Method	Select a method to connect using WPS.

WiFi Protected Setup Initiation

Item	Description
WIFI Protected Setup Start	Wi-Fi setup information will be displayed.

Configuring the IPsec Settings

Click [IPsec Settings] to display the page for configuring the IPsec settings.

This page contains the following tabs: [IPsec Global Settings] and [IPsec Policy List].

Important

- **This function is available only when an administrator password is specified.**

IPsec Global Settings Tab

Item	Description
IPsec Function	Select whether to enable or disable IPsec.
Default Policy	Select whether to allow for the default IPsec policy.
Broadcast and Multicast Bypass	Select the services that you do not want to apply IPsec from the following: [DHCPv4], [DHCPv6], [SNMP], [mDNS], [NetBIOS], [UDP Port 53550]
All ICMP Bypass	Select whether to apply IPsec to ICMP packets (IPv4 and IPv6) from the following: [Active]: All ICMP packets will be bypassed without IPsec protection. "ping" command (echo request and echo reply) is not encapsulated by IPsec. [Inactive]: Some ICMP message types will be bypassed without IPsec protection.

Note

- For details about which ICMP message types will be bypassed when setting [All ICMP Bypass] to [Inactive], see Web Image Monitor Help.

IPsec Policy List Tab

Item	Description
No.	IPsec policy number.
Name	Displays the name of the IPsec policy.

Item	Description
Address Settings	Displays the IP address filter of the IPsec policy as below: Remote address/Prefix length
Action	Displays the action of the IPsec policy as "Allow", "Drop", or "Require Security".
Status	Displays the status of the IPsec policy as "Active" or "Inactive".

To configure IPsec policies, select the desired IPsec policy, and then click [Change] to open the "IPsec Policy Settings" page. The following settings can be made on the "IPsec Policy Settings" page.

IP Policy Settings

Item	Description
No.	Specify a number between 1 and 10 for the IPsec policy. The number you specify will determine the position of the policy in the IPsec Policy List. Policy searching is performed according to the order of the list. If the number you specify is already assigned to another policy, the policy you are configuring will take the number of the earlier policy, and the earlier policy and any subsequent policies will be renumbered accordingly.
Activity	Select whether to enable or disable the policy.
Name	Enter the name of the policy. Can contain up to 16 characters.
Address Type	Select IPv4 or IPv6 as the type of IP address to be used in IPsec communication.
Local Address	Displays the IP address of this printer.
Remote Address	Enter the IPv4 or IPv6 address of the device with which to communicate. Can contain up to 39 characters.
Prefix Length	Enter the prefix length of the Remote Address, using a value between 1 and 128. If this setting is left blank, "32" (IPv4) or "128" (IPv6) will be automatically selected.

Item	Description
Action	Specify how the IP packets are processed from the following: • [Allow]: IP packets are both sent and received without IPsec applied to them. • [Drop]: IP packets are discarded. • [Require Security]: IPsec is applied to IP packets that are both sent and received. If you have selected [Require Security], you must configure [IPsec Settings] and [IKE Settings].

IPsec Settings

Item	Description
Encapsulation Type	Specify the encapsulation type from the following: • [Transport]: Select this mode to secure only the payload section of each IP packet when communicating with IPsec compliant devices. • [Tunnel]: Select this mode to secure every section of each IP packet. We recommend this type for communication between security gateways (such as VPN devices).
Security Protocol	Select the security protocol from the following: • [AH]: Establishes secure communication that supports authentication only. • [ESP]: Establishes secure communication that supports both authentication and data encryption. • [ESP&AH]: Establishes secure communication that supports both data encryption and authentication of packets, including packet headers. Note that you cannot specify this protocol when [Tunnel] is selected for [Encapsulation Type].
Authentication Algorithm for AH	Specify the authentication algorithm to be applied when [AH] or [ESP&AH] is selected for [Security Protocol] from the following: [MD5], [SHA1]
Encryption Algorithm for ESP	Specify the encryption algorithm to be applied when [ESP] or [ESP&AH] is selected for [Security Protocol] from the following: [None], [DES], [3DES], [AES-128], [AES-192], [AES-256]

Item	Description
Authentication Algorithm for ESP	Specify the authentication algorithm to be applied when [ESP] is selected for [Security Protocol] from the following: [MD5], [SHA1]
Life Time	Specify the life time of the IPsec SA (Security Association) as a time period or data volume. The SA will expire when the time period you specify elapses or the volume of data you specify reaches the volume carried. If you specify both a time period and a data volume, the SA will expire as soon as either is reached, and a new SA will then be obtained by negotiation. To specify the life time of the SA as a time period, enter a number of seconds. To specify the life time of the SA as a data volume, enter a number of KBs.
Key Perfect Forward Secrecy	Select whether to enable or disable PFS (Perfect Forward Secrecy).

IKE Settings

Item	Description
IKE Version	Displays the IKE version.
Encryption Algorithm	Specify the encryption algorithm from the following: [DES], [3DES], [AES-128], [AES-192], [AES-256]
Authentication Algorithm	Specify the authentication algorithm from the following: [MD5], [SHA1]
IKE Life Time	Specify the life time of the ISAKMP SA as a time period. Enter a number of seconds.
IKE Diffie-Hellman Group	Select the IKE Diffie-Hellman Group to be used in the generation of the IKE encryption key from the following: [DH1], [DH2]
Pre-Shared Key	Specify the PSK (Pre-Shared Key) to be used for authentication of a communicating device. Can contain up to 32 characters.
Key Perfect Forward Secrecy	Select whether to enable or disable PFS (Perfect Forward Secrecy).

Printing Lists/Reports

Click [Print List/Report] to display the page for printing reports. Then, select an item and click [Print] to print out information for that item.

Print List/Report

Item	Description
Configuration Page	Prints general information about the machine and its current configuration.
Fax Journal	Prints a fax transmission and reception journal for the last 50 jobs. For details about automatic fax journal printing, see page 142 "Fax Features Settings".
Fax TX Standby File List	Prints a list of fax jobs remaining in the machine's memory to be printed, sent, or forwarded.
Quick Dial Destination List	Prints a list of Quick Dial entries.
Fax Speed Dial Destination List	Prints a list of Speed Dial entries.
Scanner Destination List	Prints a list of scan destinations.
Scanner Journal	Prints a scanner journal for the last 100 Scan to E-mail, Scan to FTP, and Scan to Folder transmissions.
Maintenance Page	Prints the maintenance page.

Note

- Reports cannot be printed via Web Image Monitor if other jobs are printing. Before printing reports, confirm that machine is not printing.
- Reports will be printed on A4 or Letter size paper. Load one of these sizes of paper into the tray before printing reports.

Configuring the Administrator Settings

Click [Administrator Tools] to display the page for configuring the administrator settings.

This page contains the following tabs: [Administrator], [Reset Settings], [Backup Setting], [Restore Setting], [Set Date/Time], and [Energy Saver Mode].

Administrator Tab

Administrator Settings

Item	Description
New Password	Enter the new administrator password. Can contain up to 16 characters.
Confirm New Password	Enter the same password again, to confirm.

Rest Settings Tab

Reset Settings

Item	Description
Reset Network Settings	Select to restore the following settings to their defaults: • Settings under [Network Settings] • Settings under the [Administrator] tab of [Administrator Tools]
Reset Menu Settings	Select to restore the settings other than the following to their defaults: • Network settings • Scan destinations • User restriction settings • Fax destinations • IPsec settings • [Printer Registration], [Low Humidity Mode], and [Image Density] settings under system settings of the control panel setting menu
Clear Scan Destination	Select to clear the scan destinations.
Clear Address Book	Select to clear the fax destinations.
Reset IPsec Settings	Select to clear the IPsec settings.

Note

- [Reset IPsec Settings] appears only when the administrator password is specified.

Backup Setting Tab

Important

- **When sending the machine for repair, it is important that you create backup files in advance. The machine's settings are returned to the default after repair.**

Backup Setting

Item	Description
Back up Network Settings	Backs up the following settings to a file: • Settings under [Network Settings] • Settings under the [Administrator] tab of [Administrator Tools] Note that, however, [Max. E-mail Size] setting under [Network Application] will not be backed up here; it will be backed up by [Back up Menu Settings] instead.
Back up Menu Settings	Backs up the settings other than the following to a file: • Network settings • Scan destinations • User restriction settings • Fax destinations • IPsec settings • [Printer Registration], [Low Humidity Mode], and [Image Density] settings under system settings of the control panel setting menu
Back up Scan Destination	Backs up scan destinations to a file.
Back up Address Book	Backs up fax destinations to a file.
Back up IPsec Settings	Backs up the IPsec settings to a file.

Follow the procedure below to create configuration backup files.

1. **Select the radio button for the type of data you wish to back up.**
2. **Enter the administrator password if required.**
3. **Click [OK].**

4. **Click [Save] in the confirmation dialog box.**
5. **Navigate to the location to save the backup file.**
6. **Specify a name for the file, and click [Save].**

Note

- [Back up IPsec Settings] appears only when the administrator password is specified.

Restore Setting Tab

Important

- **When the machine is returned from repair, it is important that you restore the machine's settings from the backup files. The machine's settings are returned to the default after repair.**

Restore Setting

Item	Description
File to Restore	Enter the path and name of the file to restore, or click [Browse...] to select the file.

Follow the procedure below to restore configuration backup files.

1. **Click [Browse...].**
2. **Navigate to the directory containing the backup file to restore.**
3. **Select the backup file, and click [Open].**
4. **Enter the administrator password if required.**
5. **Click [OK].**

Note

- If the settings are not restored successfully, an error message appears. Try again to restore the file completely.

Set Date/Time Tab

Set Date

Item	Description
Year	Enter the current year (2000 to 2099).
Month	Enter the current month (1 to 12).

Item	Description
Day	Enter the current day (1 to 31).
Date Format	Select the date format from [MM/DD/YYYY], [DD/MM/YYYY], or [YYYY/MM/DD].

Set Time

Item	Description
Time Format	Select 24- or 12-hour time format.
Time (AM/PM)	Select [AM] or [PM] if 12-hour time format is selected.
hour (0-23)	Enter the current hour if 24-hour time format is selected (0-23).
hour (1-12)	Enter the current hour if 12-hour time format is selected (1-12).
min. (0-59)	Enter the current minute (0-59).

Energy Saver Mode Tab

Energy Saver Mode

Item	Description
Energy Saver Mode 1	Select [Active] to set the machine to enter Energy Saver mode 1 if the machine has been idle for about 30 seconds. It takes less time to recover from Energy Saver mode 1 than from power-off state or Energy Saver mode 2, but power consumption is higher in Energy Saver mode 1 than in Energy Saver mode 2.
Energy Saver Mode 2	Select [Active] to set the machine to enter Energy Saver mode 2 after the period of time specified for [Waiting Time (1-240)] is passed (1 to 240 minutes). The machine consumes less power in Energy Saver mode 2 than in Energy Saver mode 1, but it takes longer to recover from Energy Saver mode 2 than from Energy Saver mode 1.

Note

- The machine recovers from Energy Saver mode when it receives a print job, prints a received fax, or when the [Copy] or [Start] key is pressed.

9. Maintaining the Machine

Replacing the Print Cartridge

Important

- Store print cartridge in a cool dark place.
- Actual printable numbers vary depending on image volume and density, number of pages printed at a time, paper type and size, and environmental conditions such as temperature and humidity. Toner quality degrades over time. Early replacement of the print cartridge might be necessary. Therefore, we recommend you always keep a new print cartridge ready.
- For good print quality, the manufacturer recommends that you use genuine toner from the manufacturer.
- The manufacturer shall not be responsible for any damage or expense that might result from the use of parts other than genuine parts from the manufacturer with your office products.

Messages on the screen

- Replace the print cartridge when "Replacement Required: Print Cartridge" appears on the screen.
- Prepare a new print cartridge when "Replace Required Soon: Print Cartridge" appears on the screen.

Important

- Do not allow paper clips, staples, or other small objects to fall inside the machine.
- Do not expose the print cartridge without its cover to direct sunlight for a long time.
- Do not touch the print cartridge's photo conductor unit.

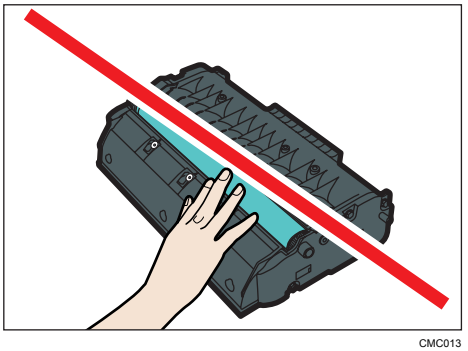

CMC013

- Do not touch the ID chip on the side of the print cartridge as indicated in the illustration below.

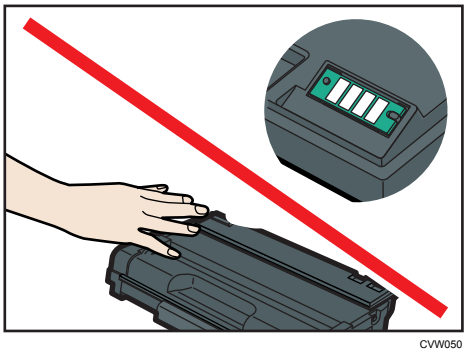

CVW050

- If toner runs out, you cannot print until the print cartridge is replaced.

1. If paper is loaded in the bypass tray, remove the paper and close the bypass tray.
2. Push the side button to open the front cover, and then carefully lower it.

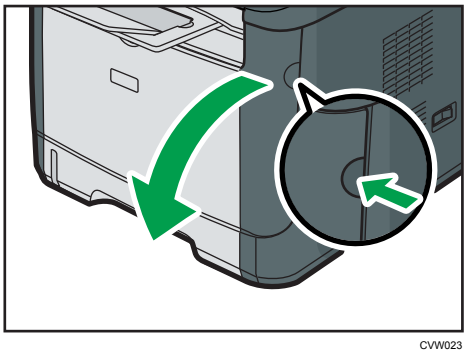

CVW023

3. Carefully pull out the print cartridge horizontally, holding its center.

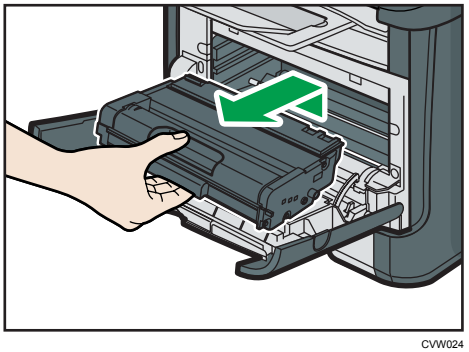

CVW024

- Do not shake the removed print cartridge. Doing so can cause remaining toner to leak.
- Place the old print cartridge on paper or similar material to avoid dirtying your workspace.

4. **Take the new print cartridge out of the box, and then take it out of the plastic bag.**

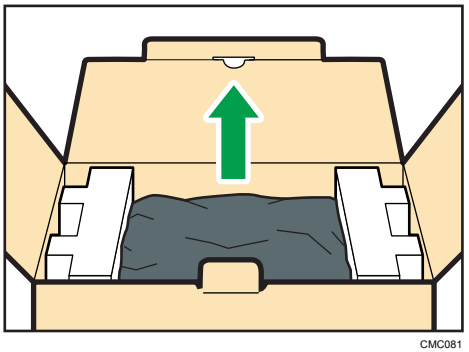

CMC081

5. **Place the print cartridge on a flat surface, and then remove the protection sheet.**

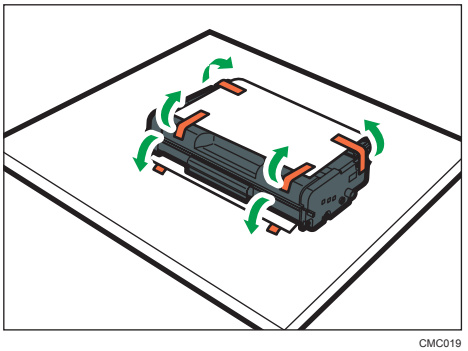

CMC019

6. **Hold the print cartridge and shake it from side to side five or six times.**

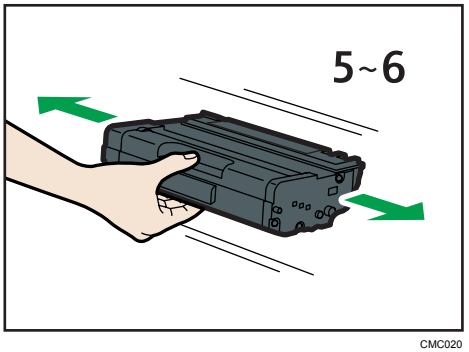

CMC020

Even distribution of toner within the bottle improves print quality.

7. **Slide the print cartridge in horizontally. When the cartridge can go no further, raise it slightly and push it fully in. Then push down on the cartridge until it clicks into place.**

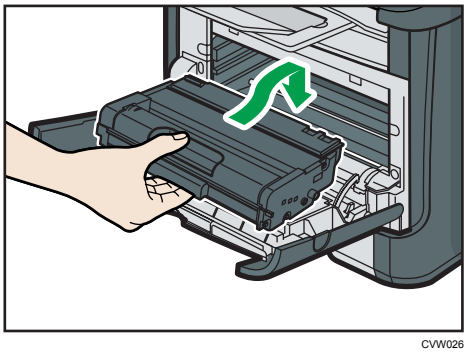

CVW026

8. **Carefully push up the front cover until it closes. Be careful not to trap your fingers.**

   After closing the front cover, wait until the initial screen is displayed.

9. **Put the protective sheet you removed in Step 5 on the old print cartridge. Then, put the old print cartridge into the bag, and then put it into the box.**

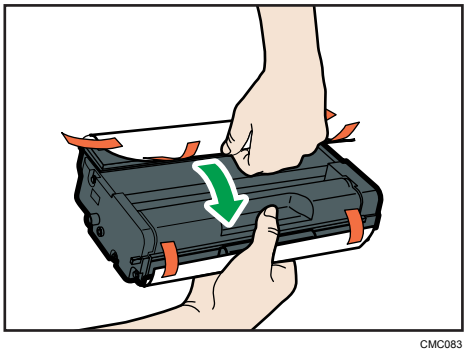

CMC083

Note

- Make sure to cover the old print cartridge with the protective cover for recycling and environmental purposes.
- Comply with the print cartridge Recycling Program, whereby used print cartridges are collected for processing. For details, ask your sales or service representative.

Cautions When Cleaning

Clean the machine periodically to maintain high print quality.

Dry wipe the exterior with a soft cloth. If dry wiping is not sufficient, wipe with a soft, damp cloth that has been wrung out thoroughly. If you still cannot remove the stain or grime, use a neutral detergent, wipe over the area with a thoroughly-wrung damp cloth, and then dry wipe the area and allow it to dry.

Important

- To avoid deformation, discoloration, or cracking, do not use volatile chemicals, such as benzine and thinner, or spray insecticide on the machine.
- If there is dust or grime inside the machine, wipe with a clean, dry cloth.
- You must disconnect the plug from the wall outlet at least once a year. Clean away any dust and grime from the plug and outlet before reconnecting. Accumulated dust and grime pose a fire hazard.
- Do not allow paper clips, staples, or other small objects to fall inside the machine.

Cleaning the Friction Pad and Paper Feed Roller

1. **Turn off the power.**
2. **Unplug the power cord from the wall outlet. Remove all the cables from the machine.**
3. **Pull out tray 1 carefully with both hands.**

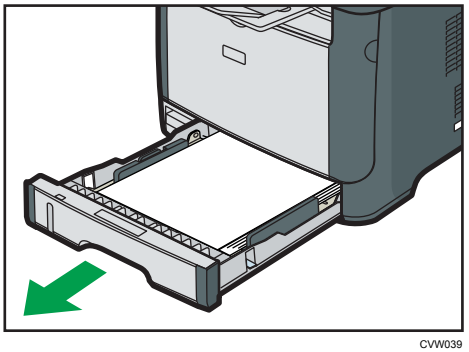

CVW039

Place the tray on a flat surface. If there is paper in the tray, remove it.

4. **Wipe the friction pads with a damp cloth.**

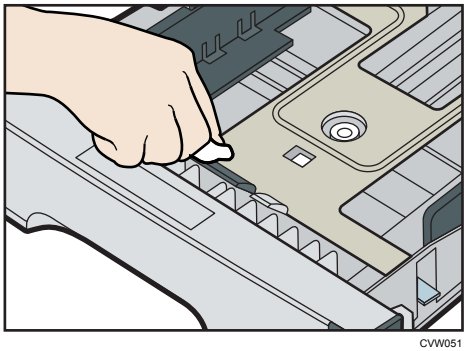

CVW051

5. **Wipe the rubber part of the roller with a soft damp cloth. After that, wipe it with a dry cloth to remove the moisture.**

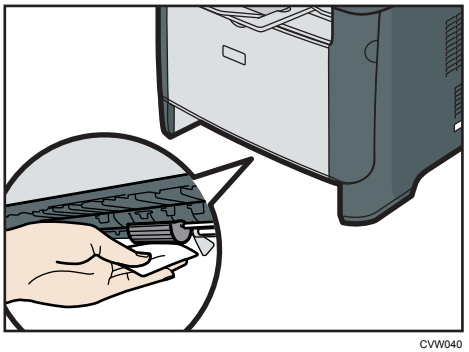

CVW040

6. **Reload the removed paper into the tray, and then push the tray carefully into the machine until it clicks into place.**

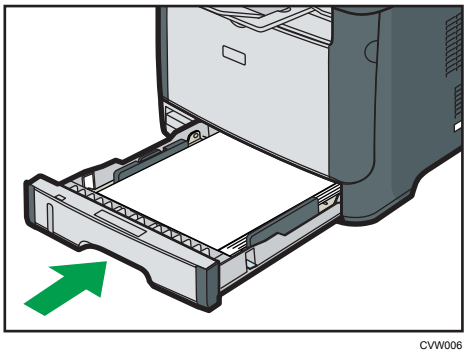

CVW006

7. **Insert the plug of the power cord into the wall socket securely. Connect all the interface cables that were removed.**
8. **Turn on the power.**

Note

- If jams or multi-sheet feeds occur after cleaning the friction pad, contact your sales or service representative.

Cleaning the Exposure Glass and ADF

Cleaning the Exposure Glass

1. **Lift the exposure glass cover.**

   Be careful not to hold the input tray when lifting the exposure glass cover, for the tray might be damaged.

2. **Clean the parts indicated with arrows with a soft damp cloth and then wipe the same parts with a dry cloth to remove any remaining moisture.**

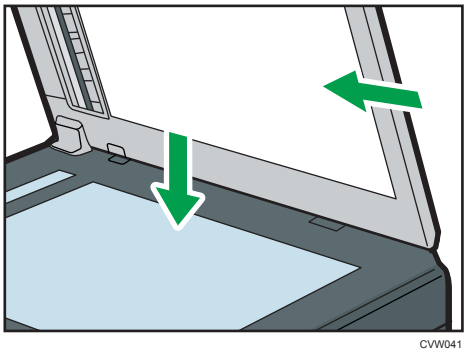

CVW041

Cleaning the ADF

The following procedure describes how to clean the ADF.

1. **Lift the ADF.**

   Be careful not to hold the input tray when lifting the ADF, for the tray might be damaged.

2. **Clean the parts indicated with arrows with a soft damp cloth and then wipe the same parts with a dry cloth to remove any remaining moisture.**

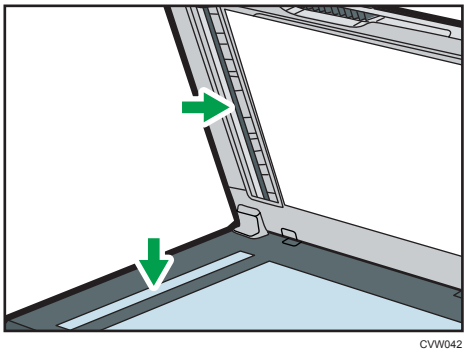

CVW042

10. Troubleshooting

Common Problems

This section describes how to troubleshoot common problems that may occur while operating the machine.

Problem	Possible cause	Solution
The machine does not turn on.	The power cord is not connected properly.	• Make sure that the power plug is firmly inserted into the wall outlet. • Make sure that the wall outlet is not defective by connecting another working device.
An error message is shown on the machine's screen.	An error has occurred.	See page 232 "Error and Status Messages on the Screen".
Pages do not print.	The machine is warming up or receiving data.	Wait until "Printing..." appears on the screen. If "Processing..." is displayed on the screen, the machine is receiving data.
Pages are not printed.	The interface cable is not connected correctly.	• Reconnect the cable. • Check that the interface cable is the correct type.
Strange noise is heard.	The supplies are not properly installed.	Confirm that the supplies are properly installed.
The volume of the sounds produced by the machine is too loud.	The volume is set to the high level.	Adjust the volume of the beep, ring, speaker, and alarm sounds. For details, see page 147 "System Settings".
The volume of the sounds produced by the machine is too quiet.	The volume is muted or set to the low level.	Adjust the volume of the beep, ring, speaker, and alarm sounds. For details, see page 147 "System Settings".

Note

- If any of these problems persist, turn off the power, pull out the power cord, and contact your sales or service representative.

Paper Feed Problems

If the machine is operating but paper will not feed or paper jams occur frequently, check the condition of the machine and paper.

Problem	Solution
Paper does not feed smoothly.	• Use supported types of paper. See page 35 "Supported Paper". • Load paper correctly, making sure that the paper guides are properly adjusted. See page 41 "Loading Paper". • If the paper is curled, straighten the paper. • Take out the paper from tray and fan it well. Then, reverse the top and bottom of the paper, and put it back in the tray.
Paper jams occur frequently.	• If there are gaps between the paper and the paper guides, adjust the paper guides to remove the gaps. • Avoid printing on both sides of paper when printing images that contain large solid areas, which consume a lot of toner. • Use supported types of paper. See page 35 "Supported Paper". • Load paper only as high as the upper limit markings on the paper guide. • Make sure that the friction pads and paper feed rollers are clean. See page 206 "Cleaning the Friction Pad and Paper Feed Roller".

Problem	Solution
Multiple sheets of paper are fed at one time.	• Fan the paper well before loading. Also make sure that the edges are even by tapping the stack on a flat surface such as a desk. • Make sure that the paper guides are in the right position. • Use supported types of paper. See page 35 "Supported Paper". • Load paper only as high as the upper limit markings on the paper guide. • Make sure that the friction pads and paper feed rollers are clean. page 35 "Supported Paper". • Check that paper was not added while there was still some left in the tray. Only add paper when there is none left in the tray.
Paper gets wrinkles.	• Paper is damp. Use paper that has been stored properly. See page 35 "Supported Paper". • Paper is too thin. See page 35 "Supported Paper". • If there are gaps between the paper and the paper guides, adjust the paper guides to remove the gaps.
The printed paper is curled.	• Load the paper upside down in the paper tray. • If the paper curl is severe, take prints from the output tray more frequently. • Paper is damp. Use paper that has been stored properly. See page 35 "Supported Paper".
Images are printed diagonally to the pages. 	If there are gaps between the paper and the paper guides, adjust the paper guides to remove the gaps.

Removing Printing Jams

Important

- Jammed paper may be covered in toner. Be careful not to get toner on your hands or clothes.
- Toner on prints made immediately after clearing a paper jam may be insufficiently fused and can smudge. Make test prints until smudges no longer appear.
- Do not forcefully remove jammed paper, as it may tear. Torn pieces remaining inside the machine will cause further jams and possibly damage the machine.
- Paper jams can cause pages to be lost. Check your print job for missing pages and reprint any pages that did not print out.

Removing Jammed Paper from Tray 1

If "Internal Misfeed" or "Misfeed: Tray 1" appears on the display, follow the procedure below to remove it.

1. **Pull tray 1 halfway out, and check for jammed paper. If there is jammed paper, remove it carefully.**

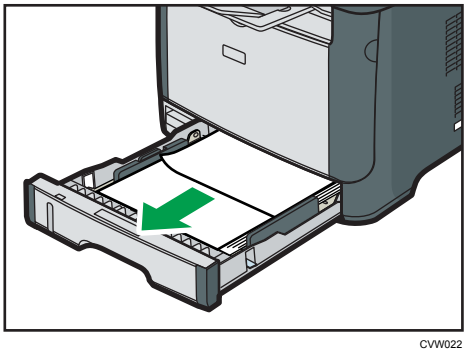

CVW022

2. **Carefully slide tray 1 back in until it stops.**
3. **If paper is loaded in the bypass tray, remove the paper.**
4. **Close the bypass tray.**

5. **Push the side button to open the front cover, and then carefully lower it.**

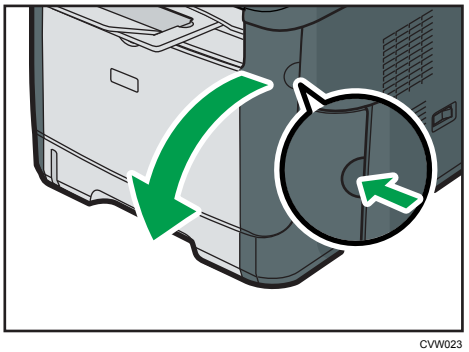

CVW023

6. **Carefully pull out the print cartridge horizontally, holding its center.**

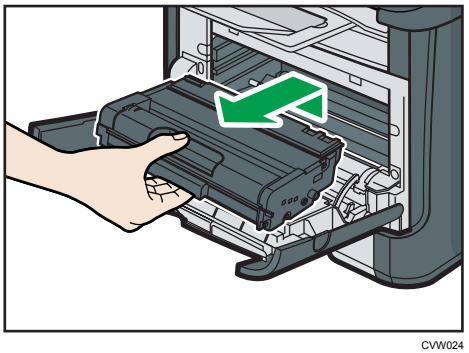

CVW024

- Do not shake the removed print cartridge. Doing so can cause remaining toner to leak.
- Place the print cartridge on paper or similar material to avoid dirtying your workspace.

7. **Lifting the guide plate, remove the jammed paper carefully.**

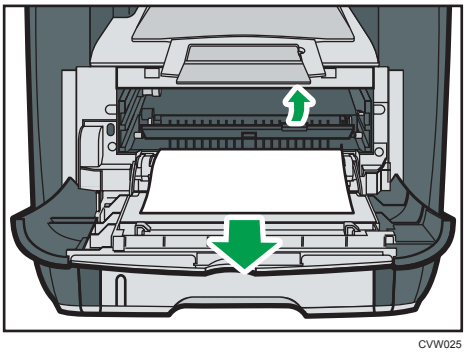

CVW025

8. **Slide the print cartridge in horizontally. When the cartridge can go no further, raise it slightly and push it fully in. Then push down on the cartridge until it clicks into place.**

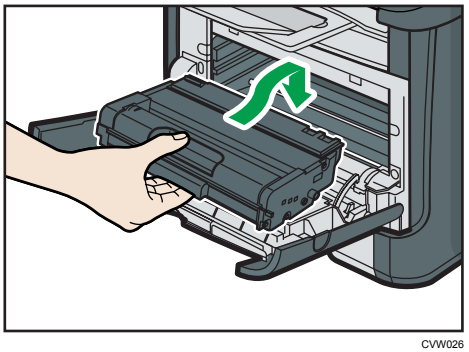

CVW026

9. **Using both hands, carefully push up the front cover until it closes.**

Note

- When closing the front cover, push the upper area of the cover firmly. After closing the cover, check that the error is cleared.

Removing Jammed Paper from the Bypass Tray

If "Misfeed: BypassTray" appears on the display, follow the procedure below to remove it.

1. **If paper is jammed in the bypass tray input area, remove the jammed paper carefully.**

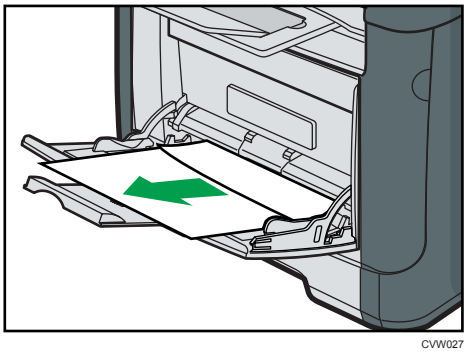

CVW027

2. **Close the bypass tray.**

3. **Push the side button to open the front cover, and then carefully lower it.**

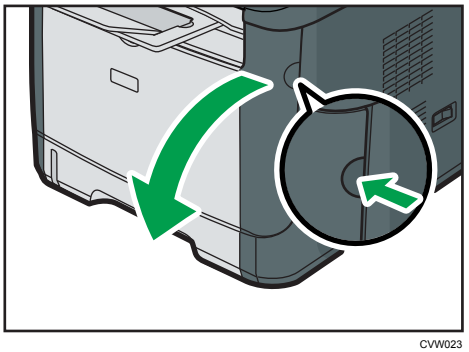

CVW023

4. **Carefully pull out the print cartridge horizontally, holding its center.**

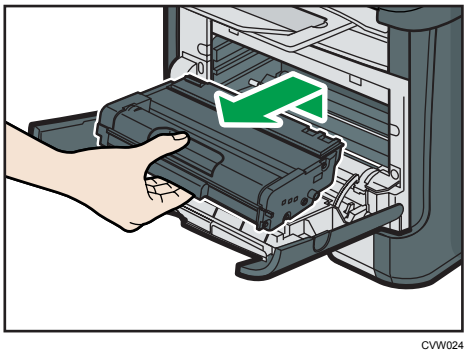

CVW024

- Do not shake the removed print cartridge. Doing so can cause remaining toner to leak.
- Place the print cartridge on paper or similar material to avoid dirtying your workspace.

5. **Lifting the guide plate, remove the jammed paper carefully.**

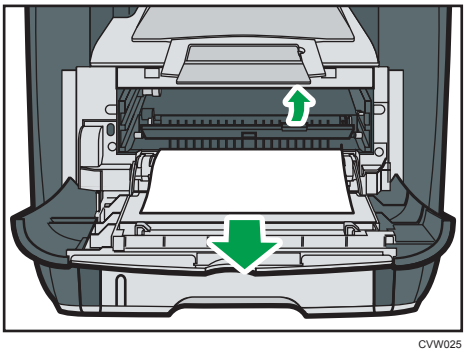

CVW025

6. **Slide the print cartridge in horizontally. When the cartridge can go no further, raise it slightly and push it fully in. Then push down on the cartridge until it clicks into place.**

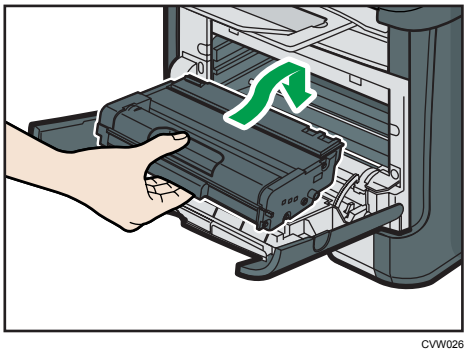

CVW026

7. **Using both hands, carefully push up the front cover until it closes.**

Note

- When closing the front cover, push the upper area of the cover firmly. After closing the cover, check that the error is cleared.

Removing Jammed Paper from the standard tray or duplex unit

If "Misfeed: Stnd. Tray" or "Misfeed: Dup. Unit Remove Paper" appears on the display, follow the procedure below to remove it.

1. **Open the rear cover.**

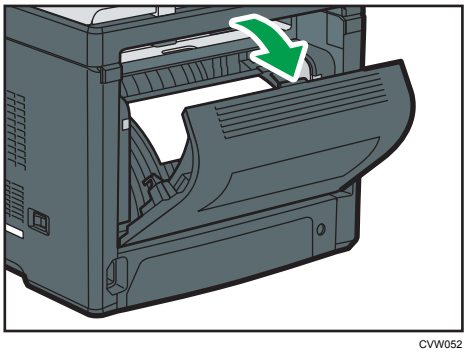

CVW052

2. **Remove the jammed paper carefully.**

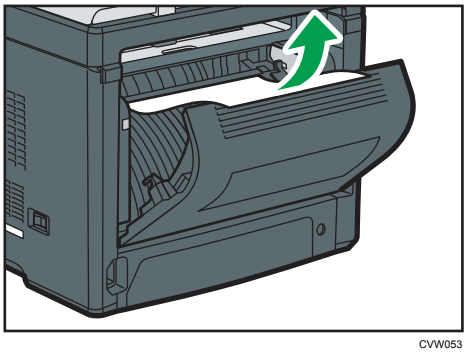

CVW053

3. **Close the rear cover.**

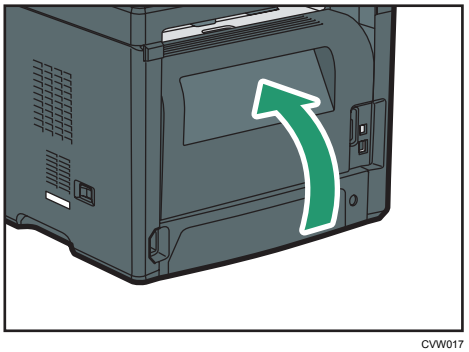

CVW017

4. **Pull tray 1 halfway out, and check for jammed paper. If there is jammed paper, remove it carefully.**

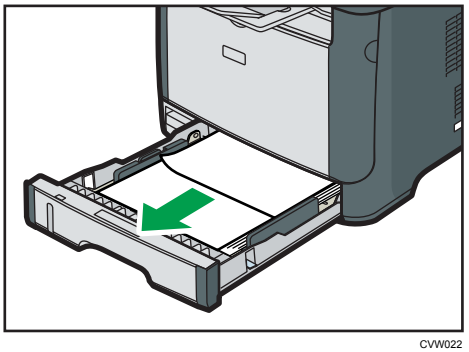

CVW022

5. **Pull tray 1 out completely with both hands.**

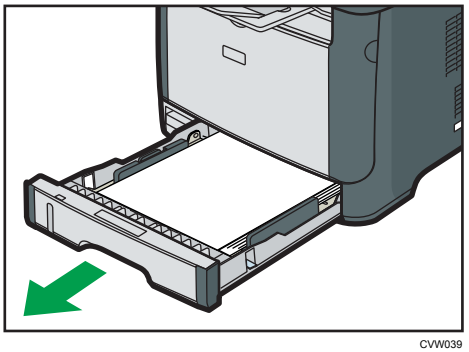

CVW039

Place the tray on a flat surface.

6. **Push the lever.**

Pushing the lever lowers the duplex transport unit.

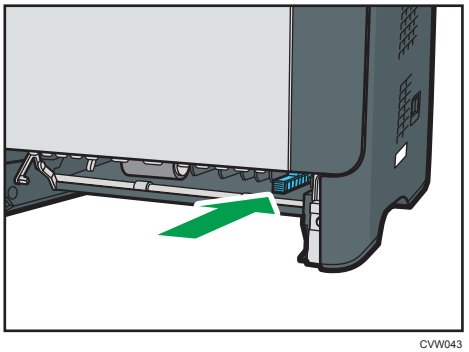

CVW043

7. **If there is jammed paper, carefully remove it.**

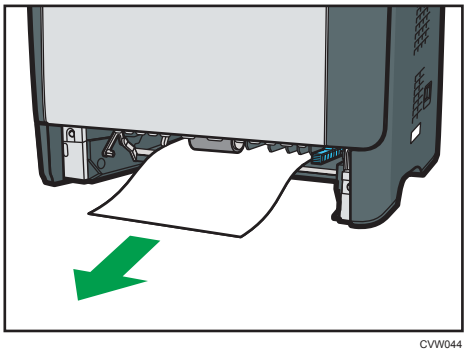

CVW044

8. **With the duplex transport unit still lowered, carefully slide tray 1 back in until it stops.**

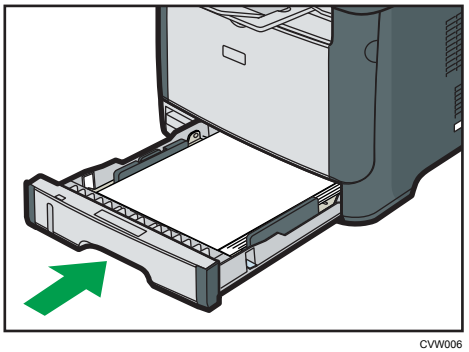

CVW006

9. **If paper is loaded in the bypass tray, remove the paper and close the bypass tray.**
10. **Push the side button to open the front cover, and then carefully lower it.**

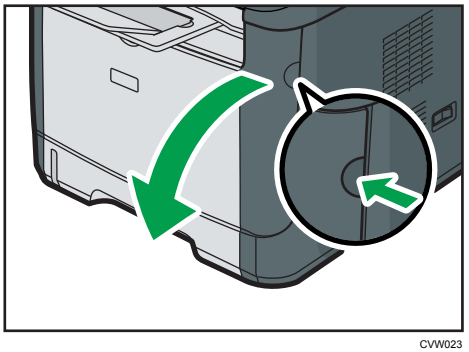

CVW023

11. **Carefully pull out the print cartridge horizontally, holding its center.**

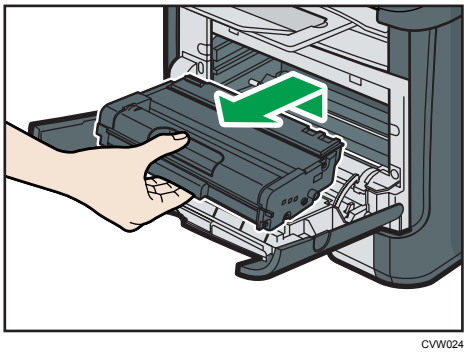

CVW024

- Do not shake the removed print cartridge. Doing so can cause remaining toner to leak.
- Place the print cartridge on paper or similar material to avoid dirtying your workspace.

12. **Lifting the guide plate, remove the jammed paper carefully.**

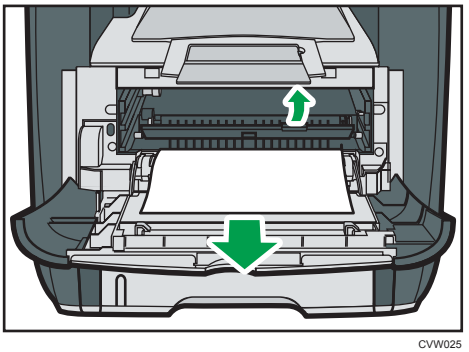

CVW025

13. **Slide the print cartridge in horizontally. When the cartridge can go no further, raise it slightly and push it fully in. Then push down on the cartridge until it clicks into place.**

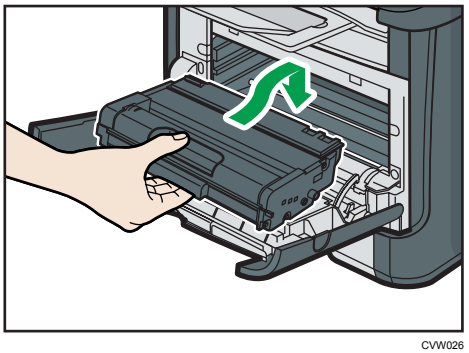

CVW026

14. **Using both hands, carefully push up the front cover until it closes.**

Note

- When closing the covers, push the covers firmly. After closing the covers, check that the error is cleared.

Removing Scanning Jams

When the following message appears on the screen, follow the procedure below to remove the original jammed in the ADF:

- "ADF Orig. Misfeed Open ADF Cover and remove paper."

1. **Open the ADF cover.**

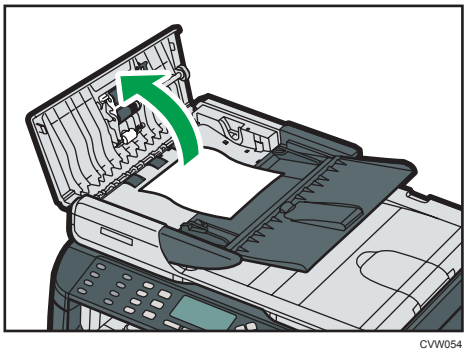

CVW054

2. **Gently pull the jammed original to remove it. Be careful not to pull the original too hard, as it may rip.**

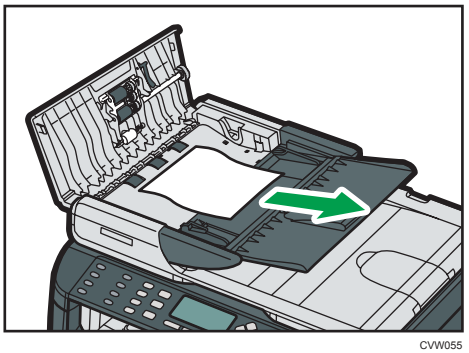

CVW055

3. **Close the ADF cover.**
4. **Lift the ADF, and if there is original remaining in the ADF, gently pull the jammed original to remove it.**

   Be careful not to hold the input tray when lifting the ADF, for the tray might be damaged.

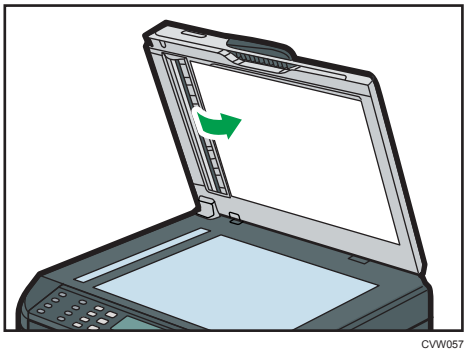

CVW057

5. **Close the ADF.**

Print Quality Problems

Checking the Condition of the Machine

If there is a problem with the quality of printing, first check the condition of the machine.

Possible Cause	Solution
There is a problem with the machine's location.	Make sure that the machine is on a level surface. Place the machine where it will not be subject to vibration or shock.
Unsupported types of paper is used.	Make sure that the paper being used is supported by the machine. See page 35 "Supported Paper".
The paper type setting is incorrect.	Make sure that the paper type setting of the printer driver matches the type of paper loaded. See page 35 "Supported Paper".
A non-genuine print cartridge is being used.	Refilled or non-genuine print cartridge reduces print quality and can cause malfunctions. Use genuine print cartridge only. See page 251 "Consumables".
An old print cartridge is being used.	Print cartridge should be opened before their expiration date and used within six months of being opened.
The machine is dirty.	See page 201 "Maintaining the Machine", and clean the machine as required.
Humidity level surrounding the machine may be too low.	Using the machine in a room where humidity level is too low may cause black lines of a few millimeters thick to appear on printouts with 75-millimeter spaces in between. In this case, set [Low Humidity Mode] to [On]. For details about how to configure the settings, see page 147 "System Settings".

Printer Problems

This section describes printing problems and possible solutions.

Problem	Solution
An error occurs.	If an error occurs when printing, change the computer or printer driver settings. • Check the printer icon name does not exceed 32 alphanumeric characters. If it does, shorten it. • Check whether other applications are operating. Close any other applications, as they may be interfering with printing. If the problem is not resolved, close unneeded processes too. • Check that the latest printer driver is being used.
A print job is canceled.	Set [I/O Timeout] to a larger value than the current setting.
There is considerable delay between the print start command and actual printing.	• Processing time depends on data volume. High volume data, such as graphics-heavy documents, take longer to process. • To speed up printing, reduce the printing resolution using the printer driver. For details, see the printer driver Help.
Prints fall in front of the machine when they are output.	Raise the stop fence. See "Loading Paper", Quick Installation Guide.
Prints do not stack properly.	• Paper is damp. Use paper that has been stored properly. See page 35 "Supported Paper". • Raise the stop fence. See "Unpacking", Quick Installation Guide.
The whole printout is blurred.	• Paper is damp. Use paper that has been stored properly. See page 35 "Supported Paper". • If you enable [Toner Saving], printing is generally less dense. • Toner is almost depleted. Replace the print cartridge. • Condensation may have collected. If rapid change in temperature or humidity occurs, use this machine only after it has acclimatized.

Problem	Solution
The toner is powdery and comes away from the paper, or the printed image has a matt appearance.	Check if the levers for printing on envelopes inside the rear cover are properly set. Pull up the levers.
Printed envelopes come out creased.	Check if the levers for printing on envelopes inside the rear cover are properly set. Lower the levers.
Documents are not printed properly when using a certain application, or image data is not printed properly. Some characters are printed faintly or not printed.	Change the print quality settings.

Print Positions Do Not Match Display Positions

If the position of items on the printed page differs from the position displayed on the computer screen, the cause may be one of the following.

Possible Cause	Solution
Page layout settings have not been configured.	Check that the page layout settings are properly configured in the application.
The paper size setting does not match the paper loaded.	Make sure the paper size selected in the printer properties dialog box matches the size of the paper loaded. For details, see the printer driver Help.
The printable area has been changed.	Set the printable area to maximum. For details, see the printer driver Help.

Note

- If the position of items on the printed page differs slightly from the position displayed on the computer screen even after performing the above procedures, you can adjust the printing position of each tray in the range of -1.5 to +1.5 mm.

Copier Problems

Problem	Solution
Photocopied pages are not in correct order.	On the control panel, change the [Sort] setting under copy settings to collate pages as you require. For details about [Sort], see page 134 "Copier Features Settings".
Photocopied paper is blank.	The original is not set correctly. When using the exposure glass, place originals copy side down. When using the ADF, place them copy side up. See page 51 "Placing Originals".
The wrong original was copied.	If copying from the exposure glass, make sure that there are no originals in the ADF.
Copied pages are too dark or too light.	Adjust the image density. See page 93 "Specifying the Scan Settings".
Copied pages do not look the same as the originals.	Select the correct scan mode according to the type of original. See page 78 "Specifying the Scan Settings".
Black spots appear when photocopying a photographic print.	The original may have stuck to the exposure glass due to high humidity. Place the original on the exposure glass, and then place two or three sheets of white paper on top of it. Leave the ADF open when copying.
A moire pattern is produced.	The original probably has heavily lined or dotted areas. Switching the setting for image quality between [Photo] and [Mixed] may eliminate the moire pattern. See page 93 "Specifying the Scan Settings".

Problem	Solution
Photocopied paper is dirty.	• Image density is too high. Adjust the image density. See page 93 "Specifying the Scan Settings". • Toner on the printed surface is not dry. Do not touch printed surfaces immediately after copying. Remove freshly printed sheets one by one, taking care not to touch printed areas. • The exposure glass or ADF is dirty. See page 201 "Maintaining the Machine". • Before placing originals on the exposure glass, make sure that toner or correction fluid is dry.
When copying from the exposure glass, the print area of the copy is out of alignment with the original.	Place the original copy side down, making sure that it is aligned to the rear left corner and pressed flat against the exposure glass.

Scanner Problems

Problem	Solution
The machine does not start scanning.	The ADF or its cover is open. Close the ADF or its cover.
The scanned image is dirty.	• The exposure glass or ADF is dirty. See page 201 "Maintaining the Machine". • Before placing originals on the exposure glass, make sure that toner or correction fluid is dry.
The scanned image is distorted or out of position.	The original was moved during scanning. Do not move the original during scanning.
The scanned image is upside down.	The original was placed upside down. Place the original in the correct orientation. See page 51 "Placing Originals".
The scanned image is blank.	The original was placed with the front and back reversed. When using the exposure glass, place originals copy side down. When using the ADF, place originals copy side up. See page 51 "Placing Originals".
The scanned image is too dark or too light.	Adjust the image density. See page 93 "Specifying the Scan Settings".

Fax Problems

When an error code appears on the fax journal or transmission status report

The table below describes the meaning of error codes that appear under "Results" on the fax journal or transmission status report, and what to do when a particular error code appears.

"X" indicates a number in an error code that appear differently depending on a specific situation.

Error Code	Solution
1XXX11	An original has been jammed inside the ADF while sending a fax in Immediate Transmission mode. • Remove jammed originals, and then place them again. See page 211 "Paper Feed Problems". • Check the originals are suitable for scanning. See page 51 "Placing Originals".
1XXX21	The line could not be connected correctly. • Confirm that the telephone line is properly connected to the machine. • Disconnect the telephone line from the machine, and connect a standard telephone in its place. Confirm that you can make calls using the telephone. If you cannot make calls this way, contact your telephone company. • If the problem persists, contact your sales or service representative.
1XXX22 to 1XXX23	Dial fails when trying to send faxes. • Confirm that the fax number you dialed is correct. • Confirm that the destination is a fax machine. • Confirm that the line is not busy. • You may need to insert a pause between dial digits. Press the [Pause/Redial] key after, for example, the area code. • Confirm that [PSTN / PBX] under [Admin. Tools] is set properly for your connection method to the telephone network. See page 166 "Administrator Settings".

Error Code	Solution
1XXX32 to 1XXX84	An error occurred while sending a fax. • Confirm that the telephone line is properly connected to the machine. • Disconnect the telephone line from the machine, and connect a standard telephone in its place. Confirm that you can make calls using the telephone. If you cannot make calls this way, contact your telephone company. • If the problem persists, contact your sales or service representative.
2XXX14	The machine was not able to print the received fax, or the machine's memory reached capacity while receiving a fax because the document was too large. • The paper tray was empty. Load paper in the paper tray. See page 41 "Loading Paper". • The paper tray did not contain A4, Letter, or Legal size paper. Load valid size paper in the tray, and configure the paper size settings under [System Settings] accordingly. • A cover or tray was open. Close the cover or tray. • There was a paper jam. Remove the jammed paper. See page 211 "Paper Feed Problems". • A print cartridge was empty. Replace the print cartridge. See page 201 "Replacing the Print Cartridge". • The received fax was too large. Ask the sender to re-send the document in parts as several smaller individual faxes, or to send at a lower resolution.
2XXX32 to 2XXX84	An error occurred while receiving a fax. • Confirm that the telephone line is properly connected to the machine. • Disconnect the telephone line from the machine, and connect a standard telephone in its place. Confirm that you can make calls using the telephone. If you cannot make calls this way, contact your telephone company. • If the problem persists, contact your sales or service representative.

When other problems occur

The table below describes how to troubleshoot problems that do not produce an error code.

Problem	Solution
Cannot send faxes.	• See the solutions provided for errors 1XXX32 to 1XXX84 in the above table. • The machine cannot accept a new fax job because there are 5 unsent faxes in memory already. Wait until any of those faxes is transmitted completely, or use the [Delete TX Standby File] function to delete unnecessary faxes. For details, see page 142 "Fax Features Settings".
Cannot receive faxes.	See the solutions provided for errors 2XXX32 to 2XXX84 in the above table.
Cannot receive faxes even when sending them is possible.	• A print cartridge is empty. Replace the print cartridge. See page 201 "Replacing the Print Cartridge". • The paper tray is empty. Load paper in the paper tray. See page 41 "Loading Paper". • If fax reception mode is FAX/TEL Manual mode, you must receive the fax manually. See page 127 "Receiving a Fax".
Cannot print received faxes.	• The paper tray is empty. Load paper in the paper tray. See page 41 "Loading Paper". • The paper tray does not contain paper of the right size. Load paper of the right size in the paper tray.
Faxes you sent appear spotty or dirty when received.	• The exposure glass or ADF is dirty. See page 201 "Maintaining the Machine". • Before placing originals on the exposure glass, make sure that ink or correction fluid is dry.
A fax you sent appears blank when received.	The original was placed upside down. Place the original in the correct orientation. See page 51 "Placing Originals".
The background of received images is dirty, or images from the rear side of the originals are visible.	Image density is too high. Adjust the image density.
Dial fails when trying to send faxes.	See the solutions provided for errors 1XXX22 to 1XXX23 in the above table.

Error and Status Messages on the Screen

Messages are listed in alphabetical order in the table below.

"X" indicates the parts of the messages that appear differently depending on a specific situation, such as the paper sizes, paper types, or tray names.

Message	Causes	Solutions
2XXX14	The machine was not able to print the received fax, or the machine's memory reached capacity while receiving a fax because the document was too large.	• The paper tray was empty. Load paper in the paper tray. See page 41 "Loading Paper". • The paper tray did not contain A4, Letter, or Legal size paper. Load valid size paper in the tray, and configure the paper size settings under [System Settings] accordingly. • A cover or tray was open. Close the cover or tray. • There was a paper jam. Remove the jammed paper. See page 211 "Paper Feed Problems". • A print cartridge was empty. Replace the print cartridge. See page 201 "Replacing the Print Cartridge". • The received fax was too large. Ask the sender to resend the document in parts as several smaller individual faxes, or to send at a lower resolution.
ADF Cover Open Close ADF Cover	The ADF cover is open.	• Close the cover completely.
ADF Orig. Misfeed Open ADF Cover and remove paper.	An original has been jammed inside the ADF.	• Remove jammed originals, and then place them again. See page 211 "Paper Feed Problems". • Check the originals are suitable for scanning. See page 51 "Placing Originals".

Message	Causes	Solutions
Available: IDCard Copy A4 or 8 1/2 x 11	ID card copy could not be performed because the tray does not contain the valid size paper, which are A4 or Letter size.	• Set the machine to print copies using the A4 or Letter size paper in the [Select Paper] setting. See page 134 "Copier Features Settings". • Specify the A4 or Letter size paper for the tray selected for printing copies. See page 147 "System Settings".
Busy	Fax transmission could not be completed because the destination's line was busy.	Wait for a while and send the fax again.
Cannot Copy This Setting Comb.: 2 on 1 / 4 on 1	Combined copying could not be performed because the tray does not contain the valid size paper, which are A4, Letter, or Legal size.	• Set the machine to print copies using the A4, Letter, or Legal size paper in the [Select Paper] setting. See page 134 "Copier Features Settings". • Specify the A4, Letter, or Legal size paper for the tray selected for printing copies. See page 147 "System Settings".
Cannot copy. Set original to ADF.	Combined copying could not be performed because the originals were not placed in the ADF.	• Use the ADF, even when copying a single sheet. • If you need to use the exposure glass, turn off combined copying in [Duplex/Combine] under copy settings, and then try again. See page 134 "Copier Features Settings".
Check Paper Size	The paper size set for the document differs from the size of the paper in the indicated tray.	Press [FormFeed] to begin printing, or press [JobReset] to cancel the job.
Check Paper Type	The paper type set for the document differs from the type of the paper in the indicated tray.	Press [FormFeed] to begin printing, or press [JobReset] to cancel the job.

Message	Causes	Solutions
Connection Failed	The line could not be connected correctly.	• Confirm that the telephone line is properly connected to the machine. • Disconnect the telephone line from the machine, and connect a standard telephone in its place. Confirm that you can make calls using the telephone. If you cannot make calls this way, contact your telephone company.
Cover open	A cover is open.	Close the cover completely.
Dest. is not Programmed	No Quick Dial entry is associated with the One Touch button you pressed.	• Press a different One Touch button. • Assign a registered destination to the One Touch button. See page 82 "Registering Scan Destinations".
Dial Failed	The fax could not be sent.	• Confirm that the fax number you dialed is correct. • Confirm that the destination is a fax machine. • Confirm that the line is not busy. • You may need to insert a pause between dial digits. Press the [Pause/Redial] key after, for example, the area code.
Exceeded Max.E-mail Size	The scan file exceeds the size limit for files that can be sent through e-mail.	• Configure [Resolution] under scanner settings to reduce the scanning resolution. See page 138 "Scanner Features Settings". • Configure [Max. E-mail Size] under scanner settings to increase the allowed size. See page 138 "Scanner Features Settings".
Fax Job Memory Overflow	The number of fax jobs in memory (unsent or unprinted faxes) has reached maximum, so new jobs cannot be stored.	Wait until pending jobs have been transmitted or printed.

Message	Causes	Solutions
I-Fax POP3 fails	Connection to the POP3 server failed.	• Confirm that the network cable is properly connected to the machine. • Confirm that the network settings such as IP address, DNS, and POP3 settings have been configured properly (make sure that no double-byte character is used). See page 183 "Configuring the Network Settings".
Indep.Sply.Prt.Cart.	A non-supported print cartridge is installed.	Remove and replace it with a print cartridge specified by an authorized dealer.
Internal Misfeed	Paper has been jammed in the machine.	Remove the jammed paper. See page 211 "Paper Feed Problems".
Memory Almost Full	Memory has almost reached capacity during sort copy.	If several originals are still to be scanned, it is recommended to start printing now, and copy the remaining originals separately. If originals are being scanned from the ADF, remove any remaining pages from the ADF.
Memory Overflow	The data is too large or complex to print.	• Select [600 × 600 dpi] in [Resolution] under [Printer Features] to reduce the size of data. See page 155 "Printer Features Settings". • If using the PCL6 printer driver, set [Resolution] in [Print Quality] to [600 × 600 dpi].

Message	Causes	Solutions
Memory Overflow	• The machine's memory reached capacity while scanning the first page of the original to store a fax job in memory before transmission. • The machine's memory reached capacity while storing a fax in memory in Memory Transmission mode.	Resend the fax in parts as several smaller individual faxes, or send at a lower resolution.
Memory Overflow TX Cancel	Memory has reached capacity while scanning the second or later pages of the original when trying to send a fax in Memory Transmission mode.	Press [TX] to send only the pages that have been scanned in memory, or press [Cancel] to cancel.
Misfeed: BypassTray	Paper has been jammed in the bypass tray.	Remove the jammed paper. See page 211 "Paper Feed Problems".
Misfeed: Dup. Unit Remove Paper	Paper has been jammed in the duplex unit.	Remove the jammed paper. See page 211 "Paper Feed Problems".
Misfeed: Stnd. Tray	Paper has been jammed in the paper exit area.	Remove the jammed paper. See page 211 "Paper Feed Problems".
Misfeed: Tray 1	Paper has been jammed in the tray 1 paper input area.	Remove the jammed paper. See page 211 "Paper Feed Problems".
Net Communication Error	Connection with the server was lost while sending or receiving data.	Contact the network administrator.
Network is not Ready	A scanned file could not be sent because the machine has not received IP address information from the DHCP server completely.	Wait until the machine receives the IP address information completely, and then try the operation again.
On Hook or Stop key	The machine has been off-hook for an extended period of time.	Put down the handset or press the [Clear/Stop] key.

Message	Causes	Solutions
Out of Paper: X	The indicated tray has run out of paper.	Load paper to the indicated tray. See page 41 "Loading Paper".
Please Restart Machine	The machine needs to be restarted.	Turn off the power, and then turn it back on.
Print Cart. Set Error	The print cartridge has not been installed or has not been installed correctly.	Reinstall the print cartridge. See page 201 "Replacing the Print Cartridge".
Remove Paper: Bypass Tray	The machine failed to proceed with the print job, because tray 1 was specified as the input tray but paper was set in the bypass tray.	Remove paper from the bypass tray.
Replace Required Soon: Print Cartridge	The print cartridge is almost empty.	Prepare a new print cartridge.
Replacement Required: Fusing Unit	The fusing unit is no longer usable, and must be replaced.	Contact your sales or service representative.
Replacement Required: Paper Feed Roller	The paper feed roller is no longer usable, and must be replaced.	Contact your sales or service representative.
Replacement Required: Print Cartridge	The machine has run out of toner.	Replace the print cartridge. See page 201 "Replacing the Print Cartridge".
Replacement Required: Transfer Roller	The transfer roller is no longer usable, and must be replaced.	Contact your sales or service representative.
RX Comm. Error	A reception error occurred, and the fax could not be received correctly.	If possible, contact the sender of the fax and ask them to resend it.

Message	Causes	Solutions
Scan (NW) Disconnected	A scanned file could not be sent because the Ethernet cable was not connected properly.	Reconnect the Ethernet cable properly, and then try the operation again.
Scan (USB) Disconnected	The USB cable was disconnected while scanning from a computer.	Reconnect the USB cable properly, and then try the operation again.
Server Connection Failed	A scanned file could not be sent because the destination could not be reached.	Confirm that the destination is registered correctly, and then try the operation again.
Server Response Error	An error occurred in communication with the server before beginning transmission.	Confirm that the destination is registered correctly, and then try the operation again. If the problem could not be solved, contact the network administrator.
Service call - X	A fatal hardware error has occurred, and the machine cannot function.	Contact your sales or service representative.
Set Correct Paper	The paper tray does not contain A4, Letter, or Legal size paper.	While the message is displayed, press the [OK] key. A menu for changing the paper size of the current tray appears. Load A4/Letter/ Legal size paper in the tray, and then select the corresponding paper size using [▲] or [▼] key and press the [OK] key. The machine will then print out the fax. Note that the paper size setting for the tray under system settings will be changed. See page 147 "System Settings".
Set Original to ADF Cannot use exposure glass with set. in [Scan Size].	Scanning could not be performed because the originals were not placed in the ADF, even though the machine is set to scan originals larger than A4/Letter size.	• Use the ADF, even when scanning A4/Letter or smaller size originals. • If you need to use the exposure glass, set A4/Letter or smaller size in [Scan Size] under scanner settings, and then try again. See page 93 "Specifying the Scan Settings".

Message	Causes	Solutions
Sort Copy was Cancelled	The machine's memory reached capacity while originals were being scanned from the ADF to perform sort copying.	Press [Exit] to print the originals that were successfully scanned into memory. Then, copy again the originals left in the ADF.
TX Comm. Error	A transmission error occurred, and the fax could not be transmitted correctly.	If the [Auto Redial] setting is enabled, the machine will redial the number and try again. If all attempts fail, or if the machine is in Immediate Transmission mode, the fax will not be transmitted. Try the operation again.

11. Appendix

Functions and Network Settings Available in an IPv6 Environment

The functions and network settings of this machine that are available in an IPv6 environment differ from those available in an IPv4 environment. Make sure the functions you use are supported in an IPv6 environment, and then configure the necessary network settings.

For details about specifying the IPv6 settings, see page 159 "Network Settings".

Available Functions

FTP Printing

Prints documents via FTP using the EPRT and EPSV commands. Windows Vista/7/8 and an FTP application that supports IPv6 are required to use these commands.

Printer

Prints documents using the printer driver.

Scan to FTP

Delivers files that have been scanned using the control panel to an FTP server.

Scan to E-mail

Sends files scanned using the control panel via e-mail.

Scan to Folder

Sends files scanned using the control panel to a shared folder on a computer on the network.

Network TWAIN Server

Controls the scanning function from a computer on the network, and delivers scanned data to the computer directly. This function is available only to computers that have a TWAIN-supporting application. The IP address of the multi-cast group supported by IPv6 is ff12::fb88:1.

LAN-Fax

Sends a document created in an application as a fax and without printing it.

Web Image Monitor

Allows you to check the machine's status and configure its settings using a Web browser.

Configuration Page

Prints a configuration page that shows you the machine's configuration, IP address, and other details.

Transmission Using IPsec

For securer communications, this machine supports the IPsec protocol. When applied, IPsec encrypts data packets at the network layer using shared key encryption. The machine uses encryption key exchange to create a shared key for both sender and receiver. To achieve even higher security, you can also renew the shared key on a validity period basis.

Important

- IPsec is not applied to data obtained through DHCP, DNS, or WINS.
- IPsec compatible operating systems are Windows XP SP2, Windows Vista/7, Windows Server 2003/2003 R2/2008/2008 R2, Red Hat Enterprise Linux WS 4.0, and Solaris 10. However, some setting items are not supported depending on the operating system. Make sure the IPsec settings you specify are consistent with the operating system's IPsec settings.
- If you cannot access Web Image Monitor due to IPsec configuration problems, disable IPsec under [Admin. Tools] on the control panel, and then access Web Image Monitor.
- For details about specifying the IPsec settings using Web Image Monitor, see page 171 "Configuring the Machine Using Utilities".
- For details about enabling and disabling IPsec using the control panel, see page 159 "Network Settings".

Encryption and Authentication by IPsec

IPsec consists of two main functions: the encryption function, which ensures the confidentiality of data, and the authentication function, which verifies the sender of the data and the data's integrity. This machine's IPsec function supports two security protocols: the ESP protocol, which enables both of the IPsec functions at the same time, and the AH protocol, which enables only the authentication function.

ESP Protocol

The ESP protocol provides secure transmission through both encryption and authentication. This protocol does not provide header authentication.

- For successful encryption, both the sender and receiver must specify the same encryption algorithm and encryption key. The encryption algorithm and encryption key are specified automatically.
- For successful authentication, the sender and receiver must specify the same authentication algorithm and authentication key. The authentication algorithm and authentication key are specified automatically.

AH Protocol

The AH protocol provides secure transmission through authentication of packets only, including headers.

- For successful authentication, the sender and receiver must specify the same authentication algorithm and authentication key. The authentication algorithm and authentication key are specified automatically.

AH Protocol + ESP Protocol

When combined, the ESP and AH protocols provide secure transmission through both encryption and authentication. These protocols provide header authentication.

- For successful encryption, both the sender and receiver must specify the same encryption algorithm and encryption key. The encryption algorithm and encryption key are specified automatically.
- For successful authentication, the sender and receiver must specify the same authentication algorithm and authentication key. The authentication algorithm and authentication key are specified automatically.

Note

- Some operating systems use the term "Compliance" in place of "Authentication".

Security Association

This machine uses encryption key exchange as the key setting method. With this method, agreements such as the IPsec algorithm and key must be specified for both sender and receiver. Such agreements form what is known as an SA (Security Association). IPsec communication is possible only if the receiver's and sender's SA settings are identical.

The SA settings are auto configured on both parties' machines. However, before the IPsec SA can be established, the ISAKMP SA (Phase 1) settings must be auto configured. When this is done, the IPsec SA (Phase 2) settings, which allow actual IPsec transmission, will be auto configured.

Also, for further security, the SA can be periodically auto updated by applying a validity period (time limit) for its settings. This machine only supports IKEv1 for encryption key exchange.

Multiple settings can be configured in the SA.

Settings 1-10

You can configure ten separate sets of SA details (such as different shared keys and IPsec algorithms).

IPsec policies are searched through one by one, starting at [No.1].

Encryption Key Exchange Settings Configuration Flow

This section explains the procedure for specifying encryption key exchange settings.

Machine	PC
1. Set the IPsec settings on Web Image Monitor.	1. Set the same IPsec settings as the machine on PC.
2. Enable IPsec settings.	2. Enable IPsec settings.
3. Confirm IPsec transmission.	

Note

- After configuring IPsec, you can use "ping" command to check if the connection is established correctly. Because the response is slow during initial key exchange, it may take some time to confirm that transmission has been established.
- If you cannot access Web Image Monitor due to IPsec configuration problems, disable IPsec on the control panel, and then access Web Image Monitor.
- For details about disabling IPsec using the control panel, see page 159 "Network Settings".

Specifying Encryption Key Exchange Settings

1. **Start the Web browser, and access the machine by entering its IP address.**
2. **Click [IPsec Settings].**
3. **Click the [IPsec Policy List] tab.**
4. **Select the number of the setting you want to modify in the list, and then click [Change].**
5. **Modify the IPsec related settings as necessary.**
6. **Enter the administrator password, and then click [Apply].**
7. **Click the [IPsec Global Settings] tab, and then select [Active] in [IPsec Function].**
8. **If necessary, specify [Default Policy], [Broadcast and Multicast Bypass], and [All ICMP Bypass] also.**
9. **Enter the administrator password, and then click [Apply].**

Specifying IPsec Settings on the Computer

Specify exactly the same settings for IPsec SA settings on your computer as are specified for the IPsec Settings on the machine. Setting methods differ according to the computer's operating system. The following procedure is based on Windows 7 in an IPv4 environment as an example.

1. **On the [Start] menu, click [Control Panel], [System and Security], and then click [Administrative Tools].**

2. **Double-click [Local Security Policy], and then click [IP Security Policies on Local Computer].**
3. **In the "Action" menu, click [Create IP Security Policy...].**

   The IP Security Policy Wizard appears.
4. **Click [Next].**
5. **Enter a security policy name in "Name", and then click [Next].**
6. **Clear the "Activate the default response rule (earlier versions of Windows only)." check box, and then click [Next].**
7. **Select "Edit properties", and then click [Finish].**
8. **In the "General" tab, click [Settings...].**
9. **In "Authenticate and generate a new key after every", enter the same validity period (in minutes) that is specified on the machine in [IKE Life Time], and then click [Methods...].**
10. **Confirm that the Encryption Algorithm ("Encryption"), Hash Algorithm ("Integrity"), and IKE Diffie-Hellman Group ("Diffie-Hellman Group") settings in "Security method preference order" all match those specified on the machine in [IKE Settings].**

    If the settings are not displayed, click [Add...].
11. **Click [OK] twice.**
12. **Click [Add...] in the "Rules" tab.**

    The Security Rule Wizard appears.
13. **Click [Next].**
14. **Select "This rule does not specify a tunnel", and then click [Next].**
15. **Select the type of network for IPsec, and then click [Next].**
16. **Click [Add...] in the IP Filter List.**
17. **In [Name], enter an IP Filter name, and then click [Add...].**

    The IP Filter Wizard appears.
18. **Click [Next].**
19. **In [Description:], enter a name or a detailed explanation of the IP filter, and then click [Next].**

    You may click [Next] and proceed to the next step without entering any information in this field.
20. **Select "My IP Address" in "Source address", and then click [Next].**
21. **Select "A specific IP Address or Subnet" in "Destination address", enter the machine's IP address, and then click [Next].**
22. **For the IPsec protocol type, select "Any", and then click [Next].**
23. **Click [Finish], and then click [OK].**
24. **Select the IP filter that you have just created, and then click [Next].**

25. **Click [Add...] in the Filter Action.**

    The Filter Action Wizard appears.

26. **Click [Next].**
27. **In [Name], enter a Filter Action name, and then click [Next].**
28. **Select "Negotiate security", and then click [Next].**
29. **Select one of options for computers allowed to communicate with, and then click [Next].**
30. **Select "Custom" and click [Settings...].**
31. **When [ESP] is selected for the machine in [Security Protocol] under [IPsec Settings], select [Data integrity and encryption (ESP)], and configure the following settings:**

    Set the value of [Integrity algorithm] to the same value as the [Authentication Algorithm for ESP] specified on the machine.

    Set the value of [Encryption algorithm] to the same value as the [Encryption Algorithm for ESP] specified on the machine.

32. **When [AH] is selected for the machine in [Security Protocol] under [IPsec Settings], select [Data and address integrity without encryption (AH)], and configure the following settings:**

    Set the value of [Integrity algorithm] to the same value as the [Authentication Algorithm for AH] specified on the machine.

    Clear the [Data integrity and encryption (ESP)] check box.

33. **When [ESP&AH] is selected for the machine in [Security Protocol] under [IPsec Settings], select [Data and address integrity without encryption (AH)], and configure the following settings:**

    Set the value of [Integrity algorithm] under [Data and address integrity without encryption (AH)] to the same value as [Authentication Algorithm for AH] specified on the machine.

    Set the value of [Encryption algorithm] under [Data integrity and encryption (ESP)] to the same value as [Encryption Algorithm for ESP] specified on the machine.

34. **In the Session key settings, select "Generate a new key every", and enter the same validity period (in seconds or Kbytes) as that specified for [Life Time] on the machine.**
35. **Click [OK], and then click [Next].**
36. **Click [Finish].**

    If you are using IPv6 under Windows Vista or a newer version of Windows, you must repeat this procedure from Step 12 and specify ICMPv6 as an exception. When you reach Step 22, select [58] as the protocol number for the "Other" target protocol type, and then set [Negotiate security] to [Permit].

37. **Select the filter action that you have just created, and then click [Next].**
38. **Select one of options for an authentication method, and then click [Next].**

39. **Click [Finish], and then click [OK] twice.**

    The new IP security policy (IPsec settings) is specified.

40. **Select the security policy that you have just created, right click on it, and then click [Assign].**

    IPsec settings on the computer are enabled.

Note

- To disable the computer's IPsec settings, select the security policy, right click, and then click [Unassign].

Enabling and Disabling IPsec Using the Control Panel

1. **Press the [User Tools] key.**
2. **Press the [▲] or [▼] key to select [Admin. Tools], and then press the [OK] key.**
3. **If you are requested to enter a password, enter the password using the number keys, and then press the [OK] key.**
4. **Press the [▲] or [▼] key to select [IPsec], and then press the [OK] key.**
5. **Press the [▲] or [▼] key to select [Active] or [Inactive], and then press the [OK] key.**
6. **Press the [Clear/Stop] key to return to the initial screen.**

Note

- A password for accessing the [Admin. Tools] menu can be specified in [Admin. Tools Lock]. For details about [Admin. Tools Lock], see page 166 "Administrator Settings".
- You can press the [Escape] key to exit to the previous level of the menu tree.

Notes About the Toner

- Proper operation cannot be guaranteed if any third-party toner is used.
- Depending on printing conditions, there are cases where the printer cannot print the number of sheets indicated in the specifications.
- Replace the print cartridge if the printed image suddenly becomes pale or blurred.
- When operating the machine for the first time, use the print cartridge supplied with this machine. If this cartridge is not initially used, the following problems may occur:
  - "Replace Required Soon:" "Print Cartridge" will be displayed before the toner runs out.
  - "Replacement Required:" "Print Cartridge" will be displayed when the toner runs out, but instead the printed image suddenly becomes pale or blurred.
- The lifetime of the photo conductor, which is built into the print cartridge, is taken into account in displaying "Replace Required Soon:" "Print Cartridge". If the photo conductor stops working before the toner runs out, "Replace Required Soon: Print Cartridge" may be displayed.

Moving and Transporting the Machine

This section provides cautions that you must follow when moving the machine both short and long distances.

Repack the machine in its original packing materials when moving it over a long distance.

Important

- **Be sure to disconnect all cables from the machine before transporting it.**
- **The machine is a precision piece of machinery. Be sure to handle it carefully when moving it.**
- **Make sure to move the machine horizontally. Take extra caution when carrying the machine up or down stairs.**
- **Do not remove the print cartridge when moving the machine.**
- **Be sure to hold the machine level while carrying it. To prevent toner from spilling, move the machine carefully.**

1. **Be sure to check the following points:**
   - The power switch is turned off.
   - The power cord is unplugged from the wall outlet.
   - All other cables are unplugged from the machine.
2. **Return the scanning unit inside the machine to its original position using [Scanner Carriage] under [System Settings]. For details about [Scanner Carriage], see page 147 "System Settings".**
3. **Lift the machine using the inset grips on both sides of the machine, and then move it horizontally to the place where you want to use it.**

Note

- To move the machine over a long distance, pack it well and empty all the paper trays. Take care not to tip or tilt the machine during transit.
- Toner might spill inside the machine if the machine is not kept level during transit.
- For more information about moving the machine, contact your sales or service representative.

Disposal

Ask your sales or service representative for information about correct disposal of this machine.

Where to Inquire

Contact your sales or service representative for further information about the topics included in this manual or to inquire about other topics not included in this manual.

Consumables

Print Cartridge

Print cartridge	Average printable number of pages per cartridge *1
Black	2,000 or 3,500 pages

*1 The printable number of pages is based on pages that are compliant with ISO/IEC 19752 with the image density set as the factory default. ISO/IEC 19752 is an international standard for measurement of printable pages, set by the International Organization for Standardization.

Note

- Unless a print cartridge is replaced before toner runs out, printing will become impossible. To facilitate cartridge replacement, we recommend you purchase and store extra print cartridges.
- The actual number of printable pages varies depending on the image volume and density, number of pages printed at a time, paper type and paper size used, and environmental conditions such as temperature and humidity.
- Print cartridges may need to be changed sooner than indicated above due to deterioration over the period of use.
- Print cartridges are not covered by warranty. However, if there is a problem, contact the store where you purchased them.
- The supplied print cartridge can print approximately 1,000 pages.

Specifications of the Machine

This section lists the machine's specifications.

General Function Specifications

Configuration

Desktop

Print process

Laser electrostatic transfer

Maximum paper size for scanning using the exposure glass

216 mm × 297 mm (8.5 × 11.7 inches)

Maximum paper size for scanning using the ADF

216 mm × 356 mm (8.5 × 14 inches)

Maximum paper size for printing

216 mm × 356 mm (8.5 × 14 inches)

Warm-up time

30 seconds or less (23 °C, 71.6 °F)

Paper sizes

A4, $8^1/_2$" × 11 " (Letter), $8^1/_2$" × 14 " (Legal), B5 JIS, $5^1/_2$" × $8^1/_2$" (Half Letter), $7^1/_4$" × $10^1/_2$" (Executive), A5, A6, B6 JIS, 16K (195 × 267 mm), 8 " × 13 " (F), $8^1/_2$" × 13 " (Foolscap), $8^1/_4$" × 13 " (Folio), Com10 (104.8×241.3 mm), Monarch (98.4 ×190.5 mm), C5 Env (162 ×229 mm), C6 Evn (114 ×162 mm), DL Env (110 ×220 mm), Custom Paper Size

Note

- The following paper sizes are supported as custom paper sizes:
  - Approximately 90-216 mm (3.6-8.5 inches) in width
  - Approximately 148-356 mm (5.8-14 inches) in length

Paper type

Plain paper (65-99 g/m^2 (17-27 lb.)), Recycled paper (75-90 g/m^2 (20-24 lb.)), Thin paper (52-64 g/m^2 (14-16 lb.)), Thick paper 1 (100-130 g/ m^2 (27-35 lb)), Thick paper 2 (131-162 g/ m^2 (35-43 lb)), Color paper (75-90 g/m^2 (20-24 lb.)), Preprinted paper (75-90 g/m^2 (20-24 lb.)), Prepunched paper (75-90 g/m^2 (20-24 lb.)), Letterhead (100-130 g/m^2 (27-35 lb.)), Bond paper (105-160 g/m^2 (28-43 lb.)), Cardstock (100-130 g/m^2 (27-35 lb.)), Label paper (100-130 g/m^2 (27-35 lb.)), Envelope

Paper output capacity (80 g/m^2, 20 lb)

50 sheets

Paper input capacity (80 g/m^2, 20 lb)

- Tray 1

  250 sheets

- Bypass tray

  50 sheets

ADF capacity (80 g/m^2, 20 lb)

35 sheets

Memory

128 MB

Power requirements

- Region A

  220-240 V, 4 A, 50/60 Hz

- Region B

  120 V, 7 A, 60 Hz

Power consumption

- Maximum power consumption

  Region A: 890 W

  Region B: 800 W

- Energy Saver mode 1

  50 W or less

- Energy Saver mode 2

  5.0 W or less

Machine dimensions (Width × Depth × Height)

370 × 392 × 405 mm (14.6 × 15.4 × 15.9 inches)

Weight (machine body with consumables)

Approximately 16.5 kg (36.4 lb.)

Printer Function Specifications

Printing speed

Region A: 28 pages per minute (A4)

Region B: 30 pages per minute (Letter)

Resolution

600 × 600 dpi (maximum: 1200 × 600 dpi)

First print speed

12 seconds or less

Interface

- Ethernet (10BASE-T, 100BASE-TX)
- USB 2.0
- Wi-Fi

Printer language

PCL6c

Fonts

80 fonts

Copier Function Specifications

Maximum resolution (scanning and printing)

- Exposure glass

  Scanning: 600 × 600 dpi

  Printing: 600 × 600 dpi
- ADF

  Scanning: 600 × 300 dpi

  Printing: 600 × 600 dpi

First copy speed (A4, at 23 °C, 71.6 °F)

13 seconds or less

Multiple copy speed (except for Europe)

28 pages per minute

Reproduction ratio

- Region A

  Fixed ratio: 50%, 71%, 82%, 93%, 122%, 141%, 200%, 400%

  Zoom ratio: 25% to 400%
- Region B

  Fixed ratio: 50%, 65%, 78%, 93%, 129%, 155%, 200%, 400%

Zoom ratio: 25% to 400%

Copy quantity

99

Scanner Function Specifications

Maximum scanning area (horizontal × vertical)

- Exposure glass

  216 × 297 mm (8.5 × 11.7 inches)

- ADF

  216 × 356 mm (8.5 × 14 inches)

Maximum resolution when scanning from the control panel (Scan to E-mail, Scan to FTP, Scan to Folder)

600 × 600 dpi

Maximum resolution when scanning from a computer (TWAIN)

- Exposure glass

  600 × 600 dpi

- ADF

  600 × 300 dpi

Maximum resolution when scanning from a computer (WIA)

600 × 600 dpi

ADF throughput

Black and white: 147 mm per second

Color: 49 mm per second

Interface

- Scanning from the control panel

  Ethernet (10BASE-T, 100BASE-TX)

- Scanning from a computer

  Ethernet (10BASE-T, 100BASE-TX), USB 2.0

Fax Function Specifications

Access line

- Public switched telephone networks (PSTN)

- Private branch exchange (PBX)

Transmission mode

ITU-T Group 3 (G3)

Scan line density

8 dots per mm × 3.85 line per mm (200 × 100 dpi)

8 dots per mm × 7.7 line per mm (200 × 200 dpi)

Transmission time

3 seconds (8 dots per mm × 3.85 line per mm, 33.6 kbps, MMR, ITU-T # 1 chart)

Transfer rate

33.6 kbps to 2400 bps (auto shift down system)

Data compression methods

MH, MR, MMR

Memory capacity

100 sheets or more (8 dots per mm × 3.85 line per mm)

Address book

- Speed dial

  200 items
- Quick dial

  8 items
- Number of redials for Fax

  1

Copyright Information about Installed Applications

expat

Copyright (c) 1998, 1999, 2000 Thai Open Source Software Centre, Ltd. and Clark Cooper.

Copyright (c) 2001, 2002 Expat maintainers.

Permission is hereby granted, free of charge, to any person obtaining a copy of this software and associated documentation files (the "Software"), to deal in the Software without restriction, including without limitation the rights to use, copy, modify, merge, publish, distribute, sublicense, and/or sell copies of the Software, and to permit persons to whom the Software is furnished to do so, subject to the following conditions:

The above copyright notice and this permission notice shall be included in all copies or substantial portions of the Software.

THE SOFTWARE IS PROVIDED "AS IS", WITHOUT WARRANTY OF ANY KIND, EXPRESS OR IMPLIED, INCLUDING BUT NOT LIMITED TO THE WARRANTIES OF MERCHANTABILITY, FITNESS FOR A PARTICULAR PURPOSE AND NONINFRINGEMENT. IN NO EVENT SHALL THE AUTHORS OR COPYRIGHT HOLDERS BE LIABLE FOR ANY CLAIM, DAMAGES OR OTHER LIABILITY, WHETHER IN AN ACTION OF CONTRACT, TORT OR OTHERWISE, ARISING FROM, OUT OF OR IN CONNECTION WITH THE SOFTWARE OR THE USE OR OTHER DEALINGS IN THE SOFTWARE.

JPEG LIBRARY

- The software installed on this product is based in part on the work of the Independent JPEG Group.

OpenLDAP 2.1

http://www.openldap.org/software/download

The OpenLDAP Public License

Version 2.8, 17 August 2003

Redistribution and use of this software and associated documentation ("Software"), with or without modification, are permitted provided that the following conditions are met:

1. Redistributions in source form must retain copyright statements and notices,
2. Redistributions in binary form must reproduce applicable copyright statements and notices, this list of conditions, and the following disclaimer in the documentation and/or other materials provided with the distribution, and

3. Redistributions must contain a verbatim copy of this document.

The OpenLDAP Foundation may revise this license from time to time.

Each revision is distinguished by a version number. You may use this Software under terms of this license revision or under the terms of any subsequent revision of the license.

THIS SOFTWARE IS PROVIDED BY THE OPENLDAP FOUNDATION AND ITS CONTRIBUTORS "AS IS" AND ANY EXPRESSED OR IMPLIED WARRANTIES, INCLUDING, BUT NOT LIMITED TO, THE IMPLIED WARRANTIES OF MERCHANTABILITY AND FITNESS FOR A PARTICULAR PURPOSE ARE DISCLAIMED. IN NO EVENT SHALL THE OPENLDAP FOUNDATION, ITS CONTRIBUTORS, OR THE AUTHOR(S) OR OWNER(S) OF THE SOFTWARE BE LIABLE FOR ANY DIRECT, INDIRECT, INCIDENTAL, SPECIAL, EXEMPLARY, OR CONSEQUENTIAL DAMAGES (INCLUDING, BUT NOT LIMITED TO, PROCUREMENT OF SUBSTITUTE GOODS OR SERVICES; LOSS OF USE, DATA, OR PROFITS; OR BUSINESS INTERRUPTION) HOWEVER CAUSED AND ON ANY THEORY OF LIABILITY, WHETHER IN CONTRACT, STRICT LIABILITY, OR TORT (INCLUDING NEGLIGENCE OR OTHERWISE) ARISING IN ANY WAY OUT OF THE USE OF THIS SOFTWARE, EVEN IF ADVISED OF THE POSSIBILITY OF SUCH DAMAGE.

The names of the authors and copyright holders must not be used in advertising or otherwise to promote the sale, use or other dealing in this Software without specific, written prior permission. Title to copyright in this Software shall at all times remain with copyright holders.

OpenLDAP is a registered trademark of the OpenLDAP Foundation.

Copyright 1999-2003 The OpenLDAP Foundation, Redwood City, California, USA.

All Rights Reserved.

Permission to copy and distribute verbatim copies of this document is granted.

OpenSSL 0.9.8g

http://www.openssl.org/source

LICENSE ISSUES

The OpenSSL toolkit stays under a dual license, i.e. both the conditions of the OpenSSL License and the original SSLeay license apply to the toolkit. See below for the actual license texts. Actually both licenses are BSD-style Open Source licenses. In case of any license issues related to OpenSSL please contact openssl-core@openssl.org.

OpenSSL License

Copyright (c) 1998-2011 The OpenSSL Project. All rights reserved.

Redistribution and use in source and binary forms, with or without modification, are permitted provided that the following conditions are met:

1. Redistributions of source code must retain the above copyright notice, this list of conditions and the following disclaimer.

2. Redistributions in binary form must reproduce the above copyright notice, this list of conditions and the following disclaimer in the documentation and/or other materials provided with the distribution.
3. All advertising materials mentioning features or use of this software must display the following acknowledgment:

   "This product includes software developed by the OpenSSL Project for use in the OpenSSL Toolkit. (http://www.openssl.org/)"
4. The names "OpenSSL Toolkit" and "OpenSSL Project" must not be used to endorse or promote products derived from this software without prior written permission. For written permission, please contact openssl-core@openssl.org.
5. Products derived from this software may not be called "OpenSSL" nor may "OpenSSL" appear in their names without prior written permission of the OpenSSL Project.
6. Redistributions of any form whatsoever must retain the following acknowledgment:

   "This product includes software developed by the OpenSSL Project for use in the OpenSSL Toolkit (http://www.openssl.org/)"

THIS SOFTWARE IS PROVIDED BY THE OpenSSL PROJECT “AS IS” AND ANY EXPRESSED OR IMPLIED WARRANTIES, INCLUDING, BUT NOT LIMITED TO, THE IMPLIED WARRANTIES OF MERCHANTABILITY AND FITNESS FOR A PARTICULAR PURPOSE ARE DISCLAIMED. IN NO EVENT SHALL THE OpenSSL PROJECT OR ITS CONTRIBUTORS BE LIABLE FOR ANY DIRECT, INDIRECT, INCIDENTAL, SPECIAL, EXEMPLARY, OR CONSEQUENTIAL DAMAGES (INCLUDING, BUT NOT LIMITED TO, PROCUREMENT OF SUBSTITUTE GOODS OR SERVICES; LOSS OF USE, DATA, OR PROFITS; OR BUSINESS INTERRUPTION) HOWEVER CAUSED AND ON ANY THEORY OF LIABILITY, WHETHER IN CONTRACT, STRICT LIABILITY, OR TORT (INCLUDING NEGLIGENCE OR OTHERWISE) ARISING IN ANY WAY OUT OF THE USE OF THIS SOFTWARE, EVEN IF ADVISED OF THE POSSIBILITY OF SUCH DAMAGE.

This product includes cryptographic software written by Eric Young (eay@cryptsoft.com).

This product includes software written by Tim Hudson (tjh@cryptsoft.com).

Original SSLeay License

Copyright (C) 1995-1998 Eric Young (eay@cryptsoft.com)

All rights reserved.

This package is an SSL implementation written by Eric Young (eay@cryptsoft.com).

The implementation was written so as to conform with Netscapes SSL.

This library is free for commercial and non-commercial use as long as the following conditions are aheared to. The following conditions apply to all code found in this distribution, be it the RC4, RSA, lhash, DES, etc., code; not just the SSL code. The SSL documentation included with this distribution is covered by the same copyright terms except that the holder is Tim Hudson (tjh@cryptsoft.com).

Copyright remains Eric Young's, and as such any Copyright notices in the code are not to be removed.

If this package is used in a product, Eric Young should be given attribution as the author of the parts of the library used.

This can be in the form of a textual message at program startup or in documentation (online or textual) provided with the package.

Redistribution and use in source and binary forms, with or without modification, are permitted provided that the following conditions are met:

1. Redistributions of source code must retain the copyright notice, this list of conditions and the following disclaimer.
2. Redistributions in binary form must reproduce the above copyright notice, this list of conditions and the following disclaimer in the documentation and/or other materials provided with the distribution.
3. All advertising materials mentioning features or use of this software must display the following acknowledgement:

   "This product includes cryptographic software written by Eric Young (eay@cryptsoft.com)"

   The word 'cryptographic' can be left out if the rouines from the library being used are not cryptographic related :-).
4. If you include any Windows specific code (or a derivative thereof) from the apps directory (application code) you must include an acknowledgement:

   "This product includes software written by Tim Hudson (tjh@cryptsoft.com)"

THIS SOFTWARE IS PROVIDED BY ERIC YOUNG “AS IS” AND ANY EXPRESS OR IMPLIED WARRANTIES, INCLUDING, BUT NOT LIMITED TO, THE IMPLIED WARRANTIES OF MERCHANTABILITY AND FITNESS FOR A PARTICULAR PURPOSE ARE DISCLAIMED. IN NO EVENT SHALL THE AUTHOR OR CONTRIBUTORS BE LIABLE FOR ANY DIRECT, INDIRECT, INCIDENTAL, SPECIAL, EXEMPLARY, OR CONSEQUENTIAL DAMAGES (INCLUDING, BUT NOT LIMITED TO, PROCUREMENT OF SUBSTITUTE GOODS OR SERVICES; LOSS OF USE, DATA, OR PROFITS; OR BUSINESS INTERRUPTION) HOWEVER CAUSED AND ON ANY THEORY OF LIABILITY, WHETHER IN CONTRACT, STRICT LIABILITY, OR TORT (INCLUDING NEGLIGENCE OR OTHERWISE) ARISING IN ANY WAY OUT OF THE USE OF THIS SOFTWARE, EVEN IF ADVISED OF THE POSSIBILITY OF SUCH DAMAGE.

The licence and distribution terms for any publically available version or derivative of this code cannot be changed. i.e. this code cannot simply be copied and put under another distribution licence [including the GNU Public Licence.]

Trademarks

Adobe, Acrobat, and Reader are either registered trademarks or trademarks of Adobe Systems Incorporated in the United States and/or other countries.

TrueType, and Safari are trademarks of Apple Inc., registered in the U.S. and other countries.

Firefox® is a registered trademark of the Mozilla Foundation.

Java is a registered trademark of Oracle and/or its affiliates.

LINUX® is the registered trademark of Linus Torvalds in the U.S. and other countries.

Microsoft®, Windows®, Windows Server®, Windows Vista®, and Internet Explorer® are either registered trademarks or trademarks of Microsoft Corporation in the United States and/or other countries.

PCL® is a registered trademark of Hewlett-Packard Company.

Red Hat is a registered trademark of Red Hat, Inc.

Other product names used herein are for identification purposes only and might be trademarks of their respective companies. We disclaim any and all rights to those marks.

The proper name of Internet Explorer 6 is Microsoft® Internet Explorer® 6.

The proper names of the Windows operating systems are as follows:

- The product names of Windows XP are as follows:

  Microsoft® Windows® XP Professional

  Microsoft® Windows® XP Home Edition

  Microsoft® Windows® XP Professional x64 Edition
- The product names of Windows Vista are as follows:

  Microsoft® Windows Vista® Ultimate

  Microsoft® Windows Vista® Business

  Microsoft® Windows Vista® Home Premium

  Microsoft® Windows Vista® Home Basic

  Microsoft® Windows Vista® Enterprise
- The product names of Windows 7 are as follows:

  Microsoft® Windows® 7 Starter

  Microsoft® Windows® 7 Home Premium

  Microsoft® Windows® 7 Professional

  Microsoft® Windows® 7 Ultimate

  Microsoft® Windows® 7 Enterprise
- The product names of Windows 8 are as follows:

Microsoft® Windows® 8

Microsoft® Windows® 8 Pro

Microsoft® Windows® 8 Enterprise

- The product names of Windows Server 2003 are as follows:

  Microsoft® Windows Server® 2003 Standard Edition

  Microsoft® Windows Server® 2003 Enterprise Edition

  Microsoft® Windows Server® 2003 Web Edition

  Microsoft® Windows Server® 2003 Datacenter Edition

- The product names of Windows Server 2003 R2 are as follows:

  Microsoft® Windows Server® 2003 R2 Standard Edition

  Microsoft® Windows Server® 2003 R2 Enterprise Edition

  Microsoft® Windows Server® 2003 R2 Datacenter Edition

- The product names of Windows Server 2008 are as follows:

  Microsoft® Windows Server® 2008 Foundation

  Microsoft® Windows Server® 2008 Standard

  Microsoft® Windows Server® 2008 Enterprise

  Microsoft® Windows Server® 2008 Datacenter

  Microsoft® Windows Server® 2008 for Itanium-based Systems

  Microsoft® Windows® Web Server 2008

  Microsoft® Windows® HPC Server 2008

- The product names of Windows Server 2008 R2 are as follows:

  Microsoft® Windows Server® 2008 R2 Foundation

  Microsoft® Windows Server® 2008 R2 Standard

  Microsoft® Windows Server® 2008 R2 Enterprise

  Microsoft® Windows Server® 2008 R2 Datacenter

  Microsoft® Windows Server® 2008 R2 for Itanium-based Systems

  Microsoft® Windows® Web Server R2 2008

  Microsoft® Windows® HPC Server R2 2008

- The product names of Windows Server 2012 are as follows:

  Microsoft® Windows Server® 2012 Foundation

  Microsoft® Windows Server® 2012 Essentials

  Microsoft® Windows Server® 2012 Standard

  Microsoft® Windows Server® 2012 Datacenter

INDEX

A

Address book....82, 146
Address book (LAN-Fax)....123, 124, 125
ADF (Auto Document Feeder)....51
Administrator password....197
Administrator settings....166, 197
Authentication....242
Auto e-mail notification settings....186

B

Backup settings....198
Basic operation....55, 64, 89, 131
Broadcast function....114
Bypass tray setting priority....177

C

Canceling a copy....65
Canceling a fax....111, 122
Cleaning....205, 206, 208
Combine copy....69
Community....187
Configuration page....153, 196
Consumables....251
Control panel....21
Copier features....134
Copier function....254
Copier mode screen....63
Copy key....32
Copyright information....257
Counter information....175

D

Date....100
Date and time settings....199
Date setting....199
Default settings....197
Delete....29
Density....94
Disclaimer....8
DNS setting....185
Driver....28

E

E-mail notification 1....186
E-mail notification 2....186
Encryption....242
Encryption key exchange....243, 244
Energy saver mode....16, 200
Enlarged or reduced copies....67
Entering characters....101
Error messages....232
expat....257
Exposure glass....208
Exterior....19

F

Facsimile key....32
Fax destinations....103, 105, 106, 182
Fax features....142
Fax function....255
Fax journal....153, 196
Fax mode screen....99
Fax Speed Dial destination list....153, 196
Fax transmission settings....140
Fax TX standby file list....196
FAX/TEL manual mode....128
Function priority....32

G

General status....183

I

I/O timeout....181
ID Card copy....74
IKE settings....192
Image density....78, 118
Immediate transmission....108
Initial setup....31
Install....28
Installing the printer....24
Interior....21
Introduction....8
IPsec global settings....192
IPsec policy settings....192
IPsec settings....192
IPsec transmission....242
IPv6 configuration....184
IPv6 environment....241

J

Job cancel....55
JPEG LIBRARY....257

L

LAN-Fax....121
Language....173
Legal prohibition....8
Lists....130, 153, 196
Loading paper....41

M

Machine information....176
Maintenance page....153, 196
mDNS setting....184
Memory transmission....108
Menu chart....133
Models....10
Moving....249
Multi-access....32

N

Network application....184
Network print setting....184
Network settings....159, 183
Network status....183
Non-recommended paper....37
Notes....248

O

On hook dial....116
One Touch buttons....91
OpenLDAP....257
OpenSSL....258
Operation modes....32
Operation tools....30
Original....51
Original type....78

P

Page counter....175
Paper jam....213, 215, 217, 221
Paper mismatch....57
Paper recommendations....51
Paper tray....174
Pause/Redial key....91
Placing originals....53
POP3 settings....189
Print area....38
Print cartridge....201, 251
Print counter....175
Print functions....59
Print output functions....60
Print quality functions....59
Printer features....155
Printer function....253
Priority tray....180

Q

Quick Dial destination list....153, 196
Quick install for network....28
Quick install for usb....28

R

Receiving a fax....127
Reception mode....127
Redial function....115
Reports....130, 153, 196
Reset settings....197
Resolution....94, 119
Restore settings....199

S

SA (Security Association)....243
Scan destinations....82, 87, 88, 91, 182
Scan size....93
Scan to E-mail....82, 89
Scan to Folder....82, 89
Scan to FTP....82, 89
Scanner destination list....153, 196
Scanner Features Settings....138
Scanner function....255
Scanner journal....153, 196
Scanner key....32
Scanner send setting....184
Scanning....96
Select paper....179
Sending a fax....108, 109

Set date.....199
Set time.....199
Shortcut to Func. key.....181
Shortcut to function.....181
Smart Organizing Monitor.....30
SMTP settings.....188
SNMP settings.....187
Software.....28
Sound volume adjustment.....177
Specifications.....252, 253, 254, 255
Speed Dial.....105, 106, 113
Status information.....174
Status messages.....232
Supported paper.....35
System.....187
System information.....174
System settings.....147, 177

T

TCP/IP status.....183
Time.....100
Time setting.....199
Toner.....201, 248
Toner management.....180
Top page.....172
Trademarks.....261
Transmission mode.....108
Trap.....187
Tray 1.....41
Tray paper settings.....147, 177
Troubleshooting.....209, 211, 223, 224, 225, 226, 228, 229, 232
TWAIN.....96
TX standby file list.....153

U

Upgrade.....29

W

Web Image Monitor.....171
Where to put the printer.....24
Wi-Fi settings.....159
WIA.....98
Wireless LAN settings.....162, 189
Wireless settings.....189

MEMO

MEMO

MEMO

© 2013