SP 330DN/3710DN

User's Guide

Guide to the Machine 1

Paper Specifications and Adding Paper 2

Printing Documents 3

Configuring the Machine Using the Control Panel 4

Configuring the Machine Using Utilities 5

Maintaining the Machine 6

Troubleshooting 7

Configuring Network Settings Using OS X 8

Appendix 9

For safe and correct use, be sure to read Safety Information before using the machine.

TABLE OF CONTENTS

How to Find Information about Operations and Troubleshooting..... 7
Operating Manual (Printed)..... 7
Operating Manual (Digital Format)..... 7
How to Read This Manual..... 9
Introduction..... 9
Symbols Used in This Manual..... 9
Model-Specific Information..... 9
Disclaimer..... 10
Notes..... 10
Note to Administrator..... 11
List of Option..... 11
About IP Address..... 11

1. Guide to the Machine

Guide to Components..... 13
Exterior..... 13
Interior..... 15
Control Panel..... 15
Installing Option..... 18
Attaching Paper Feed Unit..... 18
Installing the Wireless LAN Interface Board..... 20
About Operation Tools..... 22
Using RICOH Smart Device Connector..... 24
Connecting a Smart Device to the Machine Using NFC..... 25
Writing the Machine's Information to the NFC tag with a Smart Device..... 25
Using the Application on a Smart Device by Using NFC..... 25

2. Paper Specifications and Adding Paper

Workflow for Loading Paper and Configuring Paper Sizes and Types..... 27
Loading Paper..... 28
Loading Paper into Tray1 and 2..... 28
Loading Paper into Bypass Tray..... 32
Loading Envelopes..... 34
Specifying Paper Type and Paper Size Using the Control Panel..... 37
Specifying the Paper Type..... 37

Specifying the Standard Paper Size....38
Specifying a Custom Paper Size.... 38
Specifying Paper Type and Paper Size Using Smart Organizing Monitor....40
Specifying a Custom Paper Size.... 41
Specifying Paper Type and Paper Size Using Web Image Monitor....42
Specifying a Custom Paper Size.... 42
Specifying Paper Type and Paper Size Using the Printer Driver....43
When Using Windows.... 43
When Using OS X....44
Supported Paper.... 45
Specifications of Paper Types....48
Non-Recommended Paper Types.... 54
Paper Storage.... 55
Print Area.... 55

3. Printing Documents

What You Can Do with the Printer Function....57
Configuring Option Settings for the Printer.... 58
Conditions for Bidirectional Communication....58
If Bidirectional Communication is Disabled.... 58
Displaying the Printing Preferences Dialog Box....60
Displaying the Printing Preferences Dialog Box from the [Start] Menu.... 60
Displaying the Printing Preferences Dialog Box in an Application.... 60
Basic Operation of Printing.... 62
If a Paper Mismatch Occurs.... 63
Canceling a Print Job....64
Printing Confidential Documents.... 66
Storing a Locked Print file....66
Printing a Locked Print File....67
Deleting a Locked Print File.... 67
Printing with Mopria....68
Using Various Print Functions....69
Print Quality Functions.... 69
Print Output Functions....70

4. Configuring the Machine Using the Control Panel

Basic Operation..... 73

Menu Chart..... 74

Administrator Tools Menu..... 75

Printer Features Menu..... 77

- List/Test Print..... 77
- System..... 77

System Settings Menu..... 81

Tray Paper Settings Menu..... 84

Wi-Fi Setup Wizard..... 86

Network Settings Menu..... 87

List/Test Print Menu..... 91

- Printing the Configuration Page..... 91
- Types of Lists/Reports..... 91

5. Configuring the Machine Using Utilities

Available Setting Functions Using Web Image Monitor and Smart Organizing Monitor..... 93

Using Web Image Monitor..... 94

Displaying Top Page..... 95

- Changing the Interface Language..... 96
- Installing the Help Source File..... 96
- Displaying Help..... 96

Checking the System Information..... 98

- Status Tab..... 98
- Counter Tab..... 99
- Machine Information Tab..... 99

Configuring the System Settings..... 100

- Tray Paper Settings Tab..... 100
- Interface Tab..... 103

Configuring the Network Settings..... 104

- Network Status Tab..... 104
- IPv6 Configuration Tab..... 105
- Network Application Tab..... 105
- DNS Tab..... 106

Auto E-mail Notification Tab..... 107
SNMP Tab..... 108
SMTP Tab..... 109
POP3 Tab..... 109
Wireless Tab..... 110
Google Cloud Tab..... 112
Airprint Tab..... 112
Certificate Tab..... 113
Configuring the IPsec Settings..... 116
IPsec Global Settings Tab..... 116
IPsec Policy List Tab..... 116
Printing Lists/Reports..... 120
Configuring the Administrator Settings..... 121
Administrator Tab..... 121
Reset Settings Tab..... 121
Backup Setting Tab..... 121
Restore Setting Tab..... 122
Help Source File Setting Tab..... 123
Energy Saver Mode Tab..... 123
PCL6 Mode..... 124
Using Smart Organizing Monitor..... 125
Displaying the Smart Organizing Monitor Dialog..... 125
Checking the Status Information..... 125
Configuring the Machine Settings..... 126
Printing the Configuration Page..... 128

6. Maintaining the Machine

Replacing the Print Cartridge..... 129
Cautions When Cleaning..... 133
Cleaning the Friction Pad and Paper Feed Roller..... 134
Moving and Transporting the Machine..... 137
Disposal..... 138
Where to Inquire..... 138

7. Troubleshooting

Error and Status Messages on the Control Panel....139
Panel Indicator....142
Error and Status Messages Appear on Smart Organizing Monitor....143
Removing Paper Jams....145
Removing Printing Jams....145
When You Cannot Print Test Page....155
Paper Feed Problems....156
Print Quality Problems....159
Checking the Condition of the Machine....159
Checking the Printer Driver Settings....160
Printer Problems....162
When You Cannot Print Properly....162
When You Cannot Print Clearly....164
When Paper Is Not Fed or Ejected Properly....166
Other Printing Problems....167
Common Problems....168

8. Configuring Network Settings Using OS X

Connecting the Machine to a Wired Network....169
Using a USB Cable....169
Using an Ethernet Cable....170
Connecting the Machine to a Wireless Network....172
Installing the Printer Driver....172
Installing Smart Organizing Monitor....172
Using the Wi-Fi Setup Wizard....173
Using the WPS Button....174
Using a PIN Code....175

9. Appendix

Transmission Using IPsec....177
Encryption and Authentication by IPsec....177
Security Association....178
Encryption Key Exchange Settings Configuration Flow....179
Specifying Encryption Key Exchange Settings....179

Specifying IPsec Settings on the Computer..... 180
Enabling and Disabling IPsec Using the Control Panel..... 182
Notes About the Toner..... 183
Specifications of the Machine..... 184
General Function Specifications..... 184
Printer Function Specifications..... 186
Paper Feed Unit PB1130..... 186
Consumables..... 187
Print Cartridge..... 187
Information for This Machine..... 188
User Information on Electrical & Electronic Equipment Region A (mainly Europe and Asia)..... 188
Note for the Battery and/or Accumulator Symbol (For EU countries only)..... 189
Environmental Advice for Users Region A (mainly Europe)..... 189
Notice To Wireless LAN Interface Users Region A (mainly Europe)..... 190
Notes to users in the state of California (Notes to Users in USA)..... 191
Notes to users in the United States of America..... 191
Notes to Canadian Users of Wireless Devices..... 192
ENERGY STAR Program..... 193
Saving Energy..... 193
Trademarks..... 195
INDEX..... 199

How to Find Information about Operations and Troubleshooting

You can find support information about operating the machine and troubleshooting in the Operating Manual (printed), Operating Manual (digital format), and Help (online).

Operating Manual (Printed)

The following manuals are provided with this machine.

Safety Information

This manual explains the safety precautions that should be followed when using the machine. Be sure to read this manual before using the machine.

Setup Guide

This manual explains how to set up the machine. It also explains how to remove the machine from the packaging and how to connect it to a computer.

Operating Manual (Digital Format)

Operating manuals can be viewed from Ricoh's website or from the provided CD-ROM.

Viewing from a web browser

Access the Internet from a web browser.

Confirm that the computer or the machine is connected to the network.

Download the operating manuals from http://www.ricoh.com/.

Viewing from the provided CD-ROM

Operating manuals can also be viewed from the provided CD-ROM.

- When using Windows
  1. **Insert the CD-ROM into the CD-ROM drive.**
  2. **Click [Read Manual] and follow the instructions on the screen.**

     The PDF file manual opens.
- When using OS X
  1. **Insert the CD-ROM into the CD-ROM drive.**
  2. **Double-click Manuals.htm file, located on the CD-ROM root directory.**
  3. **Select the language.**
  4. **Click [Read PDF manuals].**

5. **Click the manual you want to refer to.**

   The PDF file manual opens.

How to Read This Manual

Introduction

This manual contains detailed instructions and notes on the operation and use of this machine. For your safety and benefit, read this manual carefully before using the machine. Keep this manual in a handy place for quick reference.

Symbols Used in This Manual

This manual uses the following symbols:

Important

Indicates points to pay attention to when using the machine, and explanations of likely causes of paper misfeeds, damage to originals, or loss of data. Be sure to read these explanations.

Note

Indicates supplementary explanations of the machine's functions, and instructions on resolving user errors.

[ ]

Indicates the names of keys on the machine's display or control panels.

Model-Specific Information

This section explains how you can identify the region your machine belongs to.

There is a label on the rear of the machine, located in the position shown below. The label contains details that identify the region your machine belongs to. Read the label.

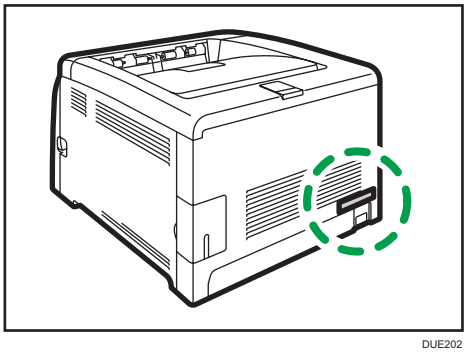

DUE202

The following information is region-specific. Read the information under the symbol that corresponds to the region of your machine.

Region A (mainly Europe and Asia)

If the label contains the following, your machine is a region A model:

- CODE XXXX -27
- 220–240 V

Region B (mainly North America)

If the label contains the following, your machine is a region B model:

- CODE XXXX -17
- 120–127 V

Note

- Dimensions in this manual are given in two units of measure: metric and inch. If your machine is a Region A model, refer to the metric units. If your machine is a Region B model, refer to the inch units.

Disclaimer

To the maximum extent permitted by applicable laws, in no event will the manufacturer be liable for any damages whatsoever arising out of failures of this machine, losses of the registered data, or the use or non-use of this product and operation manuals provided with it.

Make sure that you always copy or have backups of the data registered in this machine. Documents or data might be erased due to your operational errors or malfunctions of the machine.

In no event will the manufacturer be responsible for any documents created by you using this machine or any results from the data executed by you.

For good output quality, the manufacturer recommends that you use genuine toner from the manufacturer.

Notes

Contents of this manual are subject to change without prior notice.

The manufacturer shall not be responsible for any damage or expense that might result from the use of parts other than genuine parts from the manufacturer with your office products.

Two kinds of size notation are employed in this manual.

Some illustrations in this manual might be slightly different from the machine.

Note to Administrator

Password

Certain configurations of this machine can be password-protected to prevent unauthorized modifications by others. We strongly recommend you to create your own password immediately.

The following are the operations that can be password-protected:

- Entering the [Network Settings], [Wi-Fi Setup Wizard], or [Admin. Tools] menu using the control panel

  You can access these menus without a password by factory default.

  The setting for creating a password can be found in [Admin. Tools].

- Configuring the machine using Web Image Monitor

  You can configure the machine using Web Image Monitor without a password by factory default.

  The setting for creating a password can be found in [Administrator Settings].

  For details about creating passwords, see page 121 "Configuring the Administrator Settings".

List of Option

Option List	Referred to as
Paper Feed Unit PB1130	Paper feed unit
xxxx	Wireless LAN interface board

Note

- If Paper feed unit is attached, "Tray 2" appears on the machine's control panel.

About IP Address

In this manual, "IP address" covers both IPv4 and IPv6 environments. Read the instructions that are relevant to the environment you are using.

1. Guide to the Machine

This chapter describes preparations for using the machine and its operating instructions.

Guide to Components

This section introduces the names of the various parts on the front and rear side of the machine and outlines their functions.

Exterior

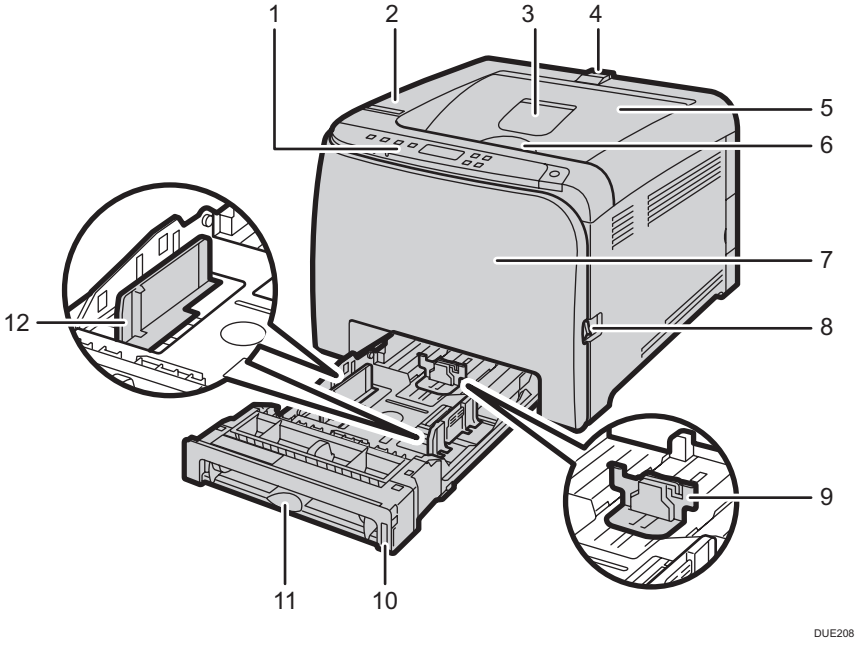

No.	Name	Description
1	Stop Fence	Raise this fence to prevent paper from falling off.
2	Standard Tray	Printed paper is output here. Up to 125 sheets of plain paper can be stacked here.
3	Controller Board	For connecting the wireless LAN interface board.
4	USB Port	Use a USB cable to connect the printer to the host computer.

No.	Name	Description
5	Ethernet Port	Use a network interface cable to connect the printer to the network.
6	Tray 1 Rear Cover	This cover opens when you load paper longer than A4 in Tray 1
7	Rear Cover	Open this cover to remove jammed paper or to lower the levers inside before printing on envelopes.
8	Side Fence	Adjust this fence to the paper size.
9	Bypass Tray	This tray can hold up to 50 sheets of plain paper.
10	Tray 1	This tray can hold up to 250 sheets of plain paper.
11	End Fence	Adjust this fence to the paper size.
12	Front Cover	Open this cover to replace consumables or clear a paper jam.
13	Control Panel	The keys to operate the machine and the indicators for checking the status of the machine are on this control panel.

Interior

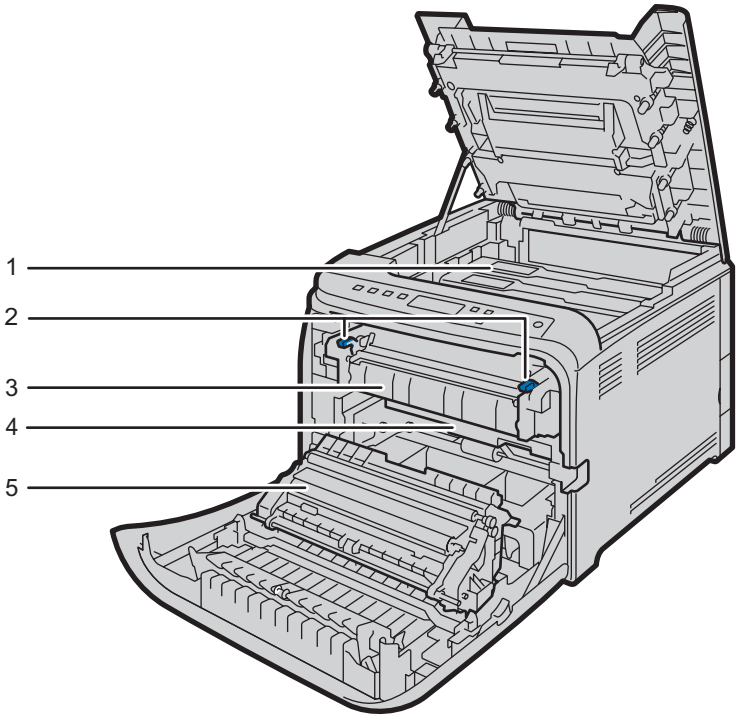

DUE213

No.	Name	Description
1	Print Cartridge	A replacement consumable that is required to make prints on paper. It needs to be replaced when the alert indicator flashes red. For details about replacing the cartridge, see page 129 "Replacing the Print Cartridge".
2	Envelope Levers	Lower these levers when copying or printing on envelopes. Pull up these levers back when copying or printing on paper other than envelopes.

Control Panel

Important

- When you push the [Power] key, wait at least a second after the indicator has lit up or gone out.

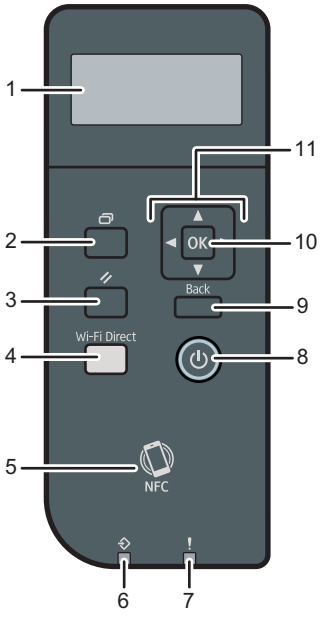

DYG319

No.	Name	Description
1	Display	Displays the current status and messages.
2	[Menu] key	Press this key to configure or check the machine settings. Press the [Menu] key again to return to the initial screen. Also, you can use this key to enter numerical values when specifying settings.
3	[Job Reset] key	Press this key to cancel a job that is currently being printed or received.
4	[Wi-Fi Direct] key	Pressing this key while Wi-Fi is disabled activates Wi-Fi and reboots the machine automatically. Press this key while Wi-Fi is enabled to activate or deactivate the Wi-Fi Direct function. This indicator lights up blue when the Wi-Fi Direct function is active. After a long press of this key, configure the WPS using the PIN code or in PBC mode. For details, see Setup Guide. To use this key, the wireless LAN interface board needs to be installed to the machine.

No.	Name	Description
5	NFC tag	Connects a smart device to the machine when you touch this tag on a smart device.
6	Data In Indicator	Flashes when the machine is receiving data from a computer. This indicator lights up when there is a Locked Print file stored in the machine.
7	Alert Indicator	Flashes when the toner is nearly empty, or lights up red when the machine runs out of toner or a machine error occurs.
8	[Power] key	Press to turn the main power on or off. This indicator lights up blue when the machine is turned on. To turn off the machine, press and hold down this key for at least three seconds. If you press this key for less than 3 seconds, the machine switches to Energy Saver mode. To recover Energy Saver mode, press this key again for less than 3 seconds.
9	[Back] key	Press to cancel the last operation or to return to the previous level of the menu tree.
10	[OK] key	Press this key to confirm settings and setting values, or move to the next menu level.
11	Scroll Keys	Press to move the cursor in the direction indicated by the key.

Installing Option

This section explains how to install options.

Attaching Paper Feed Unit

⚠WARNING

- Touching the prongs of the power cable's plug with anything metallic constitutes a fire and electric shock hazard.

- It is dangerous to handle the power cord plug with wet hands. Doing so could result in electric shock.

⚠CAUTION

- Before installing or removing options, always disconnect the power cord plugs from the wall outlet and allow time for the main unit to fully cool. Failing to take these precautions could result in burns.

- The printer weighs approximately xx kg (xx lb.). Lift the printer using the inset grips on both sides of the printer, and then move it horizontally to the place where you want to use it.
- Lifting the paper feed unit carelessly or dropping may cause injury.
- Before moving the machine, unplug the power cord from the wall outlet. If the cord is unplugged abruptly, it could become damaged. Damaged plugs or cords can cause an electrical or fire hazard.

Important

- Tray 1 is required to print using the optional paper feed unit. Without Tray 1, paper jams will occur.
- Do not hold the tray to lift the machine.

1. **Turn off the machine's power, and then pull the power plug out of the wall outlet.**

2. **Remove the adhesive tape and the cushioning material from the optional paper feed unit.**

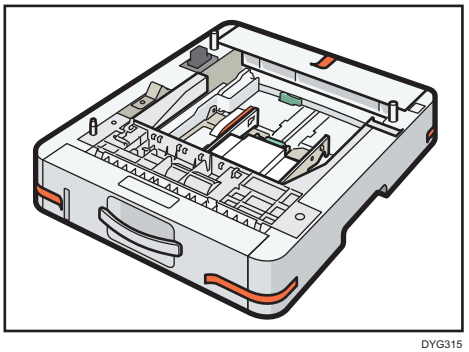

DYG315

3. **Lift the machine using the inset grips on both sides of the machine.**

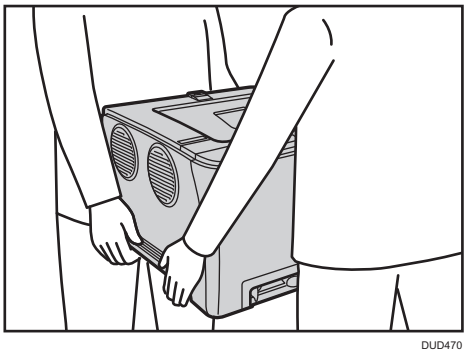

DUD470

4. **There are three upright pins on the optional paper feed unit. Align the holes of the machine with the pins, and then lower the machine slowly.**

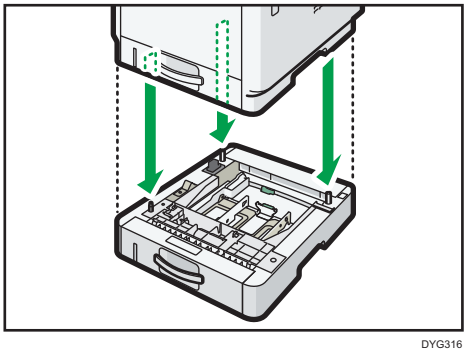

DYG316

5. **Insert the power plug into the wall outlet, and then turn on the power.**

Note

- After installing the optional paper feed unit, select Tray 2 in the printer driver. For details, see the printer driver Help.
- If the new device is listed in the column of configuration options, it has been properly installed.

- If the optional paper feed unit is not installed properly, try to install it again by repeating the procedure. If the problem persists, contact your sales or service representative.
- For details about printing the configuration page, see page 91 "List/Test Print Menu".

Installing the Wireless LAN Interface Board

Important

- Before beginning work, ground yourself by touching something metal to discharge any static electricity. Static electricity can damage the interface units.
- Do not subject the interface units to physical shocks.
- Be sure to turn off the machine before installing the wireless LAN interface board.
- Insert the wireless LAN interface board into the controller board of the back of the machine. Do not insert it into the USB flash disk port of the front of the machine.
- We recommend installing the printer driver on your computer after completing the configuration for the wireless LAN interface board.

1. **Check the contents of the package.**
2. **Turn the machine off and unplug the power cord.**
3. **Fully insert the interface board.**

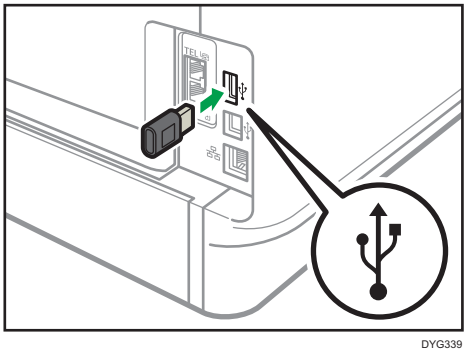

DYG339

Check that the interface board is firmly connected to the controller board.

4. **Plug in the power cord, and then turn on the machine.**
5. **Configure settings from the control panel.**

   For details, see Setup Guide.

Note

- Check that the board was correctly installed by printing the configuration page. If it is correctly installed, "Wireless (Wi-Fi)" will appear for "Network Settings" on the configuration page. For details about printing the configuration page, see page 91 "List/Test Print Menu".

- If the board was not installed properly, repeat the procedure from the beginning. If it cannot be installed correctly even after trying the installation a second time, contact your sales or service representative.
- Before using the board, you must configure settings from the control panel. For details, see Setup Guide.

About Operation Tools

This section explains the operation tools of this machine.

Control Panel

The control panel contains keys for controlling the machine.

For details about how to use the control panel, see page 73 "Configuring the Machine Using the Control Panel".

Web Image Monitor

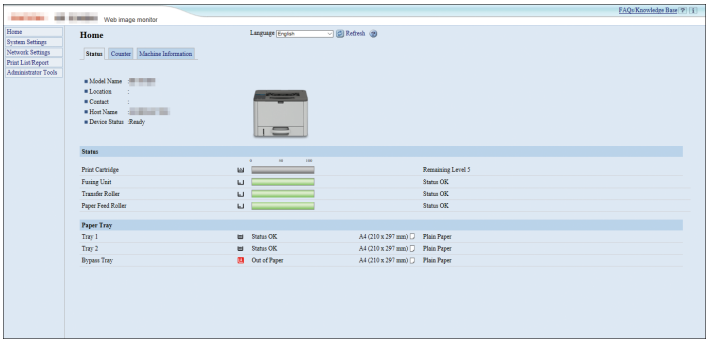

You can check the machine's status and configure its settings by accessing the machine directly using Web Image Monitor.

For details about how to use Web Image Monitor, see page 93 "Configuring the Machine Using Utilities".

Smart Organizing Monitor

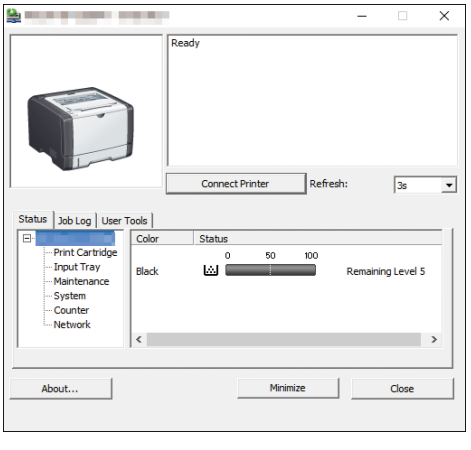

Install this utility on your computer from the included CD-ROM before using it.

Using Smart Organizing Monitor, you can check the machine's status, configure its settings, and use other functions.

For details about how to use Smart Organizing Monitor, see page 125 "Using Smart Organizing Monitor".

Using RICOH Smart Device Connector

To use RICOH Smart Device Connector, access the App Store or Google Play with your smart device, search for and download the "RICOH Smart Device Connector" application from the site.

Check the App Store or Google Play to see the functions you can use on RICOH Smart Device Connector.

1. **Press the [Menu] key.**

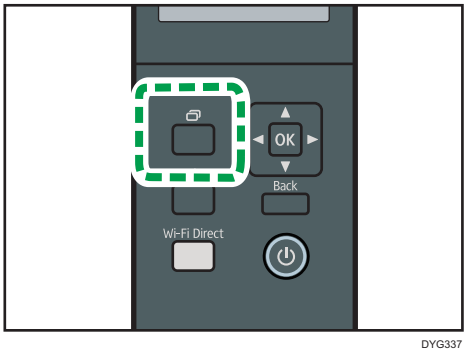

DYG337

2. **Press the [▲] or [▼] key to select [Print List/Report], and then press the [OK] key.**
3. **Press the [▲] or [▼] key to select [Maintenance Page], and then press the [OK] key.**
4. **When a message appears, press the [OK] key.**

   The Maintenance page including the QR code is printed.
5. **Start the application on the smart device, and then read the QR code.**

   Follow the instructions displayed on the application.

   For details about how to connect a smart device to the machine using Near-field communication (NFC), see page 25 "Connecting a Smart Device to the Machine Using NFC".

Connecting a Smart Device to the Machine Using NFC

This section describes how to connect your smart device to the machine using NFC.

Writing the Machine's Information to the NFC tag with a Smart Device

1. **Configure the network connection of the machine.**
2. **Access the App Store or Google Play from your smart device, search for and download the "RICOH Smart Device Connector" application from the site.**
3. **Press the [Menu] key.**

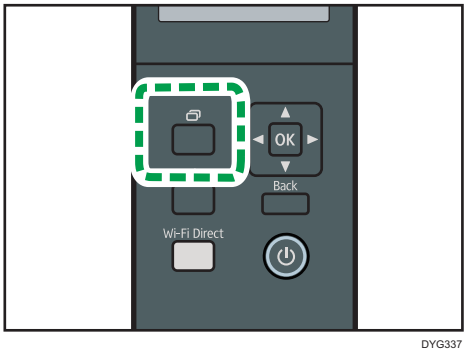

DYG337

4. **Press the [▲] or [▼] key to select [Print List/Report], and then press the [OK] key.**
5. **Press the [▲] or [▼] key to select [Maintenance Page], and then press the [OK] key.**
6. **When a message appears, press the [OK] key.**

   The Maintenance page including the QR code is printed.
7. **Start the application on the smart device, and then read the QR code.**
8. **Write the machine's network information to the NFC tag using the application, and then touch the NFC tag with the smart device.**

Using the Application on a Smart Device by Using NFC

1. **Start the application on the smart device, and then touch the NFC tag with the smart device.**
2. **Print using "RICOH Smart Device Connector" by touching the NFC tag.**

2. Paper Specifications and Adding Paper

This chapter describes how to load paper and originals and about their specifications.

Workflow for Loading Paper and Configuring Paper Sizes and Types

This section explains how to load paper and operations required after paper is loaded.

After following the procedures below, you can print on the paper that is loaded in the machine.

1 ▶ 2 ▶ 3 Load paper into the paper tray.

▼

1 ▶ 2 ▶ 3 Specify the paper type and size.

▼

1 ▶ 2 ▶ 3 Specify the paper type and size on the printer driver.

For details about the procedures, refer to the next page.

Procedure	Reference
1	See page 28 "Loading Paper".
2	There are two ways to specify the paper type and size. • When using the control panel See page 37 "Specifying Paper Type and Paper Size Using the Control Panel". • When using Web Image Monitor See page 42 "Specifying Paper Type and Paper Size Using Web Image Monitor". • When using Smart Organizing Monitor See page 40 "Specifying Paper Type and Paper Size Using Smart Organizing Monitor".
3	See page 43 "Specifying Paper Type and Paper Size Using the Printer Driver".

For details about supported paper, see page 45 "Supported Paper".

Loading Paper

This section explains how to load paper into the paper tray and the bypass tray.

⚠CAUTION

- When loading paper, take care not to trap or injure your fingers.

For information about supported paper, precautions for storing paper and print areas, see page 45 "Supported Paper".

Loading Paper into Tray1 and 2

The following example explains the loading procedure for the standard paper tray (Tray 1).

The same procedure applies to loading paper in Tray 2.

Important

- Before printing on paper other than envelopes, make sure to pull up the levers on the machine rear, inside the rear cover. Leaving the levers lowered can cause print quality problems when printing on paper other than envelopes.
- Curled paper may jam. Straighten curled paper before loading.
- After loading paper in the tray, specify the paper type and size using the control panel to avoid printing problems. This machine does not detect the paper size automatically.
- Make sure the paper stack does not exceed the upper limit mark inside the paper tray. Excessive stacking can cause paper jams.
- If paper jams occur frequently, flip the paper stack in the tray.
- Do not mix different types of paper in the same paper tray.
- After loading paper, specify the paper size using the control panel and paper type using the control panel. When printing a document, specify the same paper size and type in the printer driver as specified on the printer.
- Do not move the side fences and end fence forcefully. Doing so may damage the tray.
- Do not slide the paper tray in forcefully when inserting the loaded tray into the printer. Otherwise, the side and end fences or the paper guide of the bypass tray might move.

1. **Pull out the paper tray carefully with both hands.**

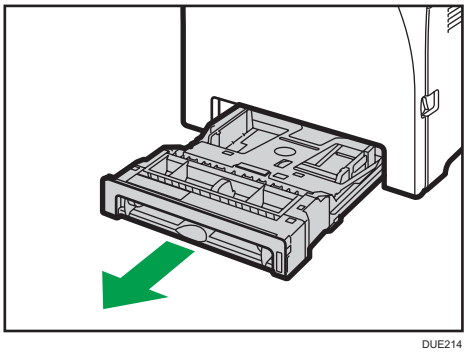

DUE214

Place the tray on a flat surface.

2. **Push the metal plate down until it clicks.**

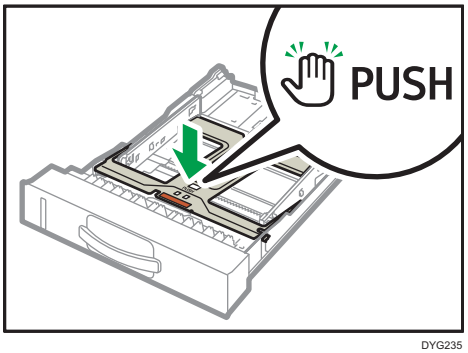

DYG235

3. **Pinch the clip on the side fence and the end fence, and slide them to the maximum extent.**

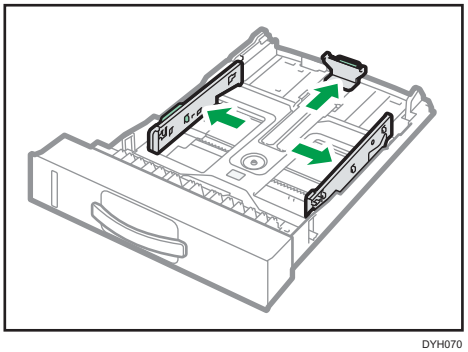

DYH070

4. **Fan the paper before loading it.**

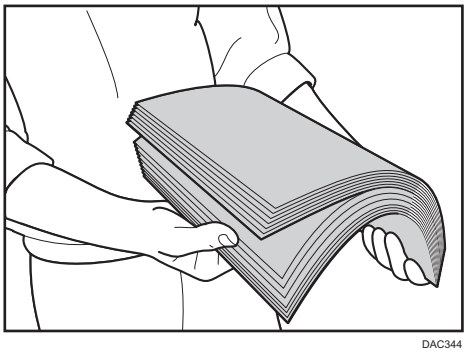

DAC344

5. **Load the paper in the tray with the print side faced down.**

   Make sure the paper is not stacked higher than the upper limit marked inside the tray.

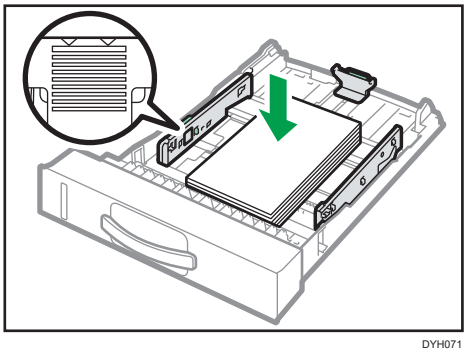

DYH071

6. **Slide the guides inward until they are flush against the sides of the paper.**

   Check there are no gaps between the paper and the fences; both side and end fences.

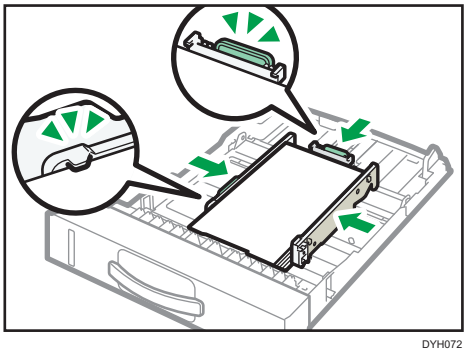

DYH072

7. **Carefully push the paper tray straight into the machine.**

   To avoid paper jams, make sure the tray is securely inserted.

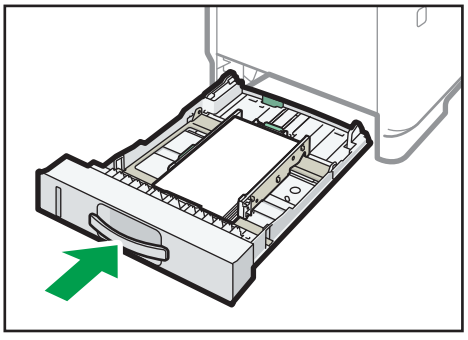

DYH073

Note

- The remaining paper indicator on the right front side of the paper tray shows approximately how much paper is remaining.

Extending Tray 1 to load paper

This section explains how to load paper longer than A4 (297 mm) into the machine.

1. **Pull out tray 1 carefully with both hands.**

   Place the tray on a flat surface.

2. **Push the metal plate down until it clicks.**

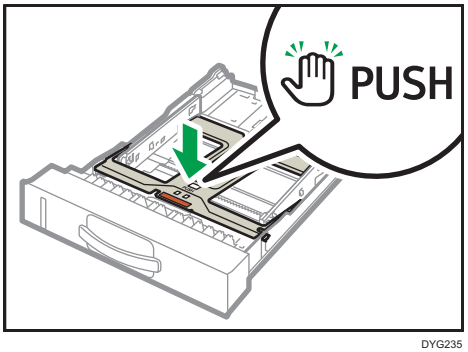

DYG235

3. **Pinch the lever in the rear of the tray, and then pull out the extender until it clicks.**

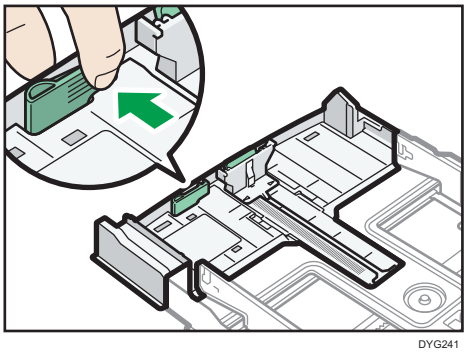

DYG241

4. **After extension, check that the arrows on the extender and tray are aligned.**

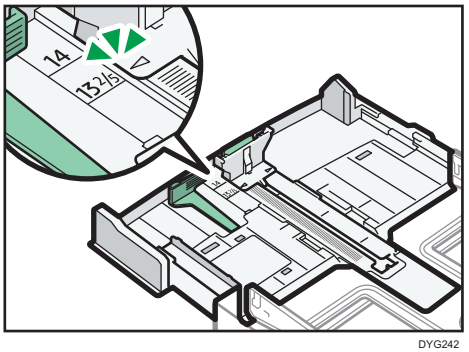

DYG242

5. **Follow Steps 3 to 7 in "Loading Paper into Tray1 and 2".**

Note

- To reinsert the extender, you might have to push it with moderate force.

Loading Paper into Bypass Tray

Important

- Before printing on paper other than envelopes, make sure to pull up the levers on the machine rear, inside the rear cover. Leaving the levers lowered can cause print quality problems when printing on paper other than envelopes.
- Do not load paper while the machine is printing.
- Load paper with the print side up and in the short-edge feed direction.
- Curled paper may jam. Straighten curled paper before loading.
- Tray 1 and 2 are unavailable if paper is loaded in the bypass tray.
- You cannot load paper into the bypass tray while the machine is in Energy Saver mode.

1. **Open the bypass tray.**

   If you load A4 (297 mm) or larger size paper, pull out the bypass tray extension.

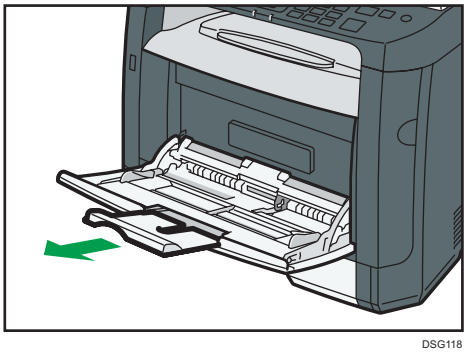

DSG118

2. **Slide the side guides outward, then load paper with the print side up, and push in until it stops against the machine.**

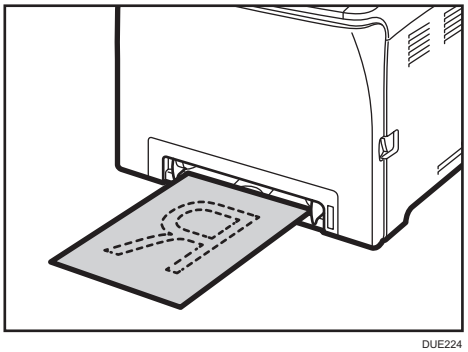

DUE224

3. **Adjust the paper guides to the paper size.**

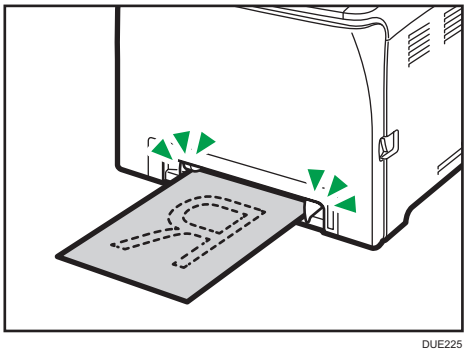

DUE225

Loading Envelopes

Important

- Before printing on envelopes, make sure to lower the levers on the machine rear, inside the rear cover, to avoid envelopes coming out creased. Also, pull up the levers back to their original positions after printing. Leaving the levers lowered can cause print quality problems when printing on paper other than envelopes.
- Avoid using self-adhesive envelopes. They may cause machine malfunctions.
- Check there is no air in the envelopes before loading.
- Load only one size and type of envelope at a time.
- Before loading envelopes, flatten their leading edges (the edge going into the machine) by running a pencil or ruler across them.
- Some kinds of envelope might cause misfeeds, wrinkles or print poorly.
- Print quality on envelopes may be uneven if parts of an envelope have different thicknesses. Print one or two envelopes to check print quality.
- In a hot and humid environment, the envelope might be output creased or improper printing quality.

1. **Open the bypass tray.**

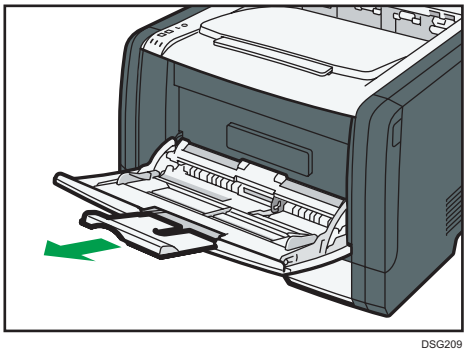

DSG209

2. **Slide the side guides outward, then load envelopes with the print side up, and push in until it stops against the machine.**

   Envelopes whose flaps are open must be printed with the flaps open, and envelopes whose flaps are closed must be printed with the flaps closed. Before loading envelopes, make sure they are as flat as possible.

3. **Adjust the side guides to the envelope width.**

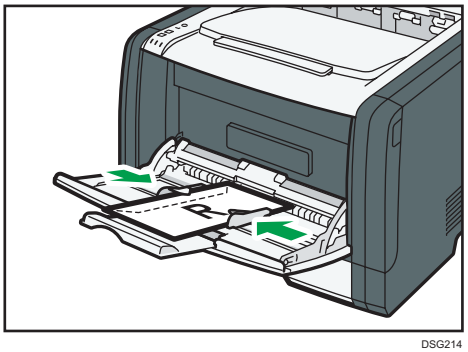

DSG214

4. **Open the rear cover.**

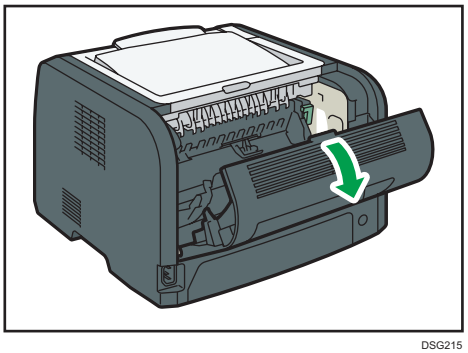

DSG215

5. **Lower the levers for printing envelopes on both sides to the position indicated with an envelope mark.**

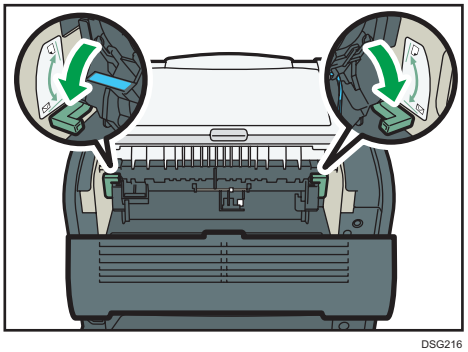

DSG216

Make sure to pull up the levers back to their original positions after printing.

6. **Close the rear cover.**

Note

- Be sure to load envelopes so that their flaps are on the left. If you do not, the envelopes will become creased.

- If printed envelopes come out badly creased, load the envelopes in the opposite direction, and then rotate the print object by 180 degrees using the printer driver before printing. For details, see the printer driver Help.

Specifying Paper Type and Paper Size Using the Control Panel

This section explains how to specify the paper size and paper type using the control panel.

Note

- Paper type and size can also be specified using the printer driver. For details, see the printer driver Help.
- For prints from the bypass tray or Tray 1, you can select to print according to either the printer driver settings or the control panel settings with [Bypass Tray Priority] or [Tray1 Priority] under [Paper Input]. For details about [Bypass Tray Priority] and [Tray1 Priority], see page 84 "Tray Paper Settings Menu".
- If [Auto Continue] under system settings is enabled, printing stops temporarily if a paper type/size error is detected. The printing restarts automatically with the settings made with the control panel after about ten seconds. However, if the size of paper specified on the control panel and that of the paper loaded in the paper tray or the paper size specified for the print job do not match when printing restarts, it may cause a paper jam. For details about [Auto Continue], see page 81 "System Settings Menu".

Specifying the Paper Type

This section explains how to specify the paper type.

1. **Press the [Menu] key.**

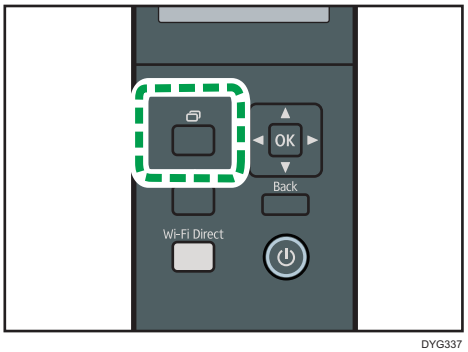

DYG337

2. **Press the [▲] or [▼] key to select [Tray Paper Settings], and then press the [OK] key.**
3. **Press the [▲] or [▼] key to select the paper type setting for the desired tray, and then press the [OK] key.**
4. **Press the [▲] or [▼] key to select the desired paper type, and then press the [OK] key.**
5. **Press the [Menu] key to return to the initial screen.**

Specifying the Standard Paper Size

This section explains how to specify the standard paper size.

1. **Press the [Menu] key.**

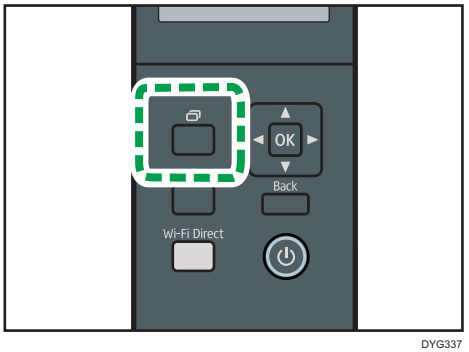

2. **Press the [▲] or [▼] key to select [Tray Paper Settings], and then press the [OK] key.**
3. **Press the [▲] or [▼] key to select the paper size setting for the desired tray, and then press the [OK] key.**
4. **Press the [▲] or [▼] key to select the desired paper size, and then press the [OK] key.**
5. **Press the [Menu] key to return to the initial screen.**

Specifying a Custom Paper Size

This section explains how to specify a custom paper size.

Important

- Custom size paper cannot be loaded in tray 2.
- When you perform printing, make sure that the paper size specified with the printer driver matches the paper size specified with the control panel. If a paper size mismatch occurs, a message appears on the display. To ignore the error and print using mismatched paper, see page 63 "If a Paper Mismatch Occurs".

1. Press the [Menu] key.

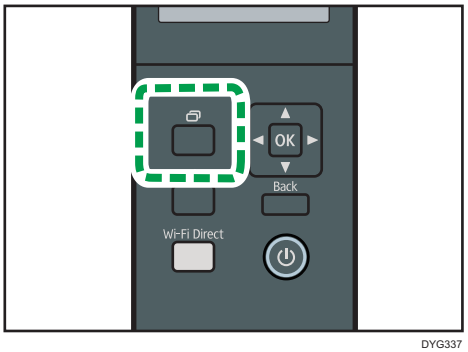

2. Press the [▲] or [▼] key to select [Tray Paper Settings], and then press the [OK] key.
3. Press the [▲] or [▼] key to select the paper size setting for the desired tray, and then press the [OK] key.
4. Press the [▲] or [▼] key to select [Custom Size], and then press the [OK] key.
5. Press the [▲] or [▼] key to select [mm] or [inch], and then press the [OK] key.
6. Enter the width using the [Menu] key and [▲] or [▼] key, and then press the [OK] key twice.
7. Enter the length using the [Menu] key and [▲] or [▼] key, and then press the [OK] key twice.
8. Press the [Menu] key to return to the initial screen.

Specifying Paper Type and Paper Size Using Smart Organizing Monitor

The procedure in this section is an example based on Windows 10. The actual procedure may vary depending on the operating system you are using.

1. **On the [Start] menu, open the pull-down list next to [SP 330_3710_Series Software Utilities].**
2. **Click [Smart Organizing Monitor for SP 330_3710_Series].**

   Smart Organizing Monitor starts.

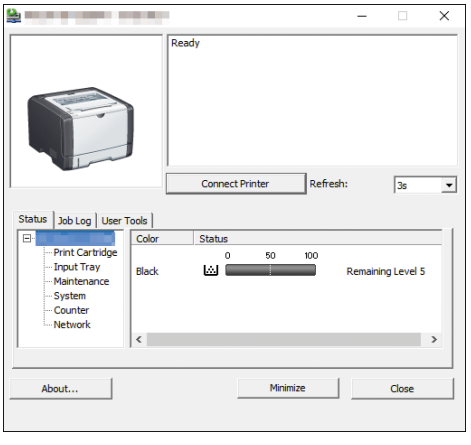

3. **If the machine you are using is not selected, click [Connect Printer], and then do one of the following:**
   - Select the machine's model.
   - Enter the IP address of the machine manually.
   - Click [Search Network Printer] to search the machine via the network.
4. **Click [OK].**
5. **On the [User Tools] tab, click [Printer Configuration].**

   If you are requested to enter an access code, enter the access code and then click [OK].

   The default access code is "Admin".
6. **On the [Paper Input] tab, select the paper type and paper size, and then click [OK].**
7. **Click [Close].**

Specifying a Custom Paper Size

1. **On the [Start] menu, open the pull-down list next to [SP 330_3710_Series Software Utilities].**
2. **Click [Smart Organizing Monitor for SP 330_3710_Series].**
3. **If the machine you are using is not selected, click [Connect Printer], and then do one of the following:**
   - Select the machine's model.
   - Enter the IP address of the machine manually.
   - Click [Search Network Printer] to search the machine via the network.
4. **Click [OK].**
5. **On the [User Tools] tab, click [Printer Configuration].**

   If you are requested to enter an access code, enter the access code and then click [OK].

   The default access code is "Admin".
6. **On the [Paper Input] tab, select [Custom Paper Size] in the [Paper Size] list.**
7. **In the [Unit:] list, select [mm:] or [inch:].**
8. **In the [Horizontal] box and [Vertical] box, specify the width and length.**
9. **Click [OK].**
10. **Click [Close].**

Specifying Paper Type and Paper Size Using Web Image Monitor

This section describes how to specify paper sizes and types using Web Image Monitor.

1. **Start the web browser and access the machine by entering its IP address.**

   The top page of Web Image Monitor appears.

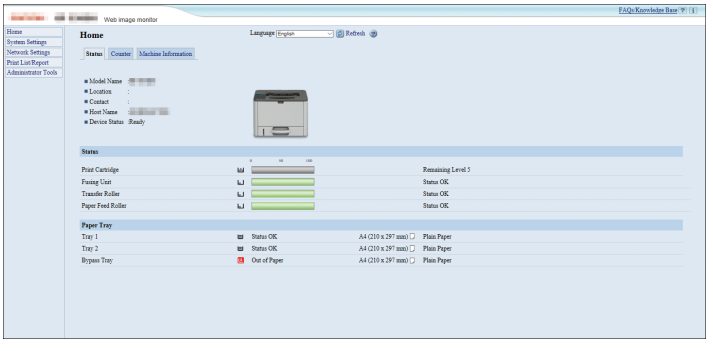

2. **Click [System Settings].**
3. **Click [Tray Paper Settings].**
4. **Select the paper type and paper size for the tray you want to use.**
5. **Enter the administrator password if required.**
6. **Click [OK].**
7. **Close the web browser.**

Specifying a Custom Paper Size

1. **Start the web browser and access the machine by entering the IP address.**
2. **Click [System Settings].**
3. **Click [Tray Paper Settings].**
4. **Select [Custom Size] in the [Paper Size] list.**
5. **Select [mm] or [inch] and specify the width and length.**
6. **Enter the administrator password if required.**
7. **Click [OK].**
8. **Close the web browser.**

Specifying Paper Type and Paper Size Using the Printer Driver

Important

- Make sure that the paper type and size specified with the printer driver matches the type and size of the paper loaded in the tray. Since this machine does not detect paper sizes automatically, the type or size of the paper may be mismatched and the print job may not print correctly.

When Using Windows

The procedure in this section is an example based on Windows 10. The actual procedure may vary depending on the operating system you are using.

PCL printer driver

1. **Open the [Printing Preferences] dialog box from the printer driver.**

   For information of how to open the printer driver properties from [Devices and printers], see page 60 "Displaying the Printing Preferences Dialog Box".

   The [Printing Preferences] dialog box appears.

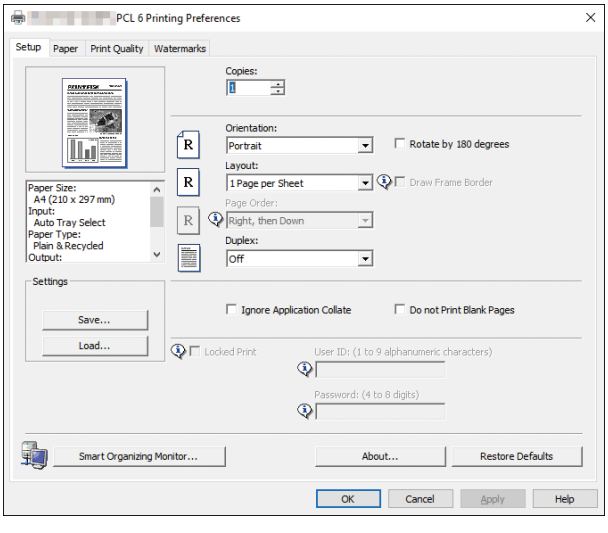

2. **Click the [Paper] tab.**
3. **In the [Input Tray:] list, select the paper tray you want to use for printing.**
4. **In the [Paper Type:] list, select the type of paper that is loaded in the paper tray.**

5. **Select the [Print On] check box and select the size of the paper that is loaded in the paper tray.**

   Clear the [Fit to Print Size] check box as necessary.

6. **Click [OK].**

PostScript printer driver

1. **Open the [Printing Preferences] dialog box from the printer driver.**

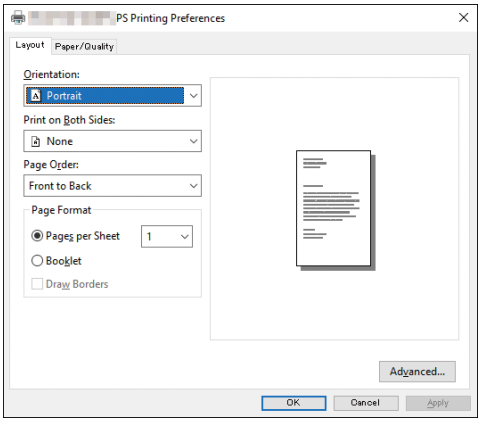

2. **Click the [Paper/Quality] tab.**
3. **In the [Paper Source:] list, select the paper tray you want to use for printing.**
4. **In the [Media:] list, select the type of paper that is loaded in the paper tray.**
5. **Click [OK].**

When Using OS X

The procedure in this section is an example based on OS X 10.11. The actual procedure may vary depending on the operating system you are using.

1. **Start System Preferences.**
2. **Click [Printers & Scanners].**
3. **Select the printer you are using.**
4. **In the [Default paper Size:] list, select the size of the document to be printed.**

Supported Paper

Important

- After loading paper in the tray, specify the paper type and size using the control panel or using Smart Organizing Monitor and the printer driver. This machine does not detect the paper size automatically.
- When loading custom size paper into Tray 1 or the bypass tray, specify the width and length using the control panel or using Smart Organizing Monitor and the printer driver.
- When printing on custom size paper from the bypass tray, you can print without specifying the paper type or paper size from the control panel depending on the settings for [Bypass Priority].

Tray 1

Type	Size	Weight	Capacity
Plain Paper Recycled Paper Thick Paper 1 Thick Paper 2 Thin Paper Letterhead Preprinted Paper Label Paper Prepunched Paper Bond Paper Cardstock Color Paper Special Paper	A4, B5 JIS, A5 LEF (210 × 148 mm), A5, B6 JIS, A6, $8^1/_2$ × 14, $8^1/_2$ × 11, $5^1/_2$ × $8^1/_2$, $8^1/_2$ × 13, 16K, $8^1/_2$ × $13^2/_5$, $8^1/_2$ × $13^3/_5$, 8.11 × 13.3	52 to 162 g/m^2 (14 to 43 lb.)	250 (80 g/m^2, 20 lb.)

Type	Size	Weight	Capacity
Plain Paper Recycled Paper Thick Paper 1 Thick Paper 2 Thin Paper Letterhead Preprinted Paper Label Paper Prepunched Paper Bond Paper Cardstock Color Paper Special Paper	Custom size: 100 to 216 mm in width, 148 to 356 mm in length (3.94 to 8.50 inches in width, 5.83 to 14.02 inches in length)	52 to 162 g/m^2 (14 to 43 lb.)	250 (80 g/m^2, 20 lb.)

Tray 2 (option)

Type	Size	Weight	Capacity
Thin Paper Plain Paper Thick Paper 1 Recycled Paper Color Paper Preprinted Paper Prepunched Paper Letterhead Special Paper	A4, B5 JIS, A5, $8^1/_2 \times 14$, $8^1/_2 \times 13^2/_5$, $8^1/_2 \times 11$, $5^1/_2 \times 8^1/_2$	52 to 162 g/m^2 (14 to 43 lb.)	500 (80 g/m^2, 20 lb.)

Bypass tray

Type	Size	Weight	Capacity*1
Plain Paper Recycled Paper Thick Paper 1 Thick Paper 2 Thin Paper Letterhead Envelope Label Paper Prepunched Paper Bond Paper Cardstock Color Paper Special Paper	A4, B5 JIS, A5 LEF (210 × 148 mm), A5, B6 JIS, A6, $8^1/_2$ × 14, $8^1/_2$ × 11, $5^1/_2$ × $8^1/_2$, $8^1/_2$ × 13, 16K, $4^1/_8$ × $9^1/_2$, $3^7/_8$ × $7^1/_2$, C5 Env, C6 Env, DL Env, $8^1/_2$ × $13^2/_5$, $8^1/_2$ × $13^3/_5$, 8.11 × 13.3	52 to 162 g/m^2 (14 to 43 lb.)	50 (80 g/m^2, 20 lb.)
Plain Paper Recycled Paper Thick Paper 1 Thick Paper 2 Thin Paper Letterhead Envelope Label Paper Prepunched Paper Bond Paper Cardstock Color Paper Special Paper	Custom size: 90 to 216 mm in width, 140 to 356 mm in length (3.54 to 8.50 inches in width, 5.51 to 14.02 inches in length)	52 to 162 g/m^2 (14 to 43 lb.)	50 (80 g/m^2, 20 lb.)

*1 The number of envelopes that can be loaded is up to 8.

Specifications of Paper Types

The following tables describe the types of paper that can be used with this machine.

Important

- Depending on the paper type, the toner may take a while to dry. Before handling printed sheets, make sure that they have fully dried. Otherwise, the toner may smudge.
- Print quality can be guaranteed only if recommended paper is used. For more information about the recommended paper, contact your sales or service representative.

Plain Paper

Item	Description
Paper thickness	65 to 99 g/m^2 (17 to 27 lb.)
Supported paper tray	Can be used with any of the paper trays.
Duplex supported size	A4, $8^1/_2 \times 14$, $8^1/_2 \times 11$, $8^1/_2 \times 13$, $8^1/_2 \times 13^2/_5$, $8^1/_2 \times 13^3/_5$, 8.11 × 13.3

Thick Paper 1

Item	Description
Paper thickness	100 to 130 g/m^2 (27 to 35 lb.)
Supported paper tray	Can be used with any of the paper trays.*1
Duplex supported size	A4, $8^1/_2 \times 11$, $8^1/_2 \times 14$, $8^1/_2 \times 13$, $8^1/_2 \times 13^2/_5$, $8^1/_2 \times 13^3/_5$, 8.11 × 13.3

*1 You can use thick paper that is 105 g/m^2 or less when using Tray 2 or duplex function.

Thick Paper 2

Item	Description
Paper thickness	131 to 162 g/m^2 (35 to 43 lb.)
Supported paper tray	Tray 1 and bypass tray

Item	Description
Duplex supported size	None

Thin Paper

Item	Description
Paper thickness	52 to 64 g/m^2 (14 to 16 lb.)
Supported paper tray	Can be used with any of the paper trays.*1
Duplex supported size	A4, $8^1/_2 \times 14$, $8^1/_2 \times 11$, $8^1/_2 \times 13$, $8^1/_2 \times 13^2/_5$, $8^1/_2 \times 13^3/_5$, 8.11 × 13.3

*1 You can use thin paper that is 60 g/m^2 or more when using Tray 2 or duplex function.

Recycled Paper

Item	Description
Paper thickness	75 to 90 g/m^2 (20 to 24 lb.)
Supported paper tray	Can be used with any of the paper trays.
Duplex supported size	A4, $8^1/_2 \times 14$, $8^1/_2 \times 11$, $8^1/_2 \times 13$, $8^1/_2 \times 13^2/_5$, $8^1/_2 \times 13^3/_5$, 8.11 × 13.3
Notes	If the paper thickness is outside the specified range, select [Thin Paper], [Plain Paper], [Thick Paper 1], or [Thick Paper 2].

Color Paper

Item	Description
Paper thickness	75 to 90 g/m^2 (20 to 24 lb.)
Supported paper tray	Can be used with any of the paper trays.
Duplex supported size	A4, $8^1/_2 \times 14$, $8^1/_2 \times 11$, $8^1/_2 \times 13$, $8^1/_2 \times 13^2/_5$, $8^1/_2 \times 13^3/_5$, 8.11 × 13.3

Item	Description
Notes	If the paper thickness is outside the specified range, select [Thin Paper], [Plain Paper], [Thick Paper 1], or [Thick Paper 2].

Special Paper

Item	Description
Paper thickness	xxxx
Supported paper tray	xxxx
Duplex supported size	xxxx
Notes	xxxx

Preprinted Paper

Item	Description
Paper thickness	75 to 90 g/m^2 (20 to 24 lb.)
Supported paper tray	Can be used with any of the paper trays.
Duplex supported size	A4, $8^1/_2 \times 14$, $8^1/_2 \times 11$, $8^1/_2 \times 13$, $8^1/_2 \times 13^2/_5$, $8^1/_2 \times 13^3/_5$, 8.11 × 13.3
Notes	If the paper thickness is outside the specified range, select [Thin Paper], [Plain Paper], [Thick Paper 1], or [Thick Paper 2].

Prepunched Paper

Item	Description
Paper thickness	75 to 90 g/m^2 (20 to 24 lb.)
Supported paper tray	Can be used with any of the paper trays.
Duplex supported size	A4, $8^1/_2 \times 14$, $8^1/_2 \times 11$, $8^1/_2 \times 13$, $8^1/_2 \times 13^2/_5$, $8^1/_2 \times 13^3/_5$, 8.11 × 13.3

Item	Description
Notes	If the paper thickness is outside the specified range, select [Thin Paper], [Plain Paper], [Thick Paper 1], or [Thick Paper 2].

Letterhead

Item	Description
Paper thickness	100 to 130 g/m^2 (27 to 24 lb.)
Supported paper tray	Can be used with any of the paper trays.*1
Duplex supported size	A4, $8^1/_2 \times 14$, $8^1/_2 \times 11$, $8^1/_2 \times 13$, 16K, $8^1/_2 \times 13^2/_5$, $8^1/_2 \times 13^3/_5$, 8.11 × 13.3
Notes	Paper that has a thickness outside the specified range cannot be printed onto.

*1 You can use Letterhead that is 105 g/m^2 or less when using Tray 2 or duplex function.

Bond Paper

Item	Description
Paper thickness	100 to 160 g/m^2 (27 to 43 lb.)
Supported paper tray	Tray 1 and bypass tray
Duplex supported size	None
Notes	If the paper thickness is outside the specified range, select [Thin Paper], [Plain Paper], [Thick Paper 1], or [Thick Paper 2].

Cardstock

Item	Description
Paper thickness	100 to 160 g/m2 (27 to 43 lb.)
Supported paper tray	Tray 1 and bypass tray
Duplex supported size	None

Item	Description
Notes	If the paper thickness is outside the specified range, select [Thin Paper], [Plain Paper], [Thick Paper 1], or [Thick Paper 2].

Label Paper

Item	Description
Paper thickness	100 to 160 g/m2 (27 to 43 lb.)
Supported paper tray	Tray 1 and bypass tray
Duplex supported size	None
Notes	Avoid using adhesive label paper on which glue is exposed. Glue may stick to the inner parts of the machine, which can cause paper feed problems, deterioration in print quality, or premature wear of the print cartridge's photo conductor unit.

Envelope

Item	Description
Supported paper tray	Bypass tray
Duplex supported size	None

Notes

- Avoid using self-adhesive envelopes. They may cause machine malfunctions.
- Paper can be loaded only up to the lower of the two paper limit marks of the tray.
- If printed envelopes come out badly creased, load the envelopes in the opposite direction. Also, configure the printer driver to rotate the print object 180 degrees. For details about changing the orientation see the printer driver Help.
- Environmental factors can degrade the print quality on both recommended and non-recommended envelopes.
- If envelopes are severely curled after printing, flatten them by bending them back against the curl.
- After printing, envelopes sometimes have creases along their long edges and toner smear on their unprinted sides. Print images might also be blurred. When printing large, black-solid areas, striping can occur as a result of the envelopes overlapping.

- To correctly specify the length of an envelope whose flap opens along its short edge, be sure to include the open flap when measuring.

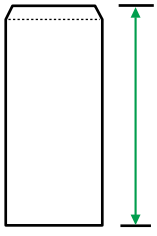

CER112

- Fan envelopes, and then align their edges before loading.

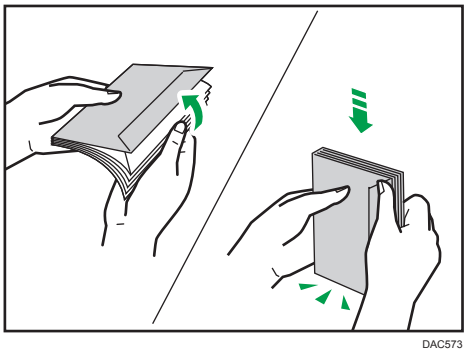

DAC573

- When fanning envelopes, make sure they are not stuck together. If they are stuck together, separate them.
- When fanning envelopes, make sure the envelope flaps are not stuck. If they are stuck, separate them.
- Before loading envelopes, flatten them out so that their curl does not exceed that shown as shown below.

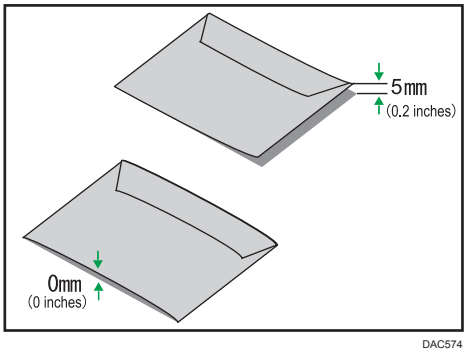

DAC574

- If the curl is severe, flatten out the envelopes using your fingers, as shown below.

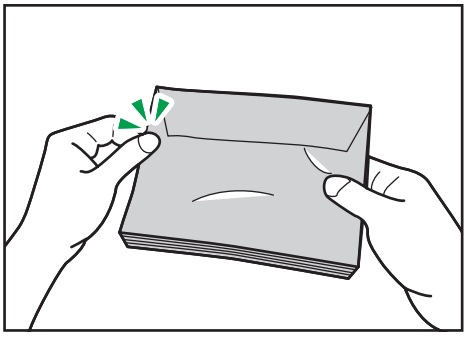

DAC575

Non-Recommended Paper Types

Do not use the following types of paper:

- Ink-jet printer paper
- Bent, folded, or creased paper
- Curled or twisted paper
- Torn paper
- Wrinkled paper
- Damp paper
- Dirty or damaged paper
- Paper that is dry enough to emit static electricity
- Paper that has already been printed onto, except a preprinted letterhead paper.

  Malfunctions are especially likely when using paper printed on by other than a laser printer (e.g.monochrome and color copiers, ink-jet printers, etc.)
- Special paper, such as thermal paper and carbon paper
- Paper weighing heavier or lighter than the limit
- Paper with windows, holes, perforations, cutouts, or embossing
- Adhesive label paper on which glue or base paper is exposed
- Paper with clips or staples

Note

- When loading paper, take care not to touch the surface of the paper.
- Even if paper is adequate for the machine, poorly stored paper can cause paper misfeeds, print quality degradation, or malfunctions.

Paper Storage

Important

- **Store paper appropriately. If the paper is stored incorrectly, misfeeds, lower printing quality, or malfunctions may result.**

When storing paper:

- Do not store paper in a humid place.
- Do not store paper in direct sunlight.
- Do not stand paper on its edge.
- Store any leftover paper in a wrapping or box supplied with the paper.

Print Area

The diagram below shows the area of the paper that the machine can print on.

From the printer driver

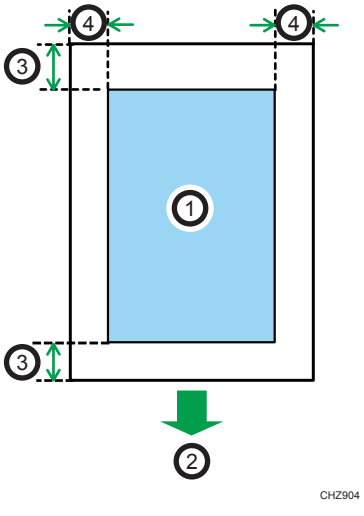

1. Print area
2. Feed direction
3. Approx. 4.2 mm (0.2 inches)
4. Approx. 4.2 mm (0.2 inches)

Envelope

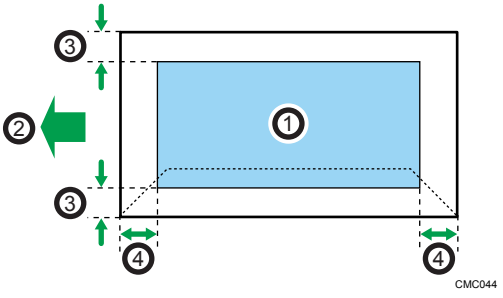

1. Print area
2. Feed direction
3. Approximately 4.2 mm (0.2 inches)
4. Approximately 4.2 mm (0.2 inches)

Note

- Borderless printing is not supported.
- The print area may vary depending on the paper size, printer language and printer driver settings.
- For better envelope printing, we recommend you set the right, left, top, and bottom print margins to at least 15 mm (0.6 inches) each.

3. Printing Documents

This chapter describes how to configure settings on the printer driver and print documents.

What You Can Do with the Printer Function

Duplex printing

You can print on both sides of a sheet of paper. For details, see the printer driver Help.

Combined printing

You can combine multiple pages and print them on a single sheet of paper. For details, see the printer driver Help.

Configuring Option Settings for the Printer

When bidirectional communication works correctly, your computer obtains information about option, paper size and paper feed direction settings from the machine automatically. Bidirectional communication also allows you to monitor machine status.

Conditions for Bidirectional Communication

To support bidirectional communication, the following conditions must be met:

When connected with the network

- The Standard TCP/IP port must be used.
- In addition to the above, one of the following conditions must also be met:
  - The TCP/IP protocol or the IPP protocol is used. (When using the IPP protocol, the IPP port name must include the IP address.)

When connected with USB

- The machine must be connected to the computer's USB port using the USB interface cable.
- The computer must support bidirectional communication.
- [Enable bidirectional support] must be selected, and [Enable printer pooling] must not be selected on the [Ports] tab with the printer driver.

If Bidirectional Communication is Disabled

This section describes how to set up option and setting of paper size for each tray on your computer manually.

Important

- Manage Printers permission is required to change the printer properties. Log on as an Administrators group member.

When Using Windows

The procedure in this section is an example based on Windows 10.

1. **On the [Start] menu, select [Control Panel] under [Windows System].**
2. **Click [view devices and printers].**
3. **Right-click the machine's icon, and then click [Printer properties].**
4. **Click the [Accessories] tab.**
5. **Select options installed from the [Options] area, and then make the necessary settings.**

6. **Click [Paper Size Settings] tab.**
7. **In [Input Tray:] select which trays to use, and then, in [Paper Size:] select the size of the paper that you want to load in each tray.**

   Click [Update] to apply the setting for each tray.
8. **Click [Apply].**
9. **Click [OK] to close the printer properties window.**

When Using OS X

The following procedure is explained using OS X 10.11 as an example.

1. **Start System Preferences.**
2. **Click [Printers & Scanners].**
3. **Select the printer you are using, and then click [Options & Supplies...].**
4. **Click [Options], and then configure settings as needed.**
5. **Click [OK].**
6. **Quit System Preferences.**

Displaying the Printing Preferences Dialog Box

To change the default settings of the printer driver, configure settings in the [Printing preferences] dialog box.

To change the default settings of all applications, open the [Printing preferences] dialog box from the OS. For details, see page 60 "Displaying the Printing Preferences Dialog Box from the [Start] Menu".
To change the default settings of a specific application, open the [Printing preferences] dialog box from that application. For details, see page 60 "Displaying the Printing Preferences Dialog Box in an Application".

Displaying the Printing Preferences Dialog Box from the [Start] Menu

This section explains how to open the [Printing preferences] dialog box from [Devices and Printers].

Important

- When the printer driver is distributed from the print server, the setting values specified by the server are displayed as the default for [Printing Defaults...].
- You cannot configure different print settings for each user. The settings configured in this dialog box are used as the default.

1. **On the [Start] menu, select [Control Panel] under [Windows System].**
2. **Click [view devices and printers].**
3. **Right-click the icon of the printer you want to use.**
4. **Click [Printing preferences].**

Displaying the Printing Preferences Dialog Box in an Application

You can make printer settings for a specific application. To make printer settings for a specific application, open the [Printing preferences] dialog box from that application.

The settings displayed in the [Printing preferences] dialog box opened from the [Devices and Printers] window are applied as the default in the [Printing preferences] dialog box opened in an application. When printing from an application, modify the settings as required.

The screens displayed may differ depending on the application. The following procedure explains how to print documents from an application using WordPad in Windows 10 as an example.

Displaying the printing preferences dialog box in an application when using Windows

1. **Click [File] in the upper left corner of the window, and then click [Print].**

2. **In the [Select Printer] list, select the printer you want to use.**
3. **Click [Preferences].**

Note

- Procedures for opening the [Printing preferences] dialog box vary depending on the application. For details, see the printer driver Help or the manuals provided with the application.

Displaying the Printing preferences Dialog Box in an Application When Using OS X

The following procedure is explained using OS X 10.11 as an example.

1. **Open the document to print.**
2. **Select [Print...] on the [File] menu.**
3. **Check that the machine name or IP address you are using is selected in the [Printer:] popup menu.**

   If the machine name or IP address you are using is not selected in the [Printer:] list, click the list, and then select the machine.

Basic Operation of Printing

The following procedure explains how to perform basic printing.

The procedure in this section is an example based on Windows 10. The actual procedure may vary depending on the operating system you are using.

For details of printing options, see the printer driver Help.

1. **Open the printer properties dialog box in your document's application.**

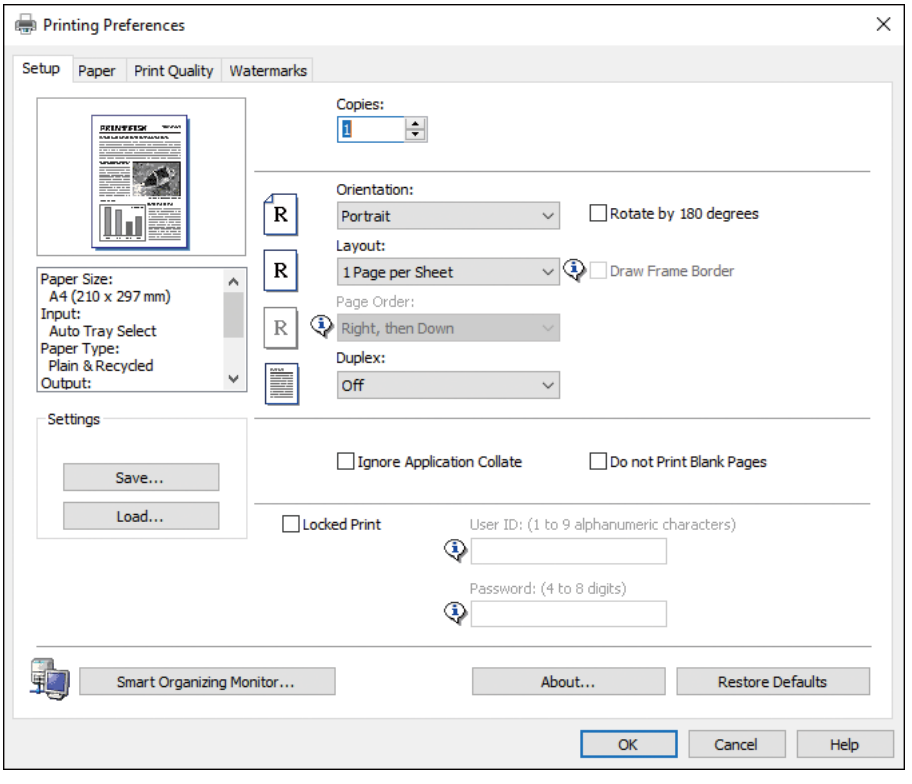

For details about each setting, click [Help]. You can also click the information icons to show configuration information.

2. **Set printing options as necessary, and then click [OK].**

   The printer properties dialog box closes.

3. **Click [Print].**

Note

- You can specify which paper tray is selected first in [Paper Tray Priority] under [Tray Paper Settings] menu when the trays are automatically selected while you are printing. For details about [Tray Paper Settings], see page 84 "Tray Paper Settings Menu".

- If a paper jam occurs, printing stops after the current page has been printed out. After the jammed paper is removed, printing restarts from the jammed page automatically. For details about how to remove the jammed paper, see page 145 "Removing Paper Jams".
- After printing on envelopes, make sure to pull up the levers for printing on envelopes back to their original positions. Leaving the levers lowered can cause print quality problems when printing on paper other than envelopes. For details about the levers for printing on envelopes, see page 28 "Loading Paper".

If a Paper Mismatch Occurs

The machine reports an error if:

- The paper size does not match the print job's settings when [Size Mismatch Detection] under [Tray Paper Settings] is enabled.
- The paper type does not match the print job's settings when [Input Tray:] is set to [Auto Tray Select].

There are two ways to resolve these errors:

Continue printing using mismatched paper

Ignore the error and print using mismatched paper.

Cancel the print job

Cancel printing.

Note

- For details about [Size Mismatch Detection], see page 84 "Tray Paper Settings Menu".
- If [Auto Continue] under [System Settings] is enabled, the machine ignores the paper type and size settings and prints on whatever paper is loaded. Printing stops temporarily when the error is detected, and restarts automatically after about ten seconds using the settings made on the control panel. For details about [Auto Continue], see page 81 "System Settings Menu".

Continuing printing using mismatched paper

If the paper is too small for the print job, the printed image will be cropped.

1. **Press the [OK] key.**

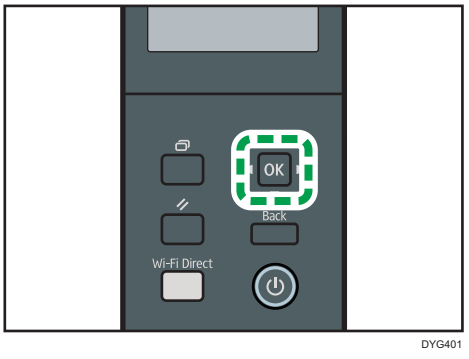

Canceling a Print Job

You can cancel print jobs using either the machine's control panel or your computer, depending on the status of the job.

Canceling a print job before printing has started

Windows

1. **Double-click the printer icon on the task tray of your computer.**
2. **Select the print job you want to cancel, click the [Document] menu, and then click [Cancel].**
3. **Click [Yes].**

OS X

1. **Start System Preferences.**
2. **Click [Printers & Scanners].**
3. **Select the printer you are using, and then click [Open Print Queue...].**
4. **Select the queue you want to delete.**
5. **Click [×].**

Note

- If you cancel a print job that has already been processed, printing may continue for a few pages before being canceled.
- It may take a while to cancel a large print job.

Canceling a print job while printing

1. **Press the [Job Reset] key.**

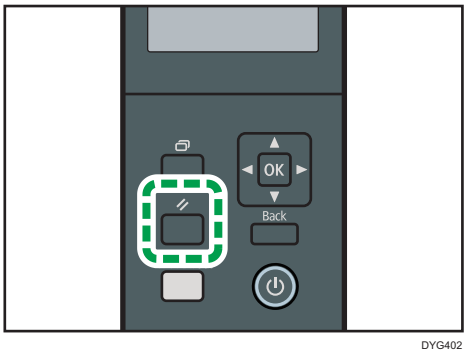

DYG402

Printing Confidential Documents

By the Locked Print function, you can password-protect print jobs.

This means that your job is printed only after you enter the password using the machine's control panel.

This function prevents unauthorized users from seeing sensitive documents at the machine.

Important

- This function is only available when using the PCL printer driver, and printing from a computer running a Windows operating system.
- The procedure in this section is an example based on Windows 10.

Storing a Locked Print file

This section explains how to store a Locked Print file in the machine using the printer driver.

You can also store a Locked Print file in the machine using RICOH Smart Device Connector. For details about RICOH Smart Device Connector, see the manuals for RICOH Smart Device Connector.

1. **Open the file you want to print on your computer.**
2. **On the [File] menu, click [Print...].**
3. **In the [Select Printer] area, select the name of this machine, and then click [Preferences].**
4. **Click the [Setup] tab, and then select the [Locked Print] check box.**

   The [Password:] and [User ID:] text boxes become available.

   The [User ID:] text box contains the login user name of your computer account or the user code used for the previous Locked Print job.
5. **Type the password (containing 4 to 8 digits) and user ID (containing 1 to 9 alphanumeric characters), and then click [OK].**

   The user ID will be used to identify your Locked Print file on the machine's control panel.
6. **Execute a print command.**

   The print job is stored in the machine as a Locked Print file. You can print the file by entering the password using the control panel.

Note

- The Locked Print file is automatically erased from the machine's memory when it is printed out, or when the machine's power is turned off.
- The machine can store up to 5 jobs or 5 MB of Locked Print data at a time.
- Even if the machine cannot store any more Locked Print files, the machine holds a new Locked Print file for the period of time specified in [Locked Print] under system settings before canceling the job.

Within this time, you can print or delete the new Locked Print file. You can also print or delete an existing Locked Print file so that the new Locked Print file can be stored in the machine.

Printing a Locked Print File

When there is a Locked Print file stored in the printer, "Locked Print Job" and "Press User Tools key." appears on the printer's control panel display.

Use the following procedure to unlock and print the Locked Print file.

1. **Press the [Menu] key.**
2. **Press the [▲] or [▼] key to select the file you want to print, and then press the [OK] key.**

   Identify the Locked Print file by checking its time stamp and user ID.
3. **Press the [◀] key to select [Print].**
4. **Press the [Menu] key.**
5. **Press the [▲], [▼], [◀], or [▶] key to select the number you want to enter, and then press the [OK] key.**
6. **Repeat Steps 4 and 5 to enter all the numbers you want to enter.**
7. **After entering all the numbers, press the [OK] key.**

   The Locked Print file is printed.

Deleting a Locked Print File

When there is a Locked Print file stored in the printer, "Locked Print Job" and "Press User Tools key." appears on the printer's control panel display.

Use the following procedure to delete a Locked Print file. You do not need to enter a password to delete a Locked Print file.

1. **Press the [Menu] key.**
2. **Press the [▲] or [▼] key to select the file you want to delete, and then press the [OK] key.**

   Identify the Locked Print file by checking its time stamp and user ID.
3. **Press the [◀] key to select [Delete].**

   The Locked Print file is deleted.

   If there are Locked Print files/logs remaining in the printer, the display returns to the list of Locked Print files/logs. If there are none remaining, the display returns to the initial screen.

Printing with Mopria

This machine supports Mopria.

For more information about Mopria, please visit: http://mopria.org/how-to-print.

Using Various Print Functions

This section briefly describes various print functions that you can configure with the printer driver to make printouts appropriate for your purposes.

Print Quality Functions

Print quality and color tone can be adjusted to suit the print data. Some of the print quality settings you can configure are described below.

Changing the image printing method

You can select to print with priority on print quality or print speed. When printing images, the higher the resolution of images, the longer the time required for printing.

Changing the graphics mode

You can send graphic information to the machine as either raster or vector images. Most geometric shapes or patterns print faster as vector images than as raster images. However, if certain graphics do not print as they appear on the screen, try to print them as raster images.

Saving toner when printing

You can save toner by printing with lower toner consumption. While this increases the life of the print cartridge, the output appears slightly lighter.

Changing the printable area

You can change the printable area when printing a document printed on a single page with one machine is printed on two separate pages with another machine, or vice-versa.

Changing the method of downloading TrueType fonts to the machine

When you print documents that contain characters in TrueType fonts, garbled or distorted characters may be printed. Changing the method of downloading TrueType fonts may help to solve the problem.

Changing the dither pattern

A dither pattern is a pattern of dots used to simulate a color or shade of an image. If the pattern is changed, the characteristics of the image will also change. You can select a pattern suitable for the image to be printed.

Note

- Some of the functions described above might not be available depending on the printer driver or operating system. For details, see the printer driver Help.

Print Output Functions

You can specify the form of print outputs according to your purposes. This section briefly describes some of the settings that you can specify.

Printing multiple sets of a document

You can print multiple sets of the same document.

Collating the output in document batches

You can print complete sets of a multiple-page document one set at a time (P1, P2, P1, P2 ...). If this function is not used when printing multiple sets, prints will be output in page batches (P1, P1, P2, P2 ...). This function is useful when, for example, making presentation materials.

Changing orientation or rotating the image

You can change the orientation of an image to portrait or landscape. You can also rotate the image by 180 degrees. Use rotation to prevent an image from being printed upside down when using paper with a predefined top and bottom (such as letterhead paper).

Printing multiple pages per sheet

You can print multiple pages onto one sheet of paper.

When using this function, a suitable reduction ratio is selected automatically based on the paper size and the number of pages you want to fit on each sheet.

Printing on both sides of paper (duplex printing)

You can print on both sides of paper.

Reducing or enlarging the document

You can reduce or enlarge documents by a specific ratio, from 25% to 400% in 1% increments.

You can also reduce or enlarge documents automatically to fit a specific paper size. This function is useful, for example, when printing Web pages.

If the [Enable Large Papers] option is selected, A3/11 × 17/B4/8K documents can be scaled to a size that the machine supports, so that it can then be printed out.

Not printing of blank pages

If a print job contains blank pages, they can be prevented from being printed.

Note that this setting has higher priority than [Blank Page Print] under printer feature settings of the control panel.

Printing with a cover page

You can add a cover page to the print job.

You can select to leave the cover page blank, or print the first page of the document on the cover page. If a cover page is inserted into a duplex job, you can print on its back side also.

Paper for the cover page can either be the same as or different from the remaining pages.

Printing on custom size paper

You can print using non-standard size paper by specifying the size of the paper as custom size.

To specify the custom paper size, select [Custom Paper Size] from the [Document Size:] list, and then click the [Custom Paper Size...] button in the lower part of the dialog box to configure the paper size.

Superimposing text on prints (watermark)

You can superimpose watermark text on prints. Various predefined watermarks are provided. You can also create your own watermarks.

Note

- Some of the functions described above might not be available depending on the printer driver or operating system. For details, see the printer driver Help.

4. Configuring the Machine Using the Control Panel

This chapter describes how to configure the machine using the control panel.

Basic Operation

1. **If you want to configure the machine's system settings, press the [Menu] key.**

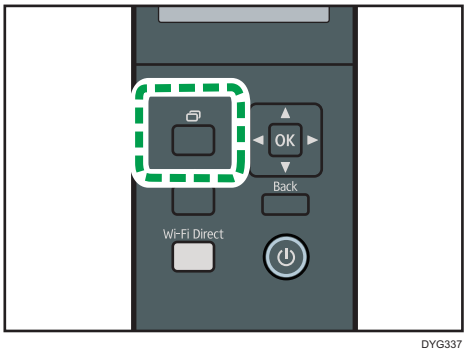

DYG337

2. **Press the [▲] or [▼] key to select the settings you want to use.**
3. **To confirm setting items and values displayed, press the [OK] key.**
4. **To go back to the previous item, press the [Back] key.**

Menu Chart

This section lists the parameters included in each menu.

For details about configuring the machine using Web Image Monitor, see page 94 "Using Web Image Monitor".

Important

- Some items might not appear depending on the model type or machine's configuration.
- Some items can also be configured using Web Image Monitor.

Admin. Tools

[Energy Saver Mode], [Language], [Reset Settings], [PCL6 Mode], [Admin. Tools Lock], [IPsec]

Printer Features

[List/Test Print], [System], [PCL Menu], [PS Menu]

System Settings

[I/O Timeout], [Auto Continue], [Toner Saving], [Supplies Status], [Printer Registration], [Low Humidity Mode], [Image Density]

Tray Paper Settings

[Paper Type: Tray 1], [Paper Type: Tray 2], [Paper Type: Bypass Tray], [Paper Size: Tray 1], [Paper Size: Tray 2], [Paper Size: Bypass Tray], [Bypass Tray Priority], [Paper Tray Priority], [Size Mismatch Detection]

Wi-Fi Setup Wizard

For details, see Setup Guide.

Network Settings

[Wired (Ethernet)], [Wireless (Wi-Fi)], [IPv4 Configuration], [IPv6 Configuration]

Print List/Report

[Configuration Page], [Maintenance Page]

Administrator Tools Menu

Energy Saver Mode 1

The machine enters Energy Saver mode 1 if the machine has been idle for about 30 seconds. It takes less time to recover from Energy Saver mode 1 than from power-off state or Energy Saver mode 2, but power consumption is higher in Energy Saver mode 1 than in Energy Saver mode 2.

Default: [**Off**]

- Off
- On (30 seconds)

Energy Saver Mode 2

The machine enters Energy Saver mode 2 after the period of time specified for this setting is passed. The machine consumes less power in Energy Saver mode 2 than in Energy Saver mode 1, but it takes longer to recover from Energy Saver mode 2 than from Energy Saver mode 1.

- Europe

  Default: [**30sec**]

  - On (1 to 20 minutes)
  - 30sec
  - Off
- Countries other than European countries

  Default: [**30sec**]

  - On (1 to 240 minutes)
  - 30sec
  - Off

Language

Specifies the language used on the screen and in reports.

The default value for this setting is the language you have specified during the Initial Setup, which is required after turning on the machine for the first time.

You can select the language you want to use. Available languages are as follows:

English, German, French, Italian, Spanish, Dutch, Swedish, Norwegian, Danish, Finnish, Portuguese,

Czech, Hungarian, Polish, Japanese, Simplified Chinese, Russian, Brazilian Portuguese,

Turkish, Traditional Chinese, Arabic, Kazakh

Reset Settings

Be sure not to clear the settings by mistake.

- Reset All Settings

Resets the machine's settings to their defaults except the following:

- Language settings
- Network settings

Press the [OK] key to execute. Press the [Back] key to exit to the previous level of the menu tree without clearing the settings.

- Reset Network Settings

  Resets the network settings to their defaults.

  Press the [OK] key to execute. Press the [Back] key to exit to the previous level of the menu tree without clearing the settings.

PCL6 Mode

Set this to [Universal] when using the Universal Driver and to [SP 330/2300/3700/3710] when using the normal driver.

Default: [**SP 330/2300/3700/3710**]

- Universal
- SP 330/2300/3700/3710

Admin. Tools Lock

Specifies a four-digit password for accessing the [Network Settings], [Wi-Fi Setup Wizard], and [Admin. Tools] menus.

Do not forget this password.

Default: [**Off**]

- On (0000 to 9999)
- Off

IPsec

Selects whether to enable or disable IPsec.

This function appears only when a password is specified under [Admin. Tools Lock].

Default: [**Inactive**]

- Inactive
- Active

Printer Features Menu

List/Test Print

Prints lists showing configurations on the machine.

The lists will be printed using the tray set for [Printer] under [Paper Tray Priority] in [Tray Paper Settings] on A4 or Letter size paper.

- Test Page

  Prints a test page for checking the single-sided printing condition. The test page contains network settings.

- PCL Font List

  Prints installed PCL font list.

- PS Font List

  Prints installed PostScript font list.

- Duplex Test Page

  Prints a test page for checking the duplex printing condition.

System

Copies

Sets the machine to print the specified number of sets.

This setting is disabled if the number of pages to print is specified by the printer driver.

Default: "**1**"

- 1 – 999

Sub Paper Size

Sets the printer to print onto paper of another size if the specified paper is not loaded in any tray.

Alternative sizes are preset to A4 and Letter.

Default: [**Off**]

- Off
- Auto

Default PageSize

Specifies the paper size to be used when the paper size is not specified in the print job.

Default: Region A (mainly Europe and Asia) [**A4**], Region B (mainly North America) [**8 1/2 × 11**]

- A4, 8 1/2 × 11, B5 JIS, B6 JIS, A5 LEF, A5 SEF, A6, 8 1/2 × 14, 8 1/2 × 13, 8 1/2 × 13 2/5, 8 1/2 × 13 3/5, 16K, 8.11 × 13.3, 5 1/2 × 8 1/2, 4 1/8 × 9 1/2, 3 7/8 × 7 1/2, DLEnv, C6 Env, C5 Env

Duplex

Sets the printer to print on both sides of paper according to the specified binding method.

Default: [**Off**]

- Off
- Short Edge Bind
- Long Edge Bind

Blank Page Print

Sets the printer to print blank pages.

Note that this setting has lower priority than the printer driver's blank page setting.

When cover sheet printing is enabled from the printer driver, cover sheets are inserted even if you select [Off].

Default: [**On**]

- On
- Off

Print Error Report

Sets the printer to print an error page when the printer detects a printer or memory error.

Default: [**Off**]

- On
- Off

PCL Menu

Specifies conditions when using PCL for printing.

- Orientation

  Specifies the page orientation.

  Default: [**Portrait**]

  - Portrait
  - Landscape

- Form Lines

  Specifies the number of lines per page between 5 and 128.

  Default: Region A (mainly Europe and Asia) [**64**], Region B (mainly North America) [**60**]

- Font Number

  Specifies the ID of the default font you want to use between 0 and 89.

Default: "**0**"

- Point Size

  Specifies the point size you want to use for the default font between 4.00 and 999.75 in 0.25 increments.

  Default: [**12.00 points**]

- Font Pitch

  Specifies the number of characters per inch you want to use for the default font between 0.44 and 99.99 in 0.01 increments.

  This setting is effective only for fixed-space fonts.

  Default: [**10.00 pitch**]

- Symbol Set

  Specifies the character set for the default font. Available sets are as follows: PC-8, PC-8 D/N,

  PC-850, PC-852, PC-858, PC8-TK, Win L1, Win L2, Win L5, Desktop, PS Text, VN Intl, VN US,

  MS Publ, Math-8, PS Math, VN Math, Pifont, Legal, ISO 4, ISO 6, ISO 11, ISO 15, ISO 17, ISO 21, ISO 60, ISO 69, Win 3.0, MC Text, ISO L6, ISO L9, PC-775, PC-1004, Win Balt, Roman-8,

  Roman-9, ISO L1, ISO L2, ISO L5

  Default: [**PC-8**]

- Courier Font

  Specifies a courier-type font.

  Default: [**Regular**]

  - Regular
  - Dark

- Ext.A4 Width

  Sets the printer to extend the width of the printable area of A4 size paper, reducing side margin width.

  Default: [**Off**]

  - Off
  - On

- Append CR to LF

  Sets the printer to append a CR code to each LF code to print text data clearly.

  Default: [**Off**]

  - Off
  - On

- Resolution

  Specifies the print resolution in dots per inch.

  Default: [**600 × 600 dpi**]

  - 600 × 600 dpi

PS Menu

- Resolution

  Specifies the print resolution in dots per inch.

  Default: [**600 × 600 dpi**]

  - 600 × 600 dpi
  - 1200 × 1200 dpi

System Settings Menu

I/O Timeout

- USB

  Specifies how many seconds the machine waits for print data, if the data is interrupted while it is being sent from the computer via USB. If the machine does not receive any more data within the time specified here, the machine only prints the data it has received. If printing is frequently interrupted by data from other ports, increase the timeout period.

  Default: [**60 sec.**]

  - 15 sec.
  - 60 sec.
  - 300 sec.

- Network

  Specifies how many seconds the machine waits for print data, if the data is interrupted while it is being sent from the computer via network. If the machine does not receive any more data within the time specified here, the machine only prints the data it has received. If printing is frequently interrupted by data from other ports, increase the timeout period.

  Default: [**15 sec.**]

  - 15 sec.
  - 60 sec.
  - 300 sec.

- Locked Print

  Specifies how many seconds the machine holds a new Locked Print file, when the machine cannot store any more Locked Print files. Within this time, you can print or delete the new Locked Print file. You can also print or delete an existing Locked Print file so that the new Locked Print file can be stored in the machine.

  Default: [**60 seconds**]

  - 0 to 300 seconds, in increments of 1 second

- Fixed USB Port

  Specifies whether the same printer driver can be used for multiple machines or not under USB connection.

  Default: [**Off**]

  - Off

    You must install the printer driver separately for individual machines, because the machine other than the original will be recognized as a new device upon USB connection.

- On

  The same printer driver you have installed in your computer can be used with any machine other than the one originally used for installation, if the machine is of the same model.

- Export to NFC

  Specifies whether or not to synchronize the data you have configured using the control panel and Web Image Monitor with the data stored in NFC.

  You can read and write the data in NFC by using RICOH Smart Device Connector.

  Default: [**On**]

  - Off

    Does not synchronize the data you have configured using the control panel and Web Image Monitor with the data stored in NFC.

  - On

    Synchronizes the data you have configured using the control panel and Web Image Monitor with the data stored in NFC.

Auto Continue

Sets the printer to ignore an error with paper size or type and continue printing. The printing stops temporarily when an error is detected, and restarts automatically after about ten seconds using the settings made on the control panel. However, if the size of paper specified on the control panel and that of the paper loaded in the paper tray or the paper size specified for the print job do not match when printing restarts, it may cause a paper jam.

Default: [**Off**]

- Off
- On

Toner Saving

Sets the machine to print using a reduced amount of toner.

Default: [**Off**]

- Off
- On

Supplies Status

Displays information about consumables. To replace the fusing unit, transfer roller, or paper feed roller, contact your sales or service representative.

- Print Cart.
- Fusing Unit
- Transfer Roller
- Paper Feed Roller

Printer Registration

Adjust the registration of each tray if necessary. You can adjust the registration value between -15 and +15 (that is, -1.5 and +1.5 mm, in 0.1 mm increments).

Default: **0** for all parameters

- Horiz.: Tray 1

  Select this to adjust the tray 1 registration horizontally.
- Vert.: Tray 1

  Select this to adjust the tray 1 registration vertically.
- Horiz.: Tray 2

  Select this to adjust the tray 2 registration horizontally.
- Vert.: Tray 2

  Select this to adjust the tray 2 registration vertically.
- Horiz.: Bypass Tray

  Select this to adjust the bypass tray registration horizontally.
- Vert.: Bypass Tray

  Select this to adjust the bypass tray registration vertically.
- Horiz.: Duplex: Back

  Select this to adjust the registration of the back of duplex printing horizontally.
- Vert.: Duplex: Back

  Select this to adjust the registration of the back of duplex printing vertically.

Low Humidity Mode

If the machine is used in a room where humidity level is low, black lines of a few millimeters thick may appear on printouts with 75-millimeter spaces in between. Selecting [On] for this setting may prevent these lines from appearing (wait for about one day until this setting becomes effective).

Note that when this setting is enabled, the machine automatically performs self-maintenance in every 10 minutes.

Default: [**Off**]

- Off
- On

Image Density

Adjusts the density of images on prints.

Default: [**0**]

- -3 to +3

Tray Paper Settings Menu

Paper Type: Tray 1

Specifies the paper type for Tray 1.

Default: [**Plain Paper**]

- Thin Paper, Plain Paper, Thick Paper 1, Recycled Paper, Color Paper, Letterhead, Preprinted, Prepunched, Label Paper, Bond Paper, Cardstock, Thick Paper 2, Special Paper

Paper Type: Tray 2

Specifies the paper type for Tray 2.

This setting appears only when the optional paper feed unit is installed.

Default: [**Plain Paper**]

- Thin Paper, Plain Paper, Thick Paper 1, Recycled Paper, Color Paper, Letterhead, Prepunched Paper, Preprinted Paper, Special Paper

Paper Type: Bypass Tray

Specifies the paper type for the bypass tray.

Default: [**Plain Paper**]

- Thin Paper, Plain Paper, Thick Paper 1, Recycled Paper, Color Paper, Letterhead, Prepunched Paper, Preprinted Paper, Label Paper, Bond Paper, Cardstock, Envelope, Thick Paper 2, Special Paper

Paper Size: Tray 1

Specifies the paper size for Tray 1.

Default: Region A (mainly Europe and Asia) [**A4**], Region B (mainly North America) [**8 1/2 x 11**]

- A4, B5 JIS, A5 SEF, 8 1/2 × 14, 8 1/2 × 11, 8 1/2 × 13, 16K, Custom Size, 5 1/2 × 8 1/2, B6 JIS, A6, A5 LEF, 8.5 × 13.4, 8.5 × 13.6, 8.11 × 13.3

Paper Size: Tray 2

Specifies the paper size for Tray 2.

This setting appears only when the optional paper feed unit is installed.

Default: Region A (mainly Europe and Asia) [**A4**], Region B (mainly North America) [**8 1/2 × 11**]

- A4, 8 1/2 × 11, B5 JIS, A5 SEF, 81/2 × 14, 8.5 × 13.4, 5 1/2 × 8 1/2

Paper Size: Bypass Tray

Specifies the paper size for the bypass tray.

Default: Region A (mainly Europe and Asia) [**A4**], Region B (mainly North America) [**8 1/2 × 11**]

- A4, B5 JIS, A5 SEF, 8 1/2 × 14, 8 1/2 × 11, 8 1/2 × 13, 16K, Custom Size, 4 1/8 × 9 1/2, 3 7/8 × 7 1/2, C5 Env, C6 Env, DL Env, 5 1/2 × 8 1/2, B6 JIS, A6, A5 LEF, 8.5 × 13.4, 8.5 × 13.6, 8.11 × 13.3

Bypass Tray Priority

Specifies how print jobs using the bypass tray are handled.

Default: [**Machine Setting(s)**]

- Machine Setting(s)

  The paper settings configured on the machine's control panel are applied to all print jobs. An error occurs when the paper settings specified by the printer driver or the print command do not match the machine's settings.

- Any Size/Type

  Printing proceeds even if the paper size/type settings of the printer and printer driver do not match. However, if the paper is too small for the print job, the printed image will be cropped.

- Any Custom Size/Type

  The printer prints custom size print jobs according to the printer driver’s settings and prints standard size print jobs according to the printer's settings.

  For custom size print jobs, printing proceeds even if the paper size/type settings of the printer and printer driver do not match. However, if the paper is too small for the print job, the printed image will be cropped.

  For standard size print jobs, an error will occur if the paper size/type settings of the printer and printer driver do not match.

Paper Tray Priority

Specifies the tray that the printer uses first for printer jobs.

If multiple trays contain valid paper, the first tray the printer finds will be used for printing; when that tray runs out of paper, the printer automatically switches to the next tray to continue printing.

[Tray 2] appears only when the optional paper feed unit is installed.

Default: [**Tray 1**]

- Tray 1
- Tray 2
- Bypass Tray

Size Mismatch Detection

Sets the machine to report an error if the paper size does not match the print job's settings.

Default: [**Off**]

- On
- Off

Wi-Fi Setup Wizard

You can enable wireless connections by following the wizard's instructions. For details, see Setup Guide.

If [Enable Wireless (Wi-Fi)] in [Wireless (Wi-Fi)] under [Network Settings] is set to [Disable], the Wi-Fi Setup Wizard does not appear.

Network Settings Menu

Wired (Ethernet)

- MAC Address

  Displays the machine's MAC address.

- Ethernet Speed

  Displays the current Ethernet speed setting.

  - 100Mbps Full Duplex
  - 100Mbps Half Duplex
  - 10Mbps Full Duplex
  - 10Mbps Half Duplex
  - Ethernet Unavailable

    Appears when a network cable is not connected.

- Set Ethernet Speed

  Specifies the speed for Ethernet communication. Select a speed that matches your network environment.

  For most networks, the default setting is the optimum setting.

  Default: [**Auto Select**]

  - Auto Select
  - 100Mbps Full Duplex
  - 100Mbps Half Duplex
  - 10Mbps Full Duplex
  - 10Mbps Half Duplex

Wireless (Wi-Fi)

- Enable Wireless (Wi-Fi)

  Select whether to enable or disable Wireless LAN.

  If [Disable] is set, [Wireless (Wi-Fi) Status], [MAC Address], [Current Connection], and [Setup Wizard] are not displayed.

  Default: [**Disable**]

  - Disable
  - Enable

- Wireless (Wi-Fi) Status

  Displays the current connection status.

- MAC Address

Displays the machine's MAC address.

- Current Connection

  Displays detailed information about the connection, such as the SSID and the wireless signal strength.

- Input SSID

  Input the SSID of the machine.

- WPS

  Connects with one touch using WPS (Wi-Fi Protected Setup). For details, see Setup Guide.

  - PBC
  - PIN

- Wi-Fi Direct

  Input the SSID of the machine to configure Wi-Fi Direct.

- WiFi Direct PSW

  Input SSID to set a password for Wi-Fi Direct.

- Wireless Type

  Select 2.4 GHz or 5 GHz as the wireless LAN frequency.

  Default: [**2.4 GHz**]

  - 2.4 GHz
  - 5 GHz

- Connection Mode

  Select wireless (Wi-Fi) or wired (Ethernet) as the method to connect to the machine.

IPv4 Configuration

- DHCP

  Sets the machine to receive its IPv4 address, subnet mask, and default gateway address automatically from a DHCP server.

  Default: [**Active**]

  - Active
  - Inactive

- IP Address

  Specifies the machine's IPv4 address when DHCP is not used.

  Use this menu to check the current IP address when DHCP is used.

  Default: XXX.XXX.XXX.XXX

  The numbers represented by "X" vary according to your network environment.

- Subnet Mask

Specifies the machine's subnet mask when DHCP is not used.

Use this menu to check the current subnet mask when DHCP is used.

Default: XXX.XXX.XXX.XXX

The numbers represented by "X" vary according to your network environment.

- Gateway Address

  Specifies the machine's default gateway address when DHCP is not used.

  Use this menu to check the current default gateway address when DHCP is used.

  Default: XXX.XXX.XXX.XXX

  The numbers represented by "X" vary according to your network environment.

- IP Address Method

  Displays the IP address acquisition method.

  - DHCP
  - Auto IP
  - Manual Config.
  - Default IP

- Wi-Fi Direct IP Addr

  Displays the IP address of Wi-Fi Direct.

IPv6 Configuration

- IPv6

  Selects whether to enable or disable IPv6.

  Default: [**Inactive**]

  - Active
  - Inactive

- DHCP

  Sets the printer to receive its IPv6 address from a DHCP server.

  When DHCP is used, you cannot specify the IPv6 address manually.

  Default: [**Active**]

  - Inactive
  - Active

- IP Address (DHCP)

  Displays the IPv6 address obtained from a DHCP server.

- Manual Config. Address

  - Manual Config. Address

Specifies the machine's IPv6 address when DHCP is not used. Can contain up to 39 characters.

- Prefix Length

  Specifies the prefix length, using a value between 0 and 128.

- Gateway Address

  Specifies the IPv6 address of the default gateway. Can contain up to 39 characters.

- Stateless Address

  Displays the IPv6 stateless addresses obtained from a Router Advertisement

  - Address 1
  - Address 2
  - Address 3
  - Address 4

- Link-local Ad.

  Displays the IPv6 link local address.

List/Test Print Menu

Printing the Configuration Page

1. **Press the [Menu] key.**

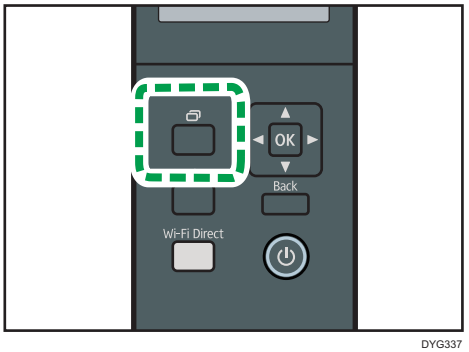

DYG337

The menu screen appears.

2. **Press the [▲] or [▼] key to select [List/Test Print], and then press the [OK] key.**
3. **Press the [▲] or [▼] key to select [Config. Page], and then press the [OK] key.**

The configuration page is printed. The [List/Test Print] screen appears on completion of printing.

Types of Lists/Reports

Note

- The lists will be printed using the tray set for [Paper Tray Priority] in paper input settings on A4 or Letter size paper.

Config. Page

Prints general information and the current configurations of the printer.

Maintenance Pg.

Prints the maintenance page.

5. Configuring the Machine Using Utilities

This chapter describes how to configure the machine using utilities.

Available Setting Functions Using Web Image Monitor and Smart Organizing Monitor

Use Web Image Monitor or Smart Organizing Monitor to change the configuration of the machine from a computer.

Available operations for Web Image Monitor and Smart Organizing Monitor are as follows:

Available operations	Web Image Monitor	Smart Organizing Monitor
Checking the system settings	Available	Available
Configuring paper settings	Available	Available
Configuring the priority tray	Available	Available
Configuring toner saving	Available	Unavailable
Configuring interface settings	Available	Available
Checking the network settings	Available	Available
Configuring IPsec settings	Available	Available
Configuring Energy Saver Mode	Available	Available
Configuring administrator settings	Available	Unavailable
Printing lists/reports	Available	Available

Using Web Image Monitor

Important

- Some items might not appear, depending on the model type you are using.
- Some items can also be configured using the control panel.

Recommended web browsers

- Internet Explorer 6 or later
- Firefox 3.0 or later
- Safari 4.0 or later

Note

- To operate the machine via Web Image Monitor, you must first configure the machine's TCP/IP or wireless LAN settings. For details, see page 87 "Network Settings Menu" or see page 104 "Configuring the Network Settings".

Displaying Top Page

When you access the machine using Web Image Monitor, the top page appears in your browser's window.

1. **Launch the Web browser.**
2. **In the Web browser's address bar, enter "http://(machine's IP address)/" to access the machine.**

   If a DNS server is used and the machine's host name has been specified, you can enter the host name instead of the IP address.

   The top page of Web Image Monitor appears.

Top page

Every Web Image Monitor page is divided into the following areas:

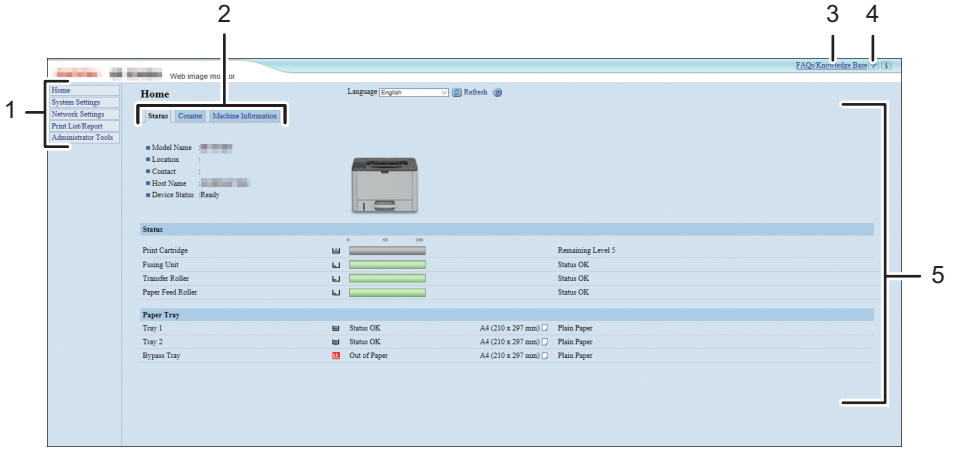

DYG345

1. Menu area

   Clicking a menu shows its contents in the main area.

2. Tab area

   Contains tabs for switching between information and settings you want to see or configure.

3. FAQs/Knowledge Base

   Provides answers to frequently asked questions and other useful information about using this machine.

   An internet connection is required to view this information.

4. Help

If you click this icon, help index page opens.

5. Main area

   Displays the contents of the item selected in the menu area.

   Information in the main area is not automatically updated. Click [Refresh] at the upper-right in the main area to update the information. Click the Web browser's [Refresh] button to refresh the entire browser screen.

Note

- If you use an older version of a supported Web browser or the Web browser has JavaScript and cookies disabled, display and operation problems may occur.
- If you are using a proxy server, configure the Web browser settings as necessary. For details about the settings, contact your network administrator.
- The previous page may not appear even if the back button of the Web browser is clicked. If this happens, click the refresh button of the Web browser.
- The FAQs (Frequently Asked Questions)/Knowledge Base are not available in certain languages.

Changing the Interface Language

Select the desired interface language from the [Language] list.

Installing the Help Source File

Follow the procedure below to install the help.

1. **Copy the [WIMHELP] folder on the CD-ROM to your computer's hard drive.**

   The example procedures explain how to copy the [WIMHELP] folder to the C:\tmp\WIMHELP directory.

2. **Access Web Image Monitor, and then click [Help Source File Setting] on the [Administrator Tools] page.**
3. **In the text box, enter "C:\tmp\WIMHELP\".**
4. **Enter the administrator password if required.**
5. **Click [OK].**

Displaying Help

To use Help for the first time, you need to install its source file from the CD-ROM provided with this printer.

Note

- By clicking ?, the Help icon in the header area, the contents of Help appear.
- By clicking ?, the Help icon in the main area, Help for the setting items in the main area appears.

Checking the System Information

Click [Home] to display the main page of Web Image Monitor. You can check the current system information on this page.

This page contains three tabs: [Status], [Counter], and [Machine Information].

Status Tab

Item	Description
Model Name	Shows the name of the machine.
Location	Shows the location of the machine as registered on the [SNMP] page.
Contact	Shows the contact information of the machine as registered on the [SNMP] page.
Host Name	Shows the host name specified in [Host Name] on the [DNS] page.
Device Status	Shows the current messages on the machine's display.

Status

Item	Description
Print Cartridge	Shows the amount of toner remaining.
Fusing Unit	Shows the remaining life of the fusing unit, as "Status OK", "Replacement Required Soon" or "Replacement Required". For replacing, contact your sales or service representative.
Transfer Roller	Shows the remaining life of the transfer roller, as "Status OK", "Replacement Required Soon" or "Replacement Required". For replacing, contact your sales or service representative.
Paper Feed Roller	Shows the remaining life of the paper feed roller, as "Status OK", "Replacement Required Soon" or "Replacement Required". For replacing, contact your sales or service representative.

Paper Tray

Item	Description
Tray 1	Shows the current state and paper size/type setting of Tray 1.

Item	Description
Tray 2	Shows the current state and paper size/type setting of Tray 2.
Bypass Tray	Shows the current state and paper size/type setting of the bypass tray.

Note

- If a non-genuine print cartridge is installed, toner life cannot be reliably indicated.
- The information about Tray 2 appears only when it is installed.

Counter Tab

Duplex

Item	Description
Duplex Total Page	Shows the total number of sheets printed on both sides.

Note

- A sheet printed on both sides counts as two printed pages.

Machine Information Tab

Machine Information

Item	Description
Firmware Version	Shows the version of firmware installed on the machine.
Engine FW Version	Shows the version of firmware for the machine engine.
Machine ID	Shows the identification number of the machine.
Total Memory	Shows the total memory installed on the machine.

Configuring the System Settings

Click [System Settings] to display the page for configuring the system settings.

This page contains the following tabs: [Tray Paper Settings], [Supply End Option] and [Interface].

Tray Paper Settings Tab

Tray 1

Item	Description
Paper Size	Select the paper size for Tray 1 from the following: A4, B5 JIS, A5 (148 × 210 mm), A5 (210 × 148 mm), B6 JIS, A6, 8 1/2 × 14, 8 1/2 × 11, 5 1/2 × 8 1/2, 8 1/2 × 13, 16K, 8.5 × 13.4, 8.5 × 13.6, 8.11 × 13.3, Custom Size
Paper Type	Select the paper type for Tray 1 from the following: Thin Paper (52 to 64g/m2), Plain Paper, Thick Paper 1 (100 to 130g/m2), Recycled Paper, Color Paper, Letterhead, Preprinted Paper, Prepunched Paper, Label Paper, Bond Paper, Cardstock, Thick Paper 2 (131 to 162g/m2), Special Paper

Tray 2

Item	Description
Paper Size	Select the paper size for Tray 2 from the following: A4, 8 1/2 × 11, B5 JIS, A5 (148 × 210 mm), 8.5 × 14, 8.5 × 13.4, 5.5 × 8.5
Paper Type	Select the paper type for Tray 2 from the following: Thin Paper (52 to 64g/m2), Plain Paper, Thick Paper 1 (100 to 130g/m2), Recycled Paper, Color Paper, Letterhead, Preprinted Paper, Prepunched Paper, Special Paper

Bypass Tray

Item	Description
Paper Size	Select the paper size for the bypass tray from the following: A4, B5 JIS, A5 (148 × 210 mm), A5 (210 × 148 mm), B6 JIS, A6, 8 1/2 × 14, 8 1/2 × 11, 5 1/2 × 8 1/2, 8 1/2 × 13, 16K, 4 1/8 × 9 1/2, 3 7/8 × 7 1/2, C5 Env, C6 Env, DL Env, 8.5 × 13.4, 8.5 × 13.6, 8.11 × 13.3, Custom Size
Paper Type	Select the paper type for the bypass tray from the following: Thin Paper (52 to 64g/m2), Plain Paper, Thick Paper 1 (100 to 130g/m2), Recycled Paper, Color Paper, Letterhead, Preprinted Paper, Prepunched Paper, Label Paper, Bond Paper, Cardstock, Envelope, Thick Paper 2 (131 to 162g/m2), Special Paper

Priority Tray

Item	Description
Priority Tray	Select the tray that the printer uses first for printer jobs from Tray 1, Tray 2, or bypass tray. If automatic tray selection is specified for the print job and both Tray 1 and Tray 2 contain paper that matches the print job, the printer starts to print from the specified tray. If that tray runs out of paper, the printer automatically switches to the other tray to continue printing.

Bypass Tray Setting Priority

Item	Description
Bypass Tray Setting Priority	Select how print jobs using the bypass tray are handled. • System Settings The paper settings configured on the machine's control panel are applied to all print jobs. An error occurs when the paper settings specified by the printer driver or the print command do not match the machine's settings. • Any Size/Type Printing proceeds even if the paper size/type settings of the machine and printer driver do not match, but if the paper is too small for the print job, the printed image will be cropped. • Any Custom Size/Type The machine prints custom size print jobs according to the printer driver's settings and prints standard size print jobs according to the machine's settings. For custom size print jobs, printing proceeds even if the paper size/type settings of the machine and printer driver do not match, but if the paper is too small for the print job, the printed image will be cropped. For standard size print jobs, an error will occur if the paper size/type settings of the machine and printer driver do not match.

Size mismatch detection

Item	Description
Size mismatch detection	Select whether to set the machine to report an error if the paper size does not match the print job's settings.

Note

- The information about Tray 2 appears only when it is installed.

Interface Tab

Interface

Item	Description
Fixed USB Port	Specifies whether the same printer can be used for multiple machines or not under USB connection. If this setting is enabled, the same printer driver you have installed in your computer can be used with any machine other than the one originally used for installation, if the machine is of the same model. If disabled, you must install the printer driver separately for individual machines, because the machine other than the original will be recognized as a new device upon USB connection.
Export to NFC	Specifies whether or not to synchronize the data you have configured using the control panel and Web Image Monitor with the data stored in NFC. You can read and write the data in NFC by using RICOH Smart Device Connector.
Locked Print Timeout (seconds)	Specifies how many seconds the machine holds a new Locked Print file, when the machine cannot store any more Locked Print files (0 to 300 seconds). Within this time, you can print or delete the new Locked Print file. You can also print or delete an existing Locked Print file so that the new Locked Print file can be stored in the machine.

Configuring the Network Settings

Click [Network Settings] to display the page for configuring the network settings.

This page contains the following tabs: [Network Status], [IPv6 Configuration], [Network Application], [DNS], [Auto E-mail Notification], [SNMP], [SMTP], [POP3], and [Wireless].

Important

- **Depending on the settings you change, the machine might need to be restarted.**
- **Depending on the model you are using, some items might not appear.**

Network Status Tab

General Status

Item	Description
Ethernet Speed	Shows the type and speed of the network connection.
IPP Printer Name	Shows the name used to identify the machine on the network.
Network Version	Shows the version of the machine's network module (a part of the machine firmware).
Ethernet MAC Address	Shows the Ethernet MAC address of the machine.
Active Interface	Shows the active communication method.
Wi-Fi Direct IP Address	Shows the IP address of Wi-Fi Direct.

TCP/IP Status

Item	Description
DHCP	Select whether the machine should receive a dynamic IPv4 address automatically using DHCP. To use DHCP, select [Active]. When enabled, the items below cannot be configured.
IP Address	Enter the IPv4 address for the machine.
Subnet Mask	Enter the subnet mask of the network.
Gateway	Enter the IPv4 address of the network gateway.

IPv6 Configuration Tab

IPv6

Item	Description
IPv6	Select whether to enable or disable IPv6. You cannot disable IPv6 using Web Image Monitor if the machine is currently in use in an IPv6 environment. In this case, use the control panel to disable [IPv6] under network settings. When disabled, [DHCP], [Manual Configuration Address], [Prefix Length], and [Gateway Address] below cannot be configured.

IPv6 Address

Item	Description
DHCP	Select whether or not the machine obtains its IPv6 address from a DHCP server.
IP Address (DHCP)	Displays the IPv6 address obtained from the DHCP server when [DHCP] is set to [Active].
Stateless Address	Displays up to four stateless auto addresses.
Gateway Address	Displays the machine's default gateway address.
Link-local Address	Displays the link local address of the machine. The link local address is an address that is valid only inside the local network (local segment).
Manual Configuration Address	Enter the machine's IPv6 address. Can contain up to 39 characters.
Prefix Length	Enter the prefix length, using a value between 0 and 128.
Gateway Address	Enter the default gateway's IPv6 address. Can contain up to 39 characters.

Network Application Tab

Network Print Setting

Item	Description
IPP	Select to enable network printing using Internet Print Protocol (via TCP port 631/80).

Item	Description
FTP	Select to enable network printing using an embedded FTP server in the machine (via TCP port 20/21).
RAW	Select to enable network raw printing.
Port No.	Enter the TCP port number to use for raw printing. The valid range is 1024 to 65535, except 5222, 5353, 6006, 28900, 29102, 49999, and 53550 (default is 9100).
LPR	Select to enable network printing using LPR/LPD (via TCP port 515).

mDNS Setting

Item	Description
mDNS	Select to enable Multicast DNS (via UDP port 5353). If disabled, the item below cannot be configured.
Printer Name	Enter the name of the machine. Can contain up to 32 characters.

DNS Tab

DNS

Item	Description
DNS Method	Select whether to specify domain name servers manually or receive DNS information from the network automatically. When set to [Auto-Obtain (DHCP)], [Primary DNS Server], [Secondary DNS Server], and [Domain Name] below become unavailable.
Primary DNS Server	Enter the IPv4 address of the primary DNS.
Secondary DNS Server	Enter the IPv4 address of the secondary DNS.
Domain Name	Enter the IPv4 domain name for the machine. Can contain up to 32 characters.
IPv6 DNS Method	Select whether to specify the domain server manually or have the machine obtain its DNS information automatically. When set to [Auto-Obtain (DHCP)], [Primary IPv6 DNS Server], [Secondary IPv6 DNS Server], and [IPv6 Domain Name] below become unavailable.

Item	Description
Primary IPv6 DNS Server	Enter the IPv6 address of the primary IPv6 DNS server. Can contain up to 39 characters.
Secondary IPv6 DNS Server	Enter the IPv6 address of the secondary IPv6 DNS server. Can contain up to 39 characters.
IPv6 Domain Name	Enter the IPv6 domain name of the machine. Can contain up to 32 characters.
DNS Resolve Priority	Select whether to give priority to IPv4 or IPv6 for DNS name resolution.
DNS Timeout (seconds)	Enter the number of seconds the machine waits before considering a DNS request to have timed out (1 to 999 seconds).
Host Name	Enter a host name for the machine. Can contain up to 15 characters.

Auto E-mail Notification Tab

E-mail Notification 1/E-mail Notification 2

Item	Description
Display Name	Enter a sender name for notification e-mail. Can contain up to 32 characters.
E-mail Address	Enter the address of the recipient of the alert email. Can contain up to 64 characters.
Paper Misfeed	Select to send an alert e-mail to the specified address if a paper jam occurs.
Out of Paper	Select to send an alert e-mail to the specified address if paper runs out.
Replace Print Cartridge Soon	Select to send an alert e-mail to the specified address if toner becomes low.
Call Service	Select to send an alert e-mail to the specified address if the machine requires servicing.
Replace Print Cartridge	Select to send an alert e-mail to the specified address if toner runs out.
Cover Open	Select to send an alert e-mail to the specified address if a cover is open.

SNMP Tab

SNMP

Item	Description
SNMP	Select whether to enable the machine to use SNMP services.

Trap

Item	Description
Target Trap	Select whether to enable the machine to send traps to the management host (NMS). When disabled, [SNMP Management Host 1] and [SNMP Management Host 2] below become unavailable.
SNMP Management Host 1	Enter the IP address or host name of a management host. Can contain up to 64 characters.
SNMP Management Host 2	Enter the IP address or host name of a management host. Can contain up to 64 characters.

Community

Item	Description
Get Community	Enter the community name to use for authentication of Get requests. Can contain up to 32 characters.
Trap Community	Enter the community name to use for authentication of Get requests. Can contain up to 15 characters.

System

Item	Description
Location	Enter the location of the machine. The location entered here is displayed on the main page. Can contain up to 64 characters.
Contact	Enter the contact information of the machine. The contact information entered here is displayed on the main page. Can contain up to 64 characters.

SMTP Tab

SMTP

Item	Description
Primary SMTP Server	Enter the IP address or host name of the SMTP/POP3 server. Can contain up to 64 characters.
Port No.	Enter the port number for SMTP (1 to 65535).
Authentication Method	Select an authentication method from the following: [Anonymous]: The user name and password are not necessary. [SMTP]: The machine supports NTLM and LOGIN authentication. [POP before SMTP]: The POP3 server is used for authentication. When sending e-mails to an SMTP server, you can enhance the SMTP server security level by connecting to the POP server for authentication.
User Name	Enter the user name for logging in to the SMTP server. Can contain up to 32 characters.
Password	Enter the password for logging in to the SMTP server. Can contain up to 32 characters.
Device E-mail Address	Enter the machine's e-mail address. This address is used as the sender's address of e-mail messages sent from this machine, such as notification e-mails. Can contain up to 64 characters.
Server Timeout (seconds)	Enter the number of seconds the machine waits before considering an SMTP operation to have timed out (1 to 999).

POP3 Tab

POP3 Settings

Item	Description
POP3 Server	Enter the IP address or host name of the POP3 server for e-mail reception. The POP3 server specified here will be used for [POP before SMTP]. Can contain up to 64 characters.
User Account	Enter the user name for logging in to the POP3 server. Can contain up to 32 characters.

Item	Description
User Password	Enter the password for logging in to the POP3 server. Can contain up to 32 characters.
Authentication	Select an authentication method from the following: [None]: Password will not be encrypted. [APOP Authentication]: Password will be encrypted. [Auto]: Password will be encrypted or not encrypted according to the POP3 server's settings.

Wireless Tab

Wireless LAN Status

Item	Description
Wireless LAN Status	Displays the status of the connection to the wireless LAN.
MAC Address	Displays the MAC address.
Communication Mode	Displays the communication mode that the machine is connecting in.
SSID	Displays the SSID of the access point that the machine is connected to.
Wireless Signal Status	Displays the strength of the wireless signal that is being received.
Wireless	Specifies whether or not to use the wireless LAN.

Wireless LAN Settings

Item	Description
SSID	Enter the SSID of the access point. The SSID can contain up to 32 characters. When you click [Scan List], a list of available access points is displayed. You can select the SSID from the list.
Communication Mode	[Infrastructure] is selected by default. Therefore, connect the machine to a wireless router or access point.
Authentication	Select an authentication method.
Encryption	Select an encryption method.

Item	Description
WPA Passphrase	If [WPA2-PSK] or [Mixed Mode WPA/WPA2] is selected for [Authentication], enter the WPA encryption key.
WEP Key Length	If [WEP] is selected for [Encryption], select 64 bits or 128 bits for the length of the encryption key.
WEP Transmit Key ID	Select an ID number to identify each WEP key in case multiple WEP connections are configured.
WEP Key Format	Select a format for entering the WEP key.
WEP Key	Enter the WEP key. The number and type of characters you can enter vary depending on the length and format selected for the key. See the following: • WEP key length: [64bit], Format: [Hexadecimal] WEP key max length: 10 characters (0-9, A-F, a-f) • WEP key length: [64bit], Format: [ASCII] WEP key max length: 5 characters (0x20-0x7e) • WEP key length: [128bit], Format: [Hexadecimal] WEP key max length: 26 characters (0-9, A-F, a-f) • WEP key length: [128bit], Format: [ASCII] WEP key max length: 13 characters (0x20-0x7e)

Note

- If you are configuring the connection settings manually, check the SSID, authentication method, or encryption key of the access point or wireless router in advance.

Wi-Fi Direct Settings

Item	Description
SSID	Enter the SSID name. The SSID can contain up to 32 characters.
Wireless (Wi-Fi) Type	Select 2.4 GHz or 5 GHz as the wireless LAN frequency.
WPA Passphrase	Enter the passphrase for Wi-Fi Direct connection. You can enter 8 to 32 characters for a passphrase.

Google Cloud Tab

Google Cloud

Item	Description
Google Cloud Print	Specify whether to enable Google Cloud Print. When Google Cloud Print is disabled, [Local Discovery] and [Timeout (seconds)] below cannot be configured.
Registration Status	Displays the status of Google Cloud Print registration.
Registration Account	Displays the Account (e-mail address) of Google Cloud Print registration.
Local Discovery	Specify whether to enable local discovery.
Timeout (seconds)	Enter the number of seconds the machine waits before an XMPP connection times out.

Airprint Tab

Airprint

Item	Description
Airprint	Select whether to enable or disable AirPrint. If [Inactive] is set, you cannot set the following items.
AirPrint Use TLS	Select whether or not to connect to the machine via TLS when using AirPrint.
Printer Name	Input the machine name. The name can have up to 32 characters. The "product name XXX" (XXX is the last three bytes of the Ethernet Mac address) has already been entered by factory default.
Location	Input the location of the machine. If you change the setting in this item, the setting for [Location] in the [SNMP] tab is also changed.
Latitude	Input the latitude of the machine's location.
Longitude	Input the longitude of the machine's location.
Altitude	Input the altitude of the machine's location.

Certificate Tab

You can use the following two types of certificates on this machine:

- Certificate created by the machine itself.
- Certificate issued by a certification authority.

Only one certificate can be installed on the machine.

If you execute [Create New Self-Signed Certificate], [Create Certificate Request], [Install Certificate], or [Import Certificate and Private Key], the existing certificate that has already been installed on the machine is deleted.

Follow the procedure below to set items:

1. Check the item you want to set.
2. Enter the password if required.
3. Click [Next].

Certificate

Item	Description
Create New Self-Signed Certificate	Select this item to create a new self-signed certificate.
Create Certificate Request	Select this item to request the certification authority to issue a new certificate. You can submit a certificate created using this setting to the certificate authority. Note that you cannot submit a certificate to the certification authority directly via Web Image Monitor.
Install Certificate	Select this item to install the certificate issued by the certification authority.
Import Certificate and Private Key	Select this item to install the certificate created by the machine itself. You can use certificates that are in the following formats: • PEM • PKCS12
Export Certificate	Select this item to back-up the certificate that is installed on the machine. The certificate is exported in PKCS12 format.
View Certificate	Select this item to check details about the certificate that is installed on the machine.

Create New Self-Signed Certificate

Item	Description
Common Name (Required)	Enter the common name of the certificate. The name can have up to 32 characters.
Organization (Optional)	Enter the name of the organization requesting the certificate (company or group name). The name can have up to 32 characters.
Organizational Unit (Optional)	Enter the name of the department requesting the certificate (company or group name). The name can have up to 32 characters.
City/Locality (Optional)	Enter the name of the city or town where the machine is located. The name can have up to 32 characters.
State/Province (Optional)	Enter the name of the state of province where the machine is located. The name can have up to 32 characters.
Country/Region (Optional)	Enter the two-character country code for where the machine is located.
Validity Period (days) (Required)	Enter the four-digit validity period. For example, if the validity period is a year, enter "0365".

Create Certificate Request

Item	Description
Common Name (Required)	Enter the common name of the certificate. The name can have up to 32 characters.
Organization (Optional)	Enter the name of the organization requesting the certificate (company or group name). The name can have up to 32 characters.
Organizational Unit (Optional)	Enter the name of the department requesting the certificate (company or group name). The name can have up to 32 characters.
City/Locality (Optional)	Enter the name of the city or town where the machine is located. The name can have up to 32 characters.
State/Province (Optional)	Enter the name of the state of province where the machine is located. The name can have up to 32 characters.
Country/Region (Optional)	Enter the two-character country code for where the machine is located.

Install Certificate

Item	Description
File Name	Click [Browse...], and then select the certificate to install.

Import Certificate and Private Key

Item	Description
File Name	Click [Browse...], and then select the certificate to install.
Password	Enter the password of the private key.

Export Certificate

Item	Description
Password	Enter the password of the private key. The password has at least 4, and up to 32 characters.
Confirm Password	Enter the same password as for [Password].

Configuring the IPsec Settings

Click [IPsec Settings] to display the page for configuring the IPsec settings.

This page contains the following tabs: [IPsec Global Settings] and [IPsec Policy List].

Important

- **This function is available only when an administrator password is specified.**

IPsec Global Settings Tab

Item	Description
IPsec Function	Select whether to enable or disable IPsec.
Default Policy	Select whether to allow for the default IPsec policy.
Broadcast and Multicast Bypass	Select the services that you do not want to apply IPsec from the following: [DHCPv4], [DHCPv6], [SNMP], [mDNS], [NetBIOS], [UDP Port 53550]
All ICMP Bypass	Select whether to apply IPsec to ICMP packets (IPv4 and IPv6) from the following: [Active]: All ICMP packets will be bypassed without IPsec protection. "ping" command (echo request and echo reply) is not encapsulated by IPsec. [Inactive]: Some ICMP message types will be bypassed without IPsec protection.

IPsec Policy List Tab

Item	Description
No.	IPsec policy number.
Name	Displays the name of the IPsec policy.
Address Settings	Displays the IP address filter of the IPsec policy as below: Remote address/Prefix length
Action	Displays the action of the IPsec policy as "Allow", "Drop", or "Require Security".

Item	Description
Status	Displays the status of the IPsec policy as "Active" or "Inactive".

To configure IPsec policies, select the desired IPsec policy, and then click [Change] to open the "IPsec Policy Settings" page. The following settings can be made on the "IPsec Policy Settings" page.

IP Policy Settings

Item	Description
No.	Specify a number between 1 and 10 for the IPsec policy. The number you specify will determine the position of the policy in the IPsec Policy List. Policy searching is performed according to the order of the list. If the number you specify is already assigned to another policy, the policy you are configuring will take the number of the earlier policy, and the earlier policy and any subsequent policies will be renumbered accordingly.
Activity	Select whether to enable or disable the policy.
Name	Enter the name of the policy. Can contain up to 16 characters.
Address Type	Select IPv4 or IPv6 as the type of IP address to be used in IPsec communication.
Local Address	Displays the IP address of this printer.
Remote Address	Enter the IPv4 or IPv6 address of the device with which to communicate. Can contain up to 39 characters.
Prefix Length	Enter the prefix length of the Remote Address, using a value between 1 and 128. If this setting is left blank, "32" (IPv4) or "128" (IPv6) will be automatically selected.
Action	Specify how the IP packets are processed from the following: • [Allow]: IP packets are both sent and received without IPsec applied to them. • [Drop]: IP packets are discarded. • [Require Security]: IPsec is applied to IP packets that are both sent and received. If you have selected [Require Security], you must configure [IPsec Settings] and [IKE Settings].

IPsec Settings

Item	Description
Encapsulation Type	Specify the encapsulation type from the following: • [Transport]: Select this mode to secure only the payload section of each IP packet when communicating with IPsec compliant devices. • [Tunnel]: Select this mode to secure every section of each IP packet. We recommend this type for communication between security gateways (such as VPN devices).
Security Protocol	Select the security protocol from the following: • [AH]: Establishes secure communication that supports authentication only. • [ESP]: Establishes secure communication that supports both authentication and data encryption. • [ESP&AH]: Establishes secure communication that supports both data encryption and authentication of packets, including packet headers. Note that you cannot specify this protocol when [Tunnel] is selected for [Encapsulation Type].
Authentication Algorithm for AH	Specify the authentication algorithm to be applied when [AH] or [ESP&AH] is selected for [Security Protocol] from the following: [MD5], [SHA1]
Encryption Algorithm for ESP	Specify the encryption algorithm to be applied when [ESP] or [ESP&AH] is selected for [Security Protocol] from the following: [None], [DES], [3DES], [AES-128], [AES-192], [AES-256]
Authentication Algorithm for ESP	Specify the authentication algorithm to be applied when [ESP] is selected for [Security Protocol] from the following: [MD5], [SHA1]
Life Time	Specify the life time of the IPsec SA (Security Association) as a time period or data volume. The SA will expire when the time period you specify elapses or the volume of data you specify reaches the volume carried. If you specify both a time period and a data volume, the SA will expire as soon as either is reached, and a new SA will then be obtained by negotiation. To specify the life time of the SA as a time period, enter a number of seconds. To specify the life time of the SA as a data volume, enter a number of KBs.

Item	Description
Key Perfect Forward Secrecy	Select whether to enable or disable PFS (Perfect Forward Secrecy).

IKE Settings

Item	Description
IKE Version	Displays the IKE version.
Encryption Algorithm	Specify the encryption algorithm from the following: [DES], [3DES], [AES-128], [AES-192], [AES-256]
Authentication Algorithm	Specify the authentication algorithm from the following: [MD5], [SHA1]
IKE Life Time	Specify the life time of the ISAKMP SA as a time period. Enter a number of seconds.
IKE Diffie-Hellman Group	Select the IKE Diffie-Hellman Group to be used in the generation of the IKE encryption key from the following: [DH1], [DH2]
Pre-Shared Key	Specify the PSK (Pre-Shared Key) to be used for authentication of a communicating device. Can contain up to 32 characters.
Key Perfect Forward Secrecy	Select whether to enable or disable PFS (Perfect Forward Secrecy).

Printing Lists/Reports

Click [Print List/Report] to display the page for printing reports. Then, select an item and click [Print] to print out information for that item.

Print List/Report

Item	Description
Configuration Page	Prints general information about the machine and its current configuration.
Test Page	Prints a test page for checking the printing condition.
PCL Font List	Prints the current configuration and installed PCL font list.
PS Font List	Prints the current configuration and installed PostScript font list.
Maintenance Page	Prints the maintenance page.

Note

- Reports cannot be printed via Web Image Monitor if other jobs are printing. Before printing reports, confirm that machine is not printing.
- Reports will be printed on A4 or Letter size paper. Load one of these sizes of paper into the tray before printing reports.

Configuring the Administrator Settings

Click [Administrator Tools] to display the page for configuring the administrator settings.

This page contains the following tabs: [Administrator], [Reset Settings], [Backup Setting], [Restore Setting], [Help Source File Setting], [Energy Saver Mode], and [PCL6 Mode].

Administrator Tab

Administrator Settings

Item	Description
New Password	Enter the new administrator password. Can contain up to 16 characters.
Confirm New Password	Enter the same password again, to confirm.

Reset Settings Tab

Reset Settings

Item	Description
Reset Network Settings	Select to restore settings configured under the [Network Settings] and [Administrator Tools].
Reset Menu Settings	Select to restore settings that are not related to the network to their defaults.
Reset IPsec Settings	Select to clear the IPsec settings.

Note

- [Reset IPsec Settings] appears only when the administrator password is specified.

Backup Setting Tab

Important

- When sending the machine for repair, it is important that you create backup files in advance. The machine's settings are returned to the default after repair.

Backup Setting

Item	Description
Back up Network Settings	Backs up settings configured under the [Network Settings] and [Administrator Tools].
Back up Menu Settings	Backs up settings that are not related to the network.
Back up IPsec Settings	Backs up the IPsec settings to a file.

Follow the procedure below to create configuration backup files.

1. **Select the radio button for the type of data you wish to back up.**
2. **Enter the administrator password if required.**
3. **Click [OK].**
4. **Click [Save] in the confirmation dialog box.**

Note

- [Back up IPsec Settings] appears only when the administrator password is specified.

Restore Setting Tab

Important

- **When the machine is returned from repair, it is important that you restore the machine's settings from the backup files. The machine's settings are returned to the default after repair.**

Restore Setting

Item	Description
File to Restore	Enter the path and name of the file to restore, or click [Browse...] to select the file.

Follow the procedure below to restore configuration backup files.

1. **Click [Browse...].**
2. **Navigate to the directory containing the backup file to restore.**
3. **Select the backup file, and click [Open].**
4. **Enter the administrator password if required.**
5. **Click [OK].**

Note

- If the settings are not restored successfully, an error message appears. Try again to restore the file completely.

Help Source File Setting Tab

Help Source File Setting

Item	Description
Help Source File	Enter the help source file path.

Energy Saver Mode Tab

Energy Saver Mode

Item	Description
Energy Saver Mode 1	Select [Active] to set the machine to enter Energy Saver mode 1 if the machine has been idle for about 30 seconds. It takes less time to recover from Energy Saver mode 1 than from power-off state or Energy Saver mode 2, but power consumption is higher in Energy Saver mode 1 than in Energy Saver mode 2.
Energy Saver Mode 2	• Europe Select [30sec] or specify the period of time (1-20min) for the machine to enter Energy Saver mode 2. • Countries other than European countries Select [30sec] or specify the period of time (1-240min) for the machine to enter Energy Saver mode 2. The machine consumes less power in Energy Saver mode 2 than in Energy Saver mode 1, but it takes longer to recover from Energy Saver mode 2 than from Energy Saver mode 1.

Note

- The printer recovers from Energy Saver mode when it receives a print job or when the [Power] key is pressed for less than 3 seconds.

PCL6 Mode

PCL6 Mode

Item	Description
PCL6 Mode	Set this to [Universal] when using the Universal Driver and to [SP 330/2300/3700/3710] when using the normal driver.

Using Smart Organizing Monitor

The state and status information of the machine can be checked using Smart Organizing Monitor.

Displaying the Smart Organizing Monitor Dialog

1. **On the [Start] menu, click [SP 330_3710_Series_Software Utilities].**
2. **Click [Smart Organizing Monitor for SP 330 3710 Series].**
3. **If the machine you are using is not selected, click [Connect Printer], and then do one of the following:**
   - Select the machine's model.
   - Enter the IP address of the machine manually.
   - Click [Search Network Printer] to search the machine via the network.
4. **Click [OK].**

Checking the Status Information

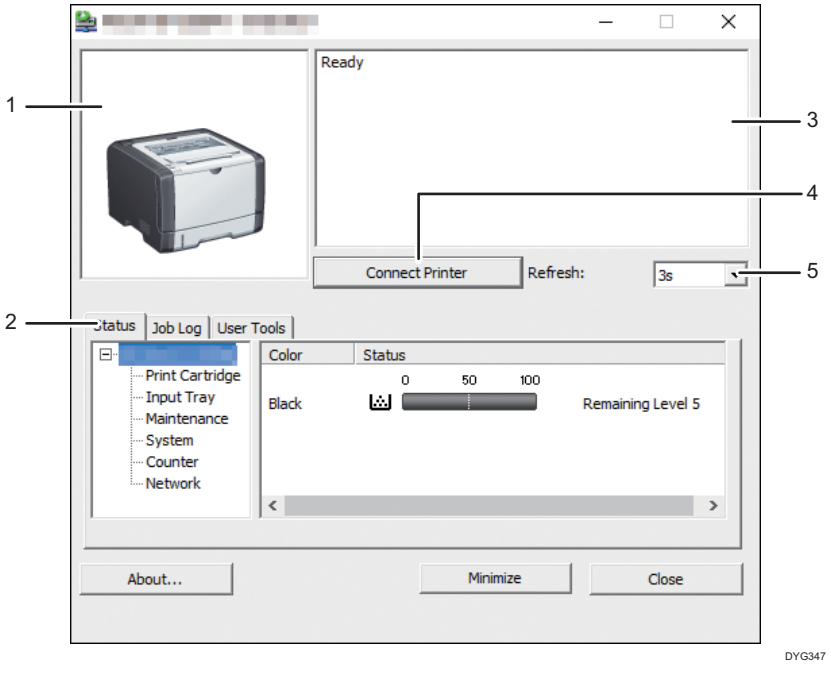

1. **Image area**

   Displays the status of this machine with an icon.

2. **Tab area**
   - Status tab
     - Printer Name
     - Print Cartridge

       Displays the following messages to indicate remaining toner levels: Remaining Level 2 to 5, "Almost Empty" and "Empty".
     - Input Tray

       You can check the following information about the input trays.

       [Input Tray], [Status], [Paper Size], [Paper Type]

       Displays the type of the paper loaded into each input tray.
     - Maintenance

       Displays the consumables statuses.
     - System

       Displays the system information about the printer, such as the model name, system version, and memory size.
     - Counter

       Displays information about the counters.
     - Network

       Displays network details such as the printer's IP address and network-related information.
   - Job Log tab

     Displays the job log information.
   - User Tools tab

     Click to print lists or configuration pages, or to configure settings of the machine.
3. **Message area**

   Displays the status of this machine with a message.

   For details about error messages, see page 143 "Error and Status Messages Appear on Smart Organizing Monitor".
4. **[Connect Printer] button**

   Click to select a printer driver.
5. **[Refresh:]**

   Specify the automatic update of the display.

Configuring the Machine Settings

Smart Organizing Monitor is used to modify the machine's settings.

1. **On the [Start] menu, click [SP 330_3710_Series_Software Utilities].**
2. **Click [Smart Organizing Monitor for SP 330 3710 Series].**

3. **If the machine you are using is not selected, click [Connect Printer], and then do one of the following:**
   - Select the machine's model.
   - Enter the IP address of the machine manually.
   - Click [Search Network Printer] to search the machine via the network.
4. **Click [OK].**
5. **On the [User Tools] tab, click [Printer Configuration].**
6. **Enter the access code, and then click [OK].**

   The default access code is "Admin".
7. **Change the settings if necessary.**
8. **Click [OK].**
9. **Click [Close].**

Access Code

The configurable functions depend on the authority of the access code you enter.

- Administrator

  All tabs in the [Printer Configuration] dialog box are available.
- General users

  Only the [Paper Input] tab is available.

Tab Settings

This section provides a tab-by-tab overview of the machine settings that can be modified using Smart Organizing Monitor. For more information on each setting item, see the Smart Organizing Monitor Help.

Paper Input tab

- You can change paper size and other paper settings.

Maintenance tab

- You can adjust print starting positions.

System tab

- You can set basic functions required to use the printer. The printer can be used on factory-set defaults, but the configuration can be changed depending on the condition of the user.
- The changed condition holds even if the printer is turned off.
- The access code can be changed on this tab.

IPv6, Network 1, Network 2 and Network 3 tabs

- You can set configurations about network connection and communication.

- The following operations are possible on these tabs:
  - Checking the printer name, active protocol, and other printer information
  - Making interface settings, including the timeout setting and protocol settings
  - Checking or making TCP/IP settings
  - Checking or making SMTP, SNMP and IPsec settings
  - Checking or making Alert settings

Wireless tab

- You can set configurations about wireless LAN network connection and communication.
- The following operations are possible on the tab:
  - Checking the wireless LAN status
  - Connecting wireless LAN manually

Printer tab

- You can set configurations about the printer.

Printing the Configuration Page

1. **On the [Start] menu, click [SP 330_3710_Series_Software Utilities].**
2. **Click [Smart Organizing Monitor for SP 330 3710 Series].**
3. **If the machine you are using is not selected, click [Connect Printer], and then do one of the following:**
   - Select the machine's model.
   - Enter the IP address of the machine manually.
   - Click [Search Network Printer] to search the machine via the network.
4. **Click [OK].**
5. **On the [User Tools] tab, select [Configuration Page] in the [List/Test Print] list.**
6. **Click [Print].**

6. Maintaining the Machine

This chapter describes how to replace supplies and how to clean the machine.

Replacing the Print Cartridge

Important

- Store print cartridge in a cool dark place.
- Actual printable numbers vary depending on image volume and density, number of pages printed at a time, paper type and size, and environmental conditions such as temperature and humidity. Toner quality degrades over time. Early replacement of the print cartridge might be necessary. Therefore, we recommend you always keep a new print cartridge ready.
- For good print quality, the manufacturer recommends that you use genuine toner from the manufacturer.
- The manufacturer shall not be responsible for any damage or expense that might result from the use of parts other than genuine parts from the manufacturer with your office products.
- If you try to print while the message "Replacement Required: Print Cartridge" is being displayed, another message "Continue printing?" may appear. If this happens, you can print a few pages by pressing the [OK] key, although the print quality may be lower. Replace the toner as soon as possible. If the message "Continue printing?" does not appear, replace the toner immediately.
- Do not allow paper clips, staples, or other small objects to fall inside the machine.
- Do not expose the print cartridge without its cover to direct sunlight for a long time.
- Do not touch the print cartridge's photo conductor unit.

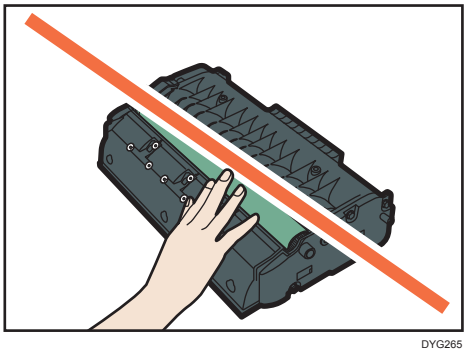

DYG265

- Do not touch the ID chip on the side of the print cartridge as indicated in the illustration below.

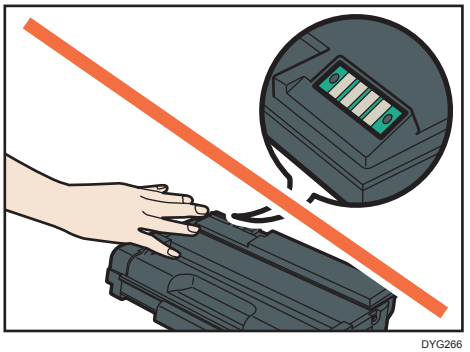

DYG266

Messages on the screen

- Replace the print cartridge when "Replacement Required: Print Cartridge" appears on the screen.
- Prepare a new print cartridge when "Replace Required Soon: Print Cartridge" appears on the screen.

1. **If paper is loaded in the bypass tray, remove the paper and close the bypass tray.**
2. **Push the side button to open the front cover, and then carefully lower it.**

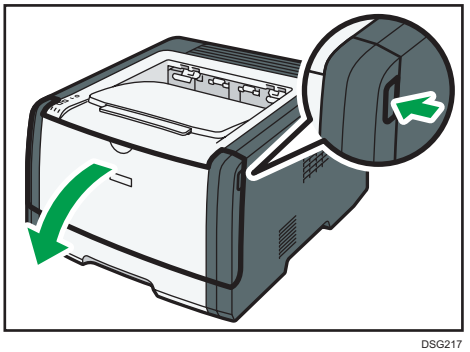

DSG217

3. **Hold the center of the print cartridge and carefully raise it slightly and then pull it out horizontally.**

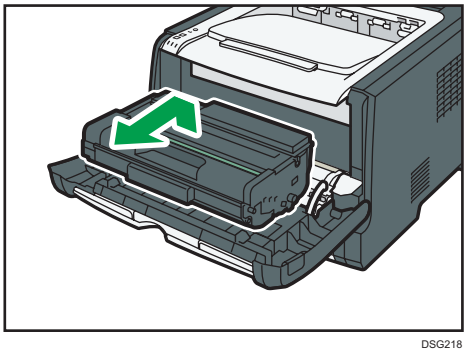

DSG218

- Do not shake the removed print cartridge. Doing so can cause remaining toner to leak.

- Place the old print cartridge on paper or similar material to avoid dirtying your workspace.

4. **Take the new print cartridge out of the box, and then take it out of the plastic bag.**

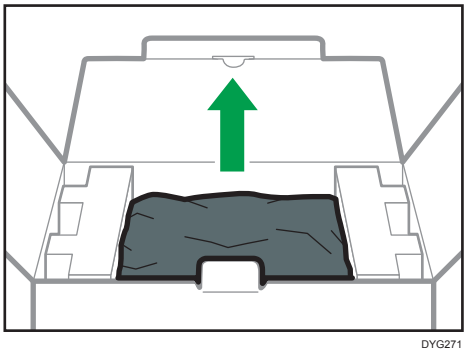

DYG271

5. **Place the print cartridge on a flat surface, and then remove the protection sheet.**

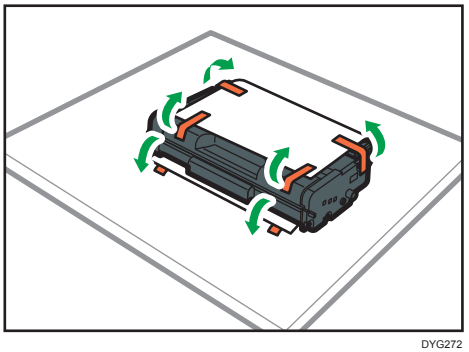

DYG272

6. **Hold the print cartridge and shake it from side to side five or six times.**

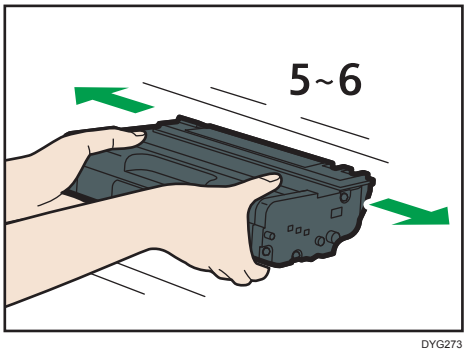

DYG273

Even distribution of toner within the bottle improves print quality.

7. **Slide the print cartridge in horizontally. When the cartridge can go no further, raise it slightly and push it fully in. Then push down on the cartridge until it clicks into place.**

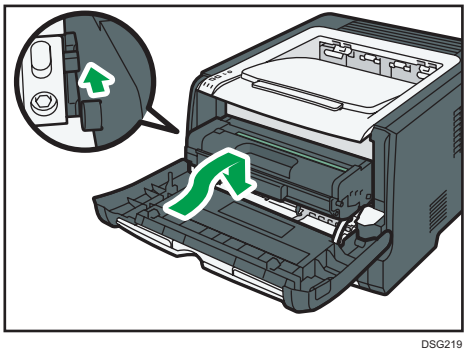

DSG219

8. **Carefully push up the front cover until it closes. Be careful not to trap your fingers.**

   After closing the front cover, wait until the print cartridge is ready to use.

9. **Put the protective sheet you removed in Step 5 on the old print cartridge. Then, put the old print cartridge into the bag, and then put it into the box.**

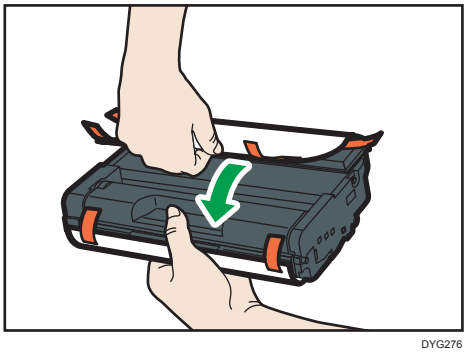

DYG276

Note

- Make sure to cover the old print cartridge with the protective cover for recycling and environmental purposes.
- Region A (mainly Europe and Asia)
  If you want to discard your used toner container, please contact your local sales office. If you discard it by yourself, treat it as general plastic waste material.
- Region B (mainly North America)
  Please see our local company website for information on the recycling of supply products, or you can recycle items according to the requirements of your local municipalities or private recyclers.

Cautions When Cleaning

Clean the machine periodically to maintain high print quality.

Dry wipe the exterior with a soft cloth. If dry wiping is not sufficient, wipe with a soft, damp cloth that has been wrung out thoroughly. If you still cannot remove the stain or grime, use a neutral detergent, wipe over the area with a thoroughly-wrung damp cloth, and then dry wipe the area and allow it to dry.

Important

- To avoid deformation, discoloration, or cracking, do not use volatile chemicals, such as benzine and thinner, or spray insecticide on the machine.
- If there is dust or grime inside the machine, wipe with a clean, dry cloth.
- You must disconnect the plug from the wall outlet at least once a year. Clean away any dust and grime from the plug and outlet before reconnecting. Accumulated dust and grime pose a fire hazard.
- Do not allow paper clips, staples, or other small objects to fall inside the machine.

Cleaning the Friction Pad and Paper Feed Roller

If the friction pad or paper feed roller is dirty, a multi-feed or misfeed might occur. In this case, clean the friction pad and paper feed roller as follows:

Important

- Do not use chemical cleaning fluids or organic solvents such as thinner or benzine.

1. **Turn off the power.**
2. **Unplug the power cord from the wall outlet. Remove all the cables from the machine.**
3. **Pull out Tray 1 carefully with both hands.**

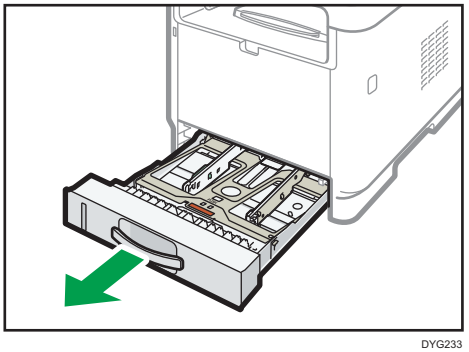

DYG233

Place the tray on a flat surface. If there is paper in the tray, remove it.

4. **Wipe the friction pads with a damp cloth.**

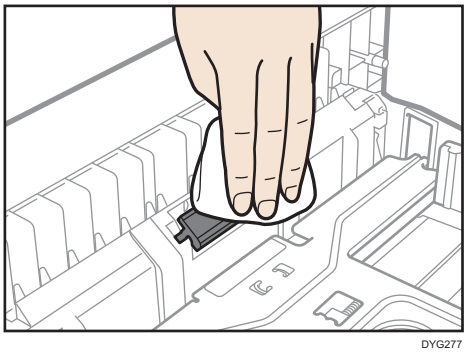

DYG277

5. Wipe the rubber part of the roller with a soft damp cloth. After that, wipe it with a dry cloth to remove the moisture.

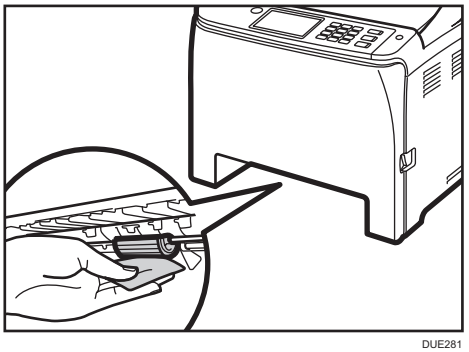

DUE281

6. Push the metal plate down until it clicks.

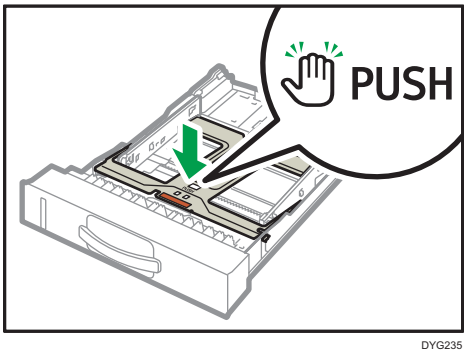

DYG235

7. Reload the removed paper into the tray, and then push the tray carefully into the machine until it clicks into place.

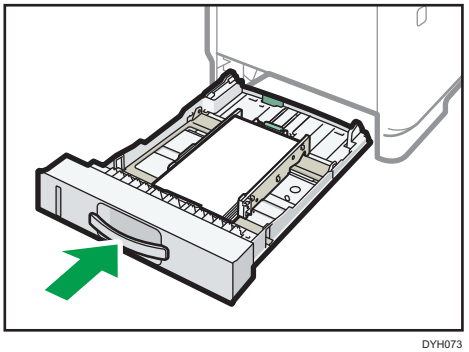

DYH073

8. Insert the plug of the power cord into the wall socket securely. Connect all the interface cables that were removed.
9. Turn on the power.

Note

- If jams or multi-sheet feeds occur after cleaning the friction pad, contact your sales or service representative.
- If Tray 2 is installed, clean its friction pad and paper feed roller in the same way as you did for Tray 1.

Moving and Transporting the Machine

This section provides cautions that you must follow when moving the machine both short and long distances.

Repack the machine in its original packing materials when moving it over a long distance.

Important

- **Be sure to disconnect all cables from the machine before transporting it.**
- **The machine is a precision piece of machinery. Be sure to handle it carefully when moving it.**
- **Make sure to move the machine horizontally. Take extra caution when carrying the machine up or down stairs.**
- **If Tray 2 is installed, remove it from the machine, and move them separately.**
- **Do not remove the print cartridge when moving the machine.**
- **Be sure to hold the machine level while carrying it. To prevent toner from spilling, move the machine carefully.**
- Keep the machine away from salt-bearing air and corrosive gases. Also, do not install the machine in places where chemical reactions are likely (laboratories, etc.), as doing so will cause the machine to malfunction.

Ventilation

When you use this machine in a confined space without good ventilation for a long time or print large quantities, you might detect an odd smell.

This might cause the output paper to also have an odd smell.

When you detect an odd smell, regularly ventilate in order to keep the workplace comfortable.

- Set up the machine so that it does not directly ventilate towards people.
- Ventilation should be more than 30 m^3/hr/person.

New machine smell

When a machine is new, it might have a unique smell. This smell will subside in about one week.

When you detect an odd smell, sufficiently ventilate and circulate the air in the room.

1. **Be sure to check the following points:**
   - The power switch is turned off.
   - The power cord is unplugged from the wall outlet.
   - All other cables are unplugged from the machine.
2. **If Tray 2 is installed, remove it.**

3. **Lift the machine using the inset grips on both sides of the machine, and then move it horizontally to the place where you want to use it.**

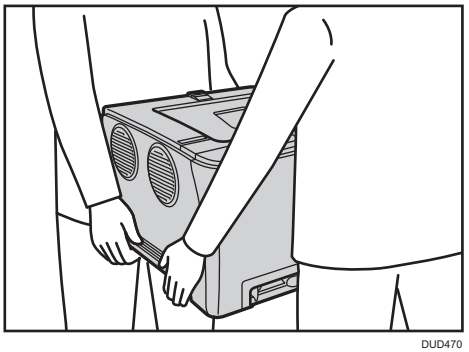

DUD470

4. **If you have removed Tray 2, reinstall it.**

Note

- To move the machine over a long distance, pack it well and empty all the paper trays. Take care not to tip or tilt the machine during transit.
- Toner might spill inside the machine if the machine is not kept level during transit.
- For more information about moving the machine, contact your sales or service representative.

Disposal

Ask your sales or service representative for information about correct disposal of this machine.

Where to Inquire

Contact your sales or service representative for further information about the topics included in this manual or to inquire about other topics not included in this manual.

7. Troubleshooting

This chapter provides solutions for error messages and other problems.

Error and Status Messages on the Control Panel

This section explains what the messages that appear on the control panel mean and what to do when a particular message appears.

Status messages

Message	Explanation	Recommended Action
Processing...	The machine is printing.	Wait a while.
Ready	This is the default ready message.	The machine is ready for use. No action is required.
Printing...	The machine is printing.	Wait a while.
Please wait	The machine is waiting for the next data to print.	Wait a while.
Warming up...	The printer is warming up or toner is being supplied.	Wait until "Ready" appears on the display.

Messages

Message	Explanation	Recommended Action
Check Paper Size #: Job:	The paper size setting in the tray # (1, 2, bypass) differs from that of actual paper size in the tray.	Load paper of the selected size in the tray, and then select [FormFeed] to continue printing. Select [Job Reset] to cancel printing.
Check Paper Type #: Job:	The paper type setting in the tray # (1, 2, bypass) differs from that of actual paper type in the tray.	Load paper of the selected type in the tray, and then select [FormFeed] to continue printing. Select [Job Reset] to cancel printing.
Cover Open	The top or front cover is open.	Open and then close the top or front cover.

Message	Explanation	Recommended Action
Update Firmware Unknown Error	Controller FW could not be downloaded.	Turn off the main power, turn it back on, and then download the controller FW again. If the download fails again, contact your sales or service representative.
Indep.Sply.Prt.Cart.	A non-supported print cartridge is installed.	Replace the toner to an appropriate one. See page 129 "Replacing the Print Cartridge". If the error message appears even though the toner cartridge is attached correctly, use a dry cloth to wipe the part of the toner cartridge that is in contact with the machine.
Out of Paper: #	The indicated tray # (1, 2, bypass) is out of paper.	Load paper into the indicated paper tray. See page 28 "Loading Paper".
Memory Overflow	This error occurs when FW memory is not enough to save the printing page.	Reduce the size of the data, and then try the operation again.
Misfeed: Dup. Unit	There is a paper jam in the duplex unit.	Remove the misfed paper. See page 145 "Removing Printing Jams".
Internal Misfeed	There is a paper jam in the fusing unit.	
Misfeed: BypassTray	There is a paper jam in the bypass tray.	
Misfeed: Tray 1	There is a paper jam in Tray 1.	
Misfeed: Tray 2	There is a paper jam in Tray 2.	
Misfeed: Main Tray	There is a paper jam in the paper exit area.	

Message	Explanation	Recommended Action
Remove Paper: Bypass Tray	The machine failed to proceed with the print job, because Tray 1 or Tray 2 was specified as the input tray but paper was loaded in the bypass tray.	Remove paper from the bypass tray.
Replacement Required: Print Cartridge	The printer is out of toner.	Replace the print cartridge. See page 129 "Replacing the Print Cartridge".
Replace Required Soon: Print Cartridge	The printer is almost out of toner.	Prepare a new print cartridge.
Replacement Required: Fusing Unit	It is time to replace the Fusing unit.	Contact your sales or service representative.
Replacement Required: Transfer Roller	It is time to replace the transfer roller.	Contact your sales or service representative.
Print Cart. Set Error	The print cartridge is not installed correctly, or not installed.	Install the print cartridge correctly.
	The error message appears even though the print cartridge is installed correctly.	Using a dry cloth, carefully wipe the interface area on the print cartridge surface.
Fusing Unit Set Error	The fusing unit is not installed or not installed correctly.	Install the fusing unit correctly.
Service call SCXXX	There is a problem with the printer's controller.	Turn off the main power, and then turn it on again. If the error occurs again, contact your sales or service representative.

Panel Indicator

The following table explains the meaning of the various indicator patterns that the printer alerts to users about its conditions.

Indicator patterns	Cause
The Alert indicator is lit.	The printer cannot be used normally. Check the error on the control panel.
The Alert indicator is flashing in red.	Toner has nearly run out.
The Data In indicator is flashing.	The printer is receiving print data from a computer.
The Data In indicator is lit.	There is data to be printed.
The Power indicator is lit.	The power is on.

Error and Status Messages Appear on Smart Organizing Monitor

Message	Causes	Solutions
No Response from I/O Device Check the cable, power cord, and main switch.	• The power cable of the machine is not plugged in. • The power of the machine is not turned ON. • The USB cable is not connected.	• Check the printer power cord. • Check the printer power switch is on. • Check the USB cable is properly connected.
Tray Not Detected or No Paper The indicated paper source tray is not set properly, or no paper loaded. Check the indicated tray.	• Tray 1 has run out of paper. • The bypass tray has run out of paper.	• Load paper into Tray 1. See page 28 "Loading Paper". • Load paper into the bypass tray. See page 28 "Loading Paper".
Tray 1 Jam Bypass Tray Jam Duplex Jam Inner Jam Outer Jam Total Jam	A paper jam has occurred in the machine.	Remove the jammed paper. See page 145 "Removing Paper Jams" and page 156 "Paper Feed Problems".
Paper Size Mismatch Paper of the selected paper size is not loaded in the indicated paper source tray. Check the indicated tray.	The paper size specified on the machine and the size specified in the printer driver do not match.	For details about specifying the paper size setting on the machine, see page 27 "Paper Specifications and Adding Paper". For details about changing the paper size setting in the printer driver, see the printer driver Help.

Message	Causes	Solutions
Paper Type Mismatch Paper of the selected paper type is not loaded in the indicated paper source tray. Check the indicated tray.	The paper type specified on the machine and the type specified in the printer driver do not match.	For details about changing the paper type setting of the machine, see page 27 "Paper Specifications and Adding Paper". For details about changing the paper type setting in the printer driver, see the printer driver Help.
Print Cartridge is near empty.	The print cartridge is almost empty.	Prepare a new print cartridge.
Shortly printing becomes not available. Please keep Print Cartridge handy.	The machine has run out of the toner.	Replace the print cartridge. See page 129 "Replacing the Print Cartridge".
Printing has been interrupted because of the memory overflow.	The data is too large or complex to print.	Select [600 x 600 dpi] in [Resolution] to reduce the size of data. For details, see the printer driver Help.
No Toner or Waste Toner full No printing is available. Open the indicated cover, and then replace Print Cartridge.	The print cartridge has not been installed.	Replace the print cartridge. See page 129 "Replacing the Print Cartridge".

Removing Paper Jams

If a paper jam occurs, one of the following messages appears on the control panel:

Message	Reference title
Internal Misfeed	See page 145 "Removing jammed paper from Tray 1".
Misfeed: Tray 1	
Misfeed: Tray 2	
Misfeed: BypassTray	See page 147 "Removing jammed paper from the bypass tray".
Misfeed: Dup. Unit Remove Paper	See page 149 "Removing jammed paper from the standard tray or duplex unit".
Misfeed: Main Tray	

See the section identified by the message and remove the jammed paper accordingly.

Removing Printing Jams

Important

- Jammed paper may be covered in toner. Be careful not to get toner on your hands or clothes.
- Toner on prints made immediately after clearing a paper jam may be insufficiently fused and may smudge. Make test prints until smudges no longer appear.
- Do not forcefully remove jammed paper, as it may tear. Torn pieces remaining inside the machine will cause further jams and possibly damage the machine.
- Paper jam can cause pages to be lost. Check your print job for missing pages and reprint any pages that did not print out.

Removing jammed paper from Tray 1

If "Internal Misfeed", "Misfeed: Tray 1", or "Misfeed: Tray 2" appears on the display, follow the procedure below to remove it.

The following example explains the removing procedure for the standard paper tray (Tray 1).

The same procedure applies to remove jammed paper from Tray 2.

1. **Pull tray 1 halfway out, and check for jammed paper. If there is jammed paper, remove it carefully.**

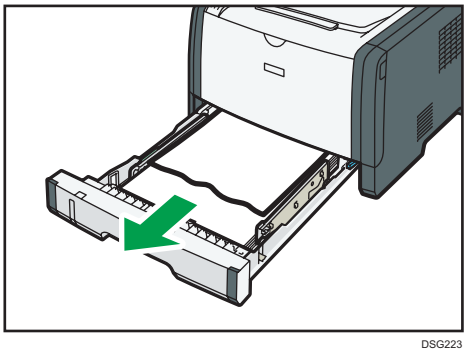

DSG223

2. **Carefully slide tray 1 back in until it stops.**
3. **If paper is loaded in the bypass tray, remove the paper.**
4. **Close the bypass tray.**
5. **Push the side button to open the front cover, and then carefully lower it.**

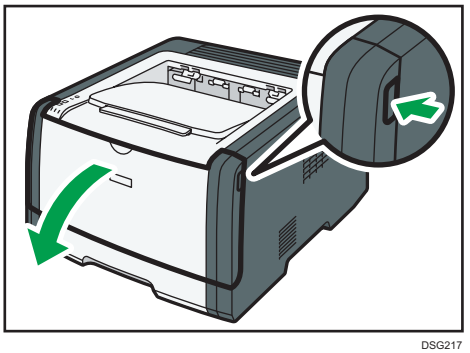

DSG217

6. **Hold the center of the print cartridge and carefully raise it slightly and then pull it out horizontally.**

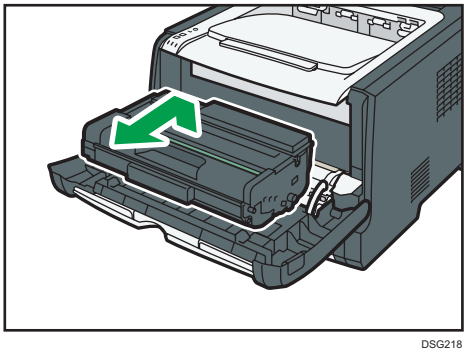

DSG218

- Do not shake the removed print cartridge. Doing so can cause remaining toner to leak.
- Place the print cartridge on paper or similar material to avoid dirtying your workspace.

7. **Lifting the guide plate, remove the jammed paper carefully.**

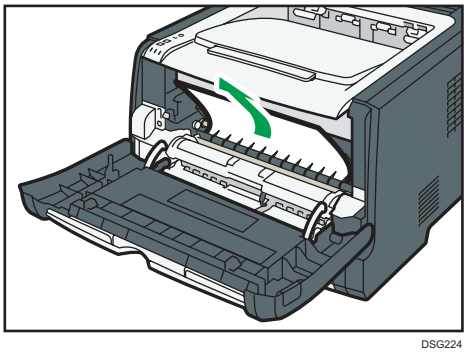

DSG224

8. **Slide the print cartridge in horizontally. When the cartridge can go no further, raise it slightly and push it fully in. Then push down on the cartridge until it clicks into place.**

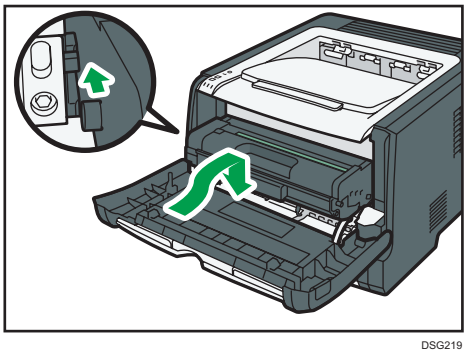

DSG219

9. **Using both hands, carefully push up the front cover until it closes.**

Note

- When closing the front cover, push the upper area of the cover firmly. After closing the cover, check that the error is cleared.

Removing jammed paper from the bypass tray

If "Misfeed: BypassTray" appears on the display, follow the procedure below to remove it.

1. **If paper is jammed in the bypass tray input area, remove the jammed paper carefully.**

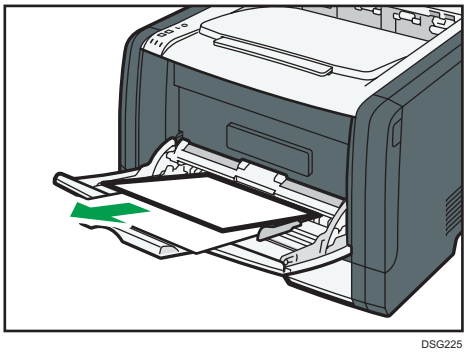

DSG225

2. **Close the bypass tray.**
3. **Push the side button to open the front cover, and then carefully lower it.**

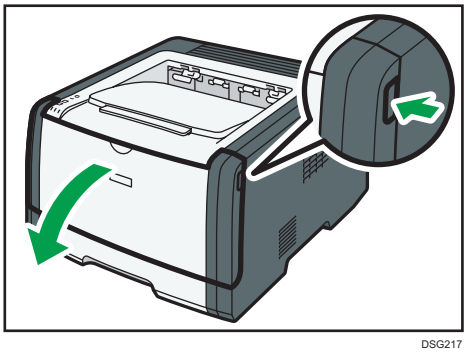

DSG217

4. **Hold the center of the print cartridge and carefully raise it slightly and then pull it out horizontally.**

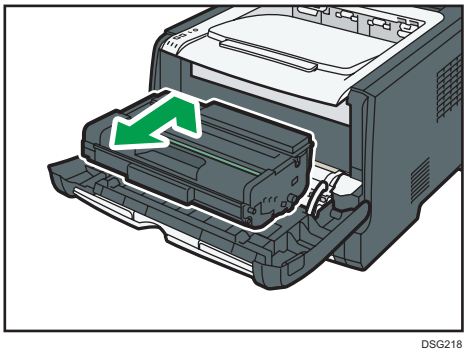

DSG218

- Do not shake the removed print cartridge. Doing so can cause remaining toner to leak.
- Place the print cartridge on paper or similar material to avoid dirtying your workspace.

5. **Lifting the guide plate, remove the jammed paper carefully.**

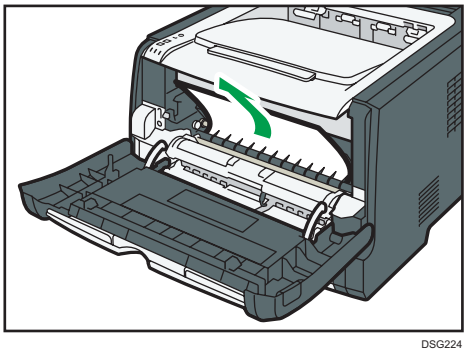

DSG224

6. **Slide the print cartridge in horizontally. When the cartridge can go no further, raise it slightly and push it fully in. Then push down on the cartridge until it clicks into place.**

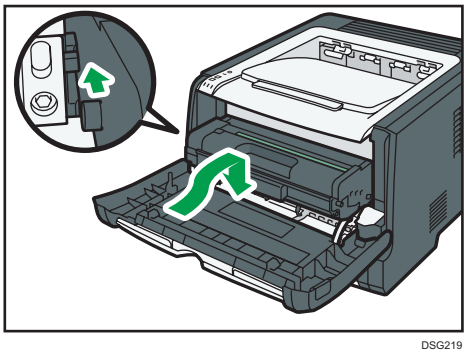

DSG219

7. **Using both hands, carefully push up the front cover until it closes.**

Note

- When closing the front cover, push the upper area of the cover firmly. After closing the cover, check that the error is cleared.

Removing jammed paper from the standard tray or duplex unit

If "Misfeed: Main Tray" or "Misfeed: Dup. Unit Remove Paper" appears on the display, follow the procedure below to remove it.

1. **Open the rear cover.**

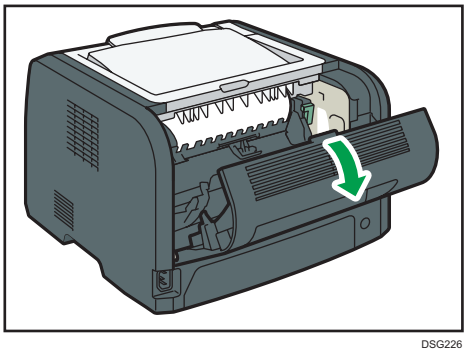

DSG226

2. **Hold down the B lever.**

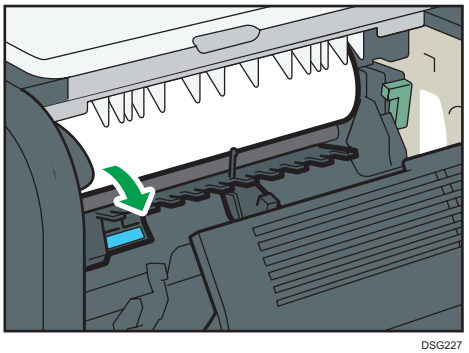

DSG227

3. **Remove the jammed paper carefully.**

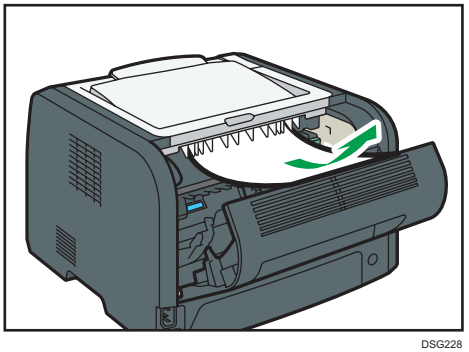

DSG228

4. **Close the rear cover.**

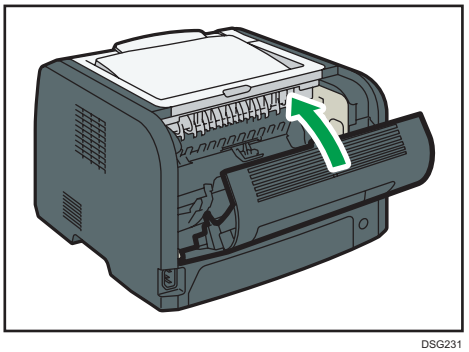

DSG231

5. **Pull tray 1 halfway out, and check for jammed paper. If there is jammed paper, remove it carefully.**

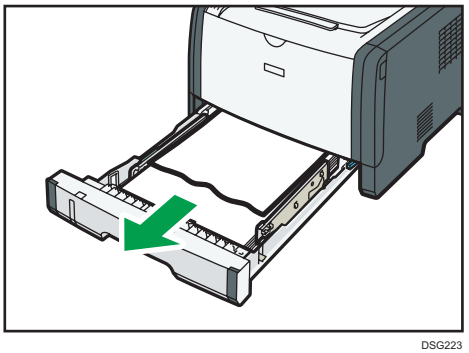

DSG223

6. **Pull tray 1 out completely with both hands.**

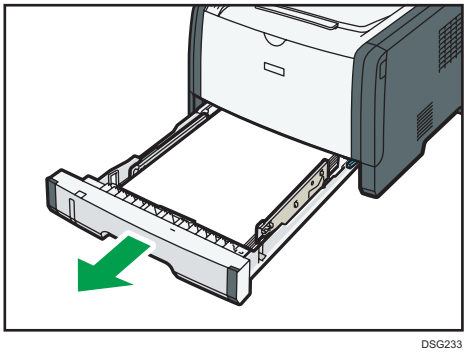

DSG233

Place the tray on a flat surface.

7. **Push the lever.**

Pushing the lever lowers the duplex transport unit.

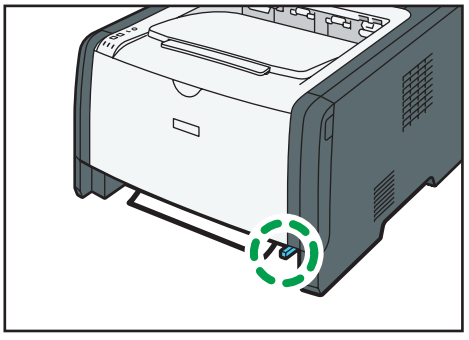

DSG234

8. If there is jammed paper, carefully remove it.

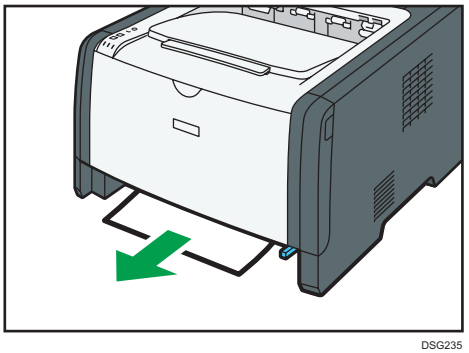

DSG235

9. With the duplex transport unit still lowered, carefully slide tray 1 back in until it stops.

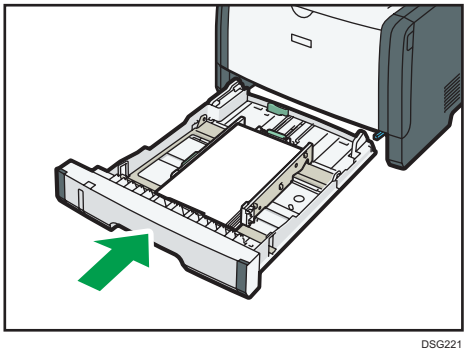

DSG221

10. If paper is loaded in the bypass tray, remove the paper and close the bypass tray.

11. **Push the side button to open the front cover, and then carefully lower it.**

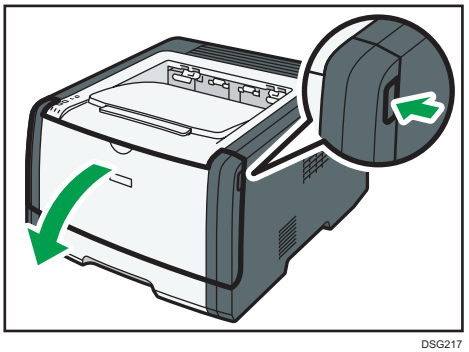

DSG217

12. **Hold the center of the print cartridge and carefully raise it slightly and then pull it out horizontally.**

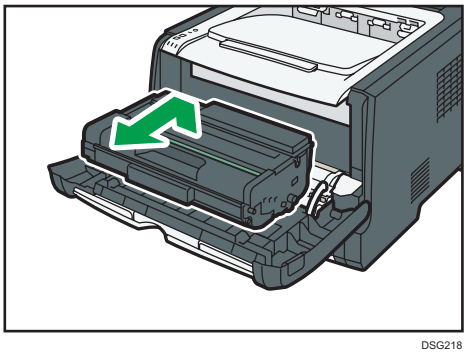

DSG218

- Do not shake the removed print cartridge. Doing so can cause remaining toner to leak.
- Place the print cartridge on paper or similar material to avoid dirtying your workspace.

13. **Lifting the guide plate, remove the jammed paper carefully.**

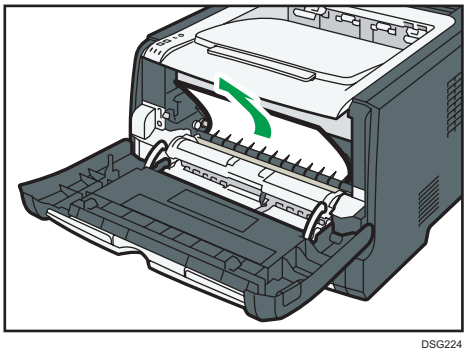

DSG224

14. **Slide the print cartridge in horizontally. When the cartridge can go no further, raise it slightly and push it fully in. Then push down on the cartridge until it clicks into place.**

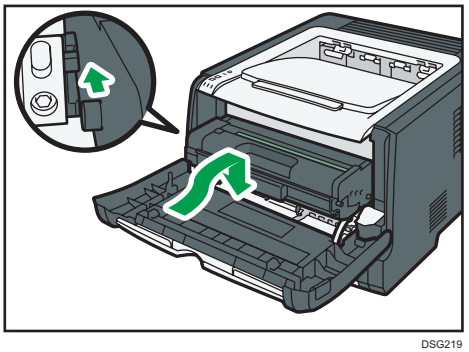

DSG219

15. **Using both hands, carefully push up the front cover until it closes.**

Note

- When closing the covers, push the covers firmly. After closing the covers, check that the error is cleared.

When You Cannot Print Test Page

Possible cause	Solution
The power cord, a USB cable, or a network cable is not connected correctly.	Make sure that the power cord, USB cable, and network cable are connected correctly. Also confirm that they are not damaged.
The port connection is not established correctly.	1. On the [Start] menu, click [Settings]. 2. Click [Devices]. 3. Click [Printers & scanners], and then click [Devices and printers] in Related Settings. 4. Right-click the icon of the printer you want to use. 5. Click [Printing preferences]. 6. Click the [Ports] tab, and then make sure that the port is set as a USB or network printer.

Paper Feed Problems

If the machine is operating but paper will not feed or paper jams occur frequently, check the condition of the machine and paper.

Problem	Solution
Paper does not feed smoothly.	• Use supported types of paper. See page 45 "Supported Paper". • Load paper correctly, making sure that the side or end fences of the paper tray, or the paper guides of the bypass tray are properly adjusted. See page 28 "Loading Paper". • If the paper is curled, straighten the paper. • Take out the paper from tray and fan it well. Then, reverse the top and bottom of the paper, and put it back in the tray.
Paper jams occur frequently.	• If there are gaps between the paper and the side or end fences of the paper tray, or the paper guides of the bypass tray, adjust the side or end fences of the paper tray, or the paper guides of the bypass tray to remove the gaps. • Avoid printing on both sides of paper when printing images that contain large solid areas, which consume a lot of toner. • Use supported types of paper. See page 45 "Supported Paper". • Load paper only as high as the upper limit markings on the side fence. • Make sure that the friction pads and paper feed rollers are clean. See page 134 "Cleaning the Friction Pad and Paper Feed Roller".

Problem	Solution
Multiple sheets of paper are fed at one time.	• Fan the paper well before loading. Also make sure that the edges are even by tapping the stack on a flat surface such as a desk. • Make sure that the side or end fences are in the right position. • Use supported types of paper. See page 45 "Supported Paper". • Load paper only as high as the upper limit markings on the side fence. • Make sure that the friction pads and paper feed rollers are clean. • Check that paper was not added while there was still some left in the tray. Only add paper when there is none left in the tray.
Paper gets wrinkles.	• Paper is damp. Use paper that has been stored properly. See page 45 "Supported Paper". • Paper is too thin. See page 45 "Supported Paper". • If there are gaps between the paper and the side or end fences of the paper tray, or the paper guides of the bypass tray, adjust the side or end fences of the paper tray, or the paper guides of the bypass tray to remove the gaps.
The printed paper is curled.	• Load the paper upside down in the paper tray. • If the paper curl is severe, take prints from the output tray more frequently. • Paper is damp. Use paper that has been stored properly. See page 45 "Supported Paper".

Problem	Solution
Images are not printed in the right position 	Adjust the front end fence and both side fences to match the paper size. See page 28 "Loading Paper".
Images are printed diagonally to the pages. 	If there are gaps between the paper and the side or end fences of the paper tray, or the paper guides of the bypass tray, adjust the side or end fences of the paper tray, or the paper guides of the bypass tray to remove the gaps.

Print Quality Problems

Checking the Condition of the Machine

If there is a problem with the quality of printing, first check the condition of the machine.

Possible Cause	Solution
There is a problem with the machine's location.	Make sure that the machine is on a level surface. Place the machine where it will not be subject to vibration or shock.
Unsupported types of paper is used.	Make sure that the paper being used is supported by the machine. See page 45 "Supported Paper".
The paper type setting is incorrect.	Make sure that the paper type setting of the printer driver matches the type of paper loaded. See page 43 "Specifying Paper Type and Paper Size Using the Printer Driver".
A non-genuine print cartridge is being used.	Refilled or non-genuine print cartridge reduces print quality and can cause malfunctions. Use genuine print cartridge only.
An old print cartridge is being used.	Print cartridge should be opened before their expiration date and used within six months of being opened.
The machine is dirty.	See page 129 "Maintaining the Machine", and clean the machine as required.
Humidity level surrounding the machine may be too low.	Using the machine in a room where humidity level is too low may cause black lines of a few millimeters thick to appear on printouts with 75-millimeter spaces in between. In this case, set [Low Humidity Mode] to [On]. For details about how to configure the settings, see page 81 "System Settings Menu".

Checking the Printer Driver Settings

Problem	Solution
The printed image is smudged.	**PCL 5e/6** On the printer driver's [Paper] tab, select [Bypass Tray] in the "Input Tray:" list. In the "Paper Type:" list, select a proper paper type. **PostScript 3** On the printer driver's [Paper/Quality] tab, select [Bypass Tray] in the "Paper Source" list. In the "Media" list, select a proper paper type.
Images smudge when rubbed. (Toner is not fixed.)	**PCL 5e/6** On the printer driver's [Paper] tab, select a proper paper type in the "Paper Type:" list. **PostScript 3** On the printer driver's [Paper/Quality] tab, select a proper paper type in the "Media" list.
The printed image is different from the image on the computer's display.	**Only when using PCL 5e/6** On the printer driver's [Print Quality] tab, select [Raster] in the "Graphics Mode" list.
When printing graphics, the output and the screen are different.	To print accurately, specify the printer driver setting to print without using the graphics command. For details about specifying the printer driver setting, see the printer driver Help.
Images are cut off, or excess is printed.	Use the same size paper selected in the application. If you cannot load paper of the correct size, use the reduction function to reduce the image, and then print. For details about the reduction function, see the printer driver Help.
Photo images are coarse.	Use the application's or printer driver's settings to specify a higher resolution. For details about the printer driver's settings, see the printer driver Help.
A solid line is printed as a dashed line or appears blurred.	Change the dithering settings on the printer driver. For details about the dithering settings, see the printer driver Help.

Problem	Solution
Fine lines are fuzzy, of inconsistent thickness, or do not appear.	Change the dithering settings on the printer driver. For details about the dithering settings, see the printer driver Help. If the problem persists, specify the settings of the application in which the image was created to change the thickness of the lines.

Printer Problems

This section describes printing problems and possible solutions.

When You Cannot Print Properly

Problem	Solution
An error occurs.	If an error occurs when printing, change the computer or printer driver settings. • Check the printer icon name does not exceed 32 alphanumeric characters. If it does, shorten it. • Check whether other applications are operating. Close any other applications, as they may be interfering with printing. If the problem is not resolved, close unneeded processes too. • Check that the latest printer driver is being used.
A Locked Print file is canceled.	• The machine already has 5 jobs or 5 MB of Locked Print data. Print or delete an existing Locked Print file. For details, see page 66 "Printing Confidential Documents". • Even if the machine cannot store any more Locked Print files, the machine holds the new Locked Print file for the period of time specified in [Timeout:LockPrt] under [Host Interface] before canceling that file. Within this time, you can print or delete the new Locked Print file. You can also print or delete an existing Locked Print file so that the new Locked Print file can be stored in the machine. • For details about [Timeout:LockPrt], see page 81 "System Settings Menu".
A Locked Print file is canceled.	**Only when using PCL 5e/6** The Locked Print file has too many pages or it is too large.Reduce the number of pages to print, or print with a lower setting for [Gradation:] in [Print Quality]. For details, see the printer driver Help.

Problem	Solution
There is a considerable delay between the print start command and actual printing.	• Processing time depends on data volume. High volume data, such as graphics-heavy documents, take longer to be processed. • To speed up printing, reduce the printing resolution using the printer driver. For details, see the printer driver Help. • The machine is calibrating color. Wait for a while.
Documents are not printed properly when using a certain application, or image data is not printed properly. Some characters are printed faintly or not printed.	Change the print quality settings.
It takes too long to complete the print job.	• Photographs and other data intensive pages take a long time to be processed so simply wait when printing such data. • Changing the settings with printer driver may help to speed up printing. See the printer driver Help. • The data is so large or complex that it takes a long time to be processed. • If the Data In indicator is flashing, the data is being processed. • Just wait until it printing is resumed. • If the Data In indicator on the control panel is flashing, the printer is warming up. Wait for a while. • The printer is adjusting the color registration. Wait for a while.
A printed image is different from the image on the computer's display.	• When you use some functions, such as enlargement and reduction, the layout of the image might be different from that displayed in the computer display. • Check that the page layout settings are properly configured in the application. • Make sure the paper size selected in the printer properties dialog box matches the size of the paper loaded. For details, see the printer driver Help.

Problem	Solution
Images are cut off, or excess pages are printed.	If you are using paper whose size is smaller than the paper size selected in the application, use the same size paper selected in the application. If you cannot load paper of the correct size, use the reduction function to reduce the image, and then print. See the printer driver Help.

When You Cannot Print Clearly

Problem	Solution
The whole printout is blurred.	• The paper being used may be damp. Use paper that has been stored properly. See page 45 "Supported Paper". • If you enable [Toner Saving] under [System Settings], printing is generally less dense. • The print cartridge is almost empty. If "Replacement Required: Print Cartridge" appears on the screen, replace the indicated print cartridge. • Condensation may have occurred. If rapid change in temperature or humidity occurs, use this machine only after it has acclimatized.
Toner smears appear on the print side of the page.	• The paper setting may not be correct. For example, although you are using thick paper, the setting for thick paper may not be specified. Check the printer driver's paper settings. See the printer driver Help. • Check that the paper is not curled or bent. Envelopes can be curled easily. Flatten out the paper before loading it. See page 28 "Loading Paper".

Problem	Solution
Horizontal lines appear on the printed paper.	• Impact can cause lines to appear on printed paper and other malfunctions. Protect the printer from impact at all times, especially while it is printing. • If lines appear on prints, turn the printer off, wait a few moments, and then turn it back on again. Then, perform the print job again.
Photo images are coarse.	Some applications lower the resolution for making prints.
White spots appear.	The surrounding registration roller or paper tray can become dirty with paper dust if you use paper other than standard paper. Wipe any paper dust off both the paper tray and registration roller.
The backs of printed sheets are blemished.	• When removing a jammed sheet, the inside of the printer may have become dirty. Print several sheets until they come out clean. • If document size is larger than paper size, e.g. A4 document on B5 paper, the back of the next printed sheet may become dirty.
The Data In indicator is not flashing or lit.	If the Data In indicator is not flashing or lit, the data is not being sent to the printer. If the printer is connected to the computer using the interface cable. Check the port connection setting is correct. Network Connection Contact your network administrator.
Solid lines are printed as broken lines.	**Only when using PostScript 3** Change the [Dithering] setting in the printer driver's dialog box. See the printer driver Help.

Problem	Solution
Fine dot patterns do not print.	**Only when using PostScript 3** Change the [Dithering] setting in the printer driver's dialog box. See the printer driver Help.
If rubbed with your finger, the print smears.	The setting of the paper may not be correct. For example, although thick paper is used, the setting for thick paper may not be specified. • Check the paper settings of this printer. See page 28 "Loading Paper". • Check the paper settings of the printer driver. See the printer driver Help.

When Paper Is Not Fed or Ejected Properly

Problem	Solution
Prints fall in front of the machine when they are output.	Raise the stop fence. See Setup Guide.
Prints do not stack properly.	The paper being used may be damp. Use paper that has been stored properly. See page 45 "Supported Paper".
The printed paper is curled.	• Load the paper upside down in the paper tray. • If the paper curl is severe, retrieve prints from the output tray more frequently. • The paper being used may be damp. Use paper that has been stored properly. • If you enable [Toner Saving] under [System Settings], printing is generally less dense.
Printed envelopes come out creased.	Check if the fusing unit levers are properly set. Lower the fusing unit levers.

Other Printing Problems

Problem	Solution
The toner has run out and printing has stopped.	When the "Continue printing?" message appears on the control panel, pressing the [OK] key allows you to print a few more pages, but the print quality of those pages may be lower.

Common Problems

This section describes how to troubleshoot common problems that may occur while operating the machine.

Problem	Possible cause	Solution
The machine does not turn on.	The power cord is not connected properly.	• Make sure that the power plug is firmly inserted into the wall outlet. • Make sure that the wall outlet is not defective by connecting another working device.
An error message is shown on the machine's screen.	An error has occurred.	See page 139 "Error and Status Messages on the Control Panel".
The Alert indicator is lit or flashing.	An error has occurred.	See page 142 "Panel Indicator".
Pages do not print.	The machine is receiving data.	If the Data In indicator is flashing, the machine is receiving data. Wait for a while.
Pages are not printed.	The interface cable is not connected correctly.	• Reconnect the cable. • Check that the interface cable is the correct type.
Strange noise is heard.	The supplies are not properly installed.	Confirm that the supplies are properly installed.
The network setting may not have been configured properly or the 3G dongle may not be connected properly.	Using Web Image Monitor, check the setting and check whether printing can be performed.	If the problem persists, contact your service representative.

Note

- If any of these problems persist, turn off the power, pull out the power cord, and contact your sales or service representative.

8. Configuring Network Settings Using OS X

This chapter describes how to connect the machine to the network and specify the network settings using OS X.

Configurations differ according to the communication environment of your system.

Connecting the Machine to a Wired Network

The following procedure is explained using OS X 10.11 as an example.

Using a USB Cable

1. **Turn on your computer.**
2. **Insert the provided CD-ROM into the CD-ROM drive of the computer.**

   If your computer does not have a CD-ROM drive, download a setup file from our website.
3. **Double-click the CD-ROM drive icon.**
4. **Double-click the [macOS] folder.**
5. **Double-click the folder of driver you want to install.**
6. **Follow the instructions in the setup wizard.**
7. **Click [Close] in the [Summary] dialog box.**
8. **Start System Preferences.**
9. **Click [Printers & Scanners].**

   Check that the machine automatically recognized by plug-and-play appears in the printers list.
10. **Click the [+] button.**

    If [Add Printer or Scanner...] appears, click it.
11. **Click [Default].**
12. **Select the printer that has "USB" indicated in the [Kind] column.**
13. **Select the printer you are using from the [Use:] pop-up menu.**
14. **Click [Add].**
15. **Click [Duplexer] on the [Setting up] screen, and then click [OK].**
16. **Quit System Preferences.**

    Setup is completed.

Using an Ethernet Cable

1. **Turn on your computer.**
2. **Insert the provided CD-ROM into the CD-ROM drive of the computer.**

   If your computer does not have a CD-ROM drive, download a setup file from our website.
3. **Double-click the CD-ROM drive icon.**
4. **Double-click the [macOS] folder.**
5. **Double-click the folder of driver you want to install.**
6. **Follow the instructions in the setup wizard.**
7. **Click [Close] in the [Summary] dialog box.**
8. **Start System Preferences.**
9. **Click [Printers & Scanners].**
10. **Click the [+] button.**

    If [Add Printer or Scanner...] appears, click it.
11. **Click [Default].**
12. **Select the printer that has "Bonjour" indicated in the [Kind] column.**

    If the printer name is not displayed, select the icon that corresponds to your network environment (TCP/IP, etc.).
13. **Select the printer you are using from the [Use:] pop-up menu.**
14. **Click [Add].**
15. **Click [Duplexer] on the [Setting up] screen, and then click [OK].**
16. **Quit System Preferences.**
17. **Press the [Menu] key.**
18. **Press the [▼] or [▲] key to select [Network Settings], and then press the [OK] key.**
19. **Press the [▼] or [▲] key to select [DHCP], and then press the [OK] key.**
20. **Press the [▼] or [▲] key to select [Active] to automatically obtain the IP address or [Inactive] to specify the IP address manually.**

    If you have selected [Active], proceed to Step 26.
21. **Press the [▼] or [▲] key to select [IP Address], and then press the [OK] key.**
22. **Enter the machine's IPv4 address, and then press the [OK] key.**
23. **Press the [▼] or [▲] key to select [Subnet Mask], and then press the [OK] key.**
24. **Enter the subnet mask, and then press the [OK] key.**
25. **Press the [▼] or [▲] key to select [Gateway Address], and then press the [OK] key.**
26. **Enter the gateway address, and then press the [OK] key.**

27. Turn off the machine, and then turn it back on.

Setup is completed.

Connecting the Machine to a Wireless Network

There are four methods for connecting the machine to a wireless network:

- Using the Wi-Fi Setup Wizard

  See page 173 "Using the Wi-Fi Setup Wizard".
- Using the WPS button

  See page 174 "Using the WPS Button".
- Using a PIN code

  See page 175 "Using a PIN Code".

Installing the Printer Driver

The following procedure is explained using OS X 10.11 as an example.

1. **Turn on your computer.**
2. **Insert the provided CD-ROM into the CD-ROM drive of the computer.**

   If your computer does not have a CD-ROM drive, download a setup file from our website.
3. **Double-click the CD-ROM drive icon.**
4. **Double-click the [macOS] folder.**
5. **Double-click the folder of driver you want to install.**
6. **Follow the instructions in the setup wizard.**
7. **Click [Close] in the [Summary] dialog box.**

Installing Smart Organizing Monitor

The following procedure is explained using OS X 10.11 as an example.

1. **Turn on your computer.**
2. **Insert the provided CD-ROM into the CD-ROM drive of the computer.**

   If your computer does not have a CD-ROM drive, download a setup file from our website.
3. **Double-click the CD-ROM drive icon.**
4. **Double-click the [Mac OS X] folder.**
5. **Double-click the [Utility] folder.**
6. **Double-click the package file icon.**
7. **Follow the instructions in the setup wizard.**

8. **If the [Printer Driver Selection] dialog box appears, do one of the following:**
   - Select the machine's model.
   - Enter the IP address of the machine manually.
   - Click [Search Network Printer] to search the machine via the network.
9. **Click [OK].**
10. **Click [Close] in the [Summary] dialog box.**

Using the Wi-Fi Setup Wizard

A router (access point) is needed to set up a connection.

Checking the SSID and encryption key

The SSID and Encryption key for the router (access point) may be printed on a label affixed to the router (access point). For details about the SSID and Encryption key, refer to the router (access point) manual.

Configuring settings using the control panel

Before doing the following procedure, install the printer driver according to the procedure on page 172 "Installing the Printer Driver".

Make sure the Ethernet cable is not connected to the machine

1. **Check that the router (access point) is working correctly.**
2. **Press the [Menu] key.**
3. **Press the [▼] or [▲] key to select [Network Settings], and then press the [OK] key.**
4. **Press the [▼] or [▲] key to select [Wireless (Wi-Fi)], and then press the [OK] key.**
5. **Press the [▼] or [▲] key to select [Enable Wireless (Wi-Fi)], and then press the [OK] key.**
6. **Press the [▼] or [▲] key to select [Enable], and then press the [OK] key.**
7. **Press the [Menu] key to return to the Initial screen.**
8. **Turn off the machine, and then turn it back on.**
9. **Press the [Menu] key.**
10. **Press the [▼] or [▲] key to select [Wi-Fi Setup Wizard], and then press the [OK] key.**
11. **Press the [▼] or [▲] key to select SSID of the router (access point) from the searched SSID list, and then press the [OK] key.**
12. **Enter the encryption key using the [▼] or [▲] key, and then press the [OK] key.**

    As the passphrase, you can enter either 8 to 63 ASCII characters (0x20-0x7e) or 64 hexadecimal digits (0-9, A-F, a-f).

    To go to the next characters, press the [OK] key.

13. **Press the [OK] key.**

    After connecting to the network, the menu screen is displayed.

14. **Press the [▼] or [▲] key to select [Wi-Fi Status], and then press the [OK] key.**

    When "Connected" is displayed, the connection has been established.

    - When "Connecting" is displayed, the connection is being established.
    - When "Disconnected" is displayed, the connection has not been established. Start again from the beginning.

Using the WPS Button

A router (access point) is needed to set up a connection.

Before doing the following procedure, install the printer driver according to the procedure on page 172 "Installing the Printer Driver".

Make sure the Ethernet cable is not connected to the machine.

1. **Check that the router (access point) is working correctly.**
2. **Press the [Menu] key.**
3. **Press the [▼] or [▲] key to select [Network Settings], and then press the [OK] key.**
4. **Press the [▼] or [▲] key to select [Wireless (Wi-Fi)], and then press the [OK] key.**
5. **Press the [▼] or [▲] key to select [Enable Wireless (Wi-Fi)], and then press the [OK] key.**
6. **Press the [▼] or [▲] key to select [Enable], and then press the [OK] key.**
7. **Press the [Menu] key to return to the Initial screen.**
8. **Turn off the machine, and then turn it back on.**
9. **Press the [Menu] key.**
10. **Press the [▼] or [▲] key to select [Network Settings], and then press the [OK] key.**
11. **Press the [▼] or [▲] key to select [Wireless (Wi-Fi)], and then press the [OK] key.**
12. **Press the [▼] or [▲] key to select [WPS], and then press the [OK] key.**
13. **Press the [▼] or [▲] key to select [PBC], and then press the [OK] key.**

    ""PBC Executing..."" appears, and the machine starts to connect in PBC method.

14. **Press the WPS button on the router (access point) within two minutes.**

    For details about how to use the WPS button, refer to the manuals for the router (access point).

15. **Check the result.**

    - Connection has succeeded:

      Press the [Menu] key.

    - Connection has failed:

Press the [Back] key to return to the screen displayed in Step 15.

Check the configuration for the router (access point), then try the connection again.

Using a PIN Code

A router (access point) is needed to set up a connection. To establish a connection using the PIN code, use a computer that is connected to the router (access point).

Before doing the following procedure, install the printer driver according to the procedure on page 172 "Installing the Printer Driver".

Make sure the Ethernet cable is not connected to the machine.

1. **Check that the router (access point) is working correctly.**
2. **Open the PIN code configuration window (web page) for the router (access point) on your computer.**
3. **Press the [Menu] key.**
4. **Press the [▼] or [▲] key to select [Network Settings], and then press the [OK] key.**
5. **Press the [▼] or [▲] key to select [Wireless (Wi-Fi)], and then press the [OK] key.**

1. **Press the [▼] or [▲] key to select [Enable Wireless (Wi-Fi)], and then press the [OK] key.**
2. **Press the [▼] or [▲] key to select [Enable], and then press the [OK] key.**
3. **Press the [Menu] key to return to the Initial screen.**
4. **Turn off the machine, and then turn it back on.**
5. **Press the [Menu] key.**
6. **Press the [▼] or [▲] key to select [Network Settings], and then press the [OK] key.**
7. **Press the [▼] or [▲] key to select [Wireless (Wi-Fi).], and then press the [OK] key.**
8. **Press the [▼] or [▲] key to select [WPS], and then press the [OK] key.**
9. **Press the [▼] or [▲] key to select [PIN], and then press the [OK] key.**
10. **Check the PIN code.**
11. **Enter the machine's PIN code (8 digits) on the router (access point)'s web page.(The web page accessed in Step 2**
12. **Execute WPS (PIN system) from the router (access point)'s web page.**
13. **Check the result.**
    - Connection has succeeded:

      Press the [Exit] key

      Configuring the Wi-Fi settings is complete.
    - Connection has failed:

Press the [Exit] key to return to the screen displayed in Step 16. Check the configuration for the router (access point), then try the connection again.

9. Appendix

This chapter describes the machine specifications and consumables.

Transmission Using IPsec

For securer communications, this machine supports the IPsec protocol. When applied, IPsec encrypts data packets at the network layer using shared key encryption. The machine uses encryption key exchange to create a shared key for both sender and receiver. To achieve even higher security, you can also renew the shared key on a validity period basis.

Important

- IPsec is not applied to data obtained through DHCP or DNS.
- IPsec compatible operating systems are Windows 7 or later, Windows Server 2008 or later, OS X 10.9 or later, Red Hat Enterprise Linux 6 or later. However, some setting items are not supported depending on the operating system. Make sure the IPsec settings you specify are consistent with the operating system's IPsec settings.
- If you cannot access Web Image Monitor due to IPsec configuration problems, disable IPsec under [Admin. Tools] on the control panel, and then access Web Image Monitor.
- For details about specifying the IPsec settings using Web Image Monitor, see page 94 "Using Web Image Monitor".

Encryption and Authentication by IPsec

IPsec consists of two main functions: the encryption function, which ensures the confidentiality of data, and the authentication function, which verifies the sender of the data and the data's integrity. This machine's IPsec function supports two security protocols: the ESP protocol, which enables both of the IPsec functions at the same time, and the AH protocol, which enables only the authentication function.

ESP Protocol

The ESP protocol provides secure transmission through both encryption and authentication. This protocol does not provide header authentication.

- For successful encryption, both the sender and receiver must specify the same encryption algorithm and encryption key. The encryption algorithm and encryption key are specified automatically.
- For successful authentication, the sender and receiver must specify the same authentication algorithm and authentication key. The authentication algorithm and authentication key are specified automatically.

AH Protocol

The AH protocol provides secure transmission through authentication of packets only, including headers.

- For successful authentication, the sender and receiver must specify the same authentication algorithm and authentication key. The authentication algorithm and authentication key are specified automatically.

AH Protocol + ESP Protocol

When combined, the ESP and AH protocols provide secure transmission through both encryption and authentication. These protocols provide header authentication.

- For successful encryption, both the sender and receiver must specify the same encryption algorithm and encryption key. The encryption algorithm and encryption key are specified automatically.
- For successful authentication, the sender and receiver must specify the same authentication algorithm and authentication key. The authentication algorithm and authentication key are specified automatically.

Note

- Some operating systems use the term "Compliance" in place of "Authentication".

Security Association

This machine uses encryption key exchange as the key setting method. With this method, agreements such as the IPsec algorithm and key must be specified for both sender and receiver. Such agreements form what is known as an SA (Security Association). IPsec communication is possible only if the receiver's and sender's SA settings are identical.

The SA settings are auto configured on both parties' machines. However, before the IPsec SA can be established, the ISAKMP SA (Phase 1) settings must be auto configured. When this is done, the IPsec SA (Phase 2) settings, which allow actual IPsec transmission, will be auto configured.

Also, for further security, the SA can be periodically auto updated by applying a validity period (time limit) for its settings. This machine only supports IKEv1 for encryption key exchange.

Multiple settings can be configured in the SA.

Settings 1-10

You can configure ten separate sets of SA details (such as different shared keys and IPsec algorithms).

IPsec policies are searched through one by one, starting at [No.1].

Encryption Key Exchange Settings Configuration Flow

This section explains the procedure for specifying encryption key exchange settings.

Machine	PC
1. Set the IPsec settings on Web Image Monitor.	1. Set the same IPsec settings as the machine on PC.
2. Enable IPsec settings.	2. Enable IPsec settings.
3. Confirm IPsec transmission.	

Note

- After configuring IPsec, you can use "ping" command to check if the connection is established correctly. Because the response is slow during initial key exchange, it may take some time to confirm that transmission has been established.
- If you cannot access Web Image Monitor due to IPsec configuration problems, disable IPsec under [Admin. Tools] on the control panel, and then access Web Image Monitor.

Specifying Encryption Key Exchange Settings

Important

- This function is available only when an administrator password is specified.

1. **Start the web browser and access the machine by entering its IP address.**
2. **Click [IPsec Settings].**
3. **Click the [IPsec Policy List] tab.**
4. **Select the number of the setting you want to modify in the list, and then click [Change].**
5. **Modify the IPsec related settings as necessary.**
6. **Enter the administrator password, and then click [Apply].**
7. **Click the [IPsec Global Settings] tab, and then select [Active] in [IPsec Function].**
8. **If necessary, specify [Default Policy], [Broadcast and Multicast Bypass], and [All ICMP Bypass] also.**
9. **Enter the administrator password, and then click [Apply].**

Note

- An administrator password can be specified in the [Administrator] tab.

Specifying IPsec Settings on the Computer

Specify exactly the same settings for IPsec SA settings on your computer as are specified for the IPsec Settings on the machine. Setting methods differ according to the computer's operating system. The following procedure is based on Windows 10 in an IPv4 environment as an example.

1. **On the [Start] menu, click [Control Panel], [System and Security], and then click [Administrative Tools].**
2. **Double-click [Local Security Policy], and then click [IP Security Policies on Local Computer].**
3. **In the "Action" menu, click [Create IP Security Policy...].**

   The IP Security Policy Wizard appears.
4. **Click [Next].**
5. **Enter a security policy name in "Name", and then click [Next].**
6. **Clear the "Activate the default response rule" check box, and then click [Next].**
7. **Select "Edit properties", and then click [Finish].**
8. **In the "General" tab, click [Settings...].**
9. **In "Authenticate and generate a new key after every", enter the same validity period (in minutes) that is specified on the machine in [IKE Life Time], and then click [Methods...].**
10. **Confirm that the Encryption Algorithm ("Encryption"), Hash Algorithm ("Integrity"), and IKE Diffie-Hellman Group ("Diffie-Hellman Group") settings in "Security method preference order" all match those specified on the machine in [IKE Settings].**

    If the settings are not displayed, click [Add...].
11. **Click [OK] twice.**
12. **Click [Add...] in the "Rules" tab.**

    The Security Rule Wizard appears.
13. **Click [Next].**
14. **Select "This rule does not specify a tunnel", and then click [Next].**
15. **Select the type of network for IPsec, and then click [Next].**
16. **Click [Add...] in the IP Filter List.**
17. **In [Name], enter an IP Filter name, and then click [Add...].**

    The IP Filter Wizard appears.
18. **Click [Next].**
19. **In [Description:], enter a name or a detailed explanation of the IP filter, and then click [Next].**

    You may click [Next] and proceed to the next step without entering any information in this field.

20. **Select "My IP Address" in "Source address", and then click [Next].**
21. **Select "A specific IP Address or Subnet" in "Destination address", enter the machine's IP address, and then click [Next].**
22. **For the IPsec protocol type, select "Any", and then click [Next].**
23. **Click [Finish], and then click [OK].**
24. **Select the IP filter that you have just created, and then click [Next].**
25. **Click [Add...] in the Filter Action.**

    The Filter Action Wizard appears.
26. **Click [Next].**
27. **In [Name], enter a Filter Action name, and then click [Next].**
28. **Select "Negotiate security", and then click [Next].**
29. **Select "Allow unsecured communication if a secure connection cannot be established.", and then click [Next].**
30. **Select "Custom" and click [Settings].**
31. **In "Integrity algorithm", select the authentication algorithm that was specified on the machine in "Encryption Key Auto Exchange Settings Phase 2".**
32. **In "Encryption algorithm", select the encryption algorithm that specified on the machine in "Encryption Key Auto Exchange Settings Phase 2".**
33. **In "Session key settings", select "Generate a new key every", and enter the validity period (in seconds) that was specified on the machine in "Encryption Key Auto Exchange Settings Phase 2".**
34. **Click [OK].**
35. **Click [Next].**
36. **Click [Finish].**
37. **Select the filter action that you have just created, and then click [Next].**
38. **Select one of options for an authentication method, and then click [Next].**
39. **Click [Finish], and then click [OK].**

    The new IP security policy (IPsec settings) is specified.
40. **Select the security policy that you have just created, right click on it, and then click [Assign].**

    IPsec settings on the computer are enabled.

Note

- To disable the computer's IPsec settings, select the security policy, right click, and then click [Unassign].

Enabling and Disabling IPsec Using the Control Panel

1. Press the [Menu] key.
2. Press the [▲] or [▼] key to select [Admin. Tools], and then press the [OK] key.
3. Press the [▲] or [▼] key to select [IPSec], and then press the [OK] key.
4. Press the [▲] or [▼] key to select [Active] or [Inactive] and then press the [OK] key.
5. Press the [Menu] key to return to the initial screen.

Notes About the Toner

- Proper operation cannot be guaranteed if any third-party toner is used.
- Depending on printing conditions, there are cases where the printer cannot print the number of sheets indicated in the specifications.
- Replace the print cartridge if the printed image suddenly becomes pale or blurred.
- When operating the machine for the first time, use the print cartridge supplied with this machine. If this cartridge is not initially used, the following problems may occur:
  - "Replace Required Soon:" will be displayed before the toner runs out.
  - "Replacement Required:" will be displayed when the toner runs out, but instead the printed image suddenly becomes pale or blurred.
- The lifetime of the photo conductor, which is built into the print cartridge, is taken into account in displaying "Replace Required Soon:". If the photo conductor stops working before the toner runs out, "Replace Required Soon:" may be displayed.

Specifications of the Machine

This section lists the machine's specifications.

Note

- We have obtained each author's permission for the use of applications including open-source software applications. For details about the copyright information for these software applications, see "OSS.pdf" on the CD-ROM supplied with the machine.

General Function Specifications

Item	Description
Configuration	Desktop
Print process	Laser electrostatic transfer
Maximum paper size for printing	Legal ($8^1/_2$ × 14 inches)
Warm-up time (23 °C, 71.6 °F)	xx seconds or less
Paper sizes	For details, see page 45 "Supported Paper".
Paper type	For details, see page 45 "Supported Paper".
Paper output capacity (80 g/m^2, 20 lb)	125 sheets
Paper input capacity (80 g/m^2, 20 lb)	• Tray 1 250 sheets • Bypass tray 50 sheets
Memory	xxMB
Power requirements	Region A xxx-xxx V, xx A, xx Hz Region B xxx-xxx V, xx A, xx Hz

Item	Description
Power consumption Region A The power level when the main switch is turned off and the power cord is plugged into an outlet: 1 W or less	• Maximum xxxx W or less • Ready xx W • During printing xx W
Power consumption Region B The power level when the main switch is turned off and the power cord is plugged into an outlet: 1 W or less	• Maximum xxxx W or less • Ready xx W • During printing xx W
Noise emission	• Sound power level Stand-by: xx dB (A) During printing: xx dB (A) • Sound pressure level Stand-by: xx dB (A) During printing: xx dB (A)
Machine dimensions (Width × Depth × Height)	370 × 392 ×262 mm (14.6 × 15.4 × 10.3 inches)
Weight (machine body with consumables)	13 kg (28.7 lb.) or less

Note

- Sound power level and sound pressure level are actual values measured in accordance with ISO 7779.
- Sound pressure level is measured from the position of the bystander.

Printer Function Specifications

Item	Description
Printing speed	32 pages per minute (A4/600dpi), 14 pages per minute (A4/1200dpi) 34 pages per minute (Letter/600dpi), 15 pages per minute (Letter/1200dpi)
Resolution	600 × 600 dpi (maximum: 1200 × 1200 dpi)
First print speed	xx seconds or less
Interface	• Ethernet (10BASE-T, 100BASE-TX) • USB 2.0 • USB2.0 Host
Printer language	PCL6, PCL5e, PostScript3
Fonts (PCL6, PCL5c, PostScript3)	80 fonts

Paper Feed Unit PB1130

Paper capacity

500 sheets

Paper size

For details, see page 45 "Supported Paper".

Dimensions (Width × Depth × Height)

370 × 392 × 89 mm (14.6 × 15.4 × 3.5 inches)

Paper weight

For details, see page 45 "Supported Paper".

Weight

Less than 3 kg (6.6 lb.)

Consumables

CAUTION

- Our products are engineered to meet high standards of quality and functionality, and we recommend that you use only the expendable supplies available at an authorized dealer.

Print Cartridge

Print cartridge	Average printable number of pages per cartridge *1
Black	xxxx pages

*1 The printable number of pages is based on pages that are compliant with ISO/IEC 19798 and the image density set as the factory default. ISO/IEC 19798 is an international standard on measurement of printable pages, set by the International Organization for Standardization.

Note

- For information about consumables, see our website.
- If print cartridges are not changed when necessary, printing will become impossible. For easy replacement, we recommend you purchase and store extra print cartridges.
- The actual number of printable pages varies depending on the image volume and density, number of pages printed at a time, paper type and paper size used, and environmental conditions such as temperature and humidity.
- Print cartridges may need to be changed sooner than indicated above due to deterioration over the period of use.
- Print cartridges (consumables) are not covered by warranty. However, if there is a problem, contact the store where they were purchased.
- When you first use this machine, use the print cartridges packaged with the machine.
- The supplied print cartridges are good for approximately 1,000 pages.
- This machine routinely performs cleaning and uses toner during this operation to maintain quality.
- To prevent a cleaning malfunction, you may need to replace a print cartridge even if it is not empty.

Information for This Machine

User Information on Electrical & Electronic Equipment Region A (mainly Europe and Asia)

Users in the countries where this symbol shown in this section has been specified in national law on collection and treatment of E-waste

Our Products contain high quality components and are designed to facilitate recycling.

Our products or product packaging are marked with the symbol below.

The symbol indicates that the product must not be treated as municipal waste. It must be disposed of separately via the appropriate return and collection systems available. By following these instructions you ensure that this product is treated correctly and help to reduce potential impacts on the environment and human health, which could otherwise result from inappropriate handling. Recycling of products helps to conserve natural resources and protect the environment.

For more detailed information on collection and recycling systems for this product, please contact the shop where you purchased it, your local dealer or sales/service representatives.

All Other Users

If you wish to discard this product, please contact your local authorities, the shop where you bought this product, your local dealer or sales/service representatives.

For Users in India

This product including components, consumables, parts and spares complies with the "India E-waste Rule" and prohibits use of lead, mercury, hexavalent chromium, polybrominated biphenyls or polybrominated diphenyl ethers in concentrations exceeding 0.1 weight % and 0.01 weight % for cadmium, except for the exemptions set in the Rule.

For Turkey only

AEEE Yönetmeliğine Uygundur.
Bu sistem sarf malzemeleri ve yedek parçaları da dahil olmak üzere AEEE Yönetmeliğine Uygundur.

Üretici:

Ricoh Company, Ltd.

3-6, Nakamagome 1-chome,
Ohta-ku, Tokyo 143-8555 Japan

+81-3-3777-8111(English only/Sadece İngilizce)

Note for the Battery and/or Accumulator Symbol (For EU countries only)

In accordance with the Battery Directive 2006/66/EC Article 20 Information for end-users Annex II, the above symbol is printed on batteries and accumulators.

This symbol means that in the European Union, used batteries and accumulators should be disposed of separately from your household waste.

In the EU, there are separate collection systems for not only used electrical and electronic products but also batteries and accumulators.

Please dispose of them correctly at your local community waste collection/recycling centre.

Environmental Advice for Users Region A (mainly Europe)

Users in the EU, Switzerland and Norway

Consumables yield

Please refer to either the User's Manual for this information or the packaging of the consumable.

Recycled paper

The machine can use recycled paper which is produced in accordance with European standard EN 12281:2002 or DIN 19309. For products using EP printing technology, the machine can print on 64 g/m^2 paper, which contains less raw materials and represents a significant resource reduction.

Duplex printing (if applicable)

Duplex printing enables both sides of a sheet of paper to be used. This saves paper and reduces the size of printed documents so that fewer sheets are used. We recommend that this feature is enabled whenever you print.

Toner and ink cartridge return program

Toner and ink cartridge for recycling will be accepted free of charge from users in accordance with local regulations.

For details about the return program, please refer to the Web page below or consult your service person.

https://www.ricoh-return.com/

Energy efficiency

The amount of electricity a machine consumes depends as much on its specifications as it does on the way you use it. The machine is designed to allow you to reduce electricity costs by switching to Ready mode after it prints the last page. If required, it can immediately print again from this mode. If no additional prints are required and a specified period of time passes, the device switches to an energy saving mode.

In these modes, the machine consumes less power (watts). If the machine is to print again, it needs a little longer to return from an energy saving mode than from Ready mode.

For maximum energy savings, we recommend that the default setting for power management is used.

Products that comply with the Energy Star requirement are always energy efficient.

Notice To Wireless LAN Interface Users Region A (mainly Europe)

CE

Declaration of Conformity

Notice to Users in EEA Countries

This product complies with the essential requirements and provisions of Directive 2014/53/EU.

The CE Declaration of Conformity is available by accessing the URL: http://www.ricoh.com/products/ce_doc2/

and selecting the product applicable.

Operating frequency band: 2400 - 2483.5 MHz

maximum radio-frequency power: less than 20.0 dBm

As this equipment with the radiating part is not intended to be used in close proximity to the human body, it is recommended to use at least 20cm apart from the user.

Notes to users in the state of California (Notes to Users in USA)

Perchlorate Material - special handling may apply. See: www.dtsc.ca.gov/hazardouswaste/perchlorate

Notes to users in the United States of America

Part 15 of the FCC Rules

Note:

This equipment has been tested and found to comply with the limits for a Class B digital device, pursuant to Part 15 of the FCC Rules. These limits are designed to provide reasonable protection against harmful interference in a residential installation. This equipment generates, uses and can radiate radio frequency energy and, if not installed and used in accordance with the instructions, may cause harmful interference to radio communications. However, there is no guarantee that interference will not occur in a particular installation. If this equipment does cause harmful interference to radio or television reception, which can be determined by turning the equipment off and on, the user is encouraged to try to correct the interference by one or more of the following measures:

- Reorient or relocate the receiving antenna.
- Increase the separation between the equipment and receiver.
- Connect the equipment into an outlet on a circuit different from that to which the receiver is connected.
- Consult the dealer or an experienced radio /TV technician for help.

This transmitter must not be co-located or operated in conjunction with any other antenna or transmitter.

Caution:

Changes or modifications not expressly approved by the party responsible for compliance could void the user's authority to operate the equipment.

This equipment complies with FCC radiation exposure limits set forth for an uncontrolled environment and meets the FCC radio frequency (RF) Exposure Guidelines. This equipment has very low levels of RF energy that it deemed to comply without maximum permissive exposure evaluation (MPE). But it is desirable that it should be installed and operated keeping the radiator at least 20cm or more away from person's body (excluding extremities: hands, wrists, feet and ankles).

Certification

This device complies with Part 15 of the FCC Rules.

Operation is subject to the following two conditions:

(1) This device may not cause harmful interference, and

(2) this device must accept any interference received, including interference that may cause undesired operation.

Notes to Canadian Users of Wireless Devices

This device complies with Industry Canada's licence-exempt RSSs.

Operation is subject to the following two conditions:

(1) This device may not cause interference; and

(2) This device must accept any interference, including interference that may cause undesired operation of the device.

This equipment complies with IC radiation exposure limits set forth for an uncontrolled environment and meets RSS-102 of the IC radio frequency (RF) Exposure rules. This equipment should be installed and operated keeping the radiator at least 20cm or more away from person's body (excluding extremities: hands, wrists, feet and ankles).

5150-5250 MHz band is restricted to indoor operation only.

High-power radars are allocated as primary users (i.e. priority users) of the bands 5250-5350 MHz and 5650-5850 MHz and these radars could cause interference and/or damage to LE-LAN devices.

Compliance with IC requirement RSS-210 A9.4.4 Data transmission is always initiated by software, which is the passed down through the MAC, through the digital and analog baseband, and finally to the RF chip. Several special packets are initiated by the MAC. These are the only ways the digital baseband portion will turn on the RF transmitter, which it then turns off at the end of the packet. Therefore, the transmitter will be on only while one of the aforementioned packets is being transmitted. In other words, this device automatically discontinue transmission in case of either absence of information to transmit or operational failure.

Remarques à l'attention des utilisateurs canadiens d'appareils sans fil

Le présent appareil est conforme aux CNR d'Industrie Canada applicables aux appareils radio exempts de licence.

L'exploitation est autorisée aux deux conditions suivantes :

(1) l'appareil ne doit pas produire de brouillage, et

(2) l'utilisateur de l'appareil doit accepter tout brouillage

radioélectrique subi, même si le brouillage est susceptible d'en compromettre le fonctionnement.

Cet équipement est conforme aux limites d'exposition aux rayonnements énoncées pour un environnement non contrôlé et respecte les règles d'exposition aux fréquences radioélectriques (RF) CNR-102 de l'IC. Cet équipement doit être installé et utilisé en gardant une distance de 20 cm ou plus entre le radiateur et le corps humain.(à l'exception des extrémités : mains, poignets, pieds et chevilles)

La bande 5150-5250 MHz est restreinte à une utilisation à l'intérieur seulement.

Les utilisateurs de radars de haute puissance sont désignés utilisateurs principaux (c.-à-d., qu'ils ont la priorité) pour les bandes 5 250 - 5 350 MHz et 5 650 - 5 850 MHz et ces radars pourraient causer du brouillage et/ou des dommages aux périphériques LE-LAN.

Conformité à la norme CNR-210 A9.4.4 La transmission des données est toujours initiée par le logiciel, puis les données sont transmises par l'intermédiaire du MAC, par la bande de base numérique et analogique et, enfin, à la puce RF. Plusieurs paquets spéciaux sont initiés par le MAC. Ce sont les seuls moyens pour qu'une partie de la bande de base numérique active l'émetteur RF, puis désactive celui-ci à la fin du paquet. En conséquence, l'émetteur reste uniquement activé lors de la transmission d'un des paquets susmentionnés. En d'autres termes, ce dispositif interrompt automatiquement toute transmission en cas d'absence d'information à transmettre ou de défaillance.

ENERGY STAR Program

ENERGY STAR® Program Requirements for Imaging Equipment

The ENERGY STAR® Program Requirements for Imaging Equipment encourage energy conservation by promoting energy efficient computers and other office equipment.

The program backs the development and dissemination of products that feature energy saving functions.

It is an open program in which manufacturers participate voluntarily.

Targeted products are computers, monitors, printers, facsimiles, copiers, scanners, and multifunction devices. Energy Star standards and logos are internationally uniform.

Saving Energy

This machine is equipped with the following Energy Saver modes: Energy Saver mode 1 and Energy Saver mode 2. If the machine has been idle for a certain period of time, the machine automatically enters Energy Saver mode.

The machine recovers from Energy Saver mode when it receives a print job or when any key is pressed.

Energy Saver mode 1

The machine enters Energy Saver mode 1 if the machine has been idle for about 30 seconds. It takes less time to recover from Energy Saver mode 1 than from power-off state or Energy Saver mode 2, but power consumption is higher in Energy Saver mode 1 than in Energy Saver mode 2.

Energy Saver mode 2

The machine enters Energy Saver mode 2 after the period of time specified for this setting is passed. Power consumption is lower in Energy Saver mode 2 than in Energy Saver mode 1, but it takes longer to recover from Energy Saver mode 2 than from Energy Saver mode 1.

Specifications

Energy Saver mode 1	Power Consumption *1	Region A xx W Region B xx W
	Default Time	xx seconds
	Recovery Time *1	xx seconds or less
Energy Saver mode 2	Power Consumption *1	xx W
	Default Time	xx minute
	Recovery Time *1	xx seconds
Duplex Function *2		Standard

*1 Recovery time and power consumption may differ depending on the conditions and environment of the machine.

*2 Achieves ENERGY STAR energy savings; product fully qualifies when packaged with (or used with) a duplex tray and the duplex function is enabled as an option.

For details about Energy Saver modes, see page 81 "System Settings Menu".

Note

- If the machine is in Energy Saver mode for 24 hours continuously, the machine automatically returns to normal state and performs self-maintenance.

Trademarks

Adobe and Acrobat are either registered trademarks or trademarks of Adobe Systems Incorporated in the United States and/or other countries.

Android and Google Play are trademarks or registered trademarks of Google Inc.

OS X, TrueType, App Store, and Safari are trademarks of Apple Inc., registered in the U.S. and other countries.

Firefox® is a registered trademark of the Mozilla Foundation.

iOS is a trademark or registered trademark of Cisco in the U.S. and other countries and is used under license.

Java is a registered trademark of Oracle and/or its affiliates.

LINUX® is the registered trademark of Linus Torvalds in the U.S. and other countries.

Microsoft®, Windows®, Windows Server®, Windows Vista®, and Internet Explorer® are either registered trademarks or trademarks of Microsoft Corporation in the United States and/or other countries.

Mopria and the Mopria logo are trademarks of Mopria Alliance, Inc.

PCL® is a registered trademark of Hewlett-Packard Company.

PictBridge is a trademark.

QR Code is a registered trademark of DENSO WAVE INCORPORATED in Japan and in other countries.

Red Hat is a registered trademark of Red Hat, Inc.

Wi-Fi® and Wi-Fi Direct® are registered trademarks of Wi-Fi Alliance.

The proper name of Internet Explorer 6 is Microsoft® Internet Explorer® 6.

The proper names of the Windows operating systems are as follows:

- The product names of Windows Vista are as follows:

  Microsoft® Windows Vista® Ultimate

  Microsoft® Windows Vista® Business

  Microsoft® Windows Vista® Home Premium

  Microsoft® Windows Vista® Home Basic

  Microsoft® Windows Vista® Enterprise
- The product names of Windows 7 are as follows:

Microsoft® Windows® 7 Starter

Microsoft® Windows® 7 Home Premium

Microsoft® Windows® 7 Professional

Microsoft® Windows® 7 Ultimate

Microsoft® Windows® 7 Enterprise

- The product names of Windows 8.1 are as follows:

  Microsoft® Windows® 8.1

  Microsoft® Windows® 8.1 Pro

  Microsoft® Windows® 8.1 Enterprise

- The product names of Windows 10 are as follows:

  Microsoft® Windows® 10 Home Premium

  Microsoft® Windows® 10 Pro

  Microsoft® Windows® 10 Enterprise

  Microsoft® Windows® 10 Education

- The product names of Windows Server 2008 are as follows:

  Microsoft® Windows Server® 2008 Foundation

  Microsoft® Windows Server® 2008 Standard

  Microsoft® Windows Server® 2008 Enterprise

  Microsoft® Windows Server® 2008 Datacenter

  Microsoft® Windows Server® 2008 for Itanium-based Systems

  Microsoft® Windows® Web Server 2008

  Microsoft® Windows® HPC Server 2008

- The product names of Windows Server 2008 R2 are as follows:

  Microsoft® Windows Server® 2008 R2 Foundation

  Microsoft® Windows Server® 2008 R2 Standard

  Microsoft® Windows Server® 2008 R2 Enterprise

  Microsoft® Windows Server® 2008 R2 Datacenter

  Microsoft® Windows Server® 2008 R2 for Itanium-based Systems

  Microsoft® Windows® Web Server R2 2008

  Microsoft® Windows® HPC Server R2 2008

- The product names of Windows Server 2012 are as follows:

  Microsoft® Windows Server® 2012 Foundation

  Microsoft® Windows Server® 2012 Essentials

Microsoft® Windows Server® 2012 Standard

Microsoft® Windows Server® 2012 Datacenter

- The product names of Windows Server 2012 R2 are as follows:

  Microsoft® Windows Server® 2012 R2 Foundation

  Microsoft® Windows Server® 2012 R2 Essentials

  Microsoft® Windows Server® 2012 R2 Standard

  Microsoft® Windows Server® 2012 R2 Datacenter

- The product names of Windows Server 2016 are as follows:

  Microsoft® Windows Server® 2016 Datacenter

  Microsoft® Windows Server® 2016 Standard

  Microsoft® Windows Server® 2016 Essentials

Other product names used herein are for identification purposes only and might be trademarks of their respective companies. We disclaim any and all rights to those marks.

Microsoft product screen shots reprinted with permission from Microsoft Corporation.

INDEX

A

Admin. Tools Menu....75
Administrator password....121
Administrator settings....121
Attaching Paper Feed Unit TK1220....18
Authentication....177
Auto e-mail notification settings....107

B

Backup settings....121
Bypass tray....32, 101
Bypass tray setting priority....100

C

Cleaning....133, 134
Community....108
Confidential document....66
Configuration page....120, 128
Configuring Network Settings Using OS X
- Ethernet....170
- Installing the driver....172
- USB....169
- Wireless LAN....172

Configuring the machine
- Printing the configuration page....128
- Using Smart Organizing Monitor....125

Confirming information
- Printer driver settings....60
- Status information....125

Consumables....187
Copy
- Copying onto envelopes....34

Counter information....99

D

Default settings....121
Disclaimer....10
DNS setting....106
Duplex....99

E

E-mail notification 1....107
E-mail notification 2....107
Encryption....177
Encryption key exchange....179
Energy saver mode....123, 193
Error messages....139
Extending tray 1....31
Exterior....13

G

General status....104

I

I/O timeout....103
IKE settings....116
Installing Smart Organizing Monitor
- Installing Smart Organizing Monitor....172

Interior....15
Introduction....9
IPsec global settings....116
IPsec policy settings....116
IPsec settings....116
IPsec transmission....177
IPv6 configuration....105
IPv6 environment....105

J

Job cancel....64

L

Language....96
List/Test Print....91
Lists....120
Loading paper....28
Locked Print....67

M

Machine information....99
Machine settings....126
Maintaining the machine
- Cleaning the machine....133, 134
- Replacing the print cartridge....129

Maintenance page....120
mDNS setting....105
Menu chart....74
Messages....139
Model-specific information....9
Moving....137

N

Network application.....105
Network print setting.....105
Network settings.....104
Network Settings Menu.....87
Network status.....104
Non-recommended paper.....54
Notes.....183

O

Operation Tools.....22
Option settings.....58

P

Page counter.....99
Paper Feed Unit TK1220.....18, 186
Paper jam.....145, 147, 149
Paper mismatch.....63
Paper size.....37
Paper Storage.....55
Paper tray.....98
Paper types.....48
- Bond Paper.....48
- Cardstock.....48
- Color Paper.....48
- Envelope.....48
- Label Paper.....48
- Letterhead.....48
- Plain Paper.....48
- Preprinted Paper.....48
- Prepunched Paper.....48
- Recycled Paper.....48
- Thick Paper 1.....48
- Thick Paper 2.....48
- Thin Paper.....48

PCL6.....124
POP3 settings.....109
Print
- Basic operation.....62
- Combine.....57
- Duplex.....57
- Printing on envelopes.....34
- Specifications.....186

Print area.....55
Print cartridge.....129, 187
Print counter.....99
Print functions.....69
Print output functions.....70
Print quality functions.....69
Printer Features.....77
Priority Tray.....101

R

Reports.....120
Reset settings.....121
Restore settings.....122

S

SA (Security Association).....178
Smart Organizing Monitor.....125
SMTP settings.....109
SNMP settings.....108
Specifications.....184, 186
Specifying a custom paper size.....41
Specifying the paper type and paper size..40, 42, 43
Status information.....98
Status messages.....139, 143
Supported paper.....45
System.....108
System information.....98, 125
System settings.....100
System Settings.....81

T

TCP/IP status.....104
Toner.....98
Top page.....95
Trademarks.....195
Trap.....108
Tray 1.....28
Tray 2.....100
Tray paper settings.....100
Tray Paper Settings Menu.....84
Troubleshooting.....139
- Error and status messages appear on Smart Organizing Monitor.....143
- Other problems.....155, 156, 159, 162, 168

W

Web Image Monitor..... 94
What you can do with this machine
Printer function.....57
Wi-Fi Setup Wizard..... 86
Wireless LAN settings.....110, 127
Wireless settings..... 110

MEMO

MEMO

MEMO

© 2018