TABLE OF CONTENTS

How to Read the Manuals..... 3

1. Manuals Provided with This Machine

Manuals for This Machine..... 4

2. Safety Information for This Machine

The Meanings of the Safety Symbols Used with This Machine..... 5
The Meanings of Safety Labels..... 6
Safety Precautions to Be Followed..... 6
Safety Labels of This Machine 10

3. Other Information for This Machine

Laws and Regulations..... 18
Legal Requirements..... 18
Trademarks 20

How to Read the Manuals

Symbols Used in the Manuals

This manual uses the following symbols:

Important

Indicates points to pay attention to when using functions. This symbol indicates points that may result in the product or service becoming unusable or result in the loss of data if the instructions are not obeyed. Be sure to read these explanations.

Note

Indicates supplementary explanations of the product's functions and instructions on resolving user errors.

[ ]
Indicates the names of keys or buttons on the product or display.

Region A (mainly Europe and Asia), (mainly Europe), or (mainly Asia)
Region B (mainly North America)
Differences in the functions of Region A and Region B models are indicated by two symbols. Read the information indicated by the symbol that corresponds to the region of the model you are using. For details about which symbol corresponds to the model you are using, see "Model-Specific Information", Specifications.

Disclaimer

To the maximum extent permitted by applicable laws, in no event will the manufacturer be liable for any damages whatsoever arising out of failures of this machine, losses of the registered data, or the use or non-use of this product and operation manuals provided with it.
Make sure that you always copy or have backups of the data registered in this machine. Documents or data might be erased due to your operational errors or malfunctions of the machine.
In no event will the manufacturer be responsible for any documents created by you using this machine or any results from the data executed by you.

Notes

Contents of this manual are subject to change without prior notice.
The manufacturer shall not be responsible for any damage or expense that might result from the use of parts other than genuine parts from the manufacturer with your office products.
For good output quality, the manufacturer recommends that you use genuine toner from the manufacturer.
Some illustrations in this manual might be slightly different from the machine.
Certain options might not be available in some countries. For details, please contact your local dealer.
Depending on which country you are in, certain units may be optional. For details, please contact your local dealer.
.

1. Manuals Provided with This Machine

Manuals for This Machine

The operating instructions of this machine are provided in the following formats:

Format	Manuals
Printed manual	• Safety Information
Web pages	• Safety Information • Operator's Guide (PDF) • Operator's Guide (HTML) • User Guide (HTML) • Basic Operation/Printing Guide (PDF)

Safety Information

Before using the machine, be sure to read the section of this manual entitled Safety Information. It also describes each regulation and environmental conformance.

Operator's Guide

Regarding the basic usage of this machine, frequently used functions, troubleshooting when an error message appears, etc., summaries are provided for each user manual.

User Guide

Describes the setup for using the machine, how to use functions to copy, fax, print, scan or for maintenance and specifications, troubleshooting, various settings, and security functions.

Manuals are available in English, German, French, Italian, Spanish, Dutch, and Russian. The User Guide for languages other than shown above contains the information in Operator's Guide and Security.

Note

- Before you configure the extended security and authentication settings, refer to "Registering Administrators Before Using the Machine" in the Security.
- Using the machine's security function prevents unauthorized use of the machine, data tampering, or information leakage. For enhanced security, we recommend that you first make the following settings:
  - Install the Device Certificate.
  - Enable SSL (Secure Sockets Layer) Encryption.
  - Change the user name and password of the administrator.

2. Safety Information for This Machine

The Meanings of the Safety Symbols Used with This Machine

	Prohibition
	Caution
	Keep out of reach of children
	Do not touch
	Do not throw into the fire
	Do not use the cleaner
	Warning; Laser beam
	Warning; Gear Drive
	Caution, risk of electric shock
	Caution, risk of having hands or arms caught
	Caution, hot surface
	Disconnection, all power plugs

English

The Meanings of Safety Labels

WARNING

Indicates a potentially hazardous situation which, if instructions are not followed, could result in death or serious injury.

CAUTION

Indicates a potentially hazardous situation which, if instructions are not followed, may result in minor or moderate injury or damage to property.

Safety Precautions to Be Followed

Requirements for Unpacking Products

WARNING

- The following explains the warning messages on the plastic bag used in this product's packaging:
  - Do not leave the polythene materials (bags, etc.) supplied with this machine close to babies and small children. Suffocation can result if polythene materials are brought into contact with the mouth or nose.

Requirements for Locating and Installing Machines

WARNING

- Avoid taking the following actions close to or inside this machine because doing so can result in fire or electric shock:
  - Using flammable sprays, solvents, and so on
  - Placing flammable sprays, solvents, and so on
  - Placing containers holding liquids or small metal objects

CAUTION

- Do not place the machine in a humid or dusty environment. Doing so can result in fire or electric shock.
- Do not place the machine on an unstable or tilted surface. Doing so can cause the machine to fall or topple over, possibly resulting in injury.
- Do not obstruct the machine's vents. Doing so can result in fire as the internal components are overheated.
- Do not place heavy objects on the machine. Doing so can cause the machine to fall or topple over, possibly resulting in injury.
- Do not install or use this device in any area that does not have adequate ventilation as shown.

Requirements for Using Power Plugs and Cords

WARNING

- Avoid taking the following actions because doing so can result in fire or electric shock:
  - Using any power supply voltage or frequencies other than those that match the specifications shown
  - Using multi-socket adaptors
  - Using extension cords
  - Touching the prongs of the power cable's plug with anything metallic

- Avoid applying the following actions to power cords because doing so can result in fire or electric shock:
  - Damaging them
  - Bundling them
  - Modifying them
  - Putting heavy objects on them
  - Pulling them forcibly
  - Bending them forcibly

- Do not handle the power cord plug with wet hands. Doing so can result in electric shock.

- The supplied power cord or cords are for use with this machine only. They cannot be used for appliances other than this machine. Also, do not use power cords other than the power cord or cords supplied with this machine. Doing so can result in fire or electric shock.

- To prevent fire or electric shock, disconnect the plug and the power cord from the wall outlet at least once a year and check them. If any of the following conditions exist, do not use the plug and the power cord continuously, and consult your dealer or service representative.
  - There are burn marks on the plug
  - The prongs on the plug are deformed
  - The power cord's inner wires are exposed or broken
  - The power cord's coating is cracked, dented, or damaged
  - When the power cord is bent, the power turns off and on
  - Part of the power cord becomes hot

- When the machine's circuit breaker turns "Off", contact your service representative. Setting it to "On" can result in electric shock, fire, smoke, or tripping of the room's breakers.

CAUTION

- When disconnecting the power cord from the wall outlet, make sure to pull the plug, not the cord. Do not pull the power cord forcibly. Doing so can damage the power cord, possibly resulting in fire or electric shock.

- Be sure to push the power cord plug fully into the wall outlet. Also, do not push it into loose and unstable wall outlets likely to cause a contact failure. Doing so can result in heat generation.

- Be sure to disconnect the plug from the wall outlet and clean the prongs and the area around the prongs at least once a year. Allowing dust to build up on the plug constitutes a fire hazard.

- If you do not use the machine for a long period of time such as consecutive holidays, be sure to disconnect the power cord plug from the wall outlet for reasons of safety.

- When performing maintenance on the machine, disconnect the power cord from the wall outlet for safety.

- Power Source
  208–240 V, 16 A or more, 60 Hz

Please be sure to connect the power cord to a power source as above.

Requirements during Emergencies

WARNING

- Do not touch this machine if a lightning strike occurs in the immediate vicinity. Doing so could result in electric shock.

- Be sure to install the machine as close as possible to a wall outlet so that you can disconnect the power cord plug easily in an emergency.

- If the machine behaves unusually as follows, turn off the power immediately. After turning off the power, make sure to disconnect the power cord plug from the wall outlet, and then contact your service representative and report the problem. Continuously using the power cord can result in fire or electric shock.
  - The machine is emitting smoke
  - The machine is emitting odors
  - Metal objects or other foreign objects have fallen inside the machine
  - Water or other fluids have fallen inside the machine

Requirements for Relocating Machines

CAUTION

- When moving the machine, do not hold the control panel. Doing so may damage the control panel and can result in injury or malfunction.
- When carrying or moving the machine by lifting it for relocation to another floor, contact your service representative. Dropping or toppling the machine can result in injury or malfunction.
- After moving the machine, use the caster fixture to fix it in place. Otherwise, the machine might move or topple over to cause injury.
- When moving the machine, make sure to unplug the power cord from the wall outlet and confirm that line cords and other connecting cables have been removed. Otherwise, the power cord is damaged, possibly resulting in fire or electric shock.

Requirements for Using the Machine

CAUTION

- When pulling out the paper tray, do not pull it out swiftly. The tray may fall and cause injury.
- Do not look into the light source. Doing so may damage your eyes.
- Do not use stapled sheets of paper, aluminum foil, carbon paper, or any kind of conductive paper. Doing so can result in fire.
- Keep USB flash memory devices out of reach of children. If a child accidentally swallows an USB flash memory device, consult a doctor immediately.
- When you open the bypass tray when a banner sheet guide tray is installed, do not put your hands on the front side and the back side of the place indicated by the label of the banner sheet guide tray. Otherwise, your fingers might be caught, resulting in injury.
- Keep your hands clear of the paper output slot of the finisher booklet tray when pulling it out or pushing it in the finisher's staple unit. You may trap your fingers in the machine's gap and injury can result.

CAUTION

- Do not push or pull the attention light when installed to the machine. Doing so may result in damage or malfunction of the attention light or the machine.

Requirements for Handling the Machine's Interior

WARNING

- Do not remove any covers or screws other than those explicitly mentioned in this manual. There are high voltage components inside the machine that can cause electric shock. Also there are laser components inside the machine that can cause blindness. Contact your sales or service representative if any of the machine's internal components require maintenance, adjustment, or repair.
- Do not disassemble or modify this machine. Doing so can result in fire and electric shock. Also, exposure to the laser components inside this machine risks blindness.
- Do not remove any covers or screws other than those explicitly mentioned in this manual. There are high voltage components inside the machine that can cause electric shock. Also there are LED components inside the machine that can cause eye damage. Contact your sales or service representative if any of the machine's internal components require maintenance, adjustment, or repair.
- Do not disassemble or modify this machine. Doing so can result in fire and electric shock. Also, exposure to the LED components inside this machine risks eye damage.

CAUTION

- There are highly-heated parts inside the machine. When removing misfed paper, do not touch areas other than those specified in this manual. Touching those areas can result in burns.
- Although the machine is designed so that a safety device protects users from injury, take care not to touch the rollers during operation. The rollers may pinch before stopping completely.
- Contact your sales or service representative for cleaning the machine's interior. If the machine's interior is not regularly cleaned while dust accumulates, fire and malfunction can result.

CAUTION

- When replacing paper or removing jammed paper, make sure not to trap or injure your fingers.
- Keep your hands clear of the paper output slot of the finisher booklet tray when pulling it out or pushing it in the finisher's staple unit. You may trap your fingers in the machine's gap and injury can result.

Requirements for Handling Supplies

WARNING

- Do not store toner (new or used) or toner containers while toner is inside in a place with an open flame. The toner can ignite and result in burns or fire.
- Do not dispose of the following items into a fire. Toner will ignite on contact with naked flame and burns can result.
  - Toner (new or used)
  - Toner containers while toner is inside
  - Toner-attached parts
- Do not absorb spilled toner (including used toner) using a vacuum cleaner. Absorbed toner may cause ignition or explosion due to electric contact sparks inside the vacuum cleaner. However, you can use a toner-compatible industrial vacuum cleaner. When toner is spilled, remove the spilled toner using a wet cloth so that the toner is not scattered.

CAUTION

- Do not open toner containers forcibly while toner is inside, crush or squeeze them. Toner spillage can cause accidental ingestion or dirtying of clothes, hands, or floor.
- Do not leave the following items in a place where children can reach them:
  - Toner (new or used)
  - Toner containers while toner is inside
  - Toner-attached parts
- When removing jammed paper, replenishing or replacing toner (new or used), make sure not to inhale toner.

CAUTION

- When the following occurs while toner is handled, receive emergency measures first, and then consult a doctor if necessary.
  - When inhaling toner, gargle with a large amount of water and move into a fresh air environment.
  - When swallowing toner, dilute gastric contents with a large amount of water.
  - When getting toner into your eyes, flush them with a large amount of water.
- When removing jammed paper, replenishing or replacing toner (new or used), be careful not to have toner dirt your skin or clothes.
- If toner (new or used) comes into contact with your skin or clothes and smears them, take the following actions:
  - If toner comes into contact with your skin, wash the affected area thoroughly with soap and water.
  - If toner comes into contact with your clothes, wash the stained area with cold water. Heating the stained area by applying hot water will set the toner into the fabric and removing the stain may become impossible.
- When replacing a container with toner (including used toner) or consumables with toner, be careful that the toner does not splatter. After removing used consumables and shutting the lid of the container if the lid is available, put them in a bag.

What you need to follow for power connection

WARNING

- When using a UPS (uninterruptible power supply) for this product, make sure that the output power is not insufficient. If the output power is insufficient, the UPS may smoke or catch fire. Read the UPS instructions and check the rated output power carefully when using it. If you have any questions, contact your Ricoh dealer.
- If you use a surge protector with this product, a part called a varistor inside the surge protector may deteriorate after long-term use, causing the surge protector to malfunction, smoke, or catch fire. Read the surge protector instructions carefully and use it correctly. If you have any questions, contact your Ricoh dealer.

Safety Labels of This Machine

Positions of WARNING and CAUTION labels

This machine has labels for ⚠ WARNING and ⚠ CAUTION at the positions shown below. For safety, please follow the instructions and handle the machine as indicated.

Main Unit

Front side

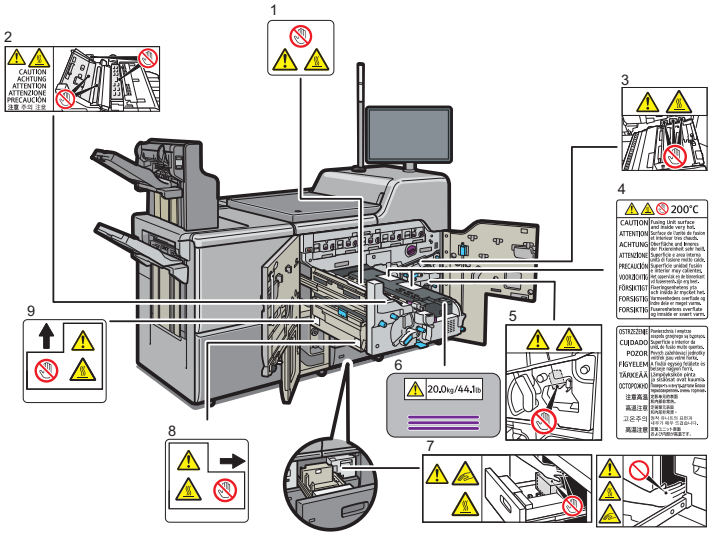

1.
Do not touch the parts which a label is put on. The inside of the machine could be very hot. Caution should be taken when removing misfed paper.

2.
Do not touch the parts a label indicates. The inside of the machine could be very hot. Caution should be taken when removing misfed paper.

3, 5, 8, and 9.
Do not touch the parts a label indicates. The inside of the machine could be very hot. Caution should be taken when removing misfed paper.
(Depending on the release date, this label may be attached according to the modification of official standards.)

4.
Do not touch the parts a label indicates. The inside and surface of the fusing unit could be very hot.
Caution should be taken when removing misfed paper.

6.
This label indicates the weight of the unit. However, this label is meant for customer engineers and operators who have received training. Do not lift a unit that has this label.

7.
Keep your hands clear of the parts these labels indicate. Otherwise, you might trap your fingers and an injury might occur.

Right side

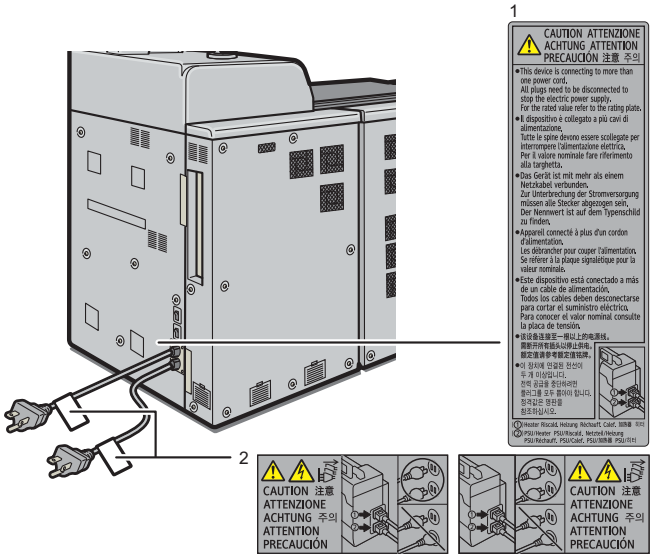

DWR055

1.
This device is connecting to more than one power cord. All plugs need to disconnected to stop the electric power supply. For the rated value refer to the rating plate.

2.
This machine uses two power cords. To stop the power supply of the machine completely, remove all power plugs. Unless all power plugs are removed, fire or electric shock may result.

Waste toner bottle

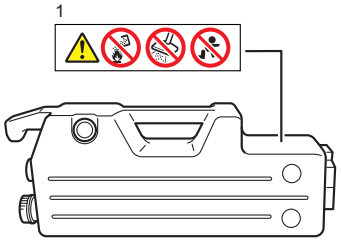

DWR005

1.
Do not incinerate waste toner bottles. Doing so risks burns as toner will ignite on contact with naked flame.
Do not use a vacuum cleaner to remove spilled waste toner. Absorbed toner may cause a fire or explosion due to electrical contact sparking inside the vacuum cleaner.
Store waste toner bottles out of reach of children. If a child accidentally swallows toner, consult a doctor immediately.

Two-tray Wide LCT

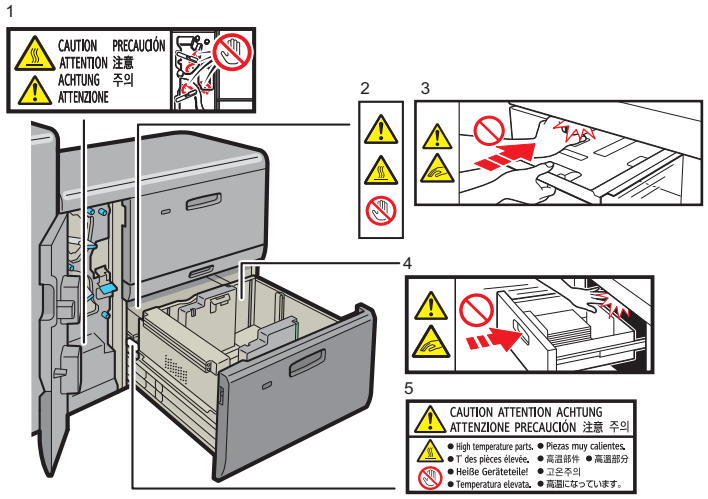

1, 2 and 5.
High temperature parts. Do not touch the parts which a label is put on. Otherwise, an injury might occur.

3 and 4. (This label is attached to both trays.)
Keep your hands clear of the parts a label indicates. Otherwise, you might trap your fingers and an injury might occur.

Banner sheet tray of two-tray wide LCT

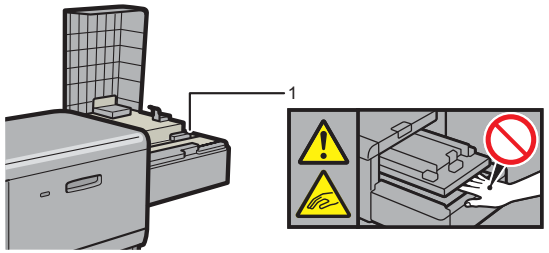

1.
Do not put your hand beneath the bottom board. Your hand or finger might get caught between the machine parts, and an injury may result.

Multi bypass tray

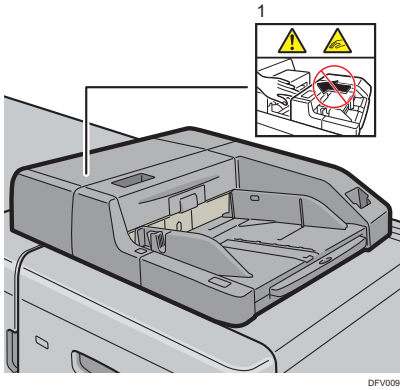

1.
Keep your hands clear of the multi bypass tray when removing paper jam. You might trap your fingers if you do not.

Interposer CI5040

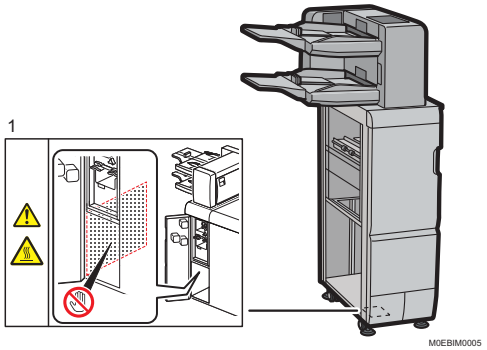

1.
High temperature parts. Do not touch the parts which a label is put on. Otherwise, an injury might occur.

Finisher SR5110

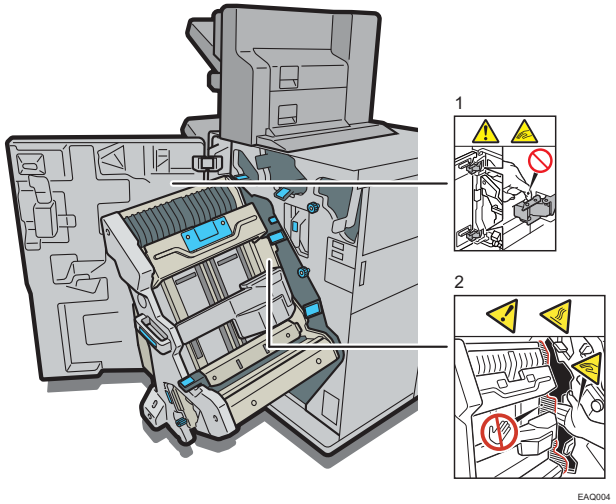

1.
When opening and closing the front cover, keep your hands clear of the hinges. The hinges are a hazard. You risk trapping your fingers if you do not keep your hands clear of them.

2.
The inside could be very hot. Keep your hands clear of the parts a label indicates. You might trap your fingers and an injury might occur.

Booklet Finisher SR5120

Right side

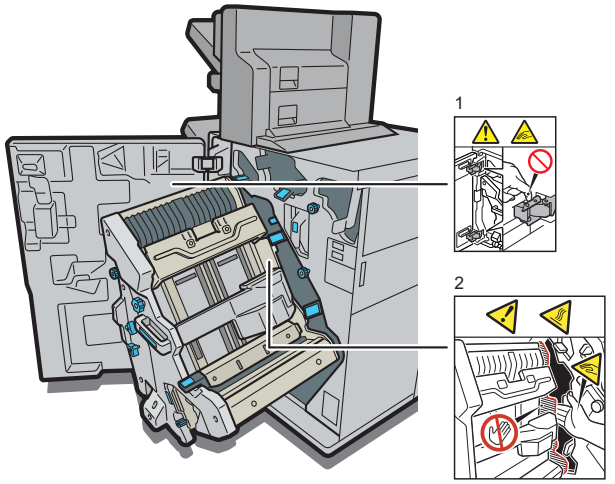

EAQ003

1.
When opening and closing the front cover, keep your hands clear of the hinges. The hinges are a hazard. You risk trapping your fingers if you do not keep your hands clear of them.

2.
The inside could be very hot. Keep your hands clear of the parts a label indicates. You might trap your fingers and an injury might occur.

Left side

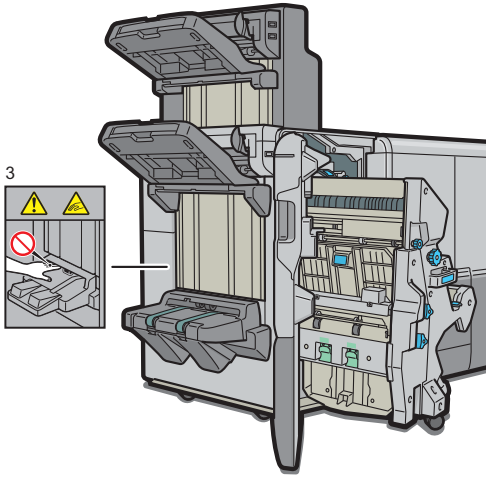

EAQ005

3.
Keep your hands clear of the booklet finisher tray when pulling out or pushing in the finisher's staple unit, or removing paper jam. You might trap your fingers if you do not. Take care not to touch the booklet finisher tray during operation. Otherwise, an injury might occur.

Multi-Folding Unit FD5030

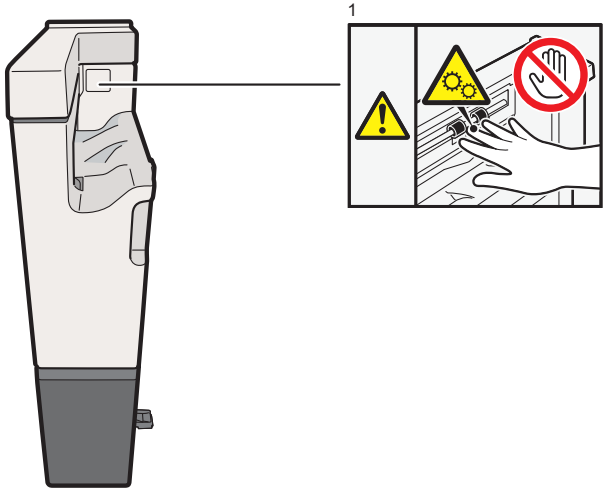

1.
Keep your hands clear of the drive parts a label indicates. Otherwise, you might trap your fingers and an injury might occur.

Trimmer Unit

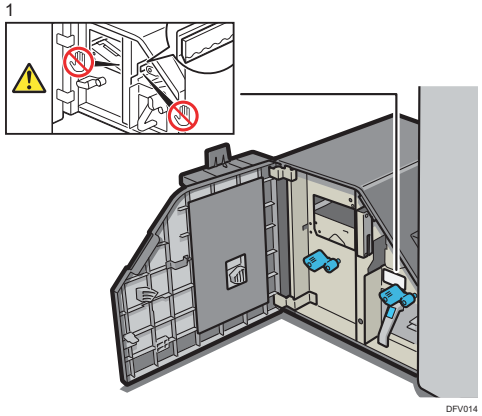

1.
Keep your hands clear of the internal cutting blade when you are removing jammed paper. Not doing so risks injury to your fingers from the cutting blade.

English

Buffer Pass Unit

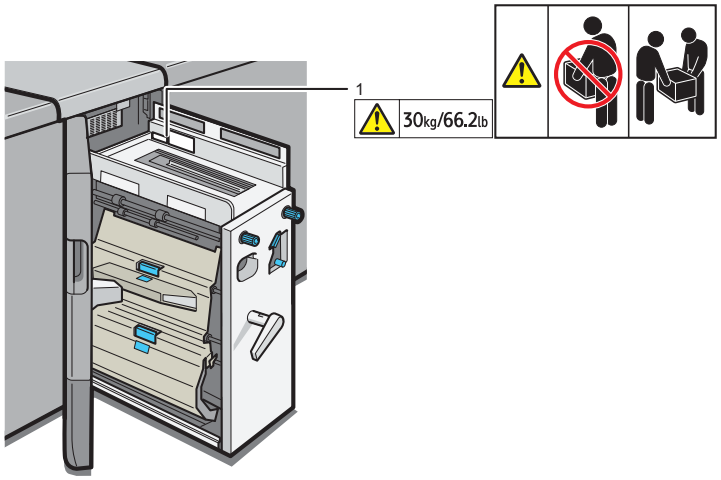

DFV004

1.
These labels indicate the weight of the unit and describe how to lift the unit. However, these labels are meant for customer engineers. Do not lift a unit that has these labels.

Perfect Binder

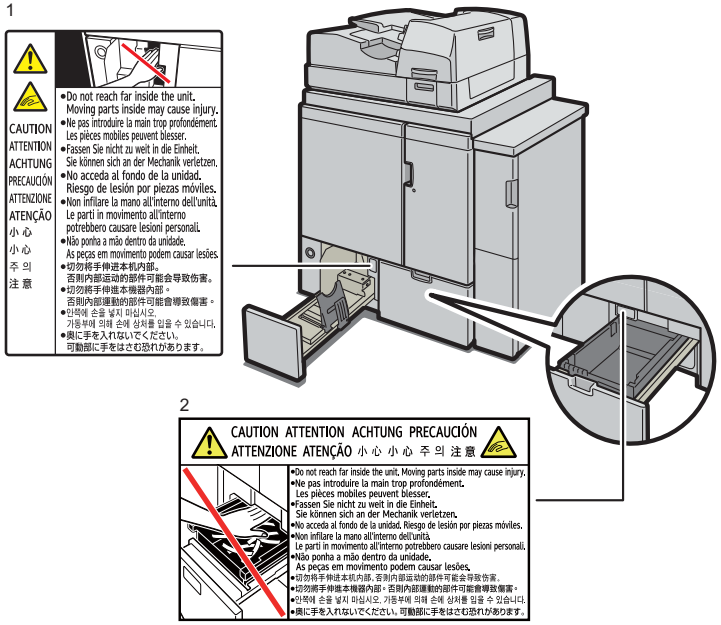

M0EBIM0007

1.
When removing bound booklets, keep your hands clear of the perfect binder's lower left tray. You might trap your fingers if you do not.

2.
Do not reach far inside the unit. Moving parts inside may cause injury.

High Capacity Stacker

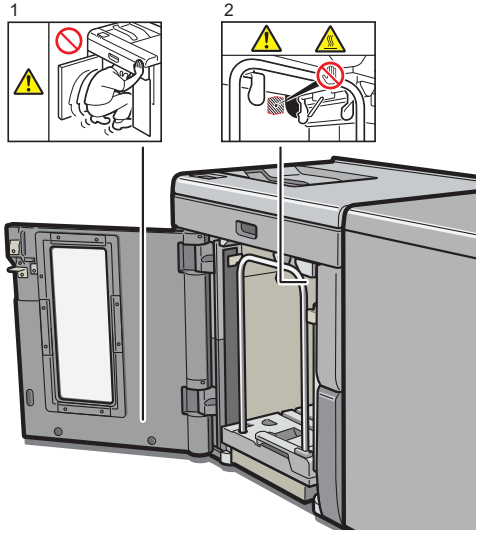

DFV005

1.
Do not attempt to get inside the high capacity stacker. Otherwise, an injury might occur.

2.
Do not touch the parts a label indicates. The inside of the high capacity stacker could be very hot.
Caution should be taken when removing misfed paper.

Symbols for the Power Switch

The meanings of the symbols for the switches on this machine are as follows:
❙ : POWER ON
⏻ : STANDBY

3. Other Information for This Machine

Laws and Regulations

Duplication and Printing Prohibited

Do not copy or print any item for which reproduction is prohibited by law.
Copying or printing the following items is generally prohibited by local law:
bank notes, revenue stamps, bonds, stock certificates, bank drafts, checks, passports, driver's licenses.
The preceding list is meant as a guide only and is not inclusive. We assume no responsibility for its completeness or accuracy. If you have any questions concerning the legality of copying or printing certain items, consult with your legal advisor.

Legal Requirements

Laser Safety

For Pro C7500

CDRH Regulations

This equipment complies with requirements of 21 CFR Subchapter J for class I laser product. This equipment contains five VCSELs (Vertical Cavity Surface Emitting Laser), 772–792 nanometer wavelength for each emitter. The beam divergence angle is 5.5 degrees (minimum) and 7.9 degrees (maximum) in the vertical direction, and 5.5 degrees (minimum) and 7.9 degrees (maximum) in the horizontal direction, and laser beams are generated in Continuous Wave (CW) mode. Each VCSEL has forty light sources and the maximum output power of each light source is 1.23 milliwatt.

Caution

Use of controls or adjustments or performance of procedures other than those specified in this manual might result in hazardous radiation exposure.

For Media Identification Unit Type S3

CDRH Regulations

Media Identification Unit (optional) complies with the requirements of IEC60825-1:2014 (EN60825-1:2014) for class 1 laser product. Media Identification Unit contains one VCSEL (Vertical Cavity Surface Emitting Laser), 772–792 nanometer wavelength. The beam divergence angle is 5.3 degrees (minimum) and 7.9 degrees (maximum) in the vertical direction, and 5.3 degrees (minimum) and 7.9 degrees (maximum) in the horizontal direction, and laser beams are generated in Continuous Wave (CW) mode. The VCSEL has twelve light sources and the maximum total output power is 2.5 milliwatt.

Caution

Use of controls or adjustments or performance of procedures other than those specified in this manual might result in hazardous radiation exposure.

Notes to USA Users of FCC Requirements

Part 15 of the FCC Rules.

Note

This equipment has been tested and found to comply with the limits for a Class A digital device, pursuant to Part 15 of the FCC Rules. These limits are designed to provide reasonable protection against harmful interference when the equipment is operated in a commercial environment. This equipment generates, uses and can radiate radio frequency energy and, if not installed and used in accordance with the instruction manual, may cause harmful interference to radio communications. Operation of this equipment in a residential area is likely to cause harmful interference in which case the user will be required to correct the interference at his own expense.

Caution

Changes or modifications not expressly approved by the party responsible for compliance could void the user's authority to operate the equipment.
This transmitter must not be co-located or operated in conjunction with any other antenna or transmitter.
This equipment complies with FCC radiation exposure limits set forth for an uncontrolled environment and meets the FCC radio frequency (RF) Exposure Guidelines. This equipment should be installed and operated keeping the radiator at least 20cm or more away from person's body (excluding extremities: hands, wrists, feet and ankles).

Supplier's Declaration of Conformity

This device complies with part 15 of the FCC Rules.
Operation is subject to the following two conditions:
(1) This device may not cause harmful interference, and
(2) This device must accept any interference received, including interference that may cause undesired operation.
Responsible party: Ricoh USA, Inc.
Address: 300 Eagleview Boulevard, Suite 200 Exton, PA 19341, U.S.A.
Telephone number: 610-296-8000
Product Name: Printer
Model Number: Pro C7500

Using the Shield Cable

Properly shielded and grounded cables and connectors must be used for connections to a host computer (and/or peripheral) in order to meet FCC emission limits.

Notes to Canadian Users of Wireless Devices

This device contains licence-exempt transmitter(s)/receiver(s) that comply with Innovation, Science and Economic Development Canada's licence-exempt RSS(s). Operation is subject to the following two conditions:
1. This device may not cause interference.
2. This device must accept any interference, including interference that may cause undesired operation of the device.

This equipment complies with ISED radiation exposure limits set forth for an uncontrolled environment and meets RSS-102 of the ISED radio frequency (RF) Exposure rules as this equipment has very low levels of RF energy.

Remarques à l'attention des utilisateurs canadiens d'appareils sans fil

L'émetteur/récepteur exempt de licence contenu dans le présent appareil est conforme aux CNR d'Innovation, Sciences et Développement économique Canada applicables aux appareils radio exempts de licence. L'exploitation est autorisée aux deux conditions suivantes :
1. L'appareil ne doit pas produire de brouillage;
2. L'appareil doit accepter tout brouillage radioélectrique subi, même si le brouillage est susceptible d'en compromettre le fonctionnement.

Cet équipement est conforme aux limites d'exposition aux rayonnements énoncées pour un environnement non contrôlé et respecte les règles d'exposition aux fréquences radioélectriques (RF) CNR-102 de l'ISDE puisque cet appareil a une niveau tres bas d'energie RF.

Trademarks

Other product names used herein are for identification purposes only and might be trademarks of their respective companies. We disclaim any and all rights to those marks.