Testing Laboratory
3023

Test Report No:
2640204R-RFUSV01S-A

TEST REPORT
FCC Rules & Regulations

Product Name	Bluetooth Headset
Brand Name	Jabra
Model No.	HSC260W
FCC ID	BCE-HSC260W
Applicant´s Name / Address	GN Audio USA Inc. 900 Chelmsfort St, Tower 2, Floor 8 , Lowell, Massachusetts, 1851 United States
Manufacturer's Name	GN Hearing A/S
Test Method Requested, Standard	FCC CFR Title 47 Part 15 Subpart C Section 15.247
Verdict Summary	IN COMPLIANCE
Documented by Jinn Chen	Jinn Chen
Approved by Alan Chen	Alan Chen
Date of Receipt	2026/04/08
Date of Issue	2026/04/30
Report Version	V1.0

INDEX

page

Competences and Guarantees 4
General Conditions 4
Revision History 5
Summary of Test Result 6
1. General Information 7
1.1. EUT Description 7
1.2. EUT Information 8
1.3. Testing Location Information 8
1.4. Measurement Uncertainty 9
1.5. List of Test Equipment 10
2. Test Configuration of EUT 11
2.1. Test Condition 11
2.2. Test Frequency Mode 11
2.3. Duty Cycle 12
2.4. Measurement Configuration 13
2.5. Tested System Details 14
2.6. Configuration of Tested System 14
2.7. EUT Operating Procedures 14
3. AC Power Line Conducted Emission 15
3.1. Test Setup 15
3.2. Test Limit 15
3.3. Test Procedure 15
3.4. Test Result of AC Power Line Conducted Emission 15
4. 20dB Bandwidth 16
4.1. Test Setup 16
4.2. Test Limit 16
4.3. Test Procedures 16
4.4. Test Result of 20dB Bandwidth 16
5. Carrier Frequency Separation 17
5.1. Test Setup 17
5.2. Test Limit 17
5.3. Test Procedures 17
5.4. Test Result of Carrier Frequency Separation 17
6. Maximum Peak Conducted Output Power 18
6.1. Test Setup 18
6.2. Test Limit 18

6.3. Test Procedures 18
6.4. Test Result of Maximum Peak Conducted Output Power 18
7. Number of Hopping Frequency 19
7.1. Test Setup 19
7.2. Test Limit 19
7.3. Test Procedure 19
7.4. Test Result of Number of Hopping Frequency 19
8. Dwell Time 20
8.1. Test Setup 20
8.2. Test Limit 20
8.3. Test Procedure 20
8.4. Test Result of Dwell Time 20
9. Antenna Port Conducted Emission 21
9.1. Test Setup 21
9.2. Test Limit 21
9.3. Test Procedure 21
9.4. Test Result of Antenna Port Conducted Emission 21
10. Radiated Emission 22
10.1. Test Setup 22
10.2. Test Limit 23
10.3. Test Procedure 23
10.4. Test Result of Radiated Emission 23
Appendix A. Test Result of AC Power Line Conducted Emission
Appendix B. Test Result of 20dB Bandwidth
Appendix C. Test Result of Carrier Frequency Separation
Appendix D. Test Result of Maximum Peak Conducted Output Power
Appendix E. Test Result of Number of Hopping Frequency
Appendix F. Test Result of Dwell Time
Appendix G. Test Result of Antenna Port Conducted Emission
Appendix H. Test Result of Radiated Emission
Appendix I. Test Setup Photograph

Competences and Guarantees

DEKRA is a testing laboratory competent to carry out the tests described in this report.
In order to assure the traceability to other national and international laboratories, DEKRA has a calibration and maintenance program for its measurement equipment.

DEKRA guarantees the reliability of the data presented in this report, which is the result of the measurements and the tests performed to the item under test on the date and under the conditions stated in the report and it is based on the knowledge and technical facilities available at DEKRA at the time of performance of the test.

DEKRA is liable to the client for the maintenance of the confidentiality of all information related to the item under test and the results of the test.

The results presented in this Test Report apply only to the particular item under test established in this document.

IMPORTANT: No parts of this report may be reproduced or quoted out of context, in any form or by any means, except in full, without the previous written permission of DEKRA.

General Conditions

1. The test results relate only to the samples tested.
2. The test results shown in the test report are traceable to the national/international standard through the calibration report of the equipment and evaluated measurement uncertainty herein.
3. This report must not be used to claim product endorsement by TAF or any agency of the government.
4. The test report shall not be reproduced without the written approval of DEKRA Testing and Certification Co., Ltd.
5. Measurement uncertainties evaluated for each testing system and associated connections are given here to provide the system information for reference. Compliance determinations do not take into account measurement uncertainties for each testing system, but are based on the results of the compliance measurement.

Revision History

Version	Description	Issued Date
V1.0	Initial issue of report	2026/04/30

Summary of Test Result

Report Clause	Test Items	Result (PASS/FAIL)	Remark
3	AC Power Line Conducted Emission	PASS	-
4	20dB Bandwidth	PASS	-
5	Carrier Frequency Separation	PASS	-
6	Maximum Peak Conducted Output Power	PASS	-
7	Number of Hopping Frequency	PASS	-
8	Dwell Time	PASS	-
9	Antenna Port Conducted Emission	PASS	-
10	Radiated Emission	PASS	-

Comments and Explanations
The declared of product specification for EUT presented in the report are provided by the manufacturer, and the manufacturer takes all the responsibilities for the accuracy of product specification.

1. General Information

1.1. EUT Description

Frequency Range	2400 ~ 2483.5 MHz
Operating Frequency / Channel Number	2402 ~ 2480 MHz / 79 Channels
Mode	Bluetooth BR / EDR
Type of Modulation	Bluetooth BR uses a GFSK (1 Mbps)
	Bluetooth EDR uses a combination of π/4 DQPSK (2 Mbps) and 8DPSK (3 Mbps)

Accessories Information		
No.	Equipment Name	Description
1	Bluetooth USB Dongle	FCC ID：BCE-END085W
2	Bluetooth USB Dongle	FCC ID：BCE-END080W
3	Wireless Charging Pad (Optional)	FCC ID：BCE-WH-WI-022
4	Type C to Type C Cable	shielded, 1.2m

Antenna Information				
Item.	Brand Name	Part No.	Type	Gain (dBi)
1	Jabra	07-11684	Stamping	3.29

Note: The antenna of EUT conforms to FCC 15.203.

1.2. EUT Information

EUT Power Type	From USB / Battery

1.3. Testing Location Information

USA	FCC Designation Number: TW0033 / FCC Registration Number: 647365
Canada	CAB Identifier Number: TW3023 / Company Number: 26930

Site Description	Accredited by TAF
	Accredited Number: 3023

Test Laboratory	DEKRA Testing and Certification Co., Ltd.
	Linkou Laboratory
Address	No. 85, Wenlin St., Linkou Dist., New Taipei City 244017, Taiwan, R.O.C.
Performed Location	No. 26, Huaya 1st Rd., Guishan Dist.,Taoyuan City 333411, Taiwan, R.O.C.
Phone Number	+886-3-275-7255
Fax Number	+886-3-327-8031

Ambient conditions in the laboratory:

Performed Item	Items	Required	Actual	Test Date	Tested By
AC Power Line Conducted Emission	Temperature (°C)	10~40 °C	23.2 °C	2026/04/27	Neko Chen
	Humidity (%RH)	10~90 %	57.5 %		
RF Conducted Emission	Temperature (°C)	10~40 °C	21.3~25.2 °C	2026/04/08 ~ 2026/04/14	Neko Chen
	Humidity (%RH)	10~90 %	54.2~62.6 %		
Radiated Emission	Temperature (°C)	10~40 °C	24.2~24.5 °C	2026/04/23 ~ 2026/04/24	Rock Liang
	Humidity (%RH)	10~90 %	67.8~71.3%		

1.4. Measurement Uncertainty

Uncertainties have been calculated according to the DEKRA internal document.

The reported expanded uncertainties are based on a standard uncertainty multiplied by a coverage factor of k=2, providing a level of confidence of approximately 95%.

Measurement uncertainties evaluated for each testing system and associated connections are given here to provide the system information for reference. Compliance determinations do not take into account measurement uncertainties for each testing system, but are based on the results of the compliance measurement.

Test item	Uncertainty
AC Power Line Conducted Emission	±3.50 dB
20dB Bandwidth	±1580.61 Hz
Carrier Frequency Separation	±1580.61 Hz
Maximum Peak Conducted Output Power	Spectrum Analyzer: ±2.13 dB Power Meter: ±1.05 dB
Number of Hopping Frequency	N/A
Dwell Time	±0.62 %
Antenna Port Conducted Emission	±2.13 dB
Radiated Emission	9 kHz~30 MHz: ±3.30 dB 30 MHz~1 GHz: ±5.19 dB 1 GHz~18 GHz: ±4.46 dB 18 GHz~40 GHz: ±4.19 dB
Duty Cycle	±0.62 %

1.5. List of Test Equipment

For Conduction Measurements / HY-SR01

	Equipment	Manufacturer	Model No.	Serial No.	Cal. Date	Due Date
V	EMI Test Receiver	R&S	ESR7	101601	2026/04/20	2027/04/19
V	Two-Line V-Network	R&S	ENV216	101306	2026/03/27	2028/03/26
V	Two-Line V-Network	R&S	ENV216	101307	2025/08/06	2027/08/05
V	Coaxial Cable	SUHNER	RG400_BNC	RF001	2026/01/10	2027/01/09

Note:
1. Two-Line V-Network is calibrated every two years, the other equipment is calibrated every year.
2. The test instruments marked with “V” are used to measure the final test results.
3. Test Software Version: e3 230303 dekra V9.

For Conducted Measurements / HY-SR02

	Equipment	Manufacturer	Model No.	Serial No.	Cal. Date	Due Date
V	Spectrum Analyzer	R&S	FSV30	103467	2025/05/29	2026/05/28
V	Spectrum Analyzer	KEYSIGHT	N9010A	MY54510317	2025/08/04	2026/08/03
V	Peak Power Analyzer	KEYSIGHT	8990B	MY51000539	2025/05/05	2026/05/04
V	Wideband Power Sensor	KEYSIGHT	N1923A	MY59240002	2025/05/07	2026/05/06
V	Wideband Power Sensor	KEYSIGHT	N1923A	MY59240003	2025/05/07	2026/05/06

Note:
1. All equipment is calibrated every year.
2. The test instruments marked with “V” are used to measure the final test results.
3. Test Software Version : DTC_RF_Tool_Release V2.0.37.

For Radiated Measurements /HY-CB03

	Equipment	Manufacturer	Model No.	Serial No.	Cal. Date	Due. Date
V	Loop Antenna	TESEQ	HLA6121	49611	2025/02/18	2026/02/17
V	Bi-Log Antenna	SCHWARZBECK	VULB9168	9168-0675	2025/08/14	2027/08/13
V	Horn Antenna	RF SPIN	DRH18-E	210508A18ES	2024/05/30	2026/05/29
V	Horn Antenna	Com-Power	AH-840	101100	2025/10/07	2027/10/06
V	Pre-Amplifier	SGH	SGH0301-9	20211007-11	2026/01/10	2027/01/09
V	Pre-Amplifier	SGH	PRAMP118	20200701	2026/01/10	2027/01/09
V	Pre-Amplifier	EMCI	EMC05820SE	980310	2026/01/10	2027/01/09
V	Pre-Amplifier	EMCI	EMC184045SE	980369	2026/01/10	2027/01/09
V	Coaxial Cable	EMCI	EMC102-KM-KM-600	160311	2026/01/10	2027/01/09
V	Coaxial Cable	SGH	HC360-2.92M/2.92M-7.0M	202108-1	2026/01/10	2027/01/09
V	Filter	MICRO TRONICS	BRM20887	G002	2026/01/05	2027/01/04
	Filter	MICRO TRONICS	BRM50716	G067	2026/01/05	2027/01/04
V	EMI Test Receiver	R&S	ESR3	102793	2025/12/01	2026/11/30
V	Spectrum Analyzer	R&S	FSV3044	101113	2025/12/23	2026/12/22
V	Coaxial Cable	SGH	SGH18	2021005-1	2026/01/10	2027/01/09
V	Coaxial Cable	SGH	SGH18	202108-4	2026/01/10	2027/01/09
V	Coaxial Cable	SGH	HA800	GD20110223-1	2026/01/10	2027/01/09
V	Coaxial Cable	SGH	HA800	GD20110222-8	2026/01/10	2027/01/09

Note:
1. Bi-Log Antenna and Horn Antenna are calibrated every two years, the other equipment is calibrated every year.
2. The test instruments marked with “V” are used to measure the final test results.
3. Test Software Version: e3 230303 dekra V9.

2. Test Configuration of EUT

2.1. Test Condition

EUT Operational Condition	
Testing Voltage	DC 5V by USB

2.2. Test Frequency Mode

Test Software Version	AB1595_Lab Test Tool / Version 5.9.0.3

Modulation	Frequency (MHz)	Power Setting
GFSK	2402	58
	2441	58
	2480	58
8DPSK	2402	57
	2441	57
	2480	57

2.3. Duty Cycle

Modulation	Time on of 100 ms (ms)	Duty Cycle (Ton/100 ms)	Duty Cycle Correction factor (dB)
GFSK	2.900	0.02900	-30.752
8DPSK	2.900	0.02900	-30.752

Note: Duty Cycle correction factor = 20 LOG(Duty Cycle).

GFSK

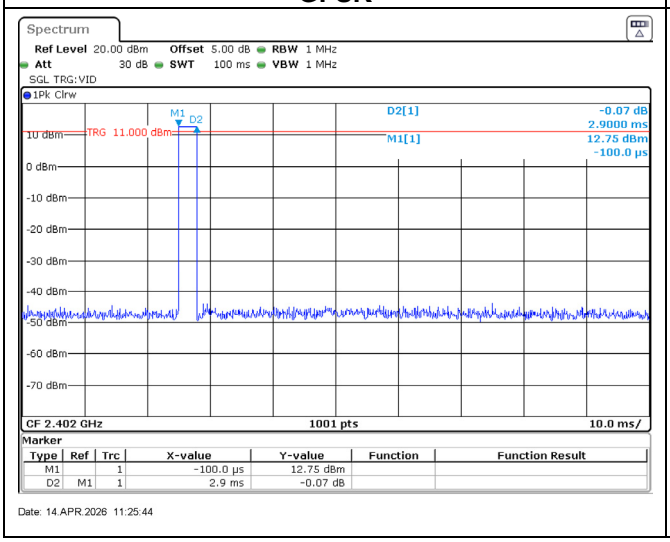

8DPSK

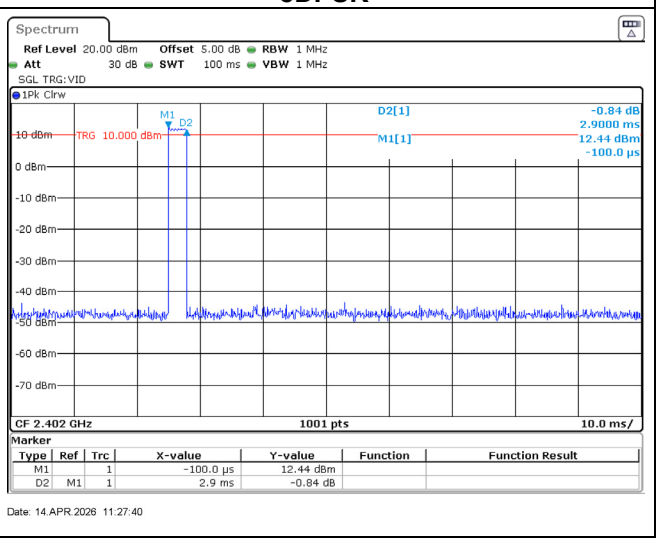

2.4. Measurement Configuration

Test Mode	Mode 1 (Transmit)	GFSK
		8DPSK

Note:

1. Determining compliance shall be based on the results of the compliance measurement, without taking measurement instrumentation uncertainty into account.
2. For radiated emissions below 1 GHz and AC power line conducted emissions, all modes of operation were investigated, and the worst-case emissions are reported.
3. The test mode is based on Bluetooth technology. While testing 1 Mbps, 2 Mbps, and 3 Mbps, the worst cases are 1 Mbps and 3 Mbps. Only the worst-case data is recorded in this report.
4. The radiation measurements are performed in the X, Y, and Z axis positions. Only the worst case is shown in the report.

2.5. Tested System Details

No.	Equipment	Brand Name	Model No.	Serial No.	Power Cord
1	Notebook PC	DELL	Latitude 5491	1PL56S2	N/A

2.6. Configuration of Tested System

Connection Diagram

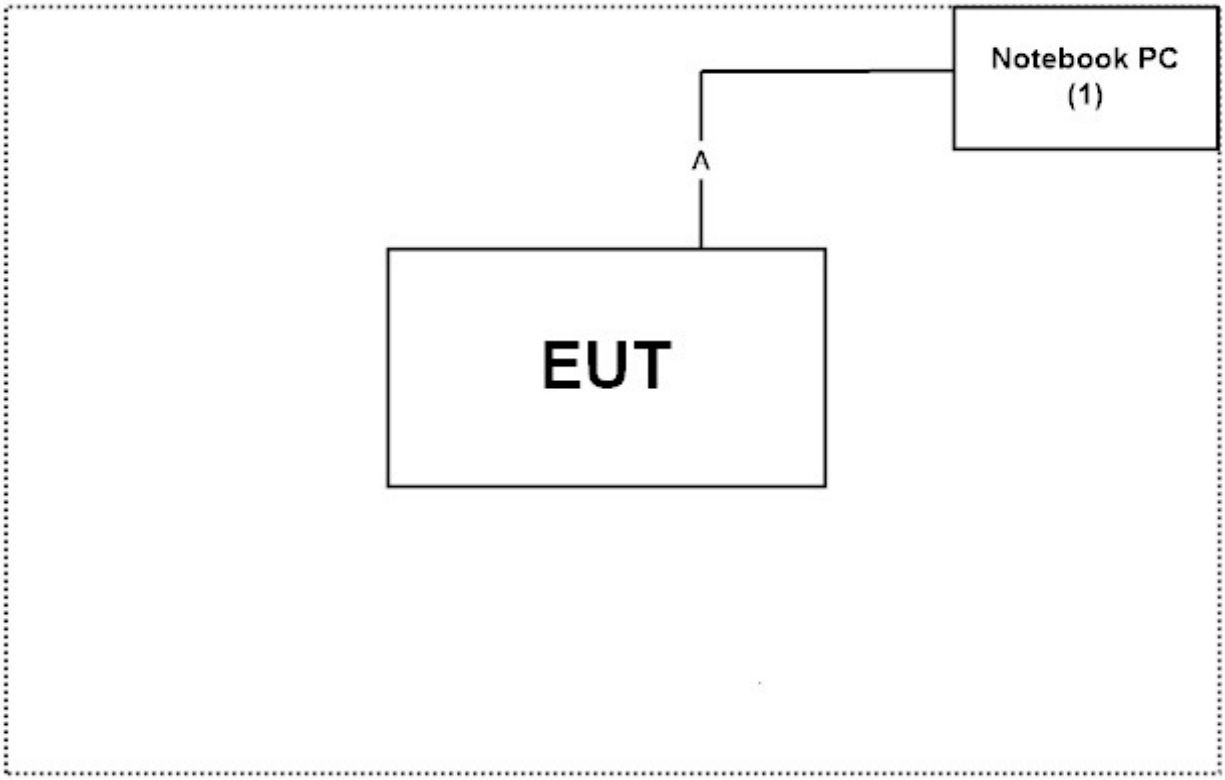

Signal Cable Type		Signal cable Description
A	USB-C TO USB-C Cable	Shielded, 1.2m

2.7. EUT Operating Procedures

1	Setup the EUT as shown in Section 2.6.
2	Execute software “AB1595_Lab Test Tool / Version 5.9.0.3” on the Notebook PC.
3	Configure the test mode, the test channel, and the data rate.
4	Verify that the EUT works properly.

3. AC Power Line Conducted Emission

3.1. Test Setup

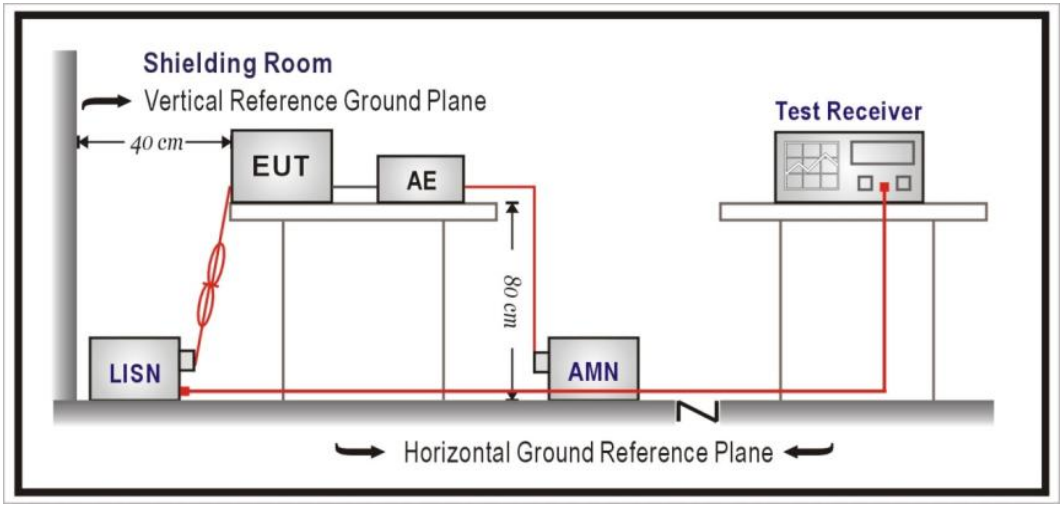

3.2. Test Limit

Frequency (MHz)	QP (dBμV)	AV (dBμV)
0.15 - 0.50	66 - 56	56 - 46
0.50 - 5.0	56	46
5.0 - 30	60	50

Remarks: In the above table, the tighter limit applies at the band edges.

3.3. Test Procedure

The EUT was setup according to ANSI C63.10-2020 for AC Power Line Conducted Emissions.

3.4. Test Result of AC Power Line Conducted Emission

Refer as Appendix A

4. 20dB Bandwidth

4.1. Test Setup

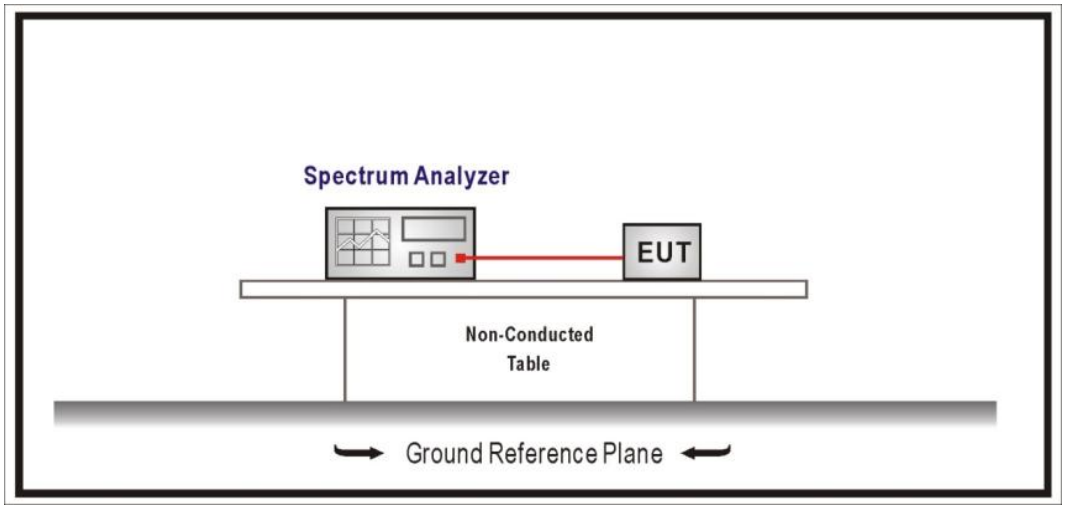

4.2. Test Limit

N/A

4.3. Test Procedures

The EUT was setup according to ANSI C63.10-2020 and tested according to FHSS test procedure of KDB 558074.

4.4. Test Result of 20dB Bandwidth

Refer as Appendix B

5. Carrier Frequency Separation

5.1. Test Setup

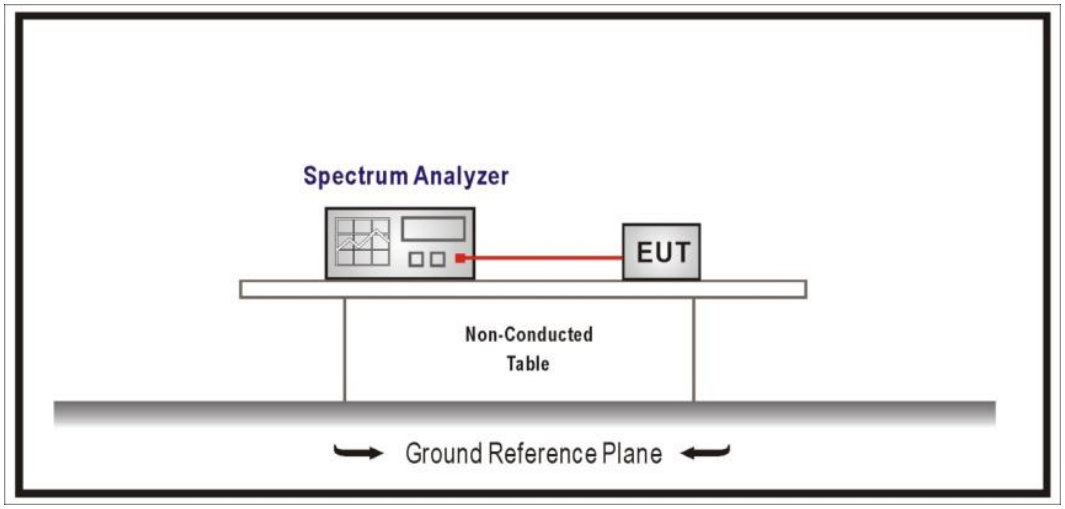

5.2. Test Limit

Frequency hopping systems shall have hopping channel carrier frequencies separated by a minimum of 25 kHz or the 20 dB bandwidth of the hopping channel, whichever is greater. Alternatively, frequency hopping systems operating in the 2400 ~ 2483.5 MHz band may have hopping channel carrier frequencies that are separated by 25 kHz or two-thirds of the 20 dB bandwidth of the hopping channel, whichever is greater, provided the systems operate with a Maximum Conducted Output Power no greater than 125 mW. The system shall hop to channel frequencies that are selected at the system hopping rate from a pseudo randomly ordered list of hopping frequencies. Each frequency must be used equally on the average by each transmitter. The system receivers shall have input bandwidths that match the hopping channel bandwidths of their corresponding transmitters and shall shift frequencies in synchronization with the transmitted signals.

5.3. Test Procedures

The EUT was setup according to ANSI C63.10-2020 and tested according to FHSS test procedure of KDB 558074.

5.4. Test Result of Carrier Frequency Separation

Refer as Appendix C

6. Maximum Peak Conducted Output Power

6.1. Test Setup

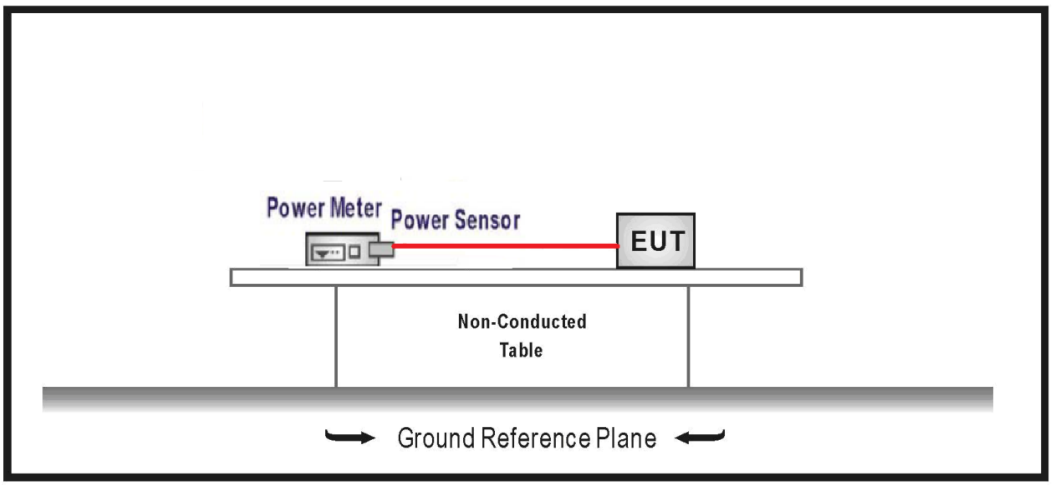

6.2. Test Limit

For frequency hopping systems operating in the 902 ~ 928 MHz band:

1. Number of Hopping Frequencies ≥50: 1 watt (30dBm)
2. 50 > Number of Hopping Frequencies ≥25: 0.25 watt (23.98dBm)

For frequency hopping systems operating in the 2400 ~ 2483.5 MHz band:

1. Number of Hopping Frequencies ≥75: 1 watt (30dBm)
2. Number of Hopping Frequencies ≥15: 0.125 watts (20.97dBm)

For frequency hopping systems operating in the 5725 ~ 5850 MHz band:
Number of Hopping Frequencies ≥75: 1 watt (30dBm)

6.3. Test Procedures

The EUT was setup according to ANSI C63.10-2020 and tested according to FHSS test procedure of KDB 558074.

6.4. Test Result of Maximum Peak Conducted Output Power

Refer as Appendix D

7. Number of Hopping Frequency

7.1. Test Setup

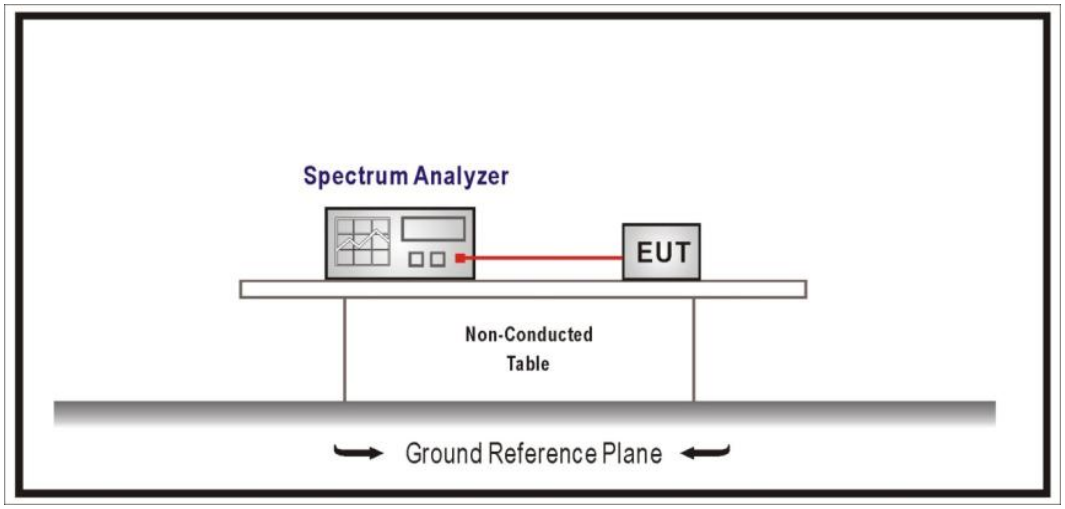

7.2. Test Limit

For frequency hopping systems operating in the 902 ~ 928 MHz band: if the 20 dB bandwidth of the hopping channel is less than 250 kHz, the system shall use at least 50 hopping frequencies and the average time of occupancy on any frequency shall not be greater than 0.4 seconds within a 20 second period; if the 20 dB bandwidth of the hopping channel is 250 kHz or greater, the system shall use at least 25 hopping frequencies and the average time of occupancy on any frequency shall not be greater than 0.4 seconds within a 10 second period. The maximum allowed 20 dB bandwidth of the hopping channel is 500 kHz.

Frequency hopping systems in the 2400 ~ 2483.5 MHz band shall use at least 15 channels. The average time of occupancy on any channel shall not be greater than 0.4 seconds within a period of 0.4 seconds multiplied by the number of hopping channels employed. Frequency hopping systems may avoid or suppress transmissions on a particular hopping frequency provided that a minimum of 15 channels are used.

Frequency hopping systems operating in the 5725 ~ 5850 MHz band shall use at least 75 hopping frequencies. The maximum 20 dB bandwidth of the hopping channel is 1 MHz. The average time of occupancy on any frequency shall not be greater than 0.4 seconds within a 30 second period.

7.3. Test Procedure

The EUT was setup according to ANSI C63.10-2020 and tested according to FHSS test procedure of KDB 558074.

7.4. Test Result of Number of Hopping Frequency

Refer as Appendix E

8. Dwell Time

8.1. Test Setup

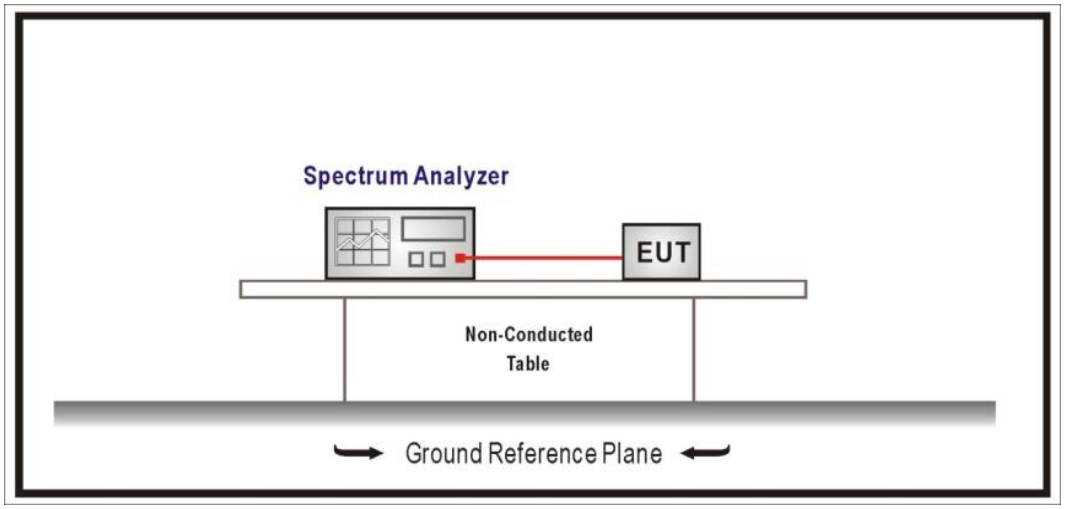

8.2. Test Limit

For frequency hopping systems operating in the 902-928 MHz band: if the 20 dB bandwidth of the hopping channel is less than 250 kHz, the system shall use at least 50 hopping frequencies and the average time of occupancy on any frequency shall not be greater than 0.4 seconds within a 20 second period; if the 20 dB bandwidth of the hopping channel is 250 kHz or greater, the system shall use at least 25 hopping frequencies and the average time of occupancy on any frequency shall not be greater than 0.4 seconds within a 10 second period.

For frequency hopping systems operating in the 2400-2483.5 MHz bands. The average time of occupancy on any channel shall not be greater than 0.4 seconds within a period of 0.4 seconds multiplied by the number of hopping channels employed.

For frequency hopping systems operating in the 5725-5850 MHz bands. The average time of occupancy on any frequency shall not be greater than 0.4 seconds within a 30 second period.

8.3. Test Procedure

The EUT was setup according to ANSI C63.10-2020 and tested according to FHSS test procedure of KDB 558074.

8.4. Test Result of Dwell Time

Refer as Appendix F

9. Antenna Port Conducted Emission

9.1. Test Setup

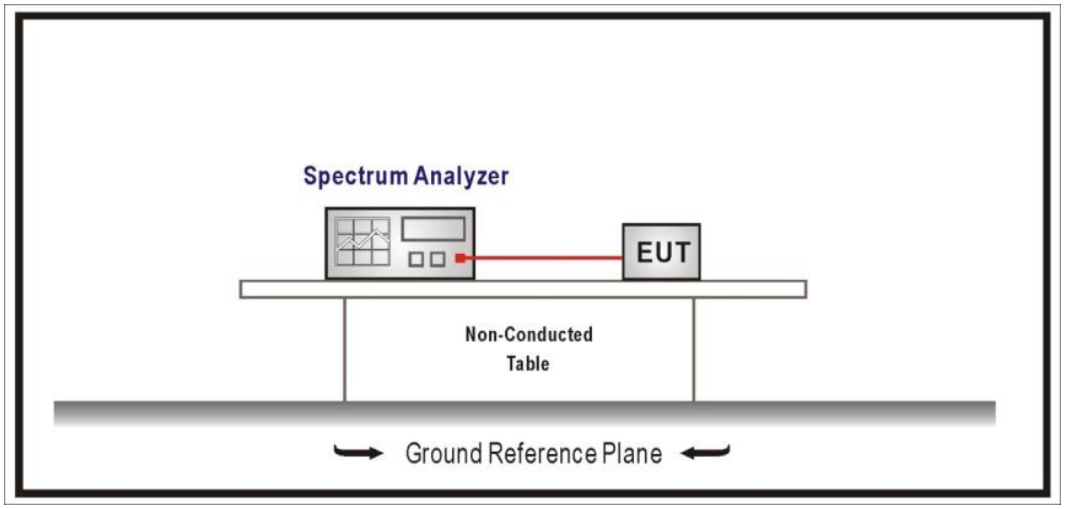

9.2. Test Limit

In any 100 kHz bandwidth outside the frequency band in which the spread spectrum or digitally modulated device is operating, the radio frequency power that is produced shall be at least 20 dB below that in the 100 kHz bandwidth within the band that contains the highest level of the desired power, based on either an RF conducted measurement, provided the transmitter demonstrates compliance with the peak conducted power limit.

9.3. Test Procedure

The EUT was setup according to ANSI C63.10-2020 and tested according to FHSS test procedure of KDB 558074.

9.4. Test Result of Antenna Port Conducted Emission

Refer as Appendix G

10. Radiated Emission

10.1. Test Setup

9 kHz ~ 30 MHz

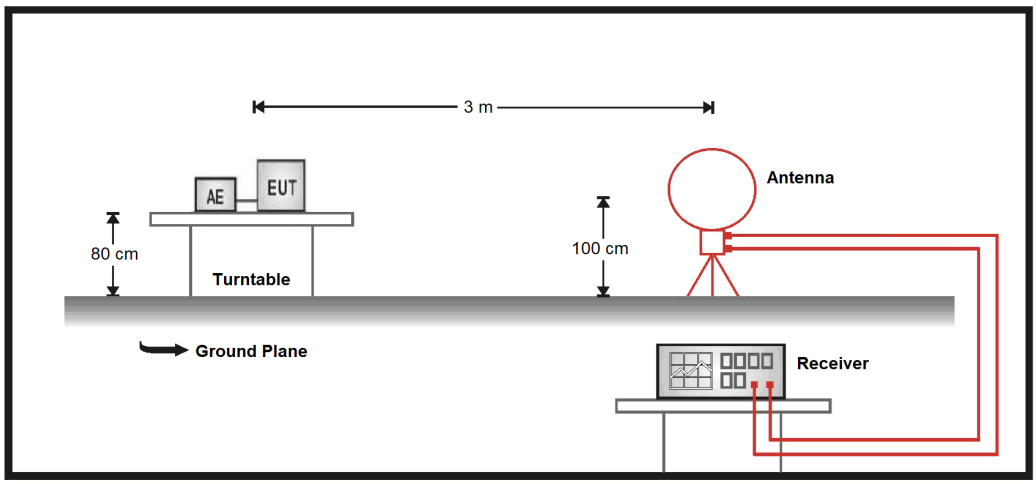

30 MHz ~ 1 GHz

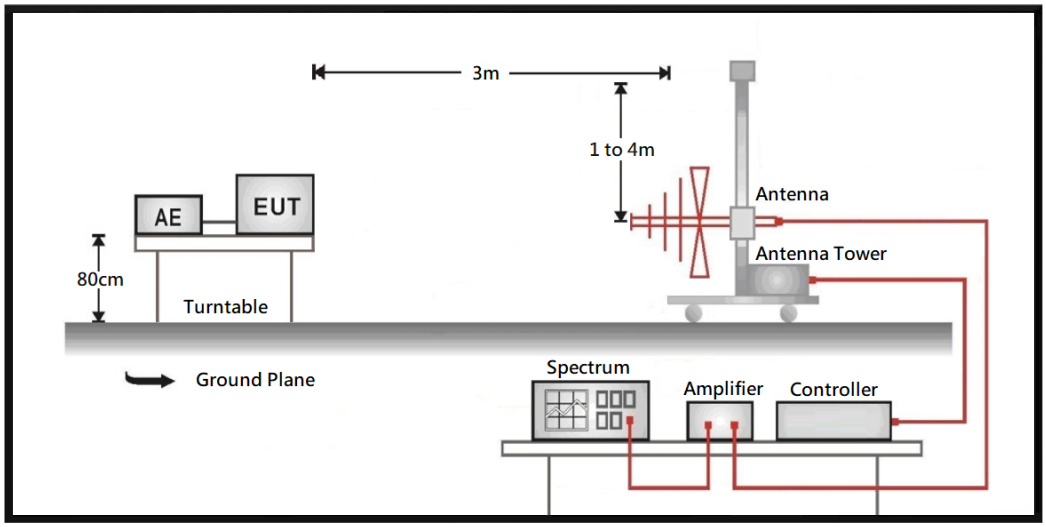

Above 1 GHz

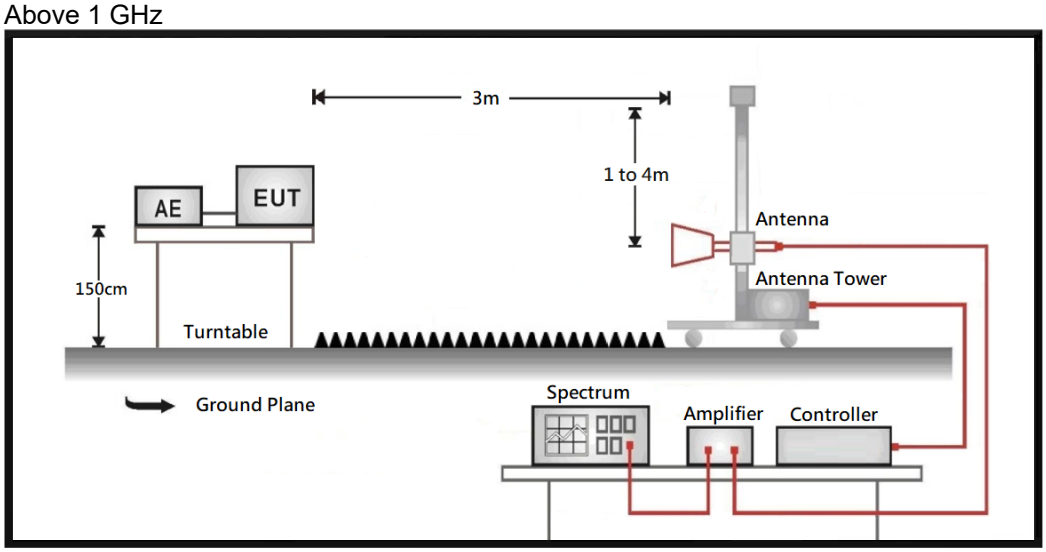

10.2. Test Limit

Frequency (MHz)	Field strength (μV/m)	Field strength (dBμV/m)	Measurement distance (m)
0.009 – 0.490	2400/F(kHz)	20 log (2400/F(kHz))	300
0.490 – 1.705	24000/F(kHz)	20 log (24000/F(kHz))	30
1.705 - 30	30	29.5	30
30 - 88	100	40	3
88 - 216	150	43.5	3
216 - 960	200	46	3
Above 960	500	54	3

Remarks:

1. Field strength (dBμV/m) = 20 log Field strength (μV/m)
2. In the Above Table, the tighter limit applies at the band edges.
3. Distance refers to the distance in meters between the measuring instrument antenna and the closed point of any part of the device or system.

10.3. Test Procedure

The EUT was setup according to ANSI C63.10-2020 and tested according to FHSS test procedure of KDB 558074.

The EUT and its simulators are placed on a turn table which is 0.8 or 1.5 meter above ground. The turn table can rotate 360 degrees to determine the position of the maximum emission level.

The antenna can move up and down between 1 meter and 4 meters to find out the maximum emission level. Both horizontal and vertical polarization of the antenna are set on measurement. In order to find the maximum emission, all of the interface cables must be manipulated according to ANSI C63.10-2020 on radiated measurement.

On any frequency or frequencies form 9 kHz(inculde The the lowest oscillator frequency generated within the device up to the 10th harmonic) to 1000 MHz, the limit shown are based on measuring equipment employing a quasi-peak detector function and on any frequency or frequencies above 1000 MHz the radiated limit shown are based upon the use of measurement instrumentation employing an average detector function. When average radiated emission measurement are included emission measurement below 1000 MHz, there also is a limit on the radio frequency emissions, as measured using instrumentation with a peak detector function, corresponding to 20 dB above the maximum permitted average limit.

The bandwidth below 1 GHz setting on the field strength meter is 120 kHz and above 1 GHz is 1 MHz.

10.4. Test Result of Radiated Emission

Refer as Appendix H