Testing Laboratory
3023

Test Report No:
25C0482R-RFUSV01S-B

# TEST REPORT
# FCC Rules & Regulations

| | |
|---|---|
| Product Name | Bluetooth Headset |
| Brand Name | Jabra |
| Model No. | HSC250W |
| FCC ID | BCE-HSC250W |
| Applicant´s Name / Address | GN Audio USA Inc.<br>900 Chelmsfort St, Tower 2, Floor 8 , Lowell, Massachusetts, 1851<br>United States |
| Manufacturer's Name | GN Hearing A/S |
| Test Method Requested, Standard | FCC CFR Title 47 Part 15 Subpart C Section 15.247 |
| Verdict Summary | IN COMPLIANCE |
| Documented by Jinn Chen | Jinn Chen |
| Approved by Alan Chen | Alan Chen |
| Date of Receipt | 2025/12/12 |
| Date of Issue | 2026/03/18 |
| Report Version | V1.0 |

# INDEX

page

Competences and Guarantees ..... 4
General Conditions ..... 4
Revision History ..... 5
Summary of Test Result ..... 6
1. General Information ..... 7
1.1. EUT Description ..... 7
1.2. EUT Information ..... 8
1.3. Testing Location Information ..... 8
1.4. Measurement Uncertainty ..... 9
1.5. List of Test Equipment ..... 10
2. Test Configuration of EUT ..... 11
2.1. Test Condition ..... 11
2.2. Test Frequency Mode ..... 11
2.3. Duty Cycle ..... 12
2.4. Measurement Configuration ..... 13
2.5. Tested System Details ..... 14
2.6. Configuration of Tested System ..... 14
2.7. EUT Operating Procedures ..... 15
3. AC Power Line Conducted Emission ..... 16
3.1. Test Setup ..... 16
3.2. Test Limit ..... 16
3.3. Test Procedure ..... 16
3.4. Test Result of AC Power Line Conducted Emission ..... 16
4. 6dB Bandwidth ..... 17
4.1. Test Setup ..... 17
4.2. Test Limit ..... 17
4.3. Test Procedures ..... 17
4.4. Test Result of 6dB Bandwidth ..... 17
5. Maximum Peak Conducted Output Power ..... 18
5.1. Test Setup ..... 18
5.2. Test Limit ..... 18
5.3. Test Procedures ..... 18
5.4. Test Result of Maximum Peak Conducted Output Power ..... 18
6. Power Spectral Density ..... 19
6.1. Test Setup ..... 19
6.2. Test Limit ..... 19

6.3. Test Procedures ..... 19
6.4. Test Result of Power Spectral Density ..... 19
7. Antenna Port Conducted Emission ..... 20
7.1. Test Setup ..... 20
7.2. Test Limit ..... 20
7.3. Test Procedure ..... 20
7.4. Test Result of Antenna Port Conducted Emission ..... 20
8. Radiated Emission ..... 21
8.1. Test Setup ..... 21
8.2. Test Limit ..... 22
8.3. Test Procedure ..... 22
8.4. Test Result of Radiated Emission ..... 22
Appendix A. Test Result of AC Power Line Conducted Emission
Appendix B. Test Result of 6dB Bandwidth
Appendix C. Test Result of Maximum Peak Conducted Output Power
Appendix D. Test Result of Power Spectral Density
Appendix E. Test Result of Antenna Port Conducted Emission
Appendix F. Test Result of Radiated Emission
Appendix G. Test Setup Photograph

## Competences and Guarantees

DEKRA is a testing laboratory competent to carry out the tests described in this report.
In order to assure the traceability to other national and international laboratories, DEKRA has a calibration and maintenance program for its measurement equipment.

DEKRA guarantees the reliability of the data presented in this report, which is the result of the measurements and the tests performed to the item under test on the date and under the conditions stated in the report and it is based on the knowledge and technical facilities available at DEKRA at the time of performance of the test.

DEKRA is liable to the client for the maintenance of the confidentiality of all information related to the item under test and the results of the test.

The results presented in this Test Report apply only to the particular item under test established in this document.

**IMPORTANT:** No parts of this report may be reproduced or quoted out of context, in any form or by any means, except in full, without the previous written permission of DEKRA.

## General Conditions

1. The test results relate only to the samples tested.
2. The test results shown in the test report are traceable to the national/international standard through the calibration report of the equipment and evaluated measurement uncertainty herein.
3. This report must not be used to claim product endorsement by TAF or any agency of the government.
4. The test report shall not be reproduced without the written approval of DEKRA Testing and Certification Co., Ltd.
5. Measurement uncertainties evaluated for each testing system and associated connections are given here to provide the system information for reference. Compliance determinations do not take into account measurement uncertainties for each testing system, but are based on the results of the compliance measurement.

## Revision History

| Version | Description | Issued Date |
|---|---|---|
| V1.0 | Initial issue of report | 2026/03/18 |

## Summary of Test Result

| Report Clause | Test Items | Result (PASS/FAIL) | Remark |
|---|---|---|---|
| 3 | AC Power Line Conducted Emission | PASS | - |
| 4 | 6dB Bandwidth | PASS | - |
| 5 | Maximum Peak Conducted Output Power | PASS | - |
| 6 | Power Spectral Density | PASS | - |
| 7 | Antenna Port Conducted Emission | PASS | - |
| 8 | Radiated Emission | PASS | - |

| Comments and Explanations |
|---|
| The declared of product specification for EUT presented in the report are provided by the manufacturer, and the manufacturer takes all the responsibilities for the accuracy of product specification. |

# 1. General Information

## 1.1. EUT Description

| | |
|---|---|
| Frequency Range | 2400 ~ 2483.5 MHz |
| Operating Frequency / Channel Number | GFSK (1 Mbps): 2402 ~ 2480 MHz /40 Channels<br>GFSK (2 Mbps): 2404 ~ 2478 MHz /37 Channels |
| Mode | Bluetooth LE / Bluetooth LE Audio |
| Type of Modulation | GFSK (1 Mbps / 2 Mbps) |

Note: The Bluetooth LE and Bluetooth LE Audio 2M PHY are not used to transmit packets on the three primary advertising channels.

| Accessories Information | | |
|---|---|---|
| No. | Equipment Name | Description |
| 1 | Type C to Type C Cable | shielded, 1.2m |
| 2 | Desk stand | DC 5V |

| Antenna Information | | | | |
|---|---|---|---|---|
| Item. | Brand Name | Part No. | Type | Gain (dBi) |
| 1 | Jabra | 50-10731 | Monopole | 2.99 |

Note: The antenna of EUT conforms to FCC 15.203.

| Model No. | specifications | Description |
|---|---|---|
| HSC250W | Mono | The specifications are identical; the only difference is the Mono or Stereo configuration. |
| | Stereo | |

From the models above, the Stereo model was selected as the representative model for the test, and its data has been recorded in this report.

## 1.2. EUT Information

| | |
|---|---|
| EUT Power Type | From USB / Battery / Desk stand |

## 1.3. Testing Location Information

| | |
|---|---|
| USA | FCC Designation Number: TW0033 / FCC Registration Number: 647365 |
| Canada | CAB Identifier Number: TW3023 / Company Number: 26930 |

| | |
|---|---|
| Site Description | Accredited by TAF |
| | Accredited Number: 3023 |

| | |
|---|---|
| Test Laboratory | DEKRA Testing and Certification Co., Ltd. |
| | Linkou Laboratory |
| Address | No. 85, Wenlin St., Linkou Dist., New Taipei City 244017, Taiwan, R.O.C. |
| Performed Location | No. 26, Huaya 1st Rd., Guishan Dist.,Taoyuan City 333411, Taiwan, R.O.C. |
| Phone Number | +886-3-275-7255 |
| Fax Number | +886-3-327-8031 |

Ambient conditions in the laboratory:

| Performed Item | Items | Required | Actual | Test Date | Tested By |
|---|---|---|---|---|---|
| AC Power Line Conducted Emission | Temperature (°C) | 10~40 °C | 25.2 °C | 2026/02/10 | Kevin Lai |
| | Humidity (%RH) | 10~90 % | 46.6 % | | |
| RF Conducted Emission | Temperature (°C) | 10~40 °C | 20.8~22.5 °C | 2025/12/29 ~ 2026/01/21 | Kevin Lai |
| | Humidity (%RH) | 10~90 % | 62.6~67.6 % | | Neko Chen |
| Radiated Emission | Temperature (°C) | 10~40 °C | 23.4~24.1 °C | 2026/01/27 ~ 2026/02/11 | Nova Chu |
| | Humidity (%RH) | 10~90 % | 55.4~62.3% | | Caster |

## 1.4. Measurement Uncertainty

Uncertainties have been calculated according to the DEKRA internal document.

The reported expanded uncertainties are based on a standard uncertainty multiplied by a coverage factor of k=2, providing a level of confidence of approximately 95%.

Measurement uncertainties evaluated for each testing system and associated connections are given here to provide the system information for reference. Compliance determinations do not take into account measurement uncertainties for each testing system, but are based on the results of the compliance measurement.

| Test item | Uncertainty |
|---|---|
| AC Power Line Conducted Emission | ±3.50 dB |
| 6dB Bandwidth | ±1580.61 Hz |
| Maximum Peak Conducted Output Power | Spectrum Analyzer: ±2.13 dB<br>Power Meter: ±1.05 dB |
| Power Spectral Density | ±2.13 dB |
| Antenna Port Conducted Emission | ±2.13 dB |
| Radiated Emission | 9 kHz~30 MHz: ±3.30 dB<br>30 MHz~1 GHz: ±5.19 dB<br>1 GHz~18 GHz: ±4.46 dB<br>18 GHz~40 GHz: ±4.19 dB |
| Duty Cycle | ±0.62 % |

## 1.5. List of Test Equipment

**For Conduction Measurements / HY-SR01**

| | Equipment | Manufacturer | Model No. | Serial No. | Cal. Date | Due Date |
|---|---|---|---|---|---|---|
| V | EMI Test Receiver | R&S | ESR7 | 101601 | 2025/04/28 | 2026/04/27 |
| V | Two-Line V-Network | R&S | ENV216 | 101306 | 2024/04/01 | 2026/03/31 |
| V | Two-Line V-Network | R&S | ENV216 | 101307 | 2025/08/06 | 2027/08/05 |
| V | Coaxial Cable | SUHNER | RG400_BNC | RF001 | 2026/01/10 | 2027/01/09 |

Note:
1. Two-Line V-Network is calibrated every two years, the other equipment is calibrated every year.
2. The test instruments marked with “V” are used to measure the final test results.
3. Test Software Version: e3 230303 dekra V9.

**For Conducted Measurements / HY-SR02**

| | Equipment | Manufacturer | Model No. | Serial No. | Cal. Date | Due Date |
|---|---|---|---|---|---|---|
| V | Spectrum Analyzer | R&S | FSV30 | 103467 | 2025/05/29 | 2026/05/28 |
| V | Spectrum Analyzer | KEYSIGHT | N9010A | MY54510317 | 2025/08/04 | 2026/08/03 |
| V | Peak Power Analyzer | KEYSIGHT | 8990B | MY51000539 | 2025/05/05 | 2026/05/04 |
| V | Wideband Power Sensor | KEYSIGHT | N1923A | MY59240002 | 2025/05/07 | 2026/05/06 |
| V | Wideband Power Sensor | KEYSIGHT | N1923A | MY59240003 | 2025/05/07 | 2026/05/06 |

Note:
1. All equipment is calibrated every year.
2. The test instruments marked with “V” are used to measure the final test results.
3. Test Software Version : DTC_RF_Tool_Release V2.0.37.

**For Radiated Measurements /HY-CB02**

| | Equipment | Manufacturer | Model No. | Serial No. | Cal. Date | Due Date |
|---|---|---|---|---|---|---|
| V | Loop Antenna | TESEQ | HLA6121 | 49611 | 2025/02/18 | 2026/02/17 |
| V | Bi-Log Antenna | SCHWARZBECK | VULB9168 | 9168-0675 | 2025/08/14 | 2027/08/13 |
| V | Horn Antenna | RF SPIN | DRH18-E | 210503A18ES | 2024/02/29 | 2026/02/28 |
| V | Horn Antenna | Com-Power | AH-840 | 101100 | 2025/10/07 | 2027/10/06 |
| V | Pre-Amplifier | Queitek | MPA0301 | AP-180C | 2026/01/10 | 2027/01/09 |
| | Pre-Amplifier | SGH | SGH118-HS | 20211102-1 | 2026/01/10 | 2027/01/09 |
| V | Pre-Amplifier | SGH | PRAMP118 | 20200203 | 2026/01/10 | 2027/01/09 |
| V | Pre-Amplifier | EMCI | EMC05820SE | 980285 | 2026/01/10 | 2027/01/09 |
| | Pre-Amplifier | MICZEN | MZLNA1850GAC40 | WB0103001 | 2026/01/10 | 2027/01/09 |
| V | Pre-Amplifier | EMCI | EMC184045SE | 980369 | 2026/01/10 | 2027/01/09 |
| V | Coaxial Cable | EMCI | EMC102-KM-KM-600 | 160311 | 2026/01/10 | 2027/01/09 |
| V | Coaxial Cable | SGH | HC360-2.92M/2.92M-7.0M | 202108-1 | 2026/01/10 | 2027/01/09 |
| V | Filter | MICRO TRONICS | BRM20887 | G002 | 2026/01/05 | 2027/01/04 |
| | Filter | MICRO TRONICS | BRM50716 | G067 | 2026/01/05 | 2027/01/04 |
| V | EMI Test Receiver | R&S | ESR3 | 102793 | 2025/12/01 | 2026/11/30 |
| V | Spectrum Analyzer | R&S | FSV3044 | 101113 | 2025/12/23 | 2026/12/22 |
| V | Coaxial Cable | SGH | HA800 | GD20110223-2 | 2026/01/10 | 2027/01/09 |
| V | Coaxial Cable | SGH | HA800 | GD20110222-4 | 2026/01/10 | 2027/01/09 |
| V | Coaxial Cable | SGH | SGH18 | 202108-5 | 2026/01/10 | 2027/01/09 |
| V | Coaxial Cable | SGH | HA800-SMASMA-10M | 202212-1 | 2026/01/10 | 2027/01/09 |

Note:
1. Bi-Log Antenna and Horn Antenna are calibrated every two years, the other equipment is calibrated every year.
2. The test instruments marked with “V” are used to measure the final test results.
3. Test Software Version: e3 230303 dekra V9.

# 2. Test Configuration of EUT

## 2.1. Test Condition

| EUT Operational Condition | |
|---|---|
| Testing Voltage | DC 5V by USB / Desk stand |

## 2.2. Test Frequency Mode

| Test Software Version | AB1595 Lab Test Tool / Version 5.6.0.4 |
|---|---|

Bluetooth LE

| Modulation | Frequency (MHz) | Power Setting |
|---|---|---|
| GFSK (1 Mbps) | 2402 | 39 |
| | 2440 | 39 |
| | 2480 | 39 |
| GFSK (2 Mbps) | 2404 | 39 |
| | 2440 | 39 |
| | 2478 | 39 |

Bluetooth LE Audio

| Modulation | Frequency (MHz) | Power Setting |
|---|---|---|
| GFSK (1 Mbps) | 2402 | 59 |
| | 2440 | 59 |
| | 2480 | 59 |
| GFSK (2 Mbps) | 2404 | 59 |
| | 2440 | 59 |
| | 2478 | 59 |

## 2.3. Duty Cycle

| Mode | On Time (ms) | On+Off Time (ms) | Duty Cycle (%) | Duty Factor (dB) | VBW (Hz) |
|---|---|---|---|---|---|
| GFSK (1 Mbps) | 2.0800 | 2.5000 | 83.20 | 0.80 | 500 |
| GFSK (2 Mbps) | 1.0400 | 2.5200 | 41.27 | 3.84 | 1000 |

| GFSK (1 Mbps) | GFSK (2 Mbps) |
|---|---|
| 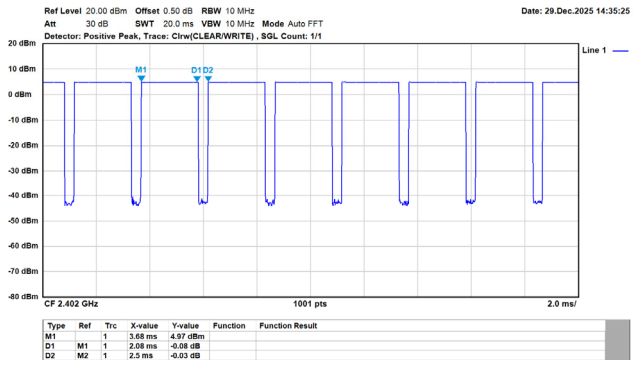 | 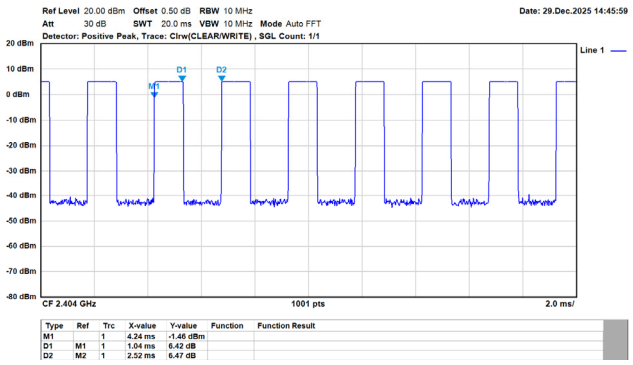 |

## 2.4. Measurement Configuration

| | | |
|---|---|---|
| Test Mode | Mode 1 (Transmit) | Bluetooth LE GFSK (1 Mbps) |
| | | Bluetooth LE GFSK (2 Mbps) |
| | | Bluetooth LE Audio GFSK (1 Mbps) |
| | | Bluetooth LE Audio GFSK (2 Mbps) |
| | Mode 2 (Charge mode) | |

Note:

1. Determining compliance shall be based on the results of the compliance measurement, without taking measurement instrumentation uncertainty into account.
2. For radiated emissions below 1 GHz and AC power line conducted emissions, all modes of operation were investigated, and the worst-case emissions are reported.
3. The radiation measurements are performed in the X, Y, and Z axis positions. Only the worst case is shown in the report.

## 2.5. Tested System Details

| No. | Equipment | Brand Name | Model No. | Serial No. | Power Cord |
|---|---|---|---|---|---|
| 1 | Notebook PC | DELL | Latitude 5501 | GS9GL13 | N/A |

For Charge Mode

| No. | Equipment | Brand Name | Model No. | Serial No. | Power Cord |
|---|---|---|---|---|---|
| 1 | Power Adapter | Apple | A1385 | N/A | N/A |
| 2 | Desk stand | Jabra | DIV040 | N/A | N/A |

## 2.6. Configuration of Tested System

Connection Diagram

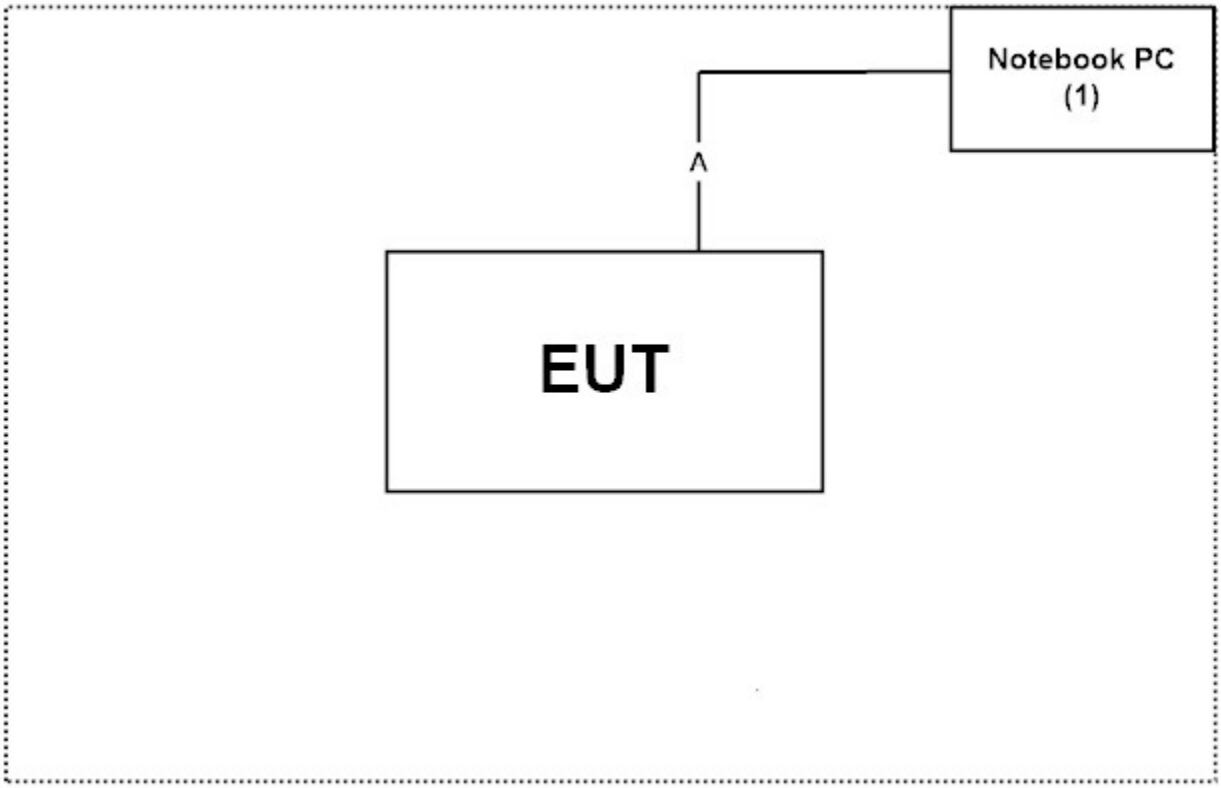


| Signal Cable Type | | Signal cable Description |
|---|---|---|
| A | Type C to Type C Cable | Shielded, 1.2m |

For Charge Mode

| Connection Diagram |
|---|

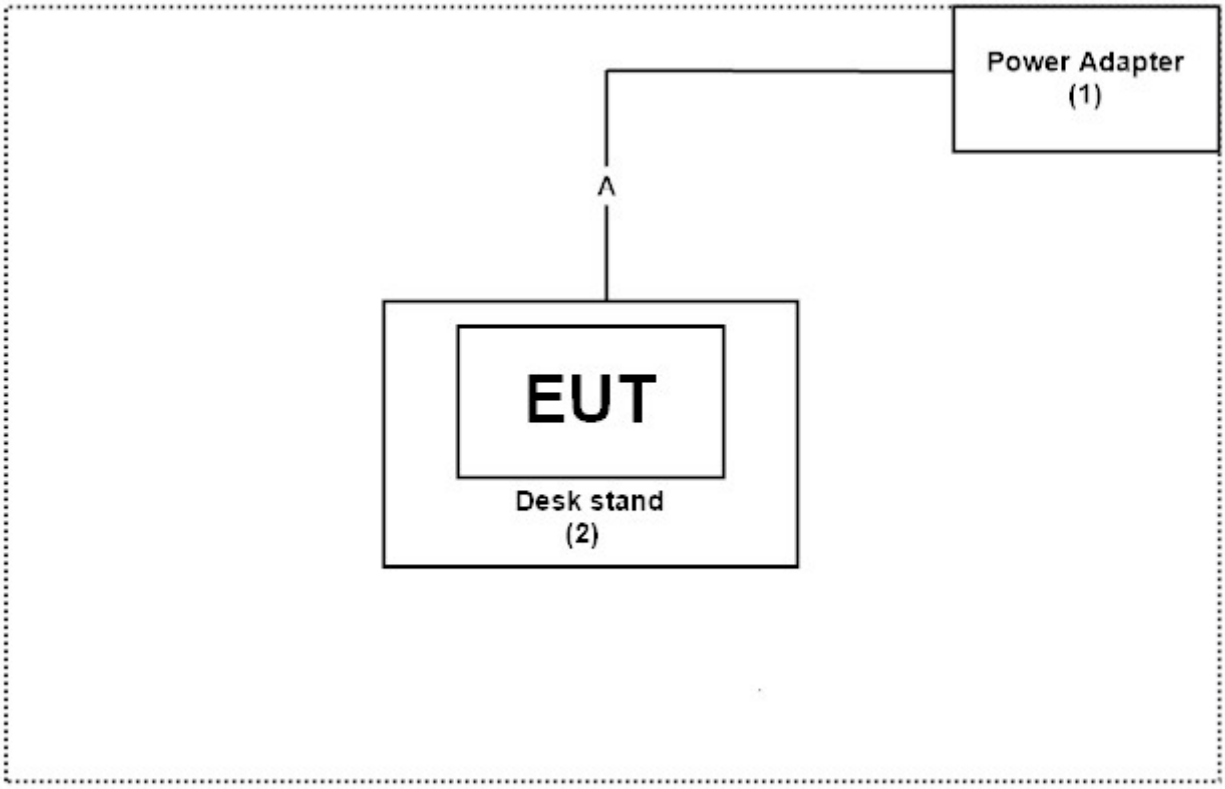


| Signal Cable Type | | Signal cable Description |
|---|---|---|
| A | Type C to Type C Cable | Shielded, 1.2m |

## 2.7. EUT Operating Procedures

| | |
|---|---|
| 1 | Setup the EUT as shown in Section 2.6. |
| 2 | Execute software “AB1595 Lab Test Tool / Version 5.6.0.4” on the Notebook PC. |
| 3 | Configure the test mode, the test channel, and the data rate. |
| 4 | Verify that the EUT works properly. |

# 3. AC Power Line Conducted Emission

## 3.1. Test Setup

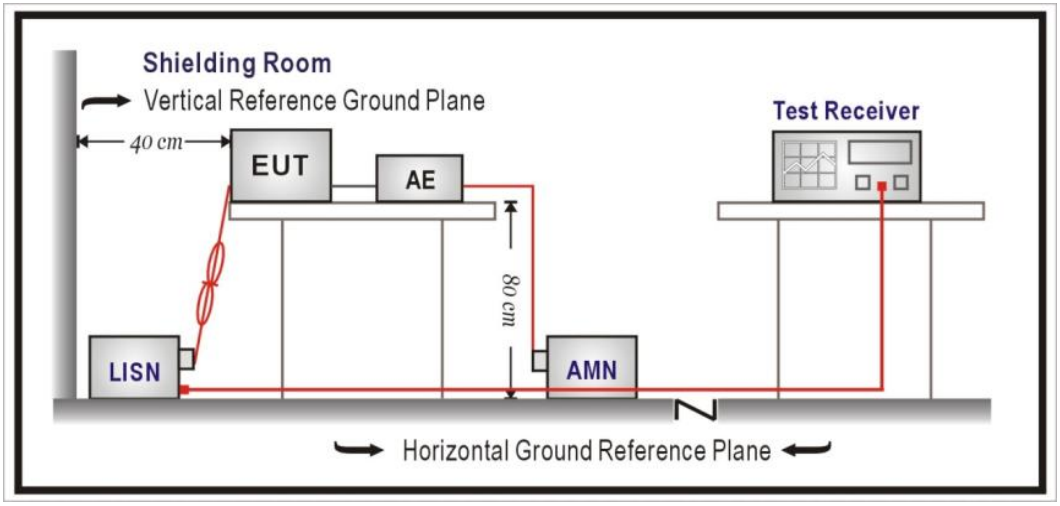


## 3.2. Test Limit

| Frequency (MHz) | QP (dBμV) | AV (dBμV) |
|---|---|---|
| 0.15 - 0.50 | 66 - 56 | 56 - 46 |
| 0.50 - 5.0 | 56 | 46 |
| 5.0 - 30 | 60 | 50 |

Remarks: In the above table, the tighter limit applies at the band edges.

## 3.3. Test Procedure

The EUT was setup according to ANSI C63.10-2020 for AC Power Line Conducted Emissions.

## 3.4. Test Result of AC Power Line Conducted Emission

Refer as Appendix A

# 4. 6dB Bandwidth

## 4.1. Test Setup

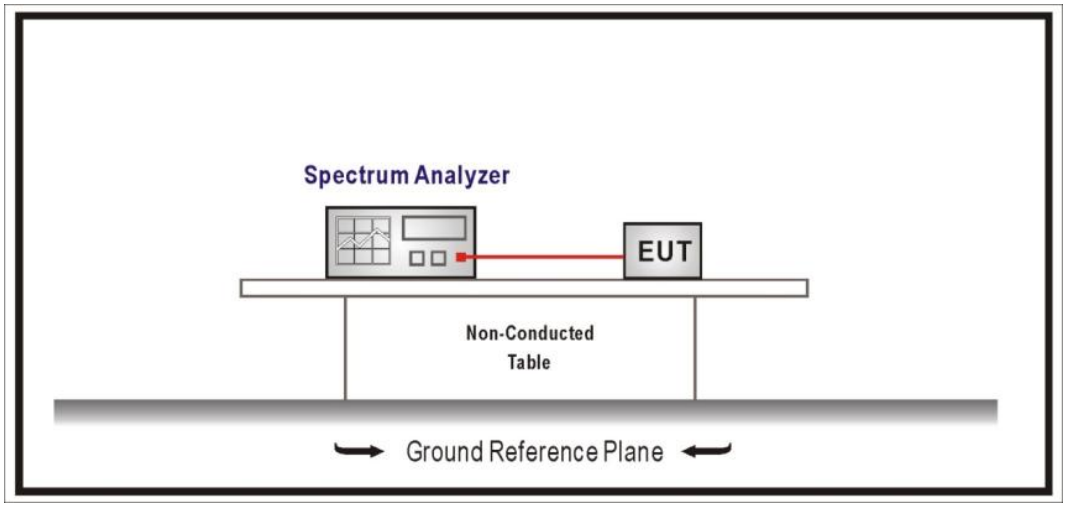


## 4.2. Test Limit

The 6 dB bandwidth: ≧ 500 kHz.

## 4.3. Test Procedures

The EUT was setup according to ANSI C63.10-2020; tested according to DTS test procedure of KDB 558074.

## 4.4. Test Result of 6dB Bandwidth

Refer as Appendix B

# 5. Maximum Peak Conducted Output Power

## 5.1. Test Setup

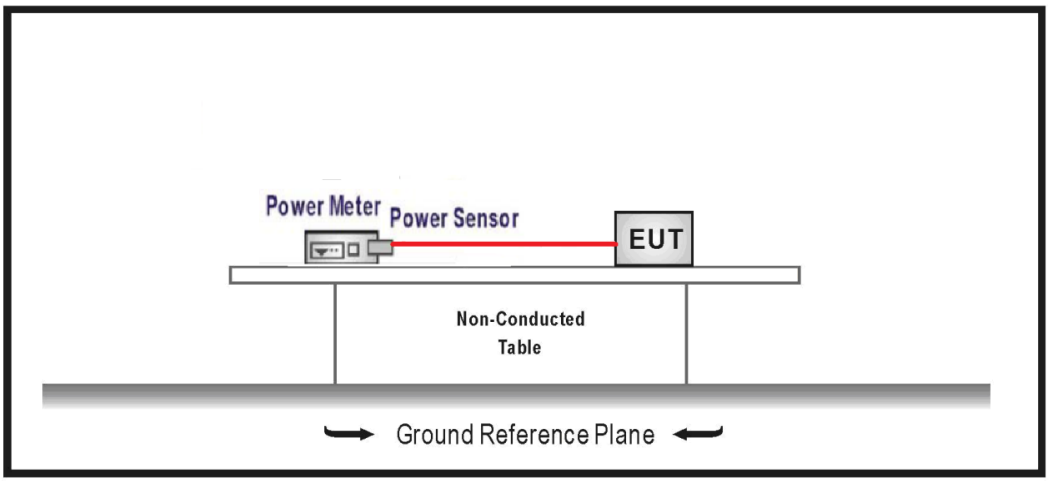


## 5.2. Test Limit

The Maximum Peak Conducted Output Power shall be less 1 Watt.

## 5.3. Test Procedures

The EUT was setup according to ANSI C63.10-2020; tested according to DTS test procedure of KDB 558074.

## 5.4. Test Result of Maximum Peak Conducted Output Power

Refer as Appendix C

# 6. Power Spectral Density

## 6.1. Test Setup

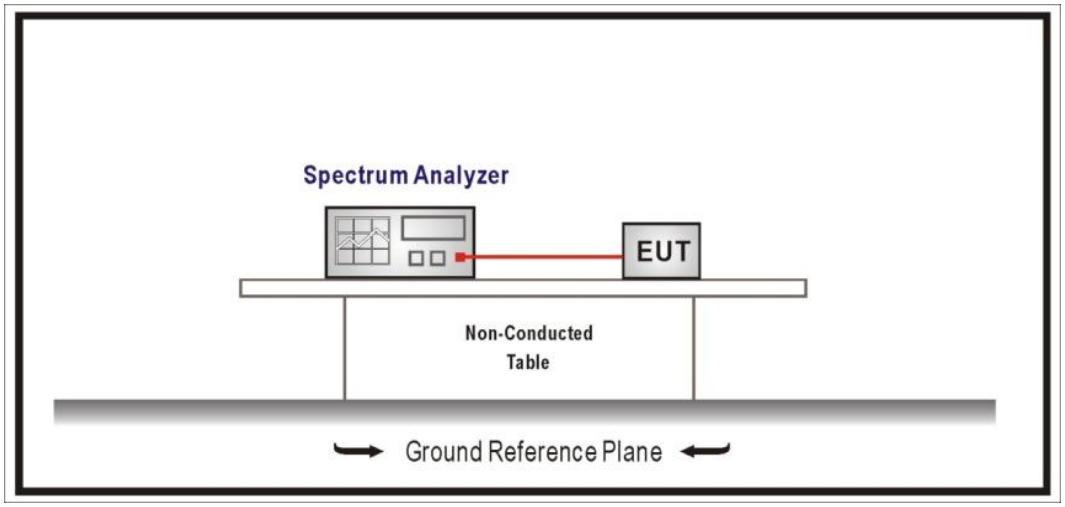


## 6.2. Test Limit

The power spectral density conducted from the intentional radiated to the antenna shall not be greater than +8 dBm in any 3 kHz band during any time interval of continuous transmission.

## 6.3. Test Procedures

The EUT was setup according to ANSI C63.10-2020; tested according to DTS test procedure of KDB 558074.

## 6.4. Test Result of Power Spectral Density

Refer as Appendix D

# 7. Antenna Port Conducted Emission

## 7.1. Test Setup

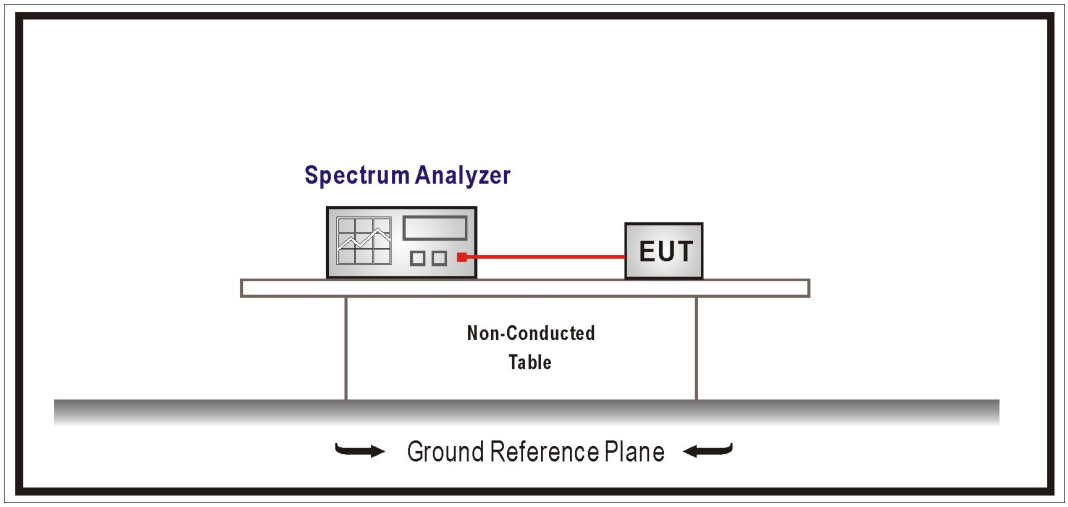


## 7.2. Test Limit

| RF output power procedure | Limit (dBc) |
|---|---|
| Peak output power procedure | 20 |
| Average output power procedure | 30 |

Remarks:

1. In any 100 kHz bandwidth outside the frequency band in which the spread spectrum or digitally modulated intentional radiator is operating, the radio frequency power that is produced by the intentional radiator shall be at least 20 dB below that in the 100 kHz bandwidth within the band that contains the highest level of the desired power, based on either an RF conducted or a radiated measurement, provided the transmitter demonstrates compliance with the peak conducted power limit.
2. If the transmitter complies with the conducted power limit based on the use of RMS averaging over a time interval, the attenuation required under this paragraph shall be 30 dB instead of 20 dB.

## 7.3. Test Procedure

The EUT was setup according to ANSI C63.10-2020 and tested according to DTS test procedure of KDB 558074.

## 7.4. Test Result of Antenna Port Conducted Emission

Refer as Appendix E

# 8. Radiated Emission

## 8.1. Test Setup

9 kHz ~ 30 MHz

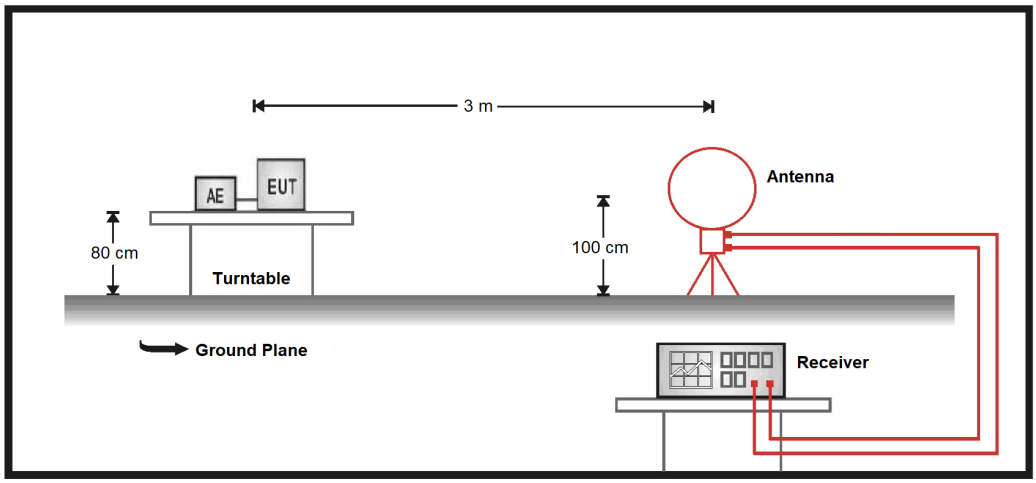


30 MHz ~ 1 GHz

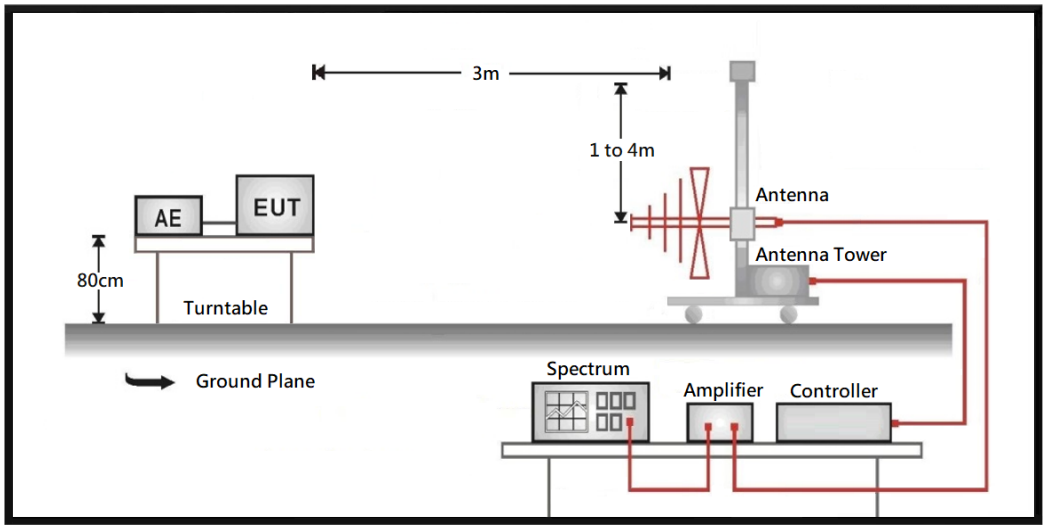


Above 1 GHz

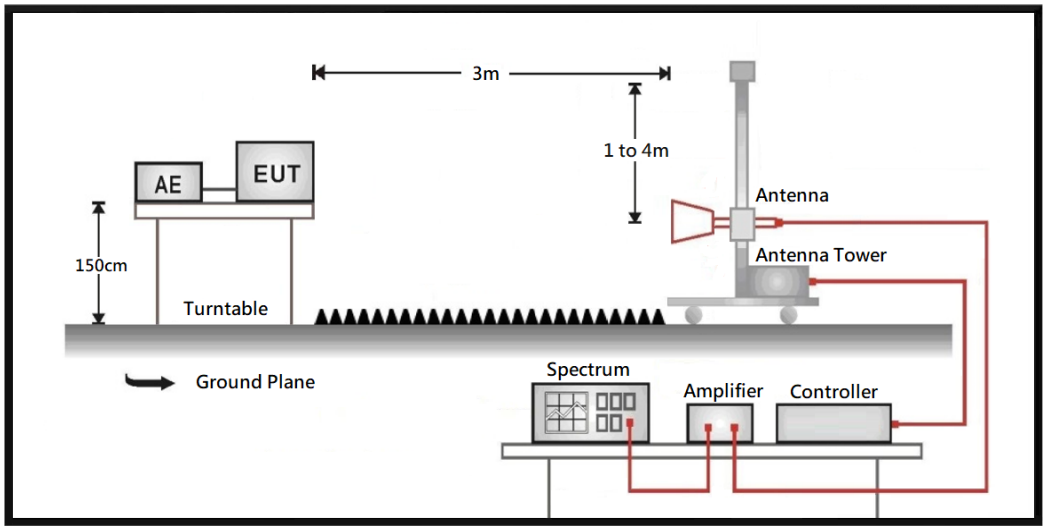

## 8.2. Test Limit

| Frequency (MHz) | Field strength (μV/m) | Field strength (dBμV/m) | Measurement distance (m) |
|---|---|---|---|
| 0.009 – 0.490 | 2400/F(kHz) | 20 log (2400/F(kHz)) | 300 |
| 0.490 – 1.705 | 24000/F(kHz) | 20 log (24000/F(kHz)) | 30 |
| 1.705 - 30 | 30 | 29.5 | 30 |
| 30 - 88 | 100 | 40 | 3 |
| 88 - 216 | 150 | 43.5 | 3 |
| 216 - 960 | 200 | 46 | 3 |
| Above 960 | 500 | 54 | 3 |

Remarks:

1. Field strength (dBμV/m) = 20 log Field strength (μV/m)
2. In the Above Table, the tighter limit applies at the band edges.
3. Distance refers to the distance in meters between the measuring instrument antenna and the closed point of any part of the device or system.

## 8.3. Test Procedure

The EUT was setup according to ANSI C63.10-2020 and tested according to DTS test procedure of KDB 558074.

The EUT and its simulators are placed on a turn table which is 0.8 or 1.5 meter above ground. The turn table can rotate 360 degrees to determine the position of the maximum emission level.

The antenna can move up and down between 1 meter and 4 meters to find out the maximum emission level. Both horizontal and vertical polarization of the antenna are set on measurement. In order to find the maximum emission, all of the interface cables must be manipulated according to ANSI C63.10-2020 on radiated measurement.

On any frequency or frequencies form 9 kHz(inculde The the lowest oscillator frequency generated within the device up to the 10th harmonic) to 1000 MHz, the limit shown are based on measuring equipment employing a quasi-peak detector function and on any frequency or frequencies above 1000 MHz the radiated limit shown are based upon the use of measurement instrumentation employing an average detector function. When average radiated emission measurement are included emission measurement below 1000 MHz, there also is a limit on the radio frequency emissions, as measured using instrumentation with a peak detector function, corresponding to 20 dB above the maximum permitted average limit.

The bandwidth below 1 GHz setting on the field strength meter is 120 kHz and above 1 GHz is 1 MHz.

## 8.4. Test Result of Radiated Emission

Refer as Appendix F