© 2016 GN Audio A/S. All rights reserved. Jabra® is a trademark of GN Audio A/S. The Bluetooth® word mark and logos are registered trademarks owned by the Bluetooth SIG, Inc. and any use of such marks by GN Audio A/S is under license. Other trademarks and trade names are those of their respective owners.

MADE IN CHINA

MODEL: xxxxxx

Declaration of Conformity can be found on
www.jabra.com/CP/US/declarations-of-conformity

Jabra

Pro 930

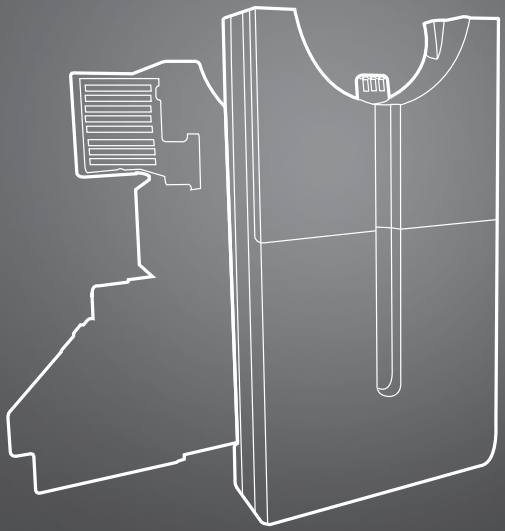

Jabra GN

Quick start guide

GN Making Life Sound Better

Attaching Jabra Triton to your desk phone

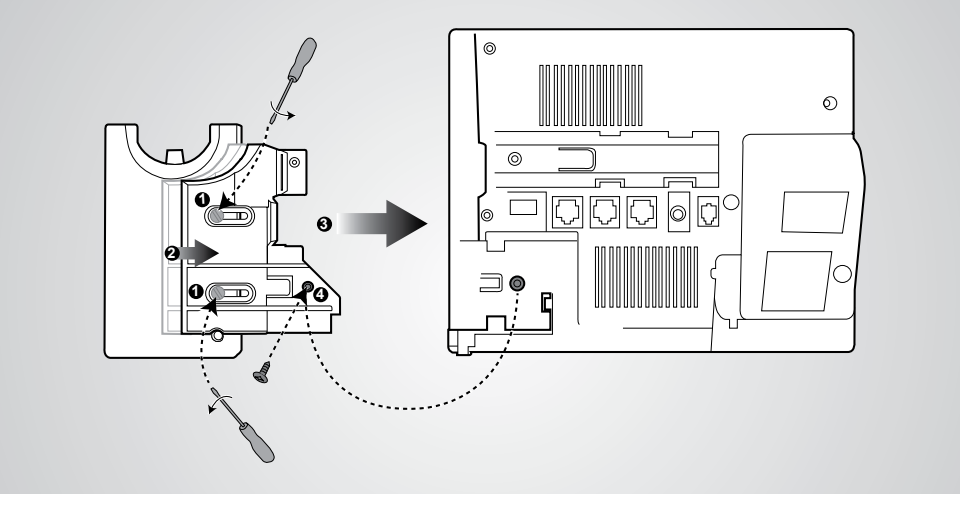

1 Loosen the screws

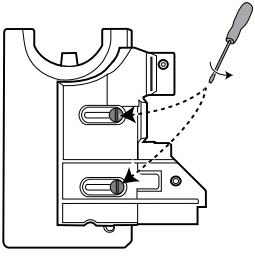

2 XXXXXXXX.

Slide the attachment fully open, and retighten the screws.

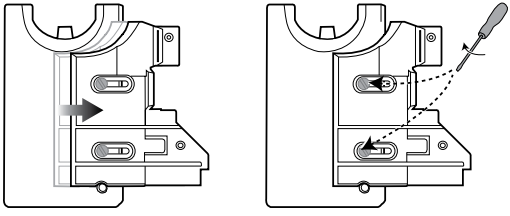

3 XXXXXXXX.

Attach the dock to the back of the phone.

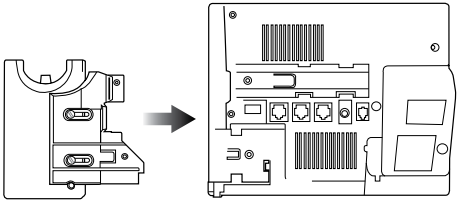

4 XXXXXXXX.

Insert the screw and tighten it.

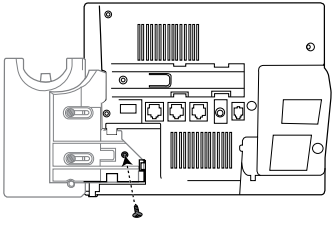

Assembling the headset

1. Align the headset and the headband attachment, as illustrated, and press firmly together until they click into place (snap-to-click).
2. Rotate the microphone boom arm for left or right ear use.
3. Adjust the length of the headband for the optimal fit.

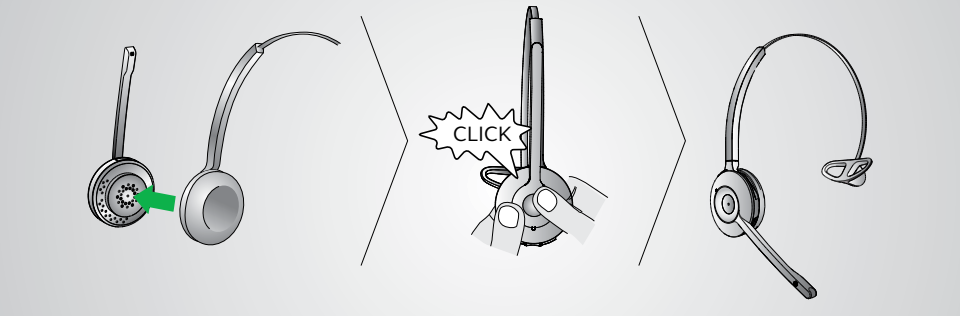

Charging the headset

Dock the headset in the base. When docked correctly the headset battery will begin charging. It takes approx. XX hours to fully charge the headset.

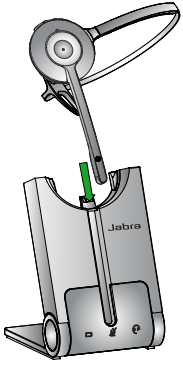

Using the headset

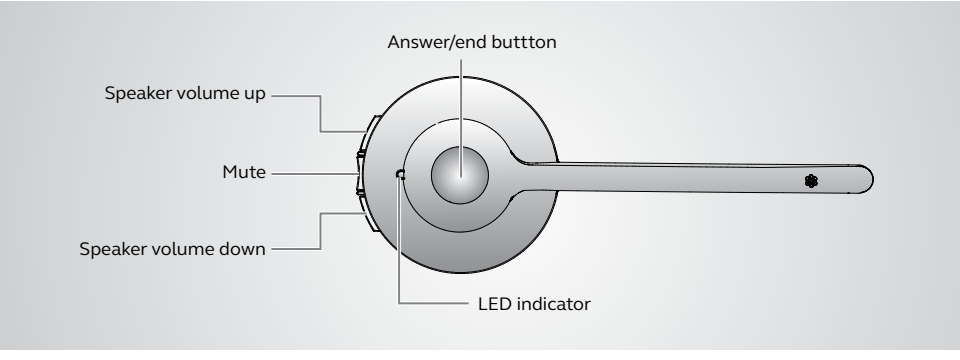

Using the base

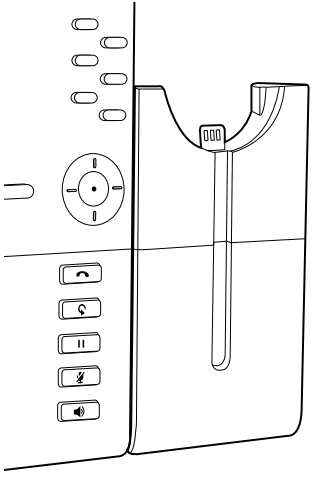

LED Status	
	Battery charging (slow flash)
	Full battery
	Medium battery
	Low battery
	Very low battery (fast flash)
	Microphone muted
	Active audio link between headset and base
	Searching for headset

1 Loosen the screws

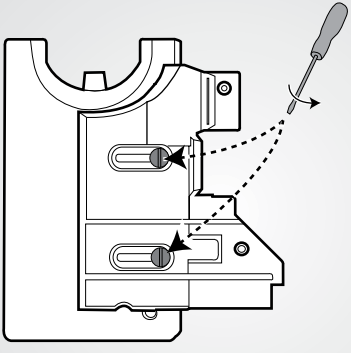

2 Slide the attachment and retighten

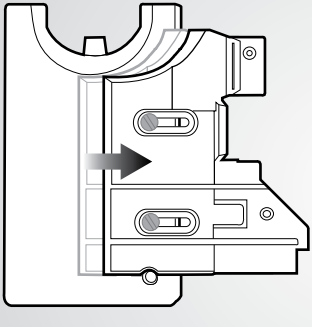

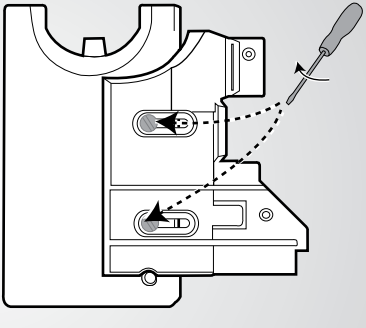

3 Attach the dock

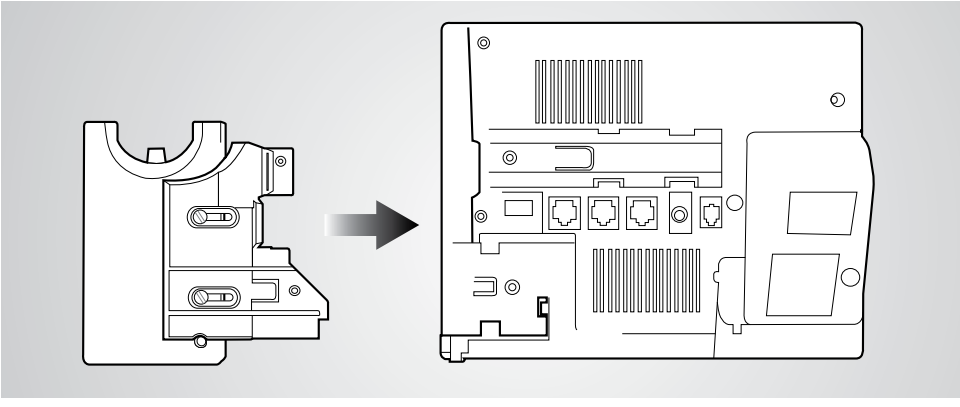
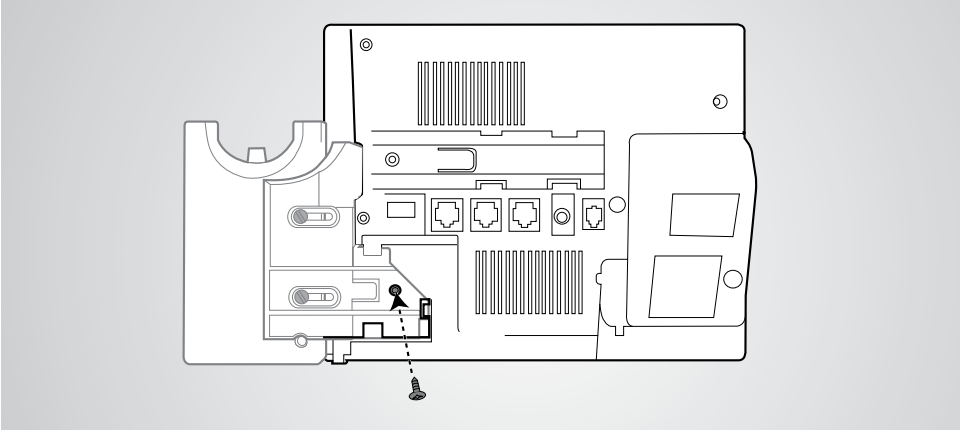
4 Insert the screw and tighten