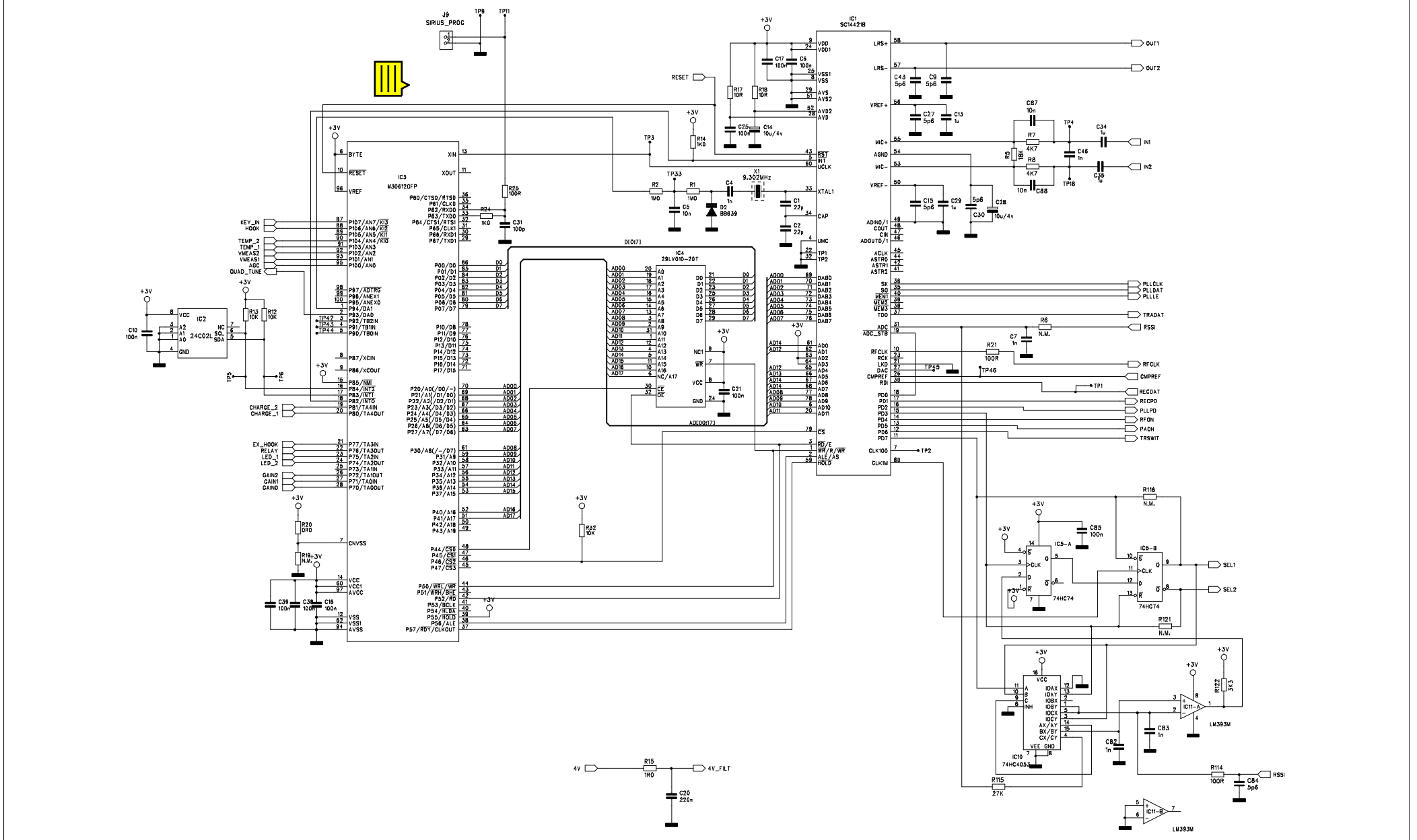

PROJECT	Active BS	VER	3
TITLE	BASEBAND	REV	A
DATE	000205 REF JM		
FILENAME	Active_BS_v1_Ro.sch		
SHEET OF SHEETS	1/3		

RTX

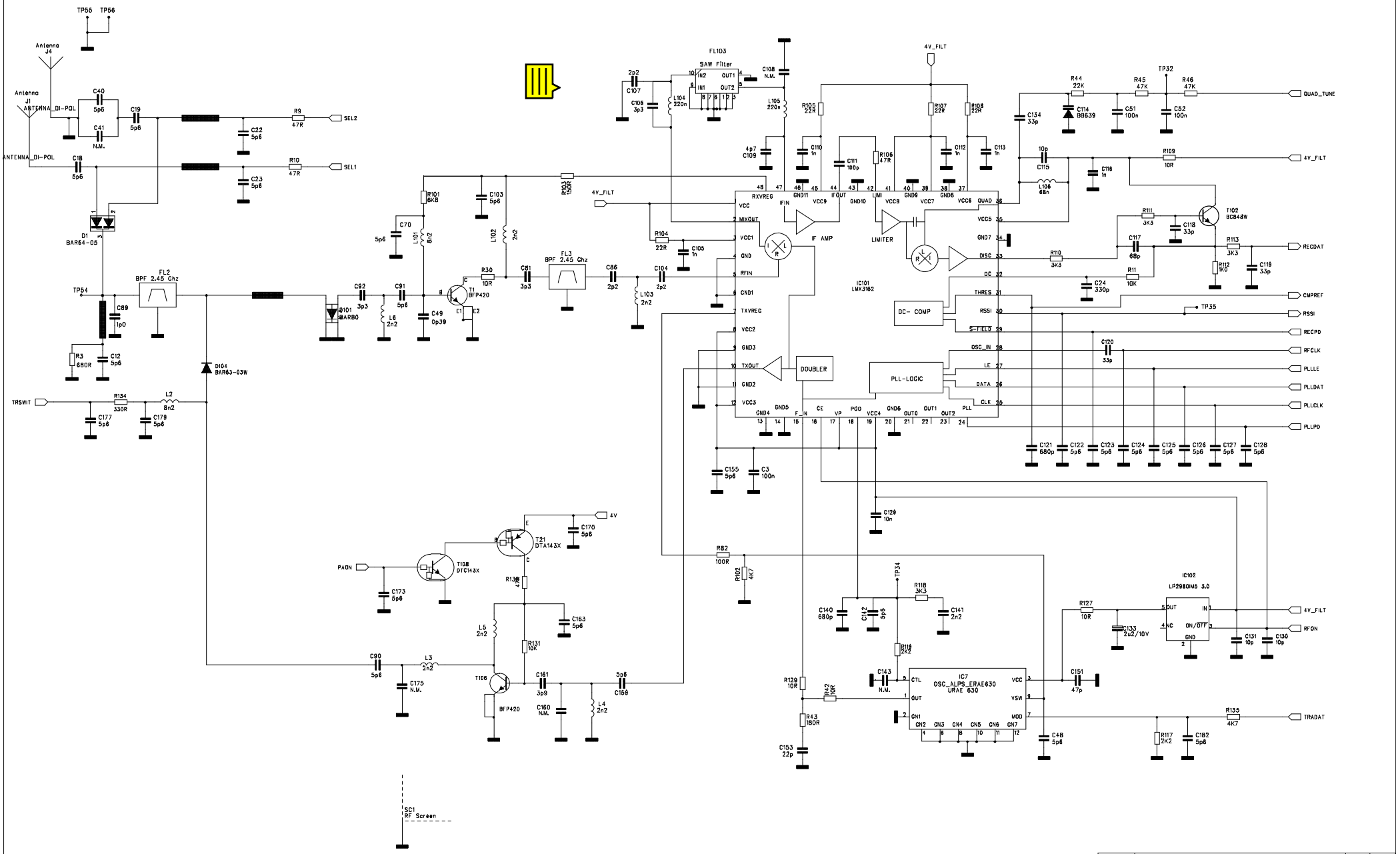

PROJECT	Active BS	VER	3
TITLE	RF	REV	A
DATE	000205 REF CS		
FILENAME	Activo_bs_v3_Re.sch		
SHEET OF SHEETS	2/3		

RTX

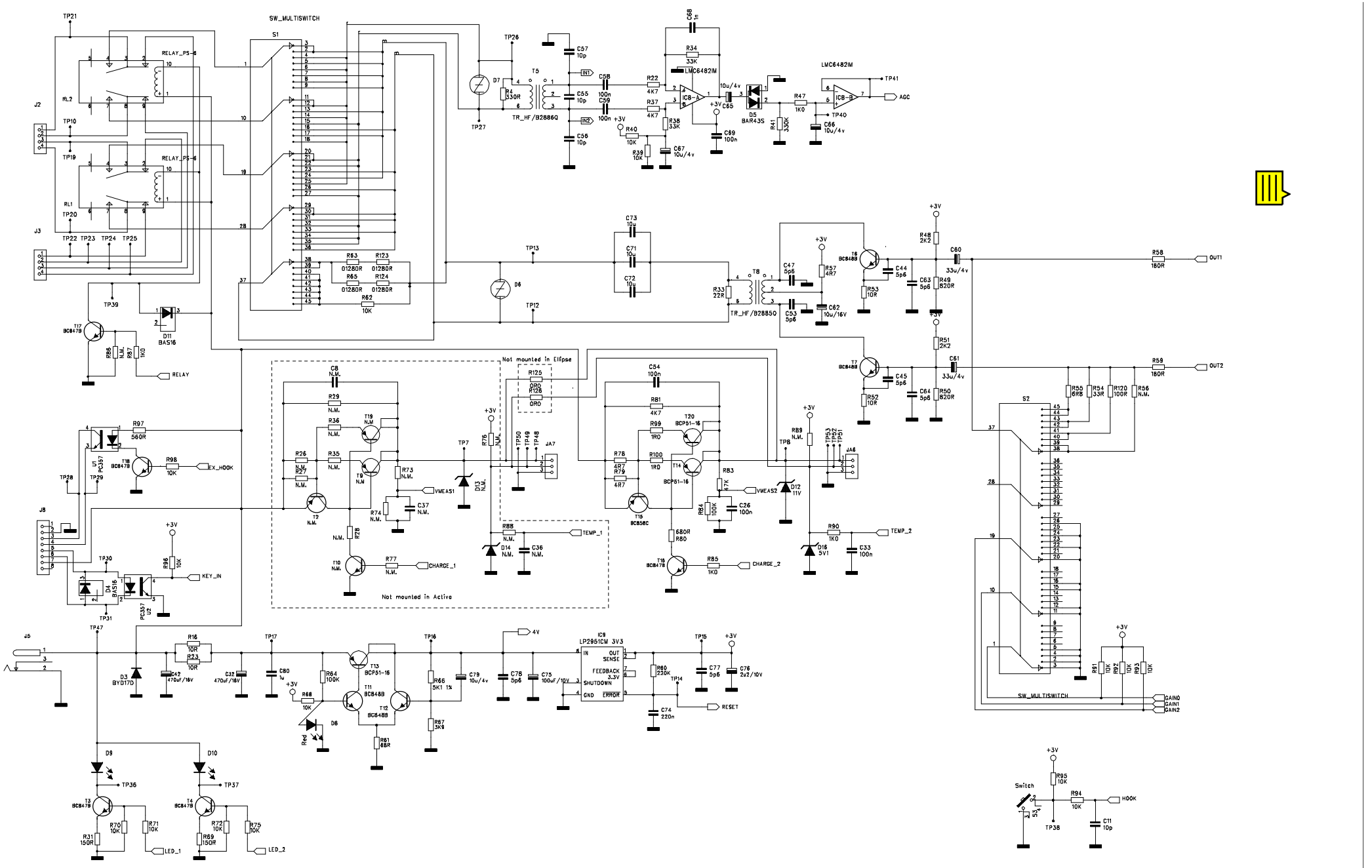

PROJECT	Activo BS	VER	3
TITLE	LINE	REV	A
DATE	000205 REF JM		
FILENAME	Activo_BS_v3_Ra.sch		
SHEET OF SHEETS	3/3		

RTX