A2097

LCD and Touch Screen removed

Apple Proprietary and Confidential

A2097

LCD/Touch Screen Assembly - Front

Apple Proprietary and Confidential

A2097

LCD/Touch Screen Assembly - Back

Apple Proprietary and Confidential

A2097
Internal View

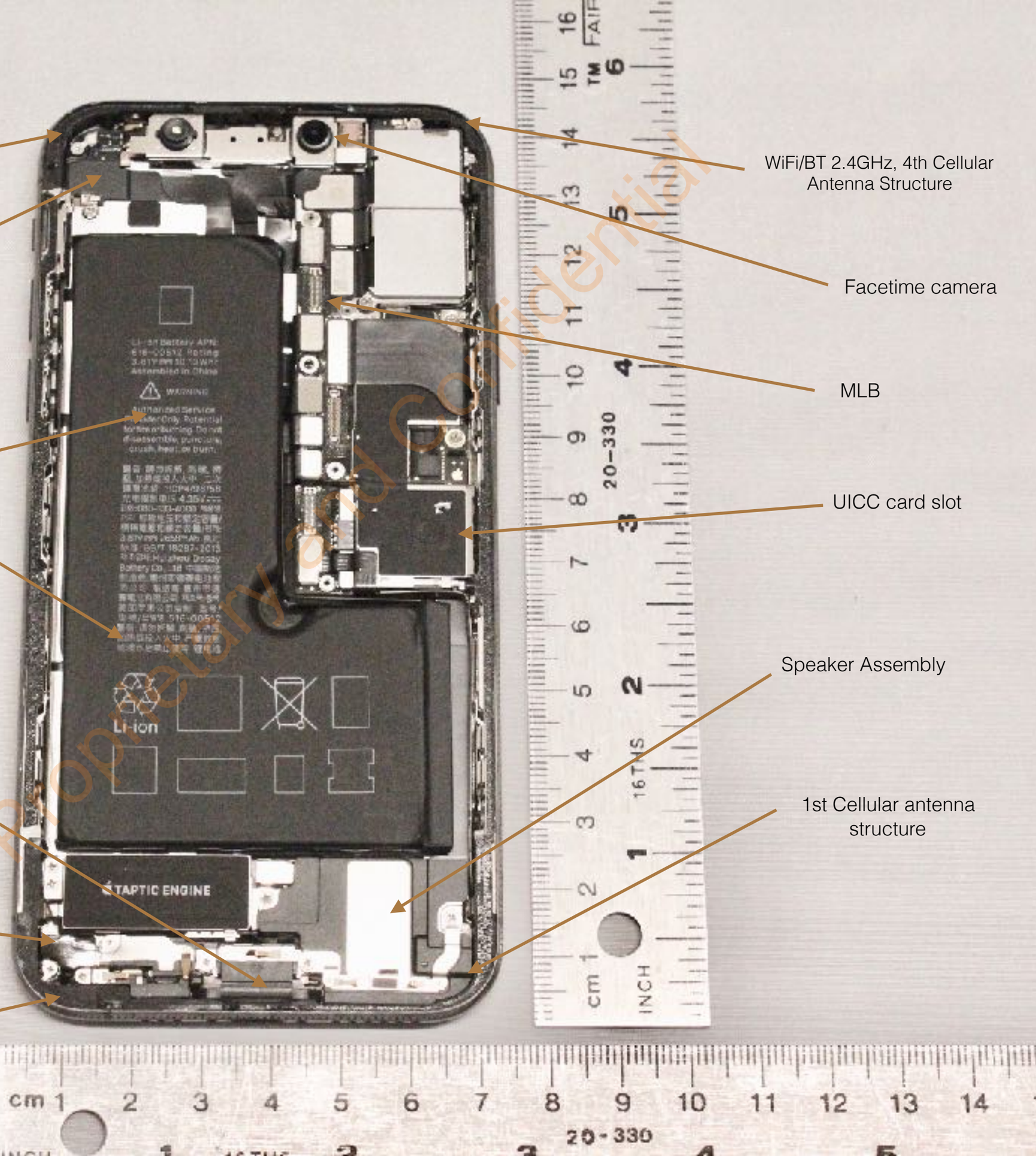

Apple Proprietary and Confidential

A2097

Earpiece, Flex assembly with Proximity sensor and Microphone- Front

Apple Proprietary and Confidential

A2097

Earpiece, Flex assembly with Proximity sensor and Microphone- Back

Apple Proprietary and Confidential

A2097
Rear camera - Front

Apple Proprietary and Confidential

A2097
Rear camera - Back

Apple Proprietary and Confidential

A2097
Speaker assembly - Front

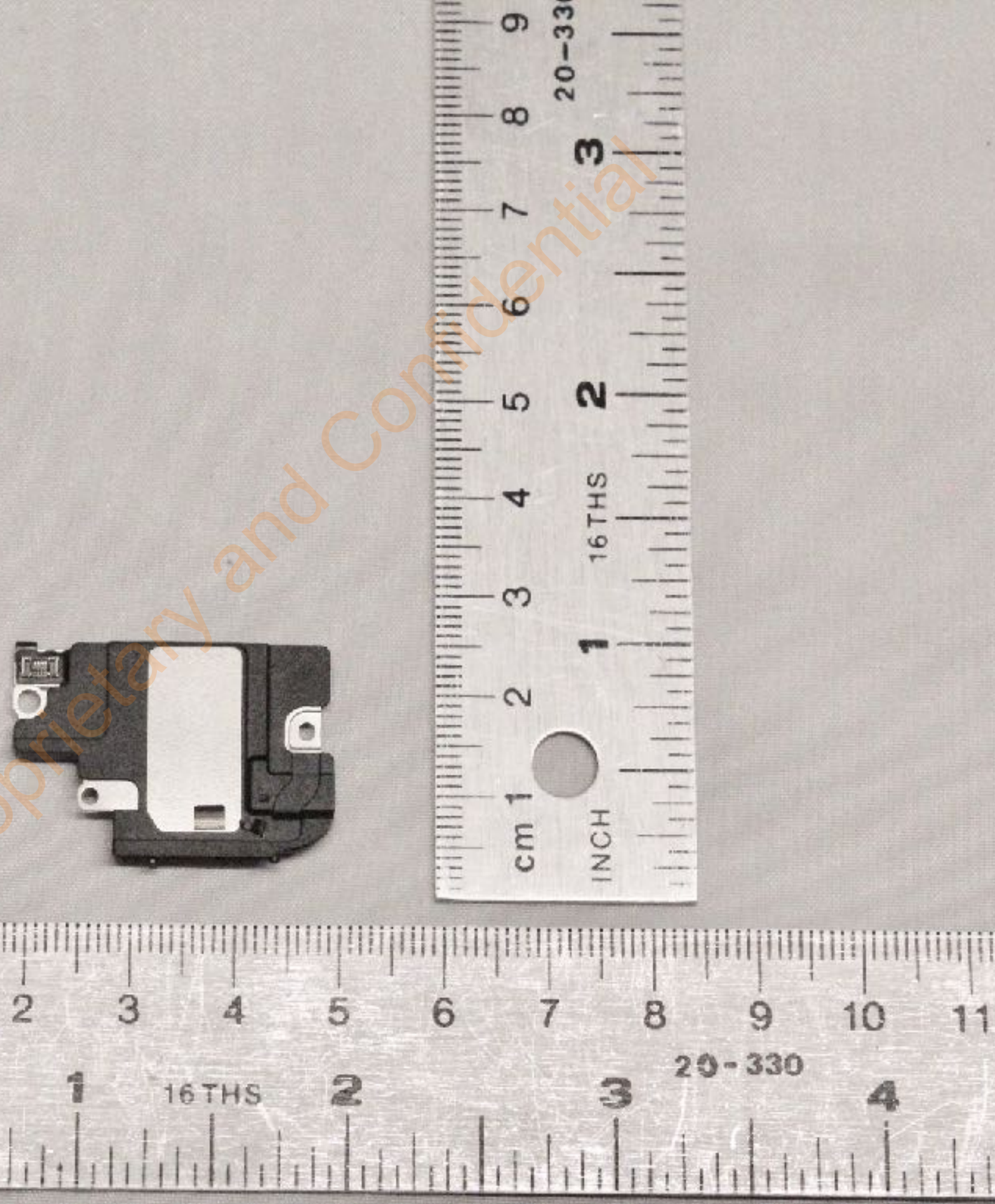

Apple Proprietary and Confidential

A2097
Speaker assembly - Back

Apple Proprietary and Confidential

A2097

Flex assembly with Lightning connector and microphone- Front

Apple Proprietary and Confidential

A2097
Flex assembly with Lightning connector
and microphone- Back

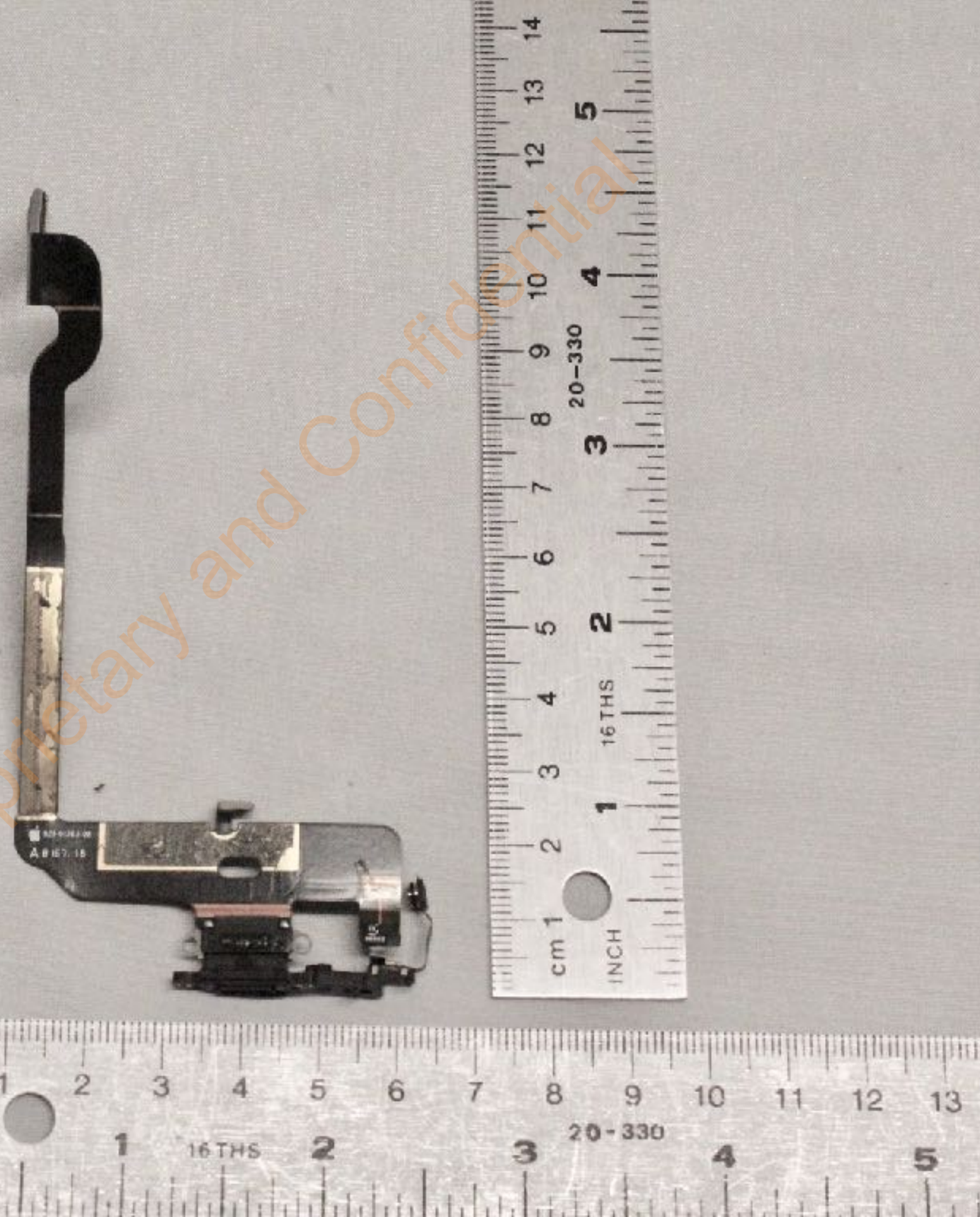

Apple Proprietary and Confidential

A2097
Flex assembly with 5GHz WiFi, WiFi/BT 2.4GHz/ 3rd cellular and 1st cellular antenna feed- Front

Apple Proprietary and Confidential

A2097

Flex assembly with 5GHz WiFi, WiFi/BT 2.4GHz/ 3rd cellular and 1st cellular antenna feed- Back

Apple Proprietary and Confidential

A2097

5GHz WiFi/ 3.4GHz cellular and GPS/
NFC/ 2nd cellular antenna feed- Front

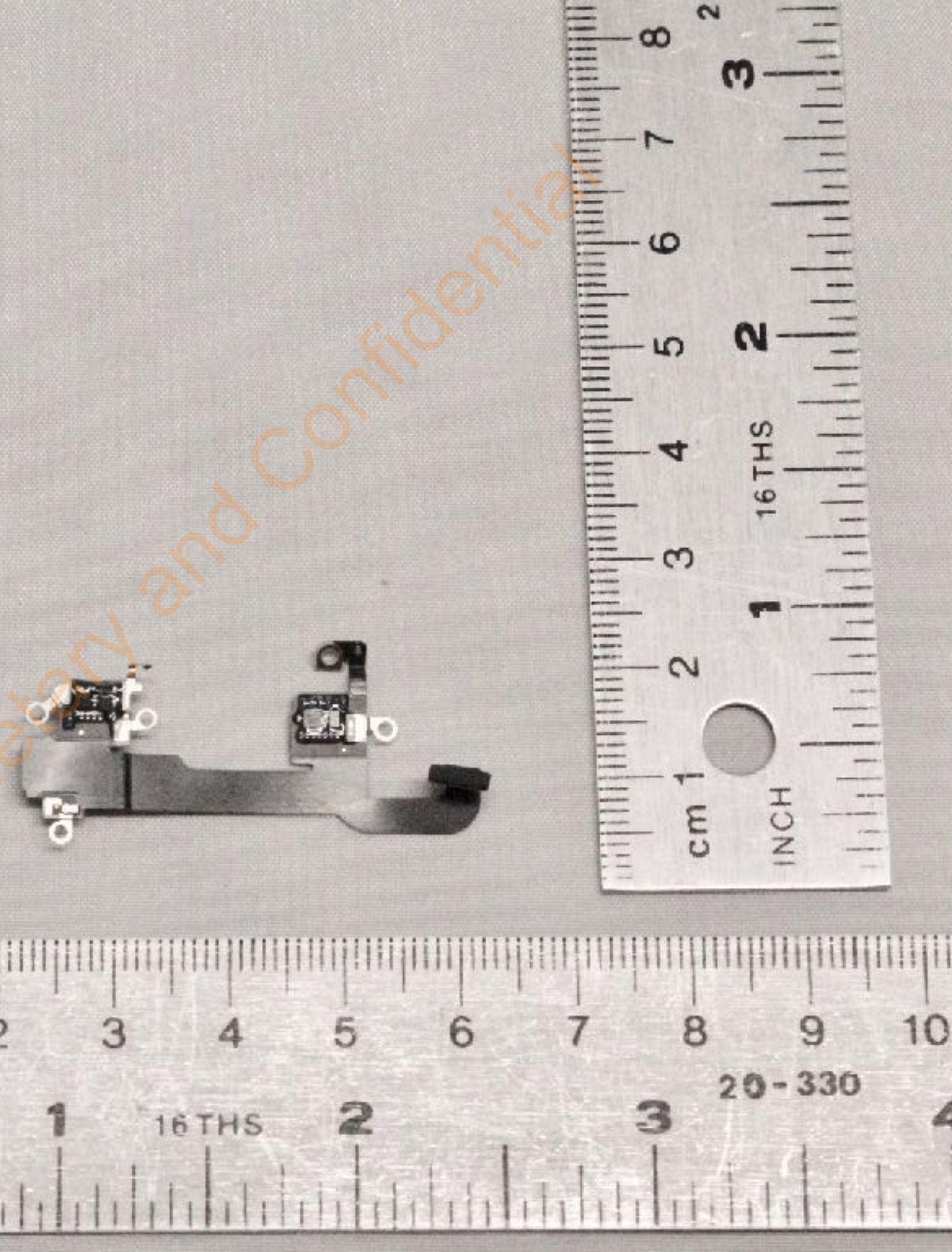

Apple Proprietary and Confidential

A2097

5GHz WiFi/ 3.4GHz cellular and GPS/
NFC/ 2nd cellular antenna feed- Back

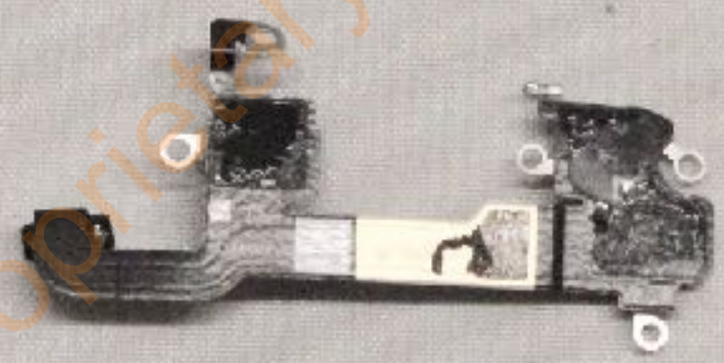

Apple Proprietary and Confidential

A2097
WiFi/BT 2.4GHz and 4th Cellular
Antenna feed- Front

Apple Proprietary and Confidential

A2097
WiFi/BT 2.4GHz and 4th Cellular
Antenna feed- Back

Apple Proprietary and Confidential

A2097
Battery - Front

Apple Proprietary and Confidential

A2097
Battery - Back

Apple Proprietary and Confidential

A2097

MLB with shields - Front

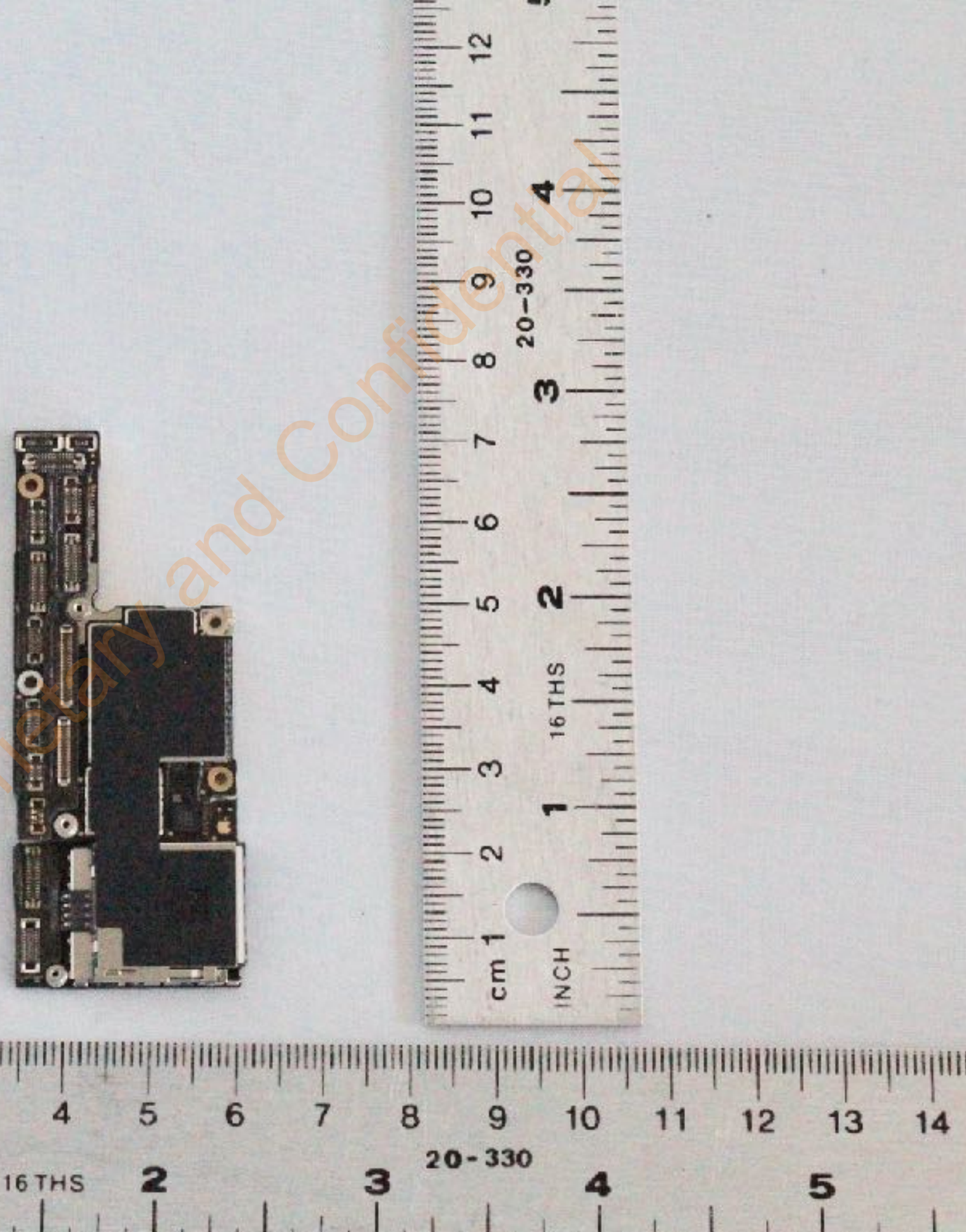

Apple Proprietary and Confidential

A2097
MLB with shields - Back

Apple Proprietary and Confidential

A2097

Bottom MLB without shield - Front

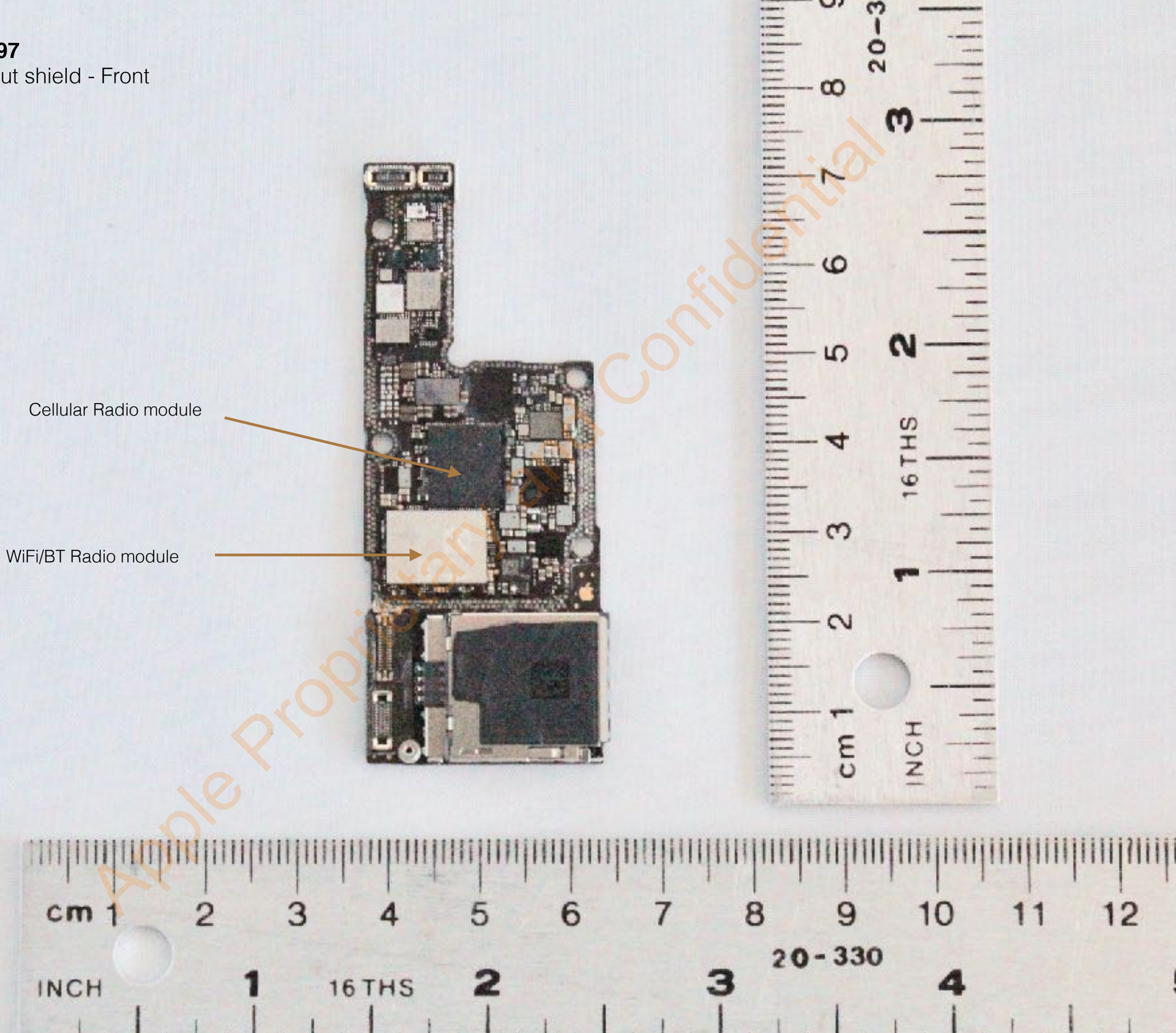

Apple Proprietary Confidential

A2097

Bottom MLB without shield - Back

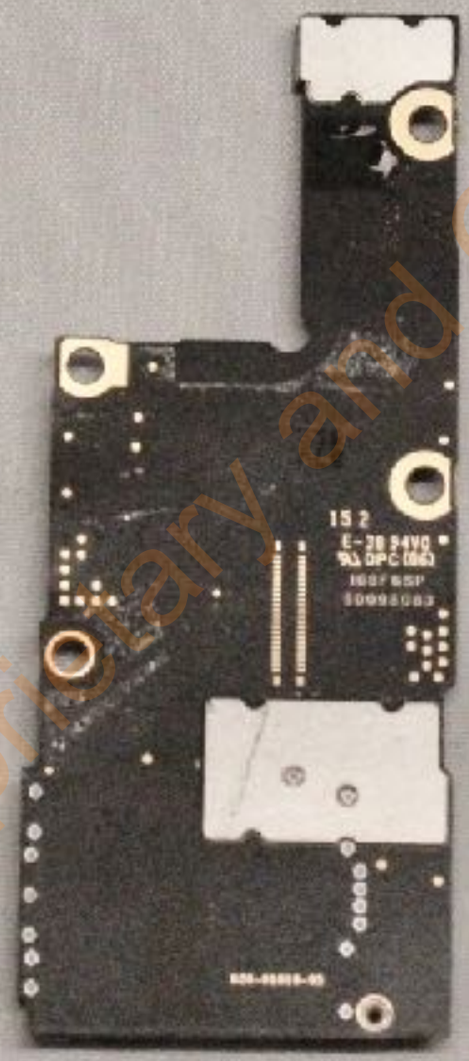

Apple Proprietary and Confidential

A2097

Top MLB without shield - Front

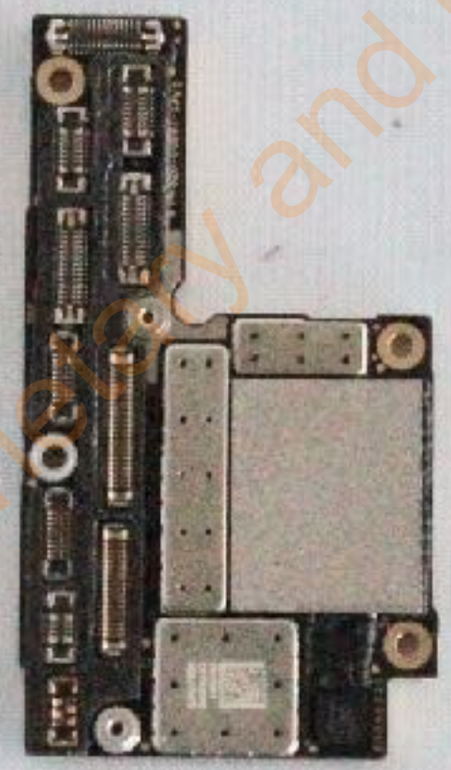

Apple Proprietary and Confidential

A2097

Top MLB without shield - Back

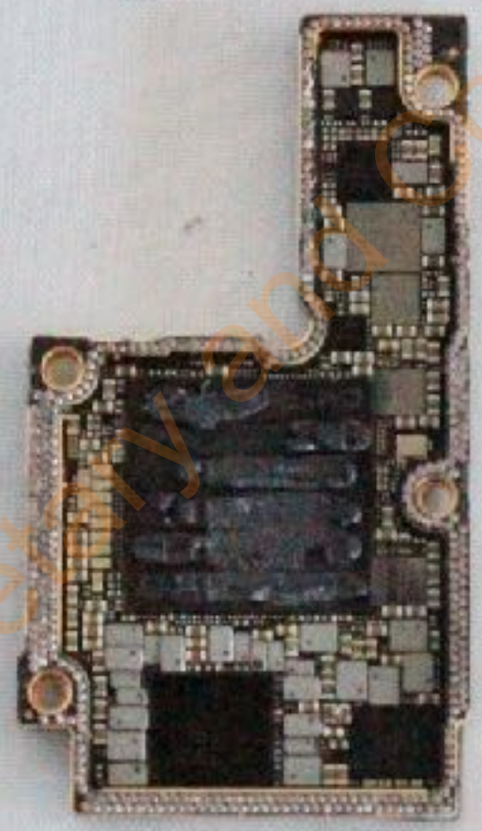

Apple Proprietary and Confidential