A2111, A2222, A2223
LCD and Touch Screen removed

Apple Proprietary and Confidential

A2111, A2222, A2223

LCD/Touch Screen Assembly - Front

Apple Proprietary and Confidential

A2111, A2222, A2223

LCD/Touch Screen Assembly - Back

Apple Proprietary and Confidential

A2111, A2222, A2223

Internal View

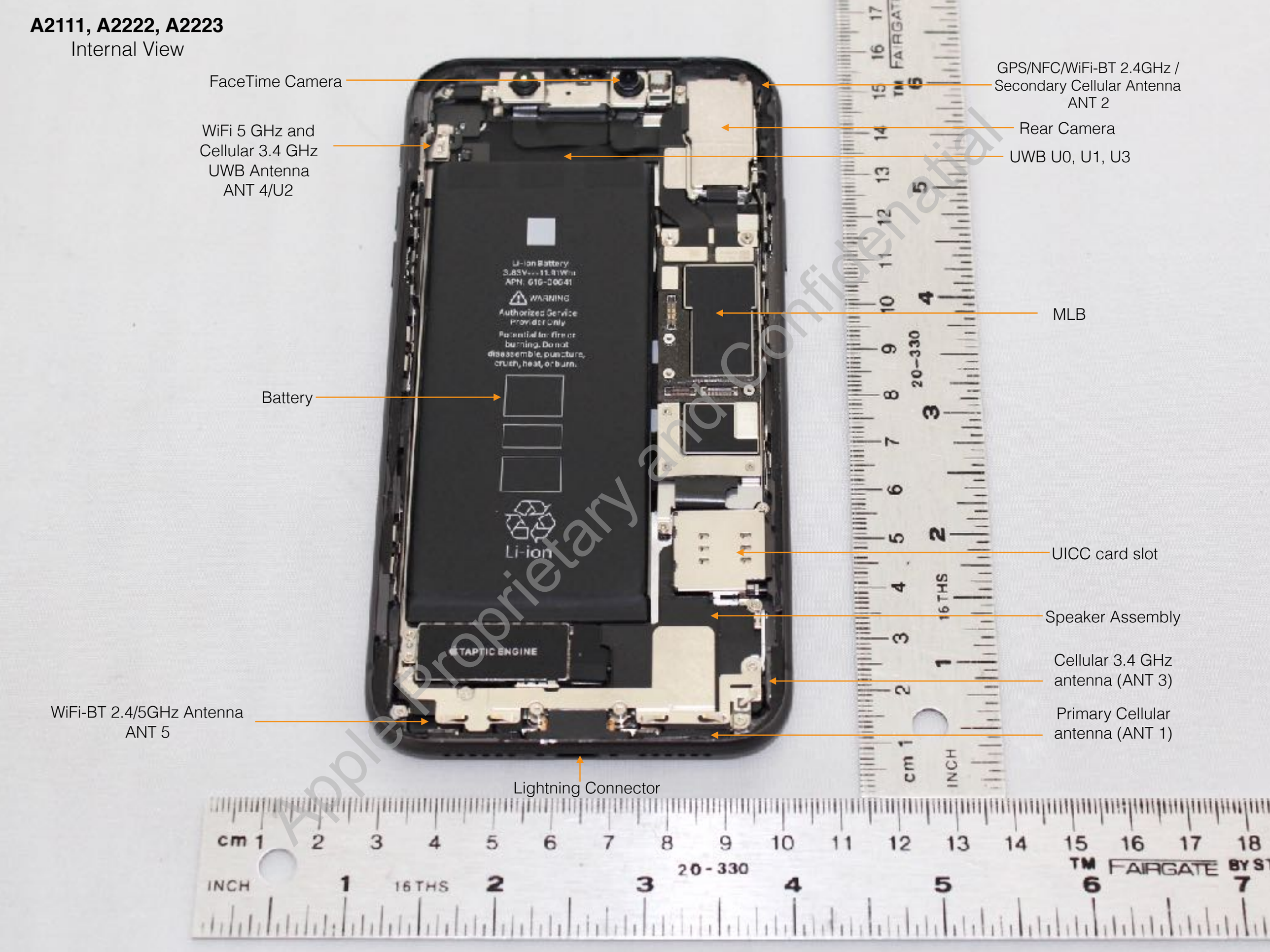

Apple Proprietary and Confidential

A2111, A2222, A2223

Flex assembly with FaceTime camera, Proximity sensor, Earpiece and Microphone - Front

Apple Proprietary and Confidential

A2111, A2222, A2223

Flex assembly with FaceTime camera, Proximity sensor, Earpiece and Microphone - Back

Apple Proprietary and Confidential

A2111, A2222, A2223
Rear camera - Front

Apple Proprietary and Confidential

A2111, A2222, A2223
Rear camera - Back

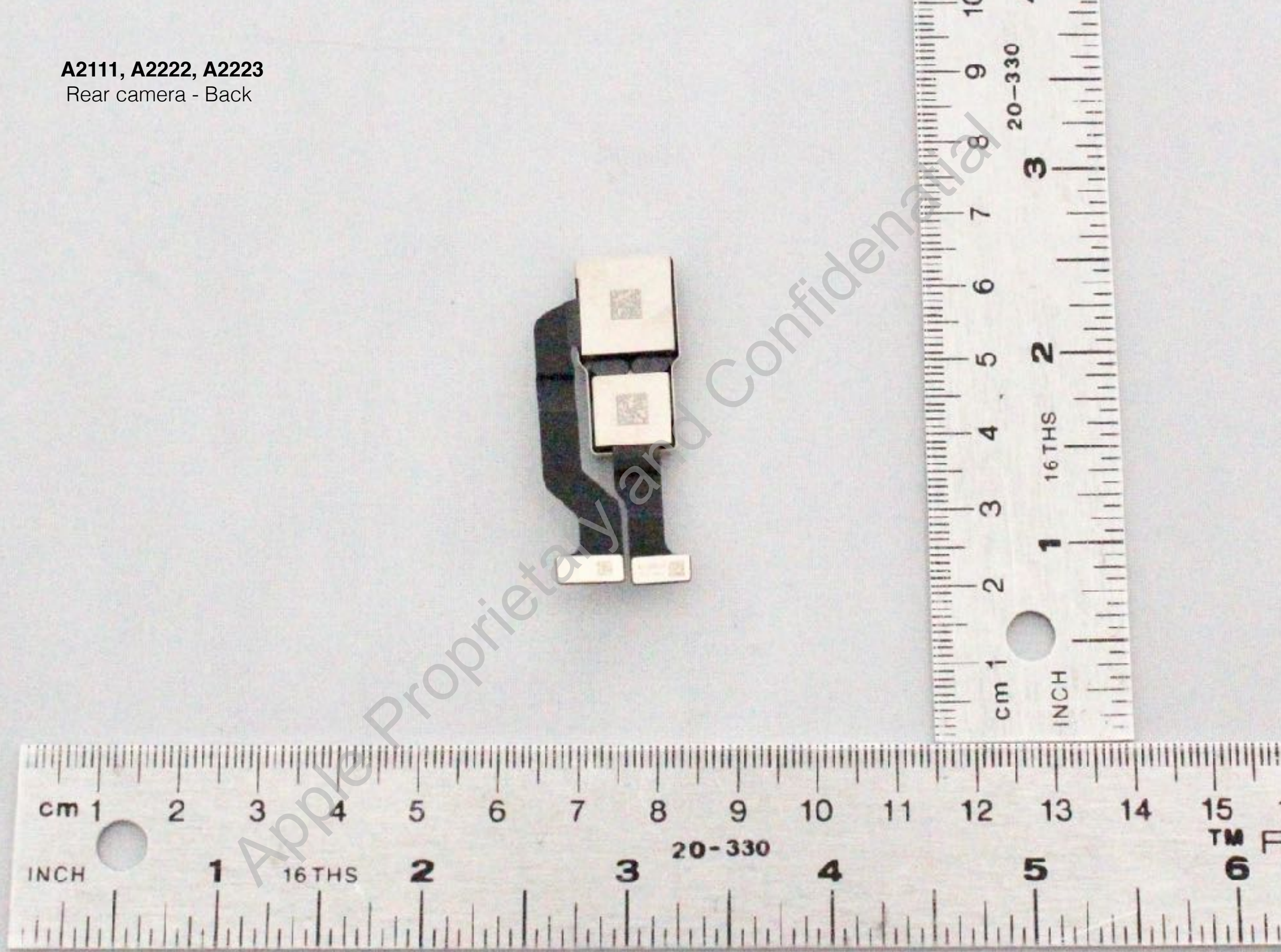

Apple Proprietary and Confidential

A2111, A2222, A2223
Speaker assembly - Front

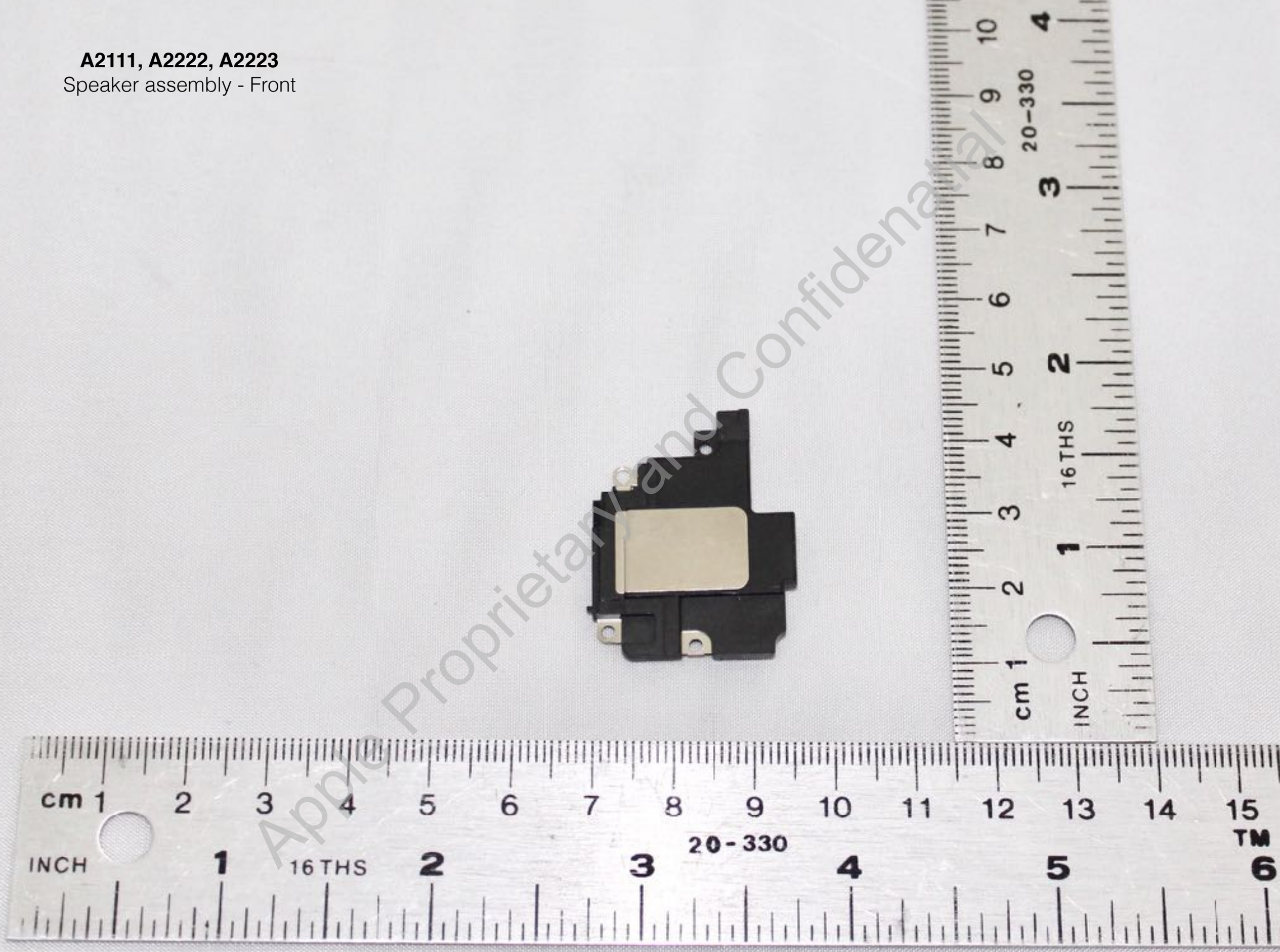

Apple Proprietary and Confidential

A2111, A2222, A2223
Speaker assembly - Back

Apple Proprietary and Confidenatial

A2111, A2222, A2223

Flex assembly with Lightning connector, microphone
Primary Cellular antenna (ANT 1)
Cellular 3.4 GHz antenna (ANT 3)
WiFi-BT 2.4/5GHz Antenna (ANT 5) - Front

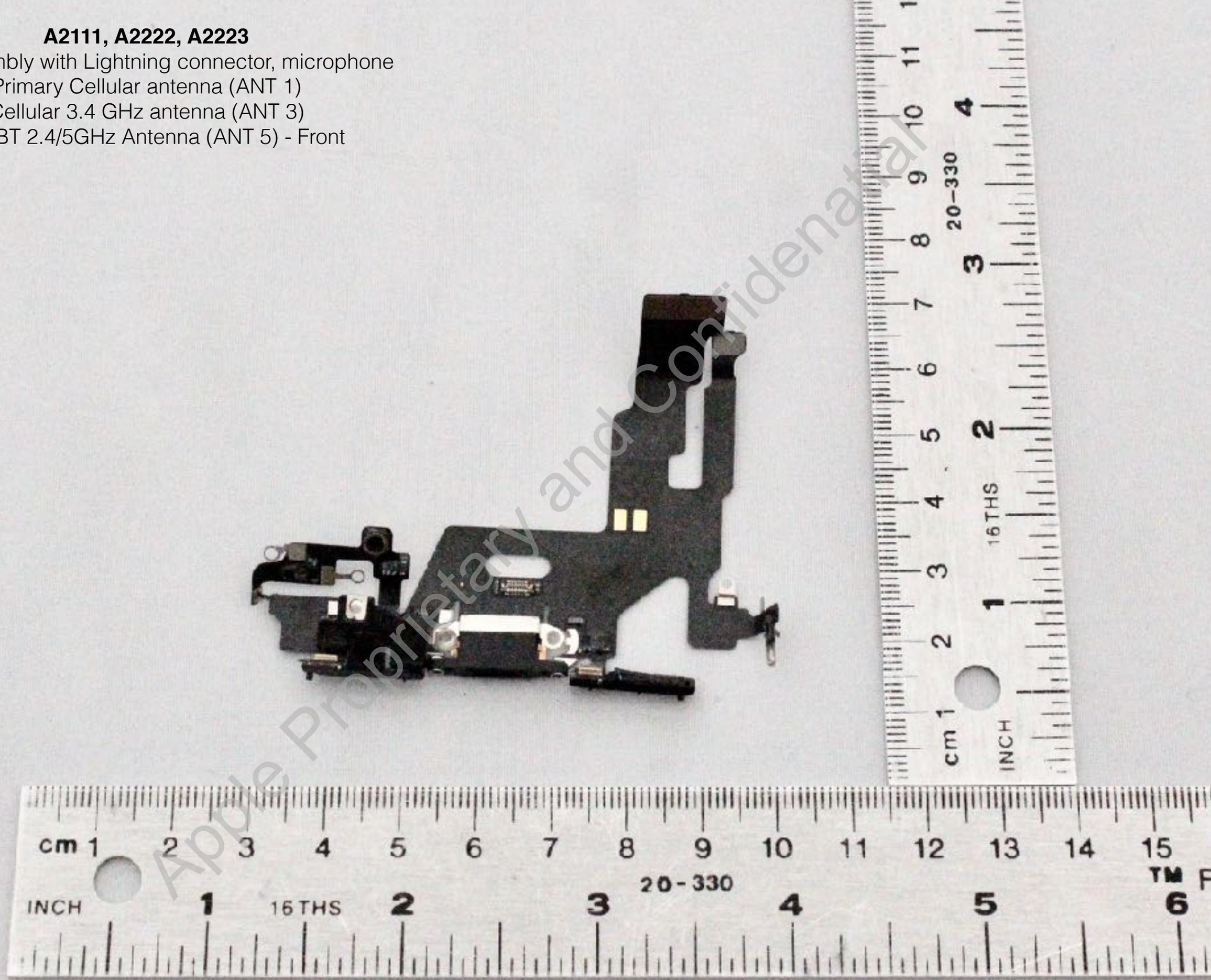

Apple Proprietary and Confidential

A2111, A2222, A2223

Flex assembly with Lightning connector, microphone
Primary Cellular antenna (ANT 1)
Cellular 3.4 GHz antenna (ANT 3)
WiFi-BT 2.4/5GHz Antenna (ANT 5) - Back

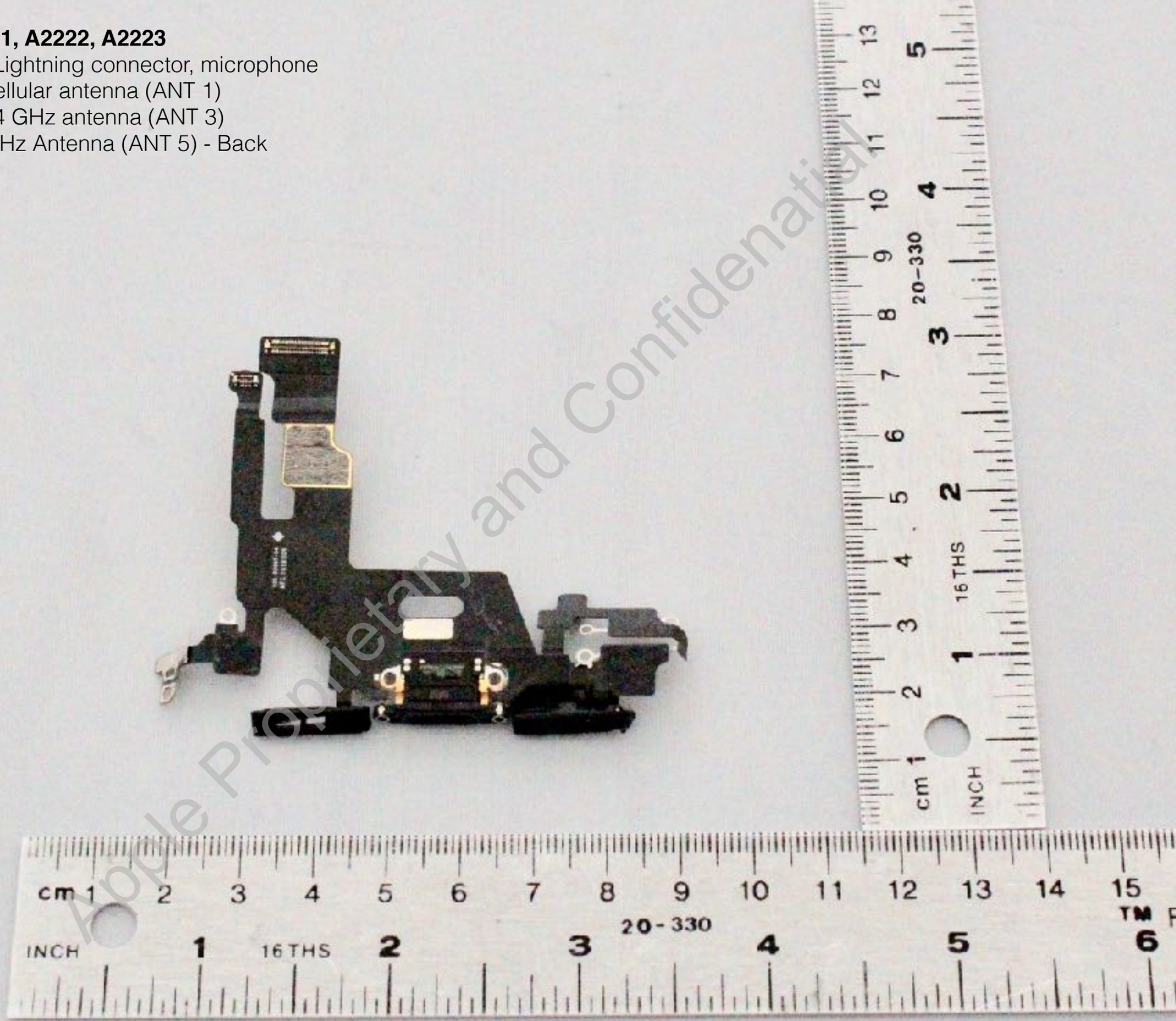

Apple Proprietary and Confidenatial

A2111, A2222, A2223

Flex assembly with WiFi-BT 5GHz/ cellular antenna 3.4 GHz/ UWB(ANT 4/U2)
GPS/NFC/WiFi-BT 2.4GHz / Secondary Cellular Antenna (ANT 2) - Front

Apple Proprietary and Confidential

A2111, A2222, A2223

Flex assembly with WiFi-BT 5GHz/ cellular antenna 3.4 GHz/ UWB(ANT 4/U2)
GPS/NFC/WiFi-BT 2.4GHz / Secondary Cellular Antenna (ANT 2) - Back

Apple Proprietary and Confidential

A2111, A2222, A2223
UWB U0, U1, U3 antenna feed- Front

Apple Proprietary and Confidential

A2111, A2222, A2223
UWB U0, U1, U3 antenna feed- Back

Apple Proprietary and Confidential

A2111, A2222, A2223
Battery - Front

Apple Proprietary and Confidential

A2111, A2222, A2223
Battery - Back

Apple Proprietary and Confidential

A2111, A2222, A2223
MLB BOT INT with shields - Front

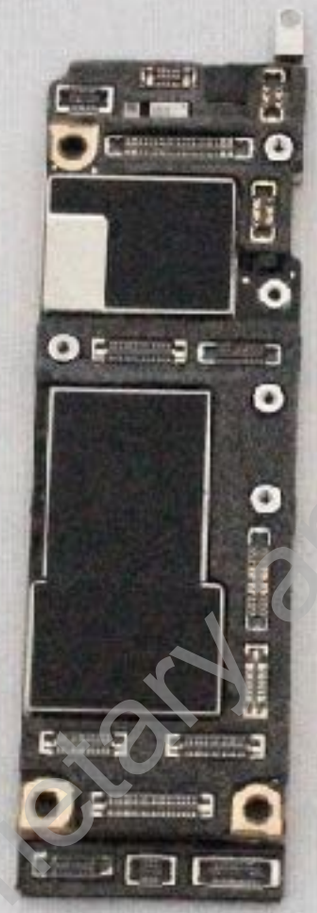

Apple Proprietary and Confidential

A2111, A2222, A2223
MLB BOT INT with shields - Back

Apple Proprietary and Confidential

A2111, A2222, A2223

MLB BOT INT - without shield - Front

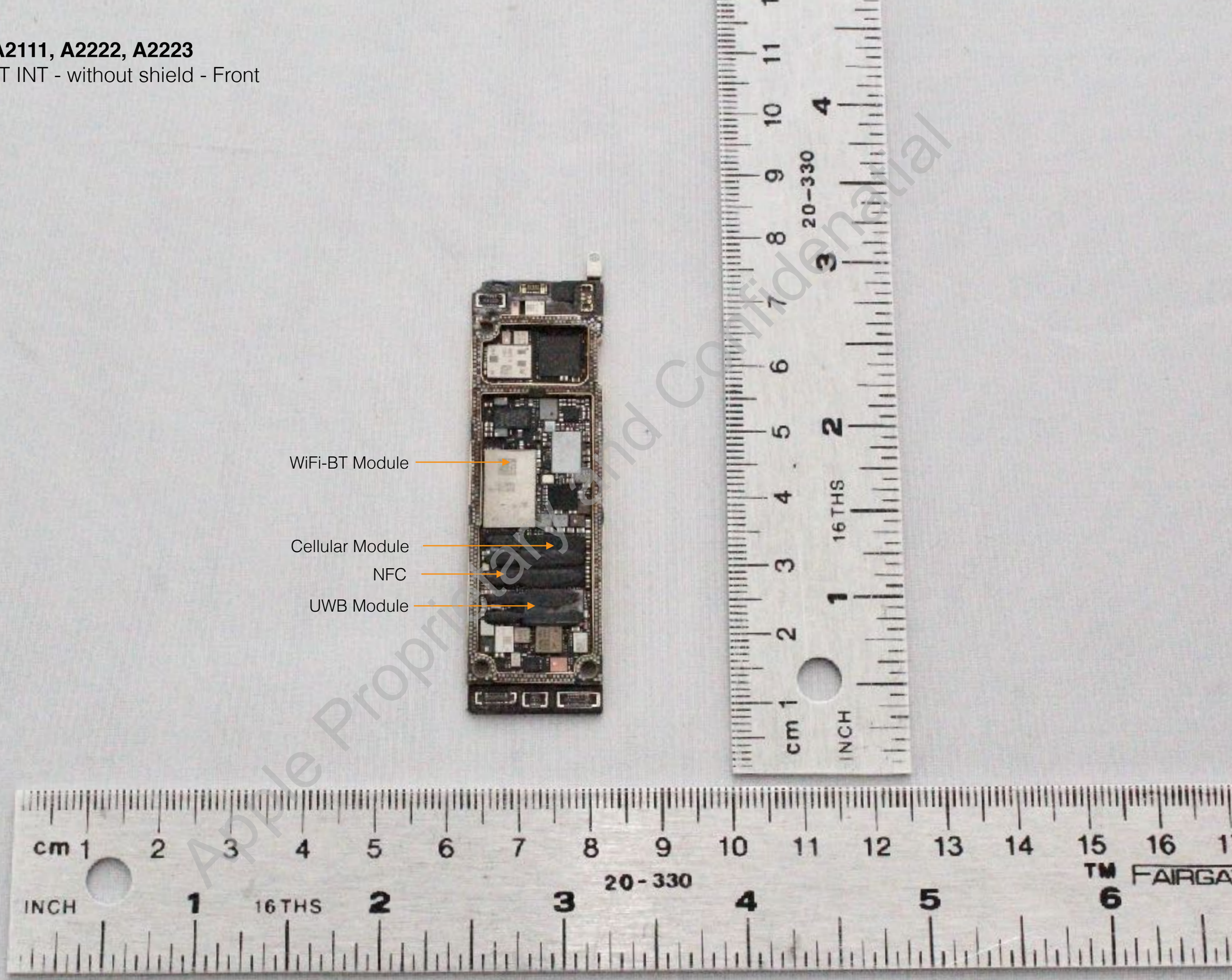

Apple Proprietary and Confidential

A2111, A2222, A2223
MLB TOP - without shield - Front

Apple Proprietary and Confidential

A2111, A2222, A2223
MLB TOP - without shield - Front

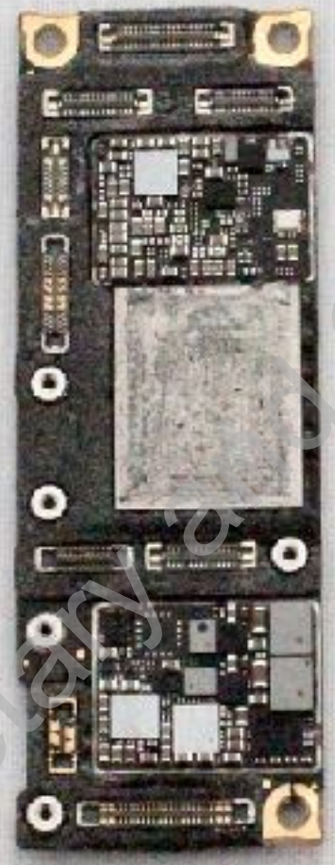

Apple Proprietary Confidential