HAC RF EMISSIONS TEST REPORT

FCC 47 CFR § 20.19
ANSI C63.19-2011

For
SMARTPHONE

FCC ID: BCG-E8152A
Model Name: A2891, A2892

Report Number: 14282061-S3V2
Issue Date: 8/12/2022

Prepared for
APPLE INC.
1 APPLE PARK WAY
CUPERTINO, CA 95014-2084

Prepared by
UL VERIFICATION SERVICES INC.
47173 BENICIA STREET
FREMONT, CA 94538, U.S.A.
TEL: (510) 319-4000
FAX: (510) 661-0888

ACCREDITED
CERT #0751.05

Revision History

Rev.	Date	Revisions	Revised By
V1	7/29/2022	Initial Issue	--
V2	8/12/2022	Removed unsupported bands from §7	Nathan Sousa

This report shall not be reproduced without the written approval of UL Verification Services Inc.

Table of Contents

1. Attestation of Test Results 5

2. Test Methodology 6

3. Facilities and Accreditation 6

4. Calibration and Uncertainty 7

4.1. Measuring Instrument Calibration 7

4.2. Measurement Uncertainty 8

5. System Specifications 9

6. System Validation 10

6.1. System Validation Results 11

7. Average Antenna Input Power & Evaluation for Low-power Exemption 12

7.1. ANT 1 12

7.2. ANT 2 13

7.3. ANT 3 14

7.4. ANT 4 15

7.5. ANT 5 15

7.6. ANT 6 16

7.7. ANT 7 16

7.8. ANT 8 16

7.9. ANT 9 16

8. Device Under Test 17

8.1. Air Interfaces and Operating Mode 18

9. Modulation Interference Factor (MIF) 19

10. HAC RF Emissions Test Procedure 21

11. RF Emissions Measurement Criteria 24

12. HAC (RF Emissions) Test Results 25

12.1. ANT 1 25

12.2. ANT 2 26

12.3. ANT 3 26

12.4. ANT 4 27

12.5. ANT 5 27

12.6. ANT 7 28

12.7. ANT 8 28

12.8. ANT 9 28

This report shall not be reproduced without the written approval of UL Verification Services Inc.

12.9. Worst Case RF Emission Test Plot *29*

Appendixes **30**

Appendix A: RF-E Setup Photo *30*

Appendix B: RF-E System Validation Plots *30*

Appendix C: RF-E Test Plots *30*

Appendix D: RF-E MIF Attestation Letter *30*

Appendix E: RF-E Probe Certificates *30*

Appendix F: RF-E Dipole Certificates *30*

Appendix G: RF-E UID Specifications *30*

This report shall not be reproduced without the written approval of UL Verification Services Inc.

1. Attestation of Test Results

Applicant Name	APPLE, INC.
FCC ID	BCG-E8152A
Model Name	A2891, A2892 Model A2891 was used for Final Testing.
Applicable Standards	FCC 47 CFR § 20.19 ANSI C63.19-2011
HAC Rating	M3
Date Tested	6/3/2022 to 7/12/2022
Test Results	Pass

UL Verification Services Inc. tested the above equipment in accordance with the requirements set forth in the above standards. The test results show that the equipment tested can demonstrate compliance with the requirements as documented in this report.

This report contains data provided by the customer which can impact the validity of results. UL Verification Services Inc. is only responsible for the validity of results after the integration of the data provided by the customer.

The results documented in this report apply only to the tested sample, under the conditions and modes of operation as described herein. It is the manufacturer's responsibility to assure that additional production units of this model are manufactured with identical electrical and mechanical components. All samples tested were in good operating condition throughout the entire test program. Measurement Uncertainties are published for informational purposes only and were not considered unless noted otherwise.

This document may not be altered or revised in any way unless done so by UL Verification Services Inc. and all revisions are duly noted in the revisions section. Any alteration of this document not carried out by UL Verification Services Inc. will constitute fraud and shall nullify the document. This report must not be used by the client to claim product certification, approval, or endorsement by A2LA, NIST, any agency of the Federal Government, or any agency of the U.S. government.

Approved & Released By:	Prepared By:
Devin Chang Senior Test Engineer UL Verification Services Inc.	Coltyce Sanders Staff Laboratory Engineer UL Verification Services Inc.

This report shall not be reproduced without the written approval of UL Verification Services Inc.

2. Test Methodology

The tests documented in this report were performed in accordance with ANSI C63.19-2011 Methods of Measurement of Compatibility between Wireless Communications Devices and Hearing Aids and FCC Published procedure

KDB 285076 D01 HAC Guidance v06
KDB 285076 D03 HAC FAQ v01r05
TCB workshop updates

3. Facilities and Accreditation

The test sites and measurement facilities used to collect data are located at

47173 Benicia Street
SAR Lab 2

UL Verification Services Inc. is accredited by A2LA, Certificate Number 0751.05

This report shall not be reproduced without the written approval of UL Verification Services Inc.

4. Calibration and Uncertainty

4.1. Measuring Instrument Calibration

The measuring equipment utilized to perform the tests documented in this report has been calibrated in accordance with the manufacturer's recommendations, and is traceable to recognized national standards.

Name of Equipment	Manufacturer	Type/Model	Serial No.	Cal. Due Date
Signal Generator	R&S	SMB 100A	180969	2/16/2023
3-Path Diode Power Sensor	R&S	NRP18A	100994	2/19/2023
Power Meter	Keysight	N1911A	MY55196015	1/26/2023
Power Sensor	Agilent	N1921A	MY53260001	1/25/2023
Bi-Directional Coupler	Werlatone	C8060-102	2710	N/A
Data Acquisition Electronics (SAR 2)	SPEAG	DAE4	1434	11/11/2022
E-Field Probe (SAR 2)	SPEAG	EF3DV3	4028	8/13/2022
Calibration Dipole	SPEAG	CD835V3	1014	2/22/2023
Calibration Dipole	SPEAG	CD1880V3	1122	2/22/2023
Calibration Dipole	SPEAG	CD2450V3	1171	1/7/2023
Calibration Dipole	SPEAG	CD2600V3	1014	8/13/2022
Calibration Dipole	SPEAG	CD3500V3	1006	11/10/2022
Calibration Dipole	SPEAG	CD5500V3	1007	4/20/2023

Note(s):

1: According to SPEAG's Technical Report, "MIF Verification", Doc # TR-FB-12.09.04-1, issued date: 9/4/2012. E-field probes are calibrated with specified uncertainty according to ISO 17025 as described in their calibration certificate. The MIF according to the definition in ANSI C63.19 is specific for a modulation and can therefore be used as a constant value if the probe has been PMR calibrated.

This report shall not be reproduced without the written approval of UL Verification Services Inc.

4.2. Measurement Uncertainty

Error Description	Uncertainty value (±%)	Probe Dist.	Div.	(Ci) E	Std. Unc.(±%) E
Measurement System					
Probe Calibration	5.1	N	1	1	5.1
Axial Isotropy	4.7	R	1.732	1	2.7
Sensor Displacement	16.5	R	1.732	1	9.5
Boundary Effects	2.4	R	1.732	1	1.4
Phantom Boundary Effects	7.2	R	1.732	1	4.1
Linearity	4.7	R	1.732	1	2.7
Scaling to PMR Calibration	10.0	R	1.732	1	5.8
System Detection Limit	1.0	R	1.732	1	0.6
Readout Electronics	0.3	N	1	1	0.3
Response Time	0.8	R	1.732	1	0.5
Integration Time	2.6	R	1.732	1	1.5
RF Ambient Conditions	3.0	R	1.732	1	1.7
RF Reflections	12.0	R	1.732	1	6.9
Probe Positioner	1.2	R	1.732	1	0.7
Probe Positioning	4.7	R	1.732	1	2.7
Extrapolation and Interpolation	1.0	R	1.732	1	0.6
Test sample Related					
Test Positioning Vertical	4.7	R	1.732	1	2.7
Test Positioning Lateral	1.0	R	1.732	1	0.6
Device Holder and Phantom	2.4	R	1.732	1	1.4
Power Drift	5.0	R	1.732	1	2.9
Phantom and Setup Related					
Phantom Thickness	2.4	R	1.732	1	1.4
Combined Std. Uncertainty					16.3
Expanded Std. Uncertainty on Power (Coverage Factor for 95%, k = 2)					**32.6**
Expanded Std. Uncertainty on Field					**16.3**

Notesfor table
1. N - Nomal
2. R - Rectangular
3. Div. - Divisor used to obtain standard uncertainty
4. Ci - is te sensitivity coefficient

This report shall not be reproduced without the written approval of UL Verification Services Inc.

5. System Specifications

E-field measurements are performed using the DASY52 automated dosimetric assessment system. The DASY52 is made by Schmid & Partner Engineering AG (SPEAG) in Zurich, Switzerland.

The DASY52 HAC Extension consists of the following parts:

Test Arch Phantom

The specially designed Test Arch allows high precision positioning of both the device and any of the validation dipoles.

EF3DV3 Isotropic E-Field Probe

Construction:	One dipole parallel, two dipoles normal to probe axis Interleaved sensors Built-in shielding against static charges PEEK enclosure material
Calibration:	In air from 100 MHz to 3.0 GHz (absolute accuracy ±6.0%, k=2) ISO/IEC 17025 calibration service available.
Frequency:	40 MHz – >6 GHz (can be extended to < 20 MHz); Linearity: ±0.2 dB (100 MHz – 3 GHz)
Directivity:	± 0.2 dB in air (rotation around probe axis) ± 0.4 dB in air (rotation normal to probe axis)
Dynamic Range:	2 V/m to > 1000 V/m; Linearity: ± 0.2 dB
Dimensions:	Overall length: 337 mm (Tip: 20 mm) Tip diameter: 3.9 mm (Body: 12 mm) Distance from probe tip to dipole centers: 1.5 mm Sensor displacement to probe's calibration point: <0.7 mm
Application:	General near-field measurements up to 6 GHz HAC measurements up to 6 GHz Field component measurements Fast automatic scanning in phantoms

This report shall not be reproduced without the written approval of UL Verification Services Inc.

6. System Validation

The test setup was validated when first configured and verified periodically thereafter to ensure proper function. The procedure provided in this section is a validation procedure using dipole antennas for which the field levels were computed by numeric modeling.

Procedure:

Place a dipole antenna meeting the requirements given in ANSI C63.19 in the normally occupied by the WD.

The dipole antenna serves as a known source for an electrical and magnetic output. Position the E-field probe so that the following occurs:

- The probes and their cables are parallel to the coaxial feed of the dipole antenna
- The probe cables and the coaxial feed of the dipole antenna approach the measurement area from opposite directions
- The center point of the probe element(s) is 15 mm from the closest surface of the dipole elements.

Scan the length of the dipole with the E-field probe and record the two maximum values found near the dipole ends. Average the two readings and compare the reading to the expected value in the calibration certificate or the expected value in this standard.

Setup diagram

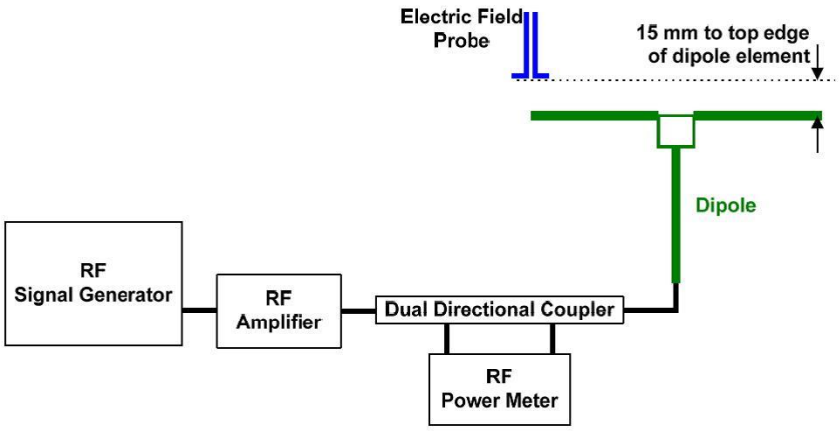

This report shall not be reproduced without the written approval of UL Verification Services Inc.

6.1. System Validation Results

SAR Lab	Date	Dipole Type_Serial #_Freq.	Dipole Cal. Due Data	Max. measured from		Average max. above arm (V/m)	Target (V/m) (From SPEAG)	Deviation (note 1) ± %	Plot No.
				above high end (dBV/m)	above low end (dBV/m)				
2	6/3/2022	CD5500V3_SN:1007_(5500 MHz)	4/20/2023	40.67	40.67	108.02	102.10	**5.80%**	1
2	6/3/2022	CD2450V3_SN:1171_(2450 MHz)	1/7/2023	39.15	39.18	90.83	85.40	**6.36%**	2
2	6/7/2022	CD835V3_SN:1014_(835 MHz)	2/22/2023	40.40	42.11	116.10	110.70	**4.88%**	3
2	6/7/2022	CD1880V3_SN:1122_(1880 MHz)	2/22/2023	39.16	39.60	93.14	86.10	8.18%	
2	6/7/2022	CD2600V3_SN:1014_(2600 MHz)	8/13/2022	39.15	39.20	90.94	85.80	**5.99%**	4
2	6/7/2022	CD3500V3_SN:1006_(3500 MHz)	11/10/2022	38.85	38.89	87.80	83.70	**4.90%**	5
2	6/14/2022	CD1880V3_SN:1122_(1880 MHz)	2/22/2023	39.58	39.38	94.20	86.10	**9.40%**	6
2	7/10/2022	CD2600V3_SN:1014_(2600 MHz)	8/13/2022	39.04	39.19	90.32	85.80	5.26%	

Notes:

1) Delta (Deviation) % = 100 * (Measured value minus Target value) divided by the Target value. Deltas within ±18% are acceptable, of which 12% is deviation and 13% is measurement uncertainty.
2) The maximum E-field or were evaluated and compared to the target values provided by SPEAG in the calibration certificate of specific dipoles.
3) Please refer to the appendix for detailed measurement data and plots.

This report shall not be reproduced without the written approval of UL Verification Services Inc.

7. Average Antenna Input Power & Evaluation for Low-power Exemption

An RF air interface technology of a device is exempt from testing when its average antenna input power plus its **MIF is ≤17 dBm** for any of its operating modes. If a device supports multiple RF air interfaces, each RF air interface shall be evaluated individually.

7.1. ANT 1

Air-Interface	Antenna Input Power (dBm)[1]	Worst Case MIF (dB)	Input Power plus its MIF (dBm)	HAC Tested
GSM850	33.50	3.63	37.13	Yes
GSM1900	32.00	3.63	35.63	Yes
W-CDMA Band II	25.70	-27.23	-1.53	No
W-CDMA Band IV	25.70	-27.23	-1.53	No
W-CDMA Band V	25.70	-27.23	-1.53	No
LTE Band 2	25.70	-9.76	15.94	No
LTE Band 4	25.70	-9.76	15.94	No
LTE Band 5	25.70	-9.76	15.94	No
LTE Band 7	25.70	-9.76	15.94	No
LTE Band 12	25.70	-9.76	15.94	No
LTE Band 13	25.70	-9.76	15.94	No
LTE Band 17	25.70	-9.76	15.94	No
LTE Band 25	25.70	-9.76	15.94	No
LTE Band 26	25.70	-9.76	15.94	No
LTE Band 30	25.60	-9.76	15.84	No
LTE Band 41 (PC3)	25.70	-1.44	24.26	Yes
LTE Band 41 (PC2)	28.70	-1.44	27.26	Yes
LTE Band 66	25.70	-9.76	15.94	No
5G NR Band n2	25.70	-15.06	10.64	No
5G NR Band n5	25.70	-15.06	10.64	No
5G NR Band n7	25.70	-15.06	10.64	No
5G NR Band n12	25.70	-15.06	10.64	No
5G NR Band n25	25.70	-15.06	10.64	No
5G NR Band n26	25.70	-15.06	10.64	No
5G NR Band n30	25.60	-15.06	10.54	No
5G NR Band n41 (PC3)	25.70	-16.69	9.01	No
5G NR Band n41 (PC2)	28.70	-16.69	12.01	No
5G NR Band n66	25.70	-15.06	10.64	No
5G NR Band n70	25.70	-15.06	10.64	No

Notes:

1. Testing for all UL CA is not required because it uses same Tx band, modulations, and output power is equal or less than non-CA modes.

This report shall not be reproduced without the written approval of UL Verification Services Inc.

7.2. ANT 2

Air-Interface	Antenna Input Power (dBm)[1]	Worst Case MIF (dB)	Input Power plus its MIF (dBm)	HAC Tested
GSM850	32.50	3.63	36.13	Yes
GSM1900	29.50	3.63	33.13	Yes
W-CDMA Band II	23.40	-27.23	-3.83	No
W-CDMA Band IV	23.40	-27.23	-3.83	No
W-CDMA Band V	24.70	-27.23	-2.53	No
LTE Band 2	23.40	-9.76	13.64	No
LTE Band 4	25.70	-9.76	15.94	No
LTE Band 5	24.70	-9.76	14.94	No
LTE Band 7	23.70	-9.76	13.94	No
LTE Band 12	24.70	-9.76	14.94	No
LTE Band 13	24.70	-9.76	14.94	No
LTE Band 17	24.70	-9.76	14.94	No
LTE Band 25	23.40	-9.76	13.64	No
LTE Band 26	24.70	-9.76	14.94	No
LTE Band 30	23.70	-9.76	13.94	No
LTE Band 41 (PC3)	25.70	-1.44	24.26	Yes
LTE Band 41 (PC2)	28.70	-1.44	27.26	Yes
LTE Band 66	25.70	-9.76	15.94	No
5G NR Band n2	23.40	-15.06	8.34	No
5G NR Band n5	24.70	-15.06	9.64	No
5G NR Band n7	23.70	-15.06	8.64	No
5G NR Band n12	24.70	-15.06	9.64	No
5G NR Band n25	23.40	-15.06	8.34	No
5G NR Band n26	24.70	-15.06	9.64	No
5G NR Band n30	23.70	-15.06	8.64	No
5G NR Band n41 (PC3)	25.70	-16.69	9.01	No
5G NR Band n41 (PC2)	28.70	-16.69	12.01	No
5G NR Band n66	25.70	-15.06	10.64	No
5G NR Band n70	25.70	-15.06	10.64	No

Notes:

1. Testing for all UL CA is not required because it uses same Tx band, modulations, and output power is equal or less than non-CA modes.

This report shall not be reproduced without the written approval of UL Verification Services Inc.

7.3. ANT 3

Air-Interface	Antenna Input Power (dBm)[1]	Worst Case MIF (dB)	Input Power plus its MIF (dBm)	HAC Tested
GSM1900	31.50	3.63	35.13	Yes
W-CDMA Band II	25.50	-27.23	-1.73	No
W-CDMA Band IV	25.50	-27.23	-1.73	No
LTE Band 2	25.50	-9.76	15.74	No
LTE Band 4	25.50	-9.76	15.74	No
LTE Band 7	25.00	-9.76	15.24	No
LTE Band 25	25.50	-9.76	15.74	No
LTE Band 30	23.60	-9.76	13.84	No
LTE Band 41 (PC3)	25.70	-1.44	24.26	Yes
LTE Band 41 (PC2)	28.00	-1.44	26.56	Yes
LTE Band 66	25.50	-9.76	15.74	No
5G NR Band n2	25.50	-15.06	10.44	No
5G NR Band n7	25.00	-15.06	9.94	No
5G NR Band n25	25.50	-15.06	10.44	No
5G NR Band n30	23.60	-15.06	8.54	No
5G NR Band n41 (PC3)	25.70	-16.69	9.01	No
5G NR Band n41 (PC2)	28.00	-16.69	11.31	No
5G NR Band n66	25.50	-15.06	10.44	No
5G NR Band n70	25.50	-15.06	10.44	No
802.11b (2.4 GHz)	21.50	-2.02	19.48	Yes
802.11g (2.4 GHz)	21.50	0.12	21.62	Yes
802.11ax (2.4 GHz)	21.50	-5.58	15.92	No

Notes:

1. Testing for all UL CA is not required because it uses same Tx band, modulations, and output power is equal or less than non-CA modes.

This report shall not be reproduced without the written approval of UL Verification Services Inc.

7.4. ANT 4

Air-Interface	Antenna Input Power (dBm)[1]	Worst Case MIF (dB)	Input Power plus its MIF (dBm)	HAC Tested
GSM1900	29.00	3.63	32.63	Yes
W-CDMA Band II	23.40	-27.23	-3.83	No
W-CDMA Band IV	23.40	-27.23	-3.83	No
LTE Band 2	23.40	-9.76	13.64	No
LTE Band 4	25.20	-9.76	15.44	No
LTE Band 7	23.20	-9.76	13.44	No
LTE Band 25	23.40	-9.76	13.64	No
LTE Band 30	23.20	-9.76	13.44	No
LTE Band 41 (PC3)	25.70	-1.44	24.26	Yes
LTE Band 41 (PC2)	27.70	-1.44	26.26	Yes
LTE Band 48	25.50	-1.44	24.06	Yes
LTE Band 66	25.20	-9.76	15.44	No
5G NR Band n2	23.40	-15.06	8.34	No
5G NR Band n7	23.20	-15.06	8.14	No
5G NR Band n25	23.40	-15.06	8.34	No
5G NR Band n30	23.20	-15.06	8.14	No
5G NR Band n41 (PC3)	25.70	-16.69	9.01	No
5G NR Band n41 (PC2)	27.70	-16.69	11.01	No
5G NR Band n66	25.20	-15.06	10.14	No
5G NR Band n70	25.20	-15.06	10.14	No
5G NR Band 77 (PC3)	25.50	-16.69	8.81	No
5G NR Band 77 (PC2)	25.50	-16.69	8.81	No
802.11b (2.4 GHz)	19.75	-2.02	17.73	Yes
802.11g (2.4 GHz)	19.75	0.12	19.87	Yes
802.11ax (2.4 GHz)	19.75	-5.58	14.17	No

Notes:

1. Testing for all UL CA is not required because it uses same Tx band, modulations, and output power is equal or less than non-CA modes.

7.5. ANT 5

Air-Interface	Antenna Input Power (dBm)[1]	Worst Case MIF (dB)	Input Power plus its MIF (dBm)	HAC Tested
802.11a/n/ac (U-NII-1)	20.50	-3.15	17.35	Yes
802.11a/n/ac (U-NII-2A)	20.50	-3.15	17.35	Yes
802.11a/n/ac (U-NII-2C)	20.50	-3.15	17.35	Yes
802.11a/n/ac (U-NII-3)	21.50	-3.15	18.35	Yes
802.11ax (U-NII-1)	20.50	-5.58	14.92	No
802.11ax (U-NII-2A)	20.50	-5.58	14.92	No
802.11ax (U-NII-2C)	20.50	-5.58	14.92	No
802.11ax (U-NII-3)	21.50	-5.58	15.92	No

This report shall not be reproduced without the written approval of UL Verification Services Inc.

7.6. ANT 6

Air-Interface	Antenna Input Power (dBm)[1]	Worst Case MIF (dB)	Input Power plus its MIF (dBm)	HAC Tested
802.11a/n/ac (U-NII-1)	18.75	-3.15	15.6	No
802.11a/n/ac (U-NII-2A)	18.75	-3.15	15.6	No
802.11a/n/ac (U-NII-2C)	18.75	-3.15	15.6	No
802.11a/n/ac (U-NII-3)	20.00	-3.15	16.85	No
802.11ax (U-NII-1)	18.75	-5.58	13.17	No
802.11ax (U-NII-2A)	18.75	-5.58	13.17	No
802.11ax (U-NII-2C)	18.75	-5.58	13.17	No
802.11ax (U-NII-3)	20.00	-5.58	14.42	No

7.7. ANT 7

Air-Interface	Antenna Input Power (dBm)[1]	Worst Case MIF (dB)	Input Power plus its MIF (dBm)	HAC Tested
LTE Band 48	25.40	-1.44	23.96	Yes
5G NR Band n77 (PC3)	25.70	-16.69	9.01	No
5G NR Band n77 (PC2)	28.70	-16.69	12.01	No

Notes:
Testing for all UL CA is not required because it uses same Tx band, modulations, and output power is equal or less than non-CA modes.

7.8. ANT 8

Air-Interface	Antenna Input Power (dBm)[1]	Worst Case MIF (dB)	Input Power plus its MIF (dBm)	HAC Tested
LTE Band 48	25.60	-1.44	24.16	Yes
5G NR Band n77 (PC3)	25.70	-16.69	9.01	No
5G NR Band n77 (PC2)	26.00	-16.69	9.31	No

Notes:
Testing for all UL CA is not required because it uses same Tx band, modulations, and output power is equal or less than non-CA modes.

7.9. ANT 9

Air-Interface	Antenna Input Power (dBm)[1]	Worst Case MIF (dB)	Input Power plus its MIF (dBm)	HAC Tested
LTE Band 48	24.30	-1.44	22.86	Yes
5G NR Band n77 (PC3)	25.70	-16.69	9.01	No
5G NR Band n77 (PC2)	28.70	-16.69	12.01	No

Notes:
Testing for all UL CA is not required because it uses same Tx band, modulations, and output power is equal or less than non-CA modes.

This report shall not be reproduced without the written approval of UL Verification Services Inc.

8. Device Under Test

The Apple iPhone is a smartphone with multimedia functions (music, application support, and video), cellular GSM, GPRS, EGPRS, UMTS, LTE, 5G, IEEE 802.11a/b/g/n/ac/ax, Bluetooth, Ultra-Wideband, GPS, NFC and MSS. All models except reference model support at least one UICC based SIM. The second SIM is either an UICC based p-SIM (physical SIM) or e-SIM (electronic SIM). The device supports a built-in inductive charging transmitter and receiver. The rechargeable battery is not user accessible.

All Models have the same PCB layout, circuit design, common components, antennas and antenna locations. Their cellular modem, Wi-Fi, BT, NFC, WPT, UWB and MSS transmitters are identical.

There are three vendors of the Wi-Fi/Bluetooth radio modules: variant 1, 2 and 3. The Wi-Fi/BT radio modules have the same mechanical outline (e.g., the same package dimension and pin-out layout), use the same on-board antenna matching circuit, have an identical antenna structure, and are built and tested to conform to the same specifications and to operate within the same tolerances. It is confirmed that Variant 1 represents the worst case.

Normal operation	Held to head
Back Cover	Normal Battery Cover

This report shall not be reproduced without the written approval of UL Verification Services Inc.

8.1. Air Interfaces and Operating Mode

Air Interface	Bands (MHz)	Type	C63.19 Tested	Simultaneous Transmitter	Name of Voice Service	Power Reduction
GSM	850	VO	Yes	Wi-Fi, BT	CMRS	N/A
	1900					No
	GPRS/EDGE	DT/VD	No[1]	Wi-Fi, BT	FaceTime	N/A
W-CDMA (UMTS)	850	VO	No[1]	Wi-Fi, BT	CMRS	N/A
	1700					
	1900					
	HSPA	VD	No[1]	Wi-Fi, BT	FaceTime	N/A
LTE - FDD	700 (B12/13/17)	VD	No[1]	Wi-Fi, BT	FaceTime	N/A
	850 (B5/26)					
	1700 (B4/66)					
	1900 (B2/25)					
	2300 (B30)					
	2600 (B7)					
LTE - TDD	2600 (B41)	VD	Yes	Wi-Fi, BT	FaceTime	N/A
	3600 (B48)					
5G NR(FR1) FDD	700 (n12)	VD	No[1]	Wi-Fi, BT	FaceTime	N/A
	850 (n5/26)					
	1700 (n66/70)					
	1900 (n2/n25)					
	2300 (n30)					
	2600 (n7)					
5G NR(FR1) TDD	2600 (n41)	VD	No[1]	Wi-Fi, BT	FaceTime	N/A
	3700 (n77)					
Wi-Fi	2450	VD	Yes	WWAN	FaceTime	N/A
	5200 (U-NII-1)			WWAN & BT		
	5300 (U-NII-2A)					
	5500 (U-NII-2C)					
	5800 (U-NII-3)					
BT	2450	DT	N/A	WWAN, Wi-Fi (5 GHz bands)	N/A	N/A

Type
VO: Legacy Cellular Voice Service
DT: Digital Transport only (no voice)
VD: IP Voice Service over Digital Transport
CMRS: Commercial Mobile Radio Service

Note:
1. Evaluated for MIF and low power exemption.

This report shall not be reproduced without the written approval of UL Verification Services Inc.

9. Modulation Interference Factor (MIF)

The HAC Standard ANSI C63.19 defines a new scaling using the Modulation Interference Factor (MIF) which replaces the need for the Articulation Weighting Factor (AWF) during the evaluation and is applicable to any modulation scheme.

The Modulation Interference factor (MIF, in dB) is added to the measured average E-field (in dBV/m) and converts it to the RF Audio Interference level (in dBV/m). This level considers the audible amplitude modulation components in the RF E-field. CW fields without amplitude modulation are assumed to not interfere with the hearing aid electronics. Modulations without time slots and low fluctuations at low frequencies have low MIF values, TDMA modulations with narrow transmission and repetition rates of few 100 Hz have high MIF values and give similar classifications as ANSI C63.19.

Definitions

E-field probes have a bandwidth <10 kHz and can therefore not evaluate the RF envelope in the full audio band. DASY52 is therefore using the "indirect" measurement method according to ANSI C63.19 which is the primary method. These near field probes read the averaged E-field measurement. Especially for the new high peak-to-average (PAR) signal types, the probes shall be linearized by probe modulation response (PMR) calibration in order to not overestimate the field reading.

The evaluation method or the MIF is defined in ANSI C63.19 section D.7. An RMS demodulated RF signal is fed to a spectral filter (similar to an A weighting filter) and forwarded to a temporal filter acting as a quasi-peak detector. The averaged output of these filtering is called to a 1 kHz 80% AM signal as reference. MIF measurement requires additional instrumentation and is not well suited for evaluation by the end user with reasonable uncertainty It may alternatively be determined through analysis and simulation, because it is constraint and characteristic for a communication signal. DASY52 uses well defined signals for PMR calibration. The MIF of these signals has been determined by simulation and is automatically applied.

MIF values were not tested by a probe or as specified in the standards but are based on analysis provided by SPEAG for all the air interfaces (GSM, WCDMA, LTE, and Wi-Fi). The data included in this report are for the worst-case operating modes. The UIDs used are listed below:

UID	Communication System Name	MIF (dB)
10021-DAC	GSM-FDD (TDMA, GMSK)	3.63
10011-CAB	UMTS-FDD (WCDMA)	-27.23
10170-CAE	LTE-FDD (SC-FDMA, 1 RB, 20 MHz, 16QAM)	-9.76
10182-CAE	LTE-FDD (SC-FDMA, 1 RB, 15 MHz, 16QAM)	-9.76
10176-CAG	LTE-FDD (SC-FDMA, 1 RB, 10 MHz, 16QAM)	-9.76
10173-CAG	LTE-TDD (SC-FDMA, 1 RB, 20 MHz, 16QAM)	-1.44
10235-CAG	LTE-TDD (SC-FDMA, 1 RB, 10 MHz, 16QAM)	-1.44
10061-CAB	IEEE 802.11b WiFi 2.4 GHz (DSSS, 11 Mbps)	-2.02
10077-CAB	IEEE 802.11g WiFi 2.4 GHz (DSSS/OFDM, 54 Mbps)	0.12
10069-CAD	IEEE 802.11a/n WiFi 5 GHz (OFDM, 54 Mbps)	-3.15
10671-AAC	IEEE 802.11ax (20MHz, MCS0, 90pc duty cycle)	-5.58
10866-AAD	5G NR (DFT-s-OFDM, 1 RB, 100 MHz, QPSK, 30 kHz)	-16.69
10898-AAB	5G NR (DFT-s-OFDM, 1 RB, 10 MHz, QPSK, 30 kHz)	-16.68
10903-AAB	5G NR (DFT-s-OFDM, 1 RB, 40 MHz, QPSK, 30 kHz)	-16.68
10929-AAC	5G NR (DFT-s-OFDM, 1 RB, 10 MHz, QPSK, 15 kHz)	-15.06
10930-AAC	5G NR (DFT-s-OFDM, 1 RB, 15 MHz, QPSK, 15 kHz)	-15.06
10931-AAC	5G NR (DFT-s-OFDM, 1 RB, 20 MHz, QPSK, 15 kHz)	-15.06
10934-AAC	5G NR (DFT-s-OFDM, 1 RB, 40 MHz, QPSK, 15 kHz)	-15.07

This report shall not be reproduced without the written approval of UL Verification Services Inc.

A PMR calibrated probe is linearized for the selected waveform over the full dynamic range within the uncertainty specified in its calibration certificate. E-field probes have a bandwidth <10 kHz and can therefore not evaluate the RF envelope in the full audio band. DASY52 is therefore using the \indirect" measurement method according to ANSI C63.19 which is the primary method. These near field probes read the averaged E-field measurement. Especially for the new high peak-to-average (PAR) signal types, the probes shall be linearized by PMR calibration in order to not overestimate the field reading.

The MIF measurement uncertainty is estimated as follows, for modulation frequencies from slotted waveforms with fundamental frequency and at least 2 harmonics within 10 kHz:

- *0.2 dB for MIF -7 to +5 dB,*
- *0.5 dB for MIF -13 to +11 dB*
- *1 dB for MIF > -20 dB*

This report shall not be reproduced without the written approval of UL Verification Services Inc.

10. HAC RF Emissions Test Procedure

The following are step-by-step test procedures.

a) Confirm proper operation of the field probe, probe measurement system and other instrumentation and the positioning system.

b) Position the WD in its intended test position.

c) Set the WD to transmit a fixed and repeatable combination of signal power and modulation characteristic that is representative of the worst case (highest interference potential) encountered in normal use. Transiently occurring start-up, changeover, or termination conditions, or other operations likely to occur less than 1% of the time during normal operation, may be excluded from consideration.

d) The center sub-grid shall be centered on the T-Coil mode perpendicular measurement point or the acoustic output, as appropriate. Locate the field probe at the initial test position in the 50 mm by 50 mm grid, which is contained in the measurement plane, refer to illustrated in Figure 1. If the field alignment method is used, align the probe for maximum field reception.

e) Record the reading at the output of the measurement system

f) Scan the entire 50 mm by 50 mm region in equally spaced increments and record the reading at each measurement point. The distance between measurement points shall be sufficient to assure the identification of the maximum reading.

g) Identify the five contiguous sub-grids around the center sub-grid whose maximum reading is the lowest of all available choices. This eliminates the three sub-grids with the maximum readings. Thus, the six areas to be used to determine the WD's highest emissions are identified.

h) Identify the maximum reading within the non-excluded sub-grids identified in step g).

i) Convert the highest field reading within identified in step h) to RF audio interference level, in V/m, by taking the square root of the reading and then dividing it by the measurement system transfer function, established in 5.5.1.1 Convert this result to dB(V/m) by taking the base-10 logarithm and multiplying by 20.

   Indirect measurement method

   Replacing step i), the RF audio interference level in dB (V/m) is obtained by adding the MIF (in dB) to the maximum steady-state rms field-strength reading, in dB (V/m), from step h). Use this result to determine the category rating

j) Compare this RF audio interference level with the categories in Clause 8 (ANSI C63.19) and record the resulting WD category rating

k) For the T-Coil mode M-rating assessment, determine whether the chosen perpendicular measurement point is contained in an included sub-grid of the first scan. If so, then a second scan is not necessary. The first scan and resultant category rating may be used for the T-Coil mode M rating.

   Otherwise, repeat step a) through step i), with the grid shifted so that it is centered on the perpendicular measurement point. Record the WD category rating.

This report shall not be reproduced without the written approval of UL Verification Services Inc.

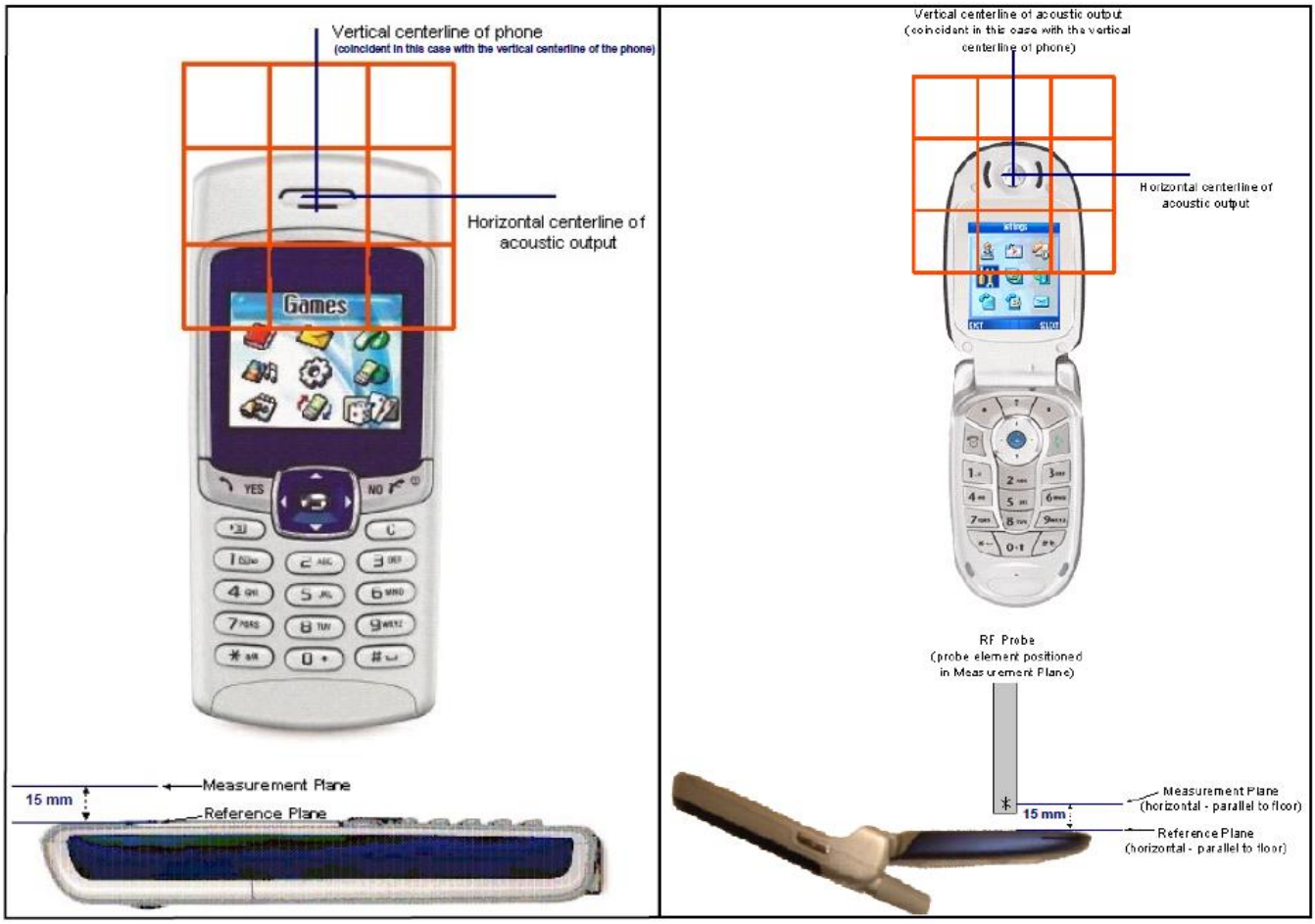

Figure 1 - WD reference and plane for RF emission measurements

This report shall not be reproduced without the written approval of UL Verification Services Inc.

Test flowchart Per ANSI-63.19-2011

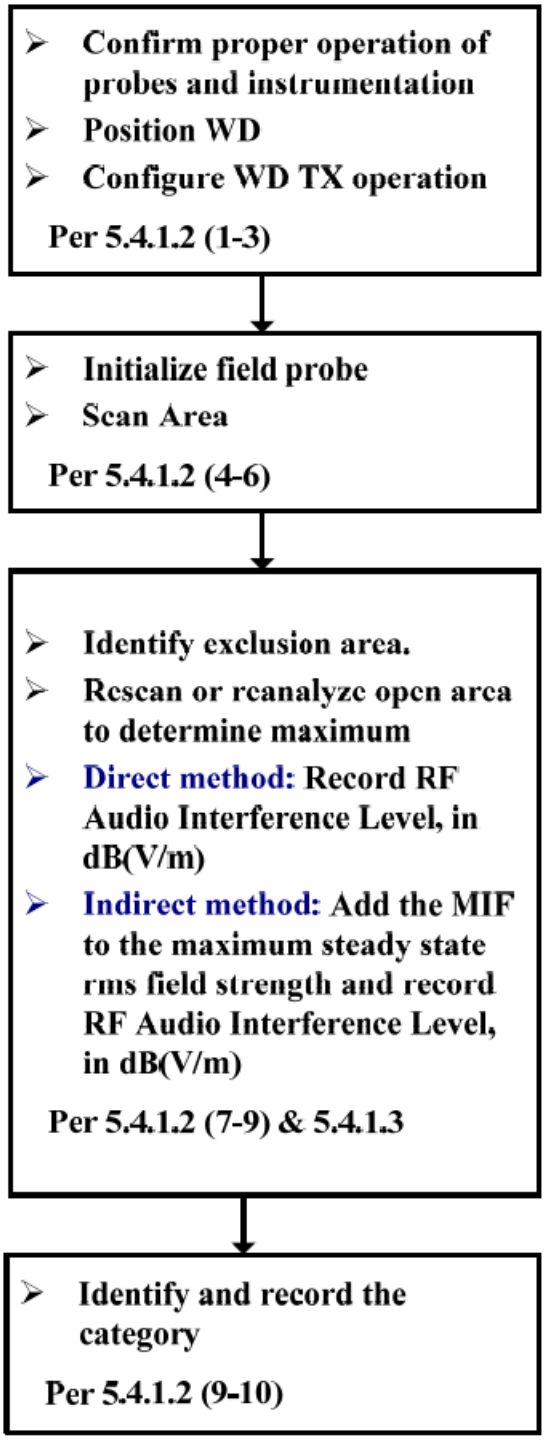

This report shall not be reproduced without the written approval of UL Verification Services Inc.

11. RF Emissions Measurement Criteria

WD RF audio interference level caterories in logarithmic units

Emission Categories	E-field emissions	
	< 960 MHz	> 960 MHz
Category M1	50 to 55 dB (V/m)	40 to 45 dB (V/m)
Category M2	45 to 50 dB (V/m)	35 to 40 dB (V/m)
Category M3	40 to 45 dB (V/m)	30 to 35 dB (V/m)
Category M4	<40 dB (V/m)	<30 dB (V/m)

This report shall not be reproduced without the written approval of UL Verification Services Inc.

12. HAC (RF Emissions) Test Results

MIF values were not tested by a probe or as specified in the standards but are based on analysis provided by SPEAG for the following User Identifiers and air interfaces.

The data included in this report are for the worst-case operating modes. Refer to Appendix D and G for the MIF vales that represent the worst-case operation modes.

Refer to Section 7 Evaluation for Low-power Exemption. RF Emission testing for this device is required only for GSM, LTE-TDD, 5G NR (FR1), Wi-Fi and Bluetooth. All other applicable air-interfaces are exempt from testing in accordance with C63.19 Clause 4.4 and are rated M4.

12.1. ANT 1

Antenna	Air-Interface	Ch. No.	Freq. (MHz)	Results* (dB V/m)	Results plus 0.2dB uncertaninty (dB V/m)	Margin (dB)	M-Rating	Plot No.
1	GSM 850	128	824.4	28.98	29.18	10.82	M4	1
		190	836.6	28.66	28.86	11.14	M4	2
		251	848.6	28.67	28.87	11.13	M4	3
1	GSM 1900	512	1850.2	26.65	26.85	3.15	M4	4
		661	1880.0	27.56	27.76	2.24	M4	5
		810	1909.8	27.50	27.70	2.30	M4	6
1	LTE-TDD Band 41 (PC3)	39750	2506.0	18.99	19.19	10.81	M4	7
		40185	2549.5	19.01	19.21	10.79	M4	8
		40620	2593.0	19.13	19.33	10.67	M4	9
		41055	2636.5	20.64	20.84	9.16	M4	10
		41490	2680.0	20.48	20.68	9.32	M4	11
1	LTE-TDD Band 41 (PC2)	39750	2506.0	20.09	20.29	9.71	M4	12
		40185	2549.5	20.51	20.71	9.29	M4	13
		40620	2593.0	20.07	20.27	9.73	M4	14
		41055	2636.5	21.78	21.98	8.02	M4	15
		41490	2680.0	21.24	21.44	8.56	M4	16

Note(s):

*: Measured Audio Interference level in dB (V/m): indirect method (max rms field strength Plus MIF)

This report shall not be reproduced without the written approval of UL Verification Services Inc.

12.2. ANT 2

Antenna	Air-Interface	Ch. No.	Freq. (MHz)	Results* (dB V/m)	Results plus 0.2dB uncertaninty (dB V/m)	Margin (dB)	M-Rating	Plot No.
2	GSM 850	128	824.4	39.45	39.65	0.35	M4	17
		190	836.6	40.37	40.57	4.43	M3	18
		251	848.6	40.90	41.10	3.90	M3	19
2	GSM 1900	512	1850.2	28.53	28.73	1.27	M4	20
		661	1880.0	28.00	28.20	1.80	M4	21
		810	1909.8	27.59	27.79	2.21	M4	22
2	LTE-TDD Band 41 (PC3)	39750	2506.0	31.36	31.56	3.44	M3	23
		40185	2549.5	32.48	32.68	2.32	M3	24
		40620	2593.0	32.67	32.87	2.13	M3	25
		41055	2636.5	32.89	33.09	1.91	M3	26
		41490	2680.0	32.91	33.11	1.89	M3	27
2	LTE-TDD Band 41 (PC2)	39750	2506.0	32.86	33.06	1.94	M3	28
		40185	2549.5	33.81	34.01	0.99	M3	29
		40620	2593.0	33.83	34.03	0.97	M3	30
		41055	2636.5	34.12	34.32	0.68	M3	31
		41490	2680.0	34.03	34.23	0.77	M3	32

Note(s):

- *: Measured Audio Interference level in dB (V/m): indirect method (max rms field strength Plus MIF)

12.3. ANT 3

Antenna	Air-Interface	Ch. No.	Freq. (MHz)	Results* (dB V/m)	Results plus 0.2dB uncertaninty (dB V/m)	Margin (dB)	M-Rating	Plot No.
3	GSM 1900	512	1850.2	30.17	30.37	4.63	M3	33
		661	1880.0	29.36	29.56	0.44	M4	34
		810	1909.8	30.33	30.53	4.47	M3	35
3	LTE-TDD Band 41 (PC3)	39750	2506.0	26.79	26.99	3.01	M4	36
		40185	2549.5	26.18	26.38	3.62	M4	37
		40620	2593.0	25.05	25.25	4.75	M4	38
		41055	2636.5	23.80	24.00	6.00	M4	39
		41490	2680.0	22.33	22.53	7.47	M4	40
3	LTE-TDD Band 41 (PC2)	39750	2506.0	26.90	27.10	2.90	M4	41
		40185	2549.5	27.36	27.56	2.44	M4	42
		40620	2593.0	26.16	26.36	3.64	M4	43
		41055	2636.5	24.94	25.14	4.86	M4	44
		41490	2680.0	23.97	24.17	5.83	M4	45
3	802.11b	2	2417.0	16.15	16.35	13.65	M4	46
		6	2437.0	16.47	16.67	13.33	M4	47
		11	2462.0	17.28	17.48	12.52	M4	48
3	802.11g	3	2422.0	15.78	15.98	14.02	M4	49
		6	2437.0	18.31	18.51	11.49	M4	50
		9	2452.0	18.78	18.98	11.02	M4	51

Note(s):

*: Measured Audio Interference level in dB (V/m): indirect method (max rms field strength Plus MIF)

This report shall not be reproduced without the written approval of UL Verification Services Inc.

12.4. ANT 4

Antenna	Air-Interface	Ch. No.	Freq. (MHz)	Results* (dB V/m)	Results plus 0.2dB uncertaninty (dB V/m)	Margin (dB)	M-Rating	Plot No.
4	GSM 1900	512	1850.2	29.78	29.98	0.02	M4	52
		661	1880.0	30.06	30.26	4.74	M3	53
		810	1909.8	29.94	30.14	4.86	M3	54
4	LTE-TDD Band 41 (PC3)	39750	2506.0	24.06	24.26	5.74	M4	55
		40185	2549.5	24.54	24.74	5.26	M4	56
		40620	2593.0	23.73	23.93	6.07	M4	57
		41055	2636.5	23.25	23.45	6.55	M4	58
		41490	2680.0	23.29	23.49	6.51	M4	59
4	LTE-TDD Band 41 (PC2)	39750	2506.0	25.78	25.98	4.02	M4	60
		40185	2549.5	26.10	26.30	3.70	M4	61
		40620	2593.0	25.90	26.10	3.90	M4	62
		41055	2636.5	25.74	25.94	4.06	M4	63
		41490	2680.0	25.77	25.97	4.03	M4	64
4	LTE-TDD Band 48 (PC3)	55340	3560.0	28.23	28.43	1.57	M4	65
		55773	3603.0	27.04	27.24	2.76	M4	66
		56207	3646.7	26.99	27.19	2.81	M4	67
		56640	3690.0	28.15	28.35	1.65	M4	68
4	802.11b	2	2417.0	27.04	27.24	2.76	M4	69
		6	2437.0	25.89	26.09	3.91	M4	70
		11	2462.0	25.55	25.75	4.25	M4	71
4	802.11g	3	2422.0	27.70	27.90	2.10	M4	72
		6	2437.0	27.28	27.48	2.52	M4	73
		9	2452.0	28.06	28.26	1.74	M4	74

Note(s):

- *: Measured Audio Interference level in dB (V/m): indirect method (max rms field strength Plus MIF)

12.5. ANT 5

Antenna	Air-Interface	Ch. No.	Freq. (MHz)	Results* (dB V/m)	Results plus 0.2dB uncertaninty (dB V/m)	Margin (dB)	M-Rating	Plot No.
5	802.11a (5.2 GHz)	40	5200.0	17.41	17.61	12.39	M4	75
		44	5220.0	17.62	17.82	12.18	M4	76
		48	5240.0	17.83	18.03	11.97	M4	77
5	802.11a (5.3 GHz)	52	5260.0	17.77	17.97	12.03	M4	78
		56	5280.0	17.89	18.09	11.91	M4	79
		60	5300.0	14.54	14.74	15.26	M4	80
5	802.11a (5.6 GHz)	104	5520.0	16.38	16.58	13.42	M4	81
		124	5620.0	16.76	16.96	13.04	M4	82
		144	5720.0	15.76	15.96	14.04	M4	83
5	802.11a (5.8 GHz)	149	5745.0	15.93	16.13	13.87	M4	84
		157	5785.0	15.41	15.61	14.39	M4	85
		165	5825.0	14.63	14.83	15.17	M4	86

Note(s):

*: Measured Audio Interference level in dB (V/m): indirect method (max rms field strength Plus MIF)

This report shall not be reproduced without the written approval of UL Verification Services Inc.

12.6. ANT 7

Antenna	Air-Interface	Ch. No.	Freq. (MHz)	Results* (dB V/m)	Results plus 0.2dB uncertaninty (dB V/m)	Margin (dB)	M-Rating	Plot No.
7	LTE-TDD Band 48 (PC3)	55340	3560.0	21.14	21.34	8.66	M4	87
		55773	3603.0	20.87	21.07	8.93	M4	88
		56207	3646.7	20.63	20.83	9.17	M4	89
		56640	3690.0	20.61	20.81	9.19	M4	90

Note(s):

*: Measured Audio Interference level in dB (V/m): indirect method (max rms field strength Plus MIF)

12.7. ANT 8

Antenna	Air-Interface	Ch. No.	Freq. (MHz)	Results* (dB V/m)	Results plus 0.2dB uncertaninty (dB V/m)	Margin (dB)	M-Rating	Plot No.
8	LTE-TDD Band 48 (PC3)	55340	3560.0	30.34	30.54	4.46	M3	91
		55773	3603.0	30.83	31.03	3.97	M3	92
		56207	3646.7	30.19	30.39	4.61	M3	93
		56640	3690.0	29.59	29.79	0.21	M4	94

Note(s):

*: Measured Audio Interference level in dB (V/m): indirect method (max rms field strength Plus MIF)

12.8. ANT 9

Antenna	Air-Interface	Ch. No.	Freq. (MHz)	Results* (dB V/m)	Results plus 0.2dB uncertaninty (dB V/m)	Margin (dB)	M-Rating	Plot No.
9	LTE-TDD Band 48 (PC3)	55340	3560.0	20.19	20.39	9.61	M4	95
		55773	3603.0	20.75	20.95	9.05	M4	96
		56207	3646.7	19.64	19.84	10.16	M4	97
		56640	3690.0	18.74	18.94	11.06	M4	98

Note(s):

*: Measured Audio Interference level in dB (V/m): indirect method (max rms field strength Plus MIF)

This report shall not be reproduced without the written approval of UL Verification Services Inc.

12.9. Worst Case RF Emission Test Plot

Test Laboratory: UL Verification Services Inc. SAR Lab 2 Date/Time: 7/12/2022 10:20:24 PM

HAC-RF Emission ANT2

Communication System: UID 10173 - CAG, LTE-TDD (SC-FDMA, 1 RB, 20 MHz, 16-QAM); Frequency: 2636.5 MHz; Duty Cycle: 1:8.87156
Phantom section: RF Section
DASY5 Configuration:
- Probe: EF3DV3 - SN4028; ConvF(1, 1, 1) @ 2636.5 MHz; Calibrated: 8/13/2021
- Sensor-Surface: (Fix Surface)
- Electronics: DAE4 Sn1434; Calibrated: 11/11/2021
- Phantom: HAC Test Arch with AMCC; Type: SD HAC P01 BB
- Measurement SW: DASY52, Version 52.10 (4);SEMCAD X Version 14.6.14 (7495)

LTE Band 41_Power Class 2 E-Field measurement/SC-FDMA RB 1/49 20 MHz 16QAM Ch. 41055/Hearing Aid Compatibility Test (101x101x1): Interpolated grid: dx=0.5000 mm, dy=0.5000 mm

Device Reference Point: 0, 0, -6.3 mm
Reference Value = 72.82 V/m; Power Drift = -0.09 dB
Applied MIF = -1.44 dB
RF audio interference level = 34.12 dBV/m
Emission category: M3

MIF scaled E-field

Grid 1 **M3** **33.64 dBV/m**	Grid 2 **M3** **34.31 dBV/m**	Grid 3 **M3** **31.93 dBV/m**
Grid 4 **M3** **33.37 dBV/m**	Grid 5 **M3** **34.12 dBV/m**	Grid 6 **M3** **31.64 dBV/m**
Grid 7 **M4** **27.26 dBV/m**	Grid 8 **M4** **29.17 dBV/m**	Grid 9 **M4** **29 dBV/m**

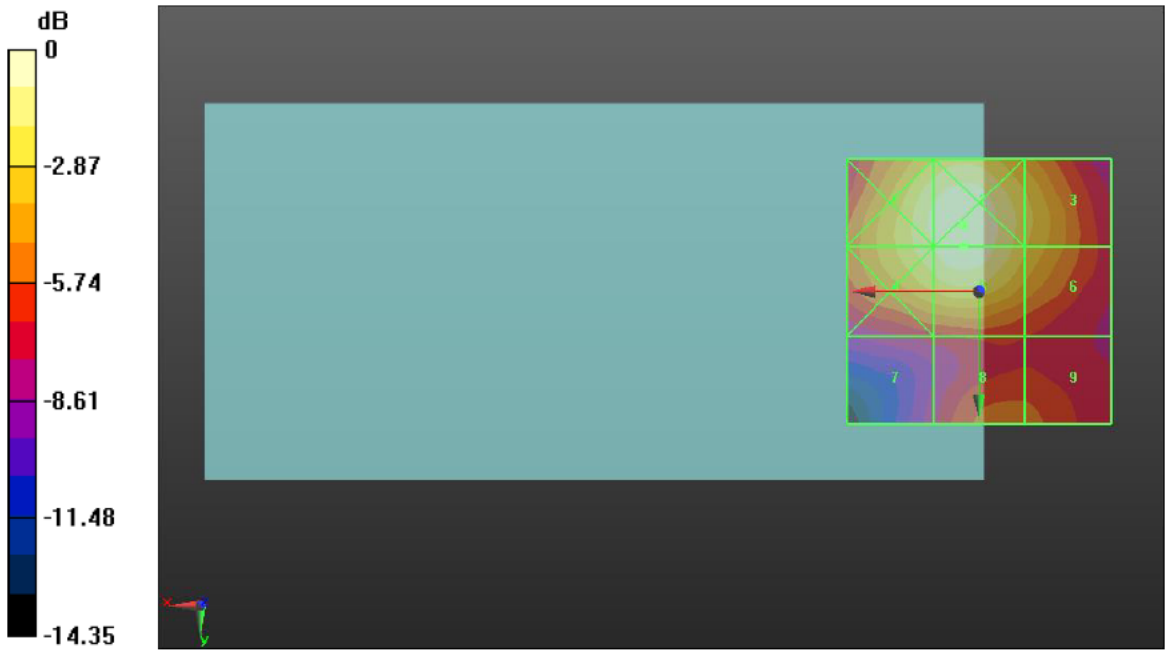

0 dB = 51.94 V/m = 34.31 dBV/m

This report shall not be reproduced without the written approval of UL Verification Services Inc.

Appendixes

Refer to separated files for the following appendixes

Appendix A: RF-E Setup Photo

Appendix B: RF-E System Validation Plots

Appendix C: RF-E Test Plots

Appendix D: RF-E MIF Attestation Letter

Appendix E: RF-E Probe Certificates

Appendix F: RF-E Dipole Certificates

Appendix G: RF-E UID Specifications

END OF REPORT

This report shall not be reproduced without the written approval of UL Verification Services Inc.