HAC T-COIL SIGNAL TEST REPORT

FCC 47 CFR § 20.19
ANSI C63.19-2011

For
SMARTPHONE

FCC ID: BCG-E8429A
Model Name: A3090

Report Number: 14523763-S2V2
Issue Date: 8/3/2023

Prepared for
APPLE INC.
1 APPLE PARK WAY
CUPERTINO, CA 95014-2084

Prepared by
UL VERIFICATION SERVICES INC.
47173 BENICIA STREET
FREMONT, CA 94538, U.S.A.
TEL: (510) 319-4000
FAX: (510) 661-0888

ACCREDITED
CERT #0751.05

Revision History

Rev.	Date	Revisions	Revised By
V1	7/27/2023	Initial Issue	--
V2	8/3/2023	Section 8.1: Removed n79	Kiara Davis

This report shall not be reproduced without the written approval of UL Verification Services Inc.

Table of Contents

1. Attestation of Test Results 5

2. Test Methodology 6

3. Facilities and Accreditation 6

4. Calibration and Uncertainty 6

4.1. Measuring Instrument Calibration 6

4.2. Measurement Uncertainty 7

5. Test Procedures for all Technologies 8

5.1. General Procedures C63.19-2011, §7 8

5.2. Voice over Wi-Fi (VoWiFi) 9

5.3. Over the Top (OTT) 10

6. Audio Level and Gain Measurements 12

6.1. GSM/W-CDMA and VoLTE 12

6.2. VoWi-Fi 13

6.3. Over the Top (OTT) 14

7. T-coil Measurement Criteria 15

7.1. Frequency Response 15

7.2. Signal to Noise 16

8. Device Under Test 17

8.1. Air Interfaces and Operating Mode 18

9. Investigations (Antenna, Codec, & Air Interface) 19

9.1. CMRS 20

9.1.1. Antenna Investigation 20

9.1.2. Codec Investigation 21

9.1.3. Air Interface Investigation 22

9.1.4. VoWi-Fi Codec Investigation 24

9.1.5. VoWi-Fi Air Interface Investigation 25

9.2. OTT Application 27

9.2.1. Antenna Investigation 27

9.2.2. Codec Investigation 28

9.2.3. Air Interface Investigation 29

10. HAC (T-coil) Test Results 34

10.1. CMRS 34

10.2. OTT Application 38

This report shall not be reproduced without the written approval of UL Verification Services Inc.

10.3. Worst Case T-Coil Test Plot.....42

Appendix.....**43**

Appendix A: T-Coil Setup Photo.....43

Appendix B: T-Coil Test Plots (CMRS).....43

Appendix C: T-Coil Test Plots (OTT).....43

Appendix D: T-Coil Probe Certificates.....43

Appendix E: Adjusted Gain Procedure.....43

This report shall not be reproduced without the written approval of UL Verification Services Inc.

1. Attestation of Test Results

Applicant Name	APPLE, INC.
FCC ID	BCG-E8429A
Model Name	A3090
Applicable Standards	FCC 47 CFR § 20.19 ANSI C63.19-2011
HAC Rating	T4
Date Tested	5/5/2023 to 7/27/2023
Test Results	Pass

UL Verification Services Inc. tested the above equipment in accordance with the requirements set forth in the above standards. The test results show that the equipment tested can demonstrate compliance with the requirements as documented in this report.

This report contains data provided by the customer which can impact the validity of results. UL Verification Services Inc. is only responsible for the validity of results after the integration of the data provided by the customer.

The results documented in this report apply only to the tested sample, under the conditions and modes of operation as described herein. It is the manufacturer's responsibility to assure that additional production units of this model are manufactured with identical electrical and mechanical components. All samples tested were in good operating condition throughout the entire test program. Measurement Uncertainties are published for informational purposes only and were not considered unless noted otherwise.

This document may not be altered or revised in any way unless done so by UL Verification Services Inc. and all revisions are noted in the revisions section. Any alteration of this document not carried out by UL Verification Services Inc. will constitute fraud and shall nullify the document. This report must not be used by the client to claim product certification, approval, or endorsement by A2LA, NIST, or any agency of the U.S. Government, or any agency of the U.S. government.

Approved & Released By:	Prepared By:
Dave Weaver Operations Leader UL Verification Services Inc.	Miguel Llamas-Montiel Senior Lab Technician UL Verification Services Inc.

This report shall not be reproduced without the written approval of UL Verification Services Inc.

2. Test Methodology

The tests documented in this report were performed in accordance with ANSI C63.19-2011 Methods of Measurement of Compatibility between Wireless Communications Devices and Hearing Aids and FCC published procedures

KDB 285076 D01 HAC Guidance v06r03
KDB 285076 D02 T-Coil testing for CMRS IP v04
KDB 285076 D03 HAC FAQ v01r06
TCB workshop updates:

- TCB Workshop April 2022; Publication Update & Administrative Notes (Administrative Notes: PAG HAC5GS Interim Procedure for 5G Sub6)

3. Facilities and Accreditation

The test sites and measurement facilities used to collect data are located at

47266 Benicia Street
SAR Lab 11, SAR Lab 14

UL Verification Services Inc. is accredited by A2LA, Certificate Number 0751.05

4. Calibration and Uncertainty

4.1. Measuring Instrument Calibration

The measuring equipment used to perform the tests documented in this report has been calibrated in accordance with the manufacturers' recommendations and is traceable to recognized national standards.

Name of Equipment	Manufacturer	Type/Model	Serial No.	Cal. Due Date
ABM Probe	SPEAG	AM1DV3	3083	1/18/2024
ABM Probe	SPEAG	AM1DV3	3092	4/13/2024
Data Acquisition Electronics	SPEAG	DAE4	1152	11/18/2023
Data Acquisition Electronics	SPEAG	DAE4	1433	2/16/2024
Radio Communication Tester	R & S	CMW 500	208049	2/29/2024
Radio Communication Tester	R & S	CMW 500	85348	2/29/2024
AMMI	SPEAG	SE UMS 010 AB	1113	N/A
AMMI	SPEAG	SE UMS 010 AB	1016	N/A
AMMI	SPEAG	SE UMS 010 AB	1127	N/A
DAC	Sound Devices	USBPre 2	HB1420133009	N/A
Switch	TP-Link	TL-SG1024D	13688100415	N/A
Switch	TP-Link	TL-SG1016D	2165473001109.00	N/A
Support Device	Apple	iMac 14,4	C02NP00JGD92	N/A

This report shall not be reproduced without the written approval of UL Verification Services Inc.

4.2. Measurement Uncertainty

Measurement Uncertainty for Audio Band Magnetic Measurement

Error Description	Uncertainty values (±%)	Probe Dist.	Div.	c_i ABM1	c_i ABM2	Std. Unc. ABM1 (±%)	Std. Unc. ABM2 (±%)
Probe Sensitivity							
Reference level	3.0	N	1	1	1	3.0	3.0
AMCC geometry	0.4	R	√3	1	1	0.2	0.2
AMCC current	1.0	R	√3	1	1	0.6	0.6
Probe positioning during calibration	0.1	R	√3	1	1	0.1	0.1
Noise contribution	0.7	R	√3	0.0143	1	0.0	0.4
Frequency slope	5.9	R	√3	0.1	1.00	0.3	3.5
Probe System							
Repeatability / drift	1.0	R	√3	1	1	0.6	0.6
Linearity / Dynamic range	0.6	R	√3	1	1	0.4	0.4
Acoustic noise	1.0	R	√3	0.1	1	0.1	0.6
Probe angle	2.3	R	√3	1	1	1.4	1.4
Spectral processing	0.9	R	√3	1	1	0.5	0.5
Integration time	0.6	N	1	1	5	0.6	3.0
Field disturbation	0.2	R	√3	1	1	0.1	0.1
Test Signal							
Reference signal spectral response	0.6	R	√3	0	1	0.0	0.4
Positioning							
Probe positioning	1.9	R	√3	1	1	1.1	1.1
Phantom positioning	0.9	R	√3	1	1	0.5	0.5
EUT positioning	1.9	R	√3	1	1	1.1	1.1
External Contributions							
RF interference	0.0	R	√3	1	0.3	0.0	0.0
Test signal variation	2.0	R	√3	1	1	1.2	1.2
Combined Std. Uncertainty (ABM field)						4.1	6.1
Expanded Std. Uncertainty (%)						8.1	12.3

Notes for table
1. N - Nomal
2. R - Rectangular
3. Div. - Divisor used to obtain standard uncertainty

This report shall not be reproduced without the written approval of UL Verification Services Inc.

5. Test Procedures for all Technologies

5.1. General Procedures C63.19-2011, §7

ANSI C63.19-2011, §7

This document describes the procedures used to measure the ABM (T-Coil) performance of the WD. In addition to measuring the absolute signal levels, the A-weighted magnitude of the unintended signal shall also be determined. In order to assure that the required signal quality is measured, the measurement of the intended signal and the measurement of the unintended signal must be made at the same location for all measurement positions. In addition, the RF field strength at each measurement location must be at or below that required for the assigned category.

Measurements shall not include undesired properties from the WD's RF field; therefore, use of a coaxial connection to a base station simulator or non-radiating load may be necessary. However, even then with a coaxial connection to a base station simulator or non-radiating load there may still be RF leakage from the WD, which may interfere with the desired measurement. Pre-measurement checks should be made to avoid this possibility. All measurements shall be done with the WD operating on battery power with an appropriate normal speech audio signal input level given in Table 7.1. If the device display can be turned off during a phone call then that may be done during the measurement as well.

Measurements shall be performed at two locations specified in A.3, with the correct probe orientation for a particular location, in a multistage sequence by first measuring the field intensity of the desired T-Coil signal (ABM1) that is useful to a hearing aid T-Coil. The undesired magnetic components (ABM2) must be measured at the same location as the desired ABM or T-Coil signal (ABM1), and the ratio of desired to undesired ABM signals must be calculated. For the perpendicular field location, only the ABM1 frequency response shall be determined in a third measurement stage. The flow chart in Figure 7.3 illustrates this three-stage, two orientation process.

The following steps summarize the basic test flow for determining ABM1[1] and ABM2[2]. These steps assume that a sine wave or narrowband 1/3 octave signal can be used for the measurement of ABM1.

a. A validation of the test setup and instrumentation may be performed using a TMFS or Helmholtz coil. Measure the emissions and confirm that they are within the specified tolerance.
b. Position the WD in the test setup and connect the WD RF connector to a base station simulator or a non-radiating load as shown in Figure 7.1 or Figure 7.2. Confirm that equipment that requires calibration has been calibrated, and that the noise level meets the requirements given in 7.3.1.
c. The drive level to the WD is set such that the reference input level specified in Table 7.1 is input to the base station simulator (or manufacturer's test mode equivalent) in the 1 kHz, 1/3 octave band. This drive level shall be used for the T-Coil signal test (ABM1) at f = 1 kHz. Either a sine wave at 1025 Hz or a voice-like signal, band-limited to the 1 kHz 1/3 octave, as defined in 7.4.2, shall be used for the reference audio signal. If interference is found at 1025 Hz an alternative nearby reference audio signal frequency may be used.46 The same drive level will be used for the ABM1 frequency response measurements at each 1/3 octave band center frequency. The WD volume control may be set at any level up to maximum, provided that a signal at any frequency at maximum modulation would not result in clipping or signal overload.
d. Determine the magnetic measurement locations for the WD device (A.3), if not already specified by the manufacturer, as described in 7.4.4.1.1 and 7.4.4.2.

[1] ***Audio Band Magnetic signal - desired (ABM1):*** *Measured quantity of the desired magnetic signal*

[2] ***Audio Band Magnetic signal - undesired (ABM2):*** *Measured quantity of the undesired magnetic signal, such as interference from battery current and similar non-signal elements.*

This report shall not be reproduced without the written approval of UL Verification Services Inc.

e. At each measurement location, measure and record the desired T-Coil magnetic signals (ABM1 at f_i) as described in 7.4.4.2 in each individual ISO 266-1975 R10 standard 1/3 octave band. The desired audio band input frequency (f_i) shall be centered in each 1/3 octave band maintaining the same drive level as determined in item c) and the reading taken for that band.

Equivalent methods of determining the frequency response may also be employed, such as fast Fourier transform (FFT) analysis using noise excitation or input–output comparison using simulated speech. The full-band integrated or half-band integrated probe output, as specified in D.9, may be used, as long as the appropriate calibration curve is applied to the measured result, so as to yield an accurate measurement of the field magnitude. (The resulting measurement shall be an accurate measurement in dB A/m.)

All measurements of the desired signal shall be shown to be of the desired signal and not of an undesired signal. This may be shown by turning the desired signal ON and OFF with the probe measuring the same location. If the scanning method is used the scans shall show that all measurement points selected for the ABM1 measurement meet the ambient and test system noise criteria in 7.3.1.

f. At the measurement location for each orientation, measure and record the undesired broadband audio magnetic signal (ABM2) as specified in 7.4.4.4 with no audio signal applied (or digital zero applied, if appropriate) using A-weighting and the half-band integrator. Calculate the ratio of the desired to undesired signal strength (i.e., signal quality).

g. Obtain the data from the postprocessor, SEMCAD, and determine the category that properly classifies the signal quality based on Table 8.5.

Test Setup Diagram

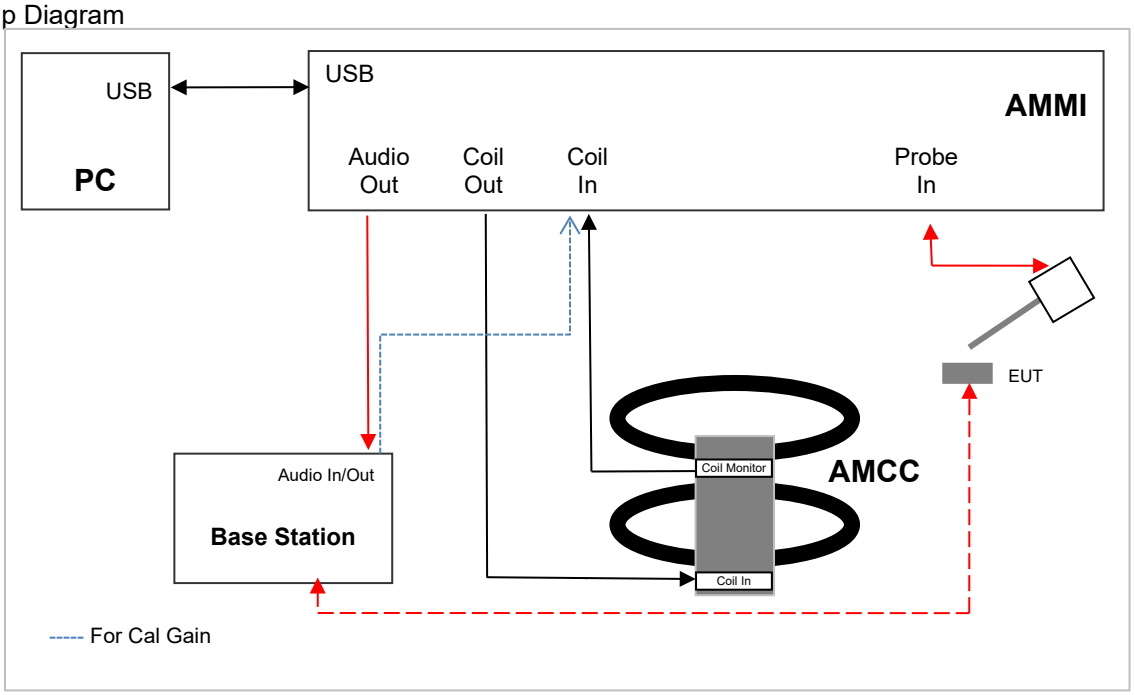

5.2. Voice over Wi-Fi (VoWiFi)

This device supports Wi-Fi calling (aka Voice over Wi-Fi or VoWi-Fi) which is an extended feature of the carriers' CMRS service to offload VoLTE calls onto local area networks over Wi-Fi via the Internet and subject to HAC assessment for phones with a HAC rating.

The set up for VoWi-Fi uses the base station as described in §5.1 with the exception that the reference audio level is set to -20dBm0. The reference level is calibrated using the standard call box calibration procedures with the exception of the -20dBm0 reference level being used (refer to §6).

An investigation was performed to determine worst case codec, bit rate, and air interface configuration (refer to §9).

This report shall not be reproduced without the written approval of UL Verification Services Inc.

5.3. Over the Top (OTT)

This device supports VoIP via a preinstalled application that uses the FaceTime service, using ACC-ELD as its only codec (refer to §8.1 for air interface details and §9.2.2 for codec bit rates). VoIP capabilities require HAC assessment when voice calls are supported over the cellular data connection via pre-installed VoIP applications.

The equipment is set up as shown below with a support device used to originate the call using the IP transport. The support device[3] connects to the cloud-based FaceTime service via a Wi-Fi access point and router, or an RJ45 Ethernet connection. The DUT connects to the VoIP service via a cellular/unlicensed air interface to the call box and an Ethernet connection from call box to Internet. The various codec bit rate and air interface configurations are evaluated to determine the worst-case configuration (refer to §9.2).

Test Setup configuration for OTT calls

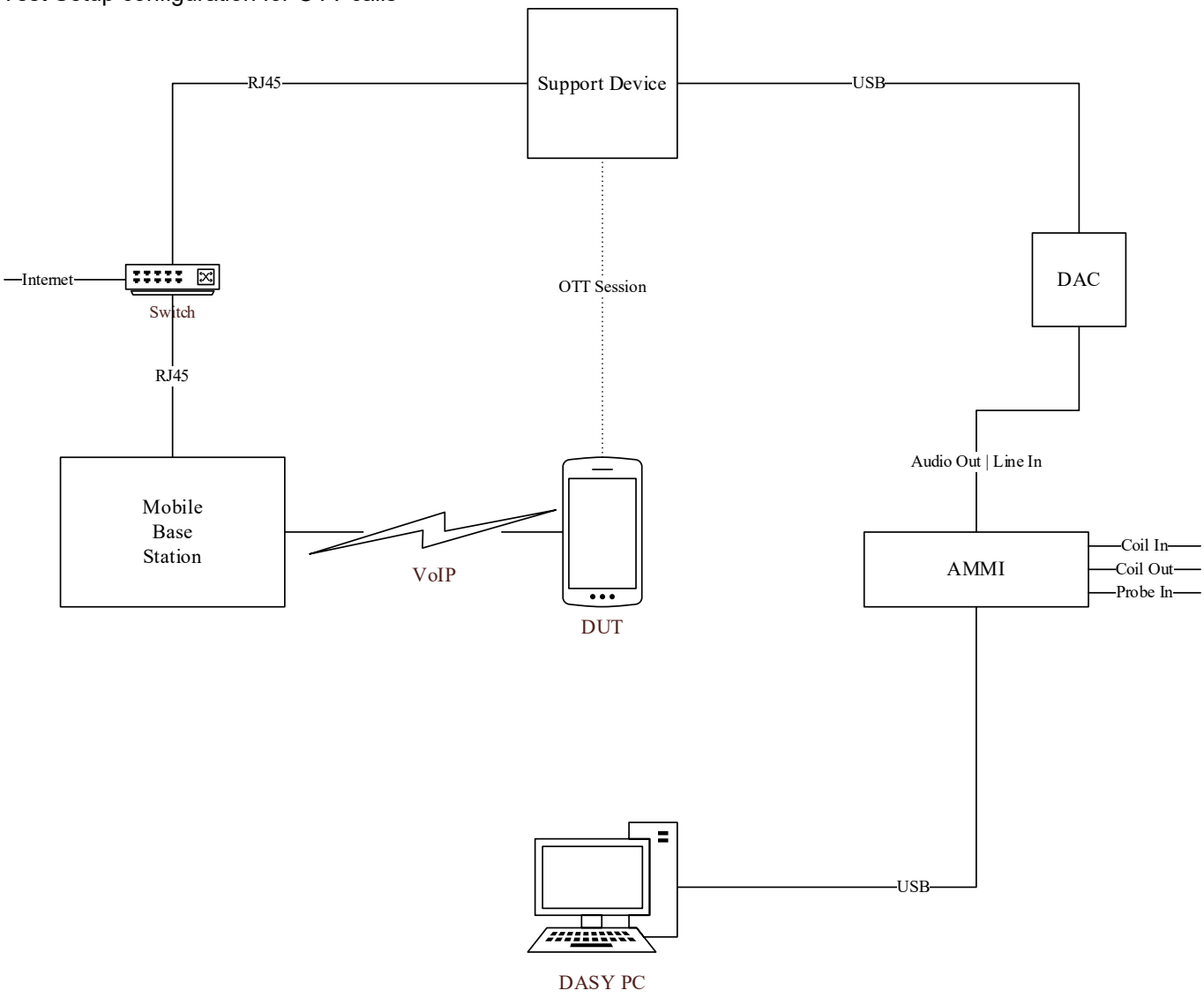

For the OTT call, the calibrated audio card within the CMW500 cannot be used so the AMMI is connected to an external Digital-Analog Converter (DAC) and the DAC is connected to the Support Device via USB. The test signal is sent from the DASY PC to the AMMI, from the AMMI to the DAC, from the DAC to the Support Device, and, via the VoIP call, to the DUT.

[3] The support device is an Apple iMac.

This report shall not be reproduced without the written approval of UL Verification Services Inc.

As this test set up uses an external DAC between the AMMI's audio output and support device, the appropriate gain factor for the OTT call needs be determined. This is done by connecting the DAC between the AMMI Audio output and Coil input as shown below.

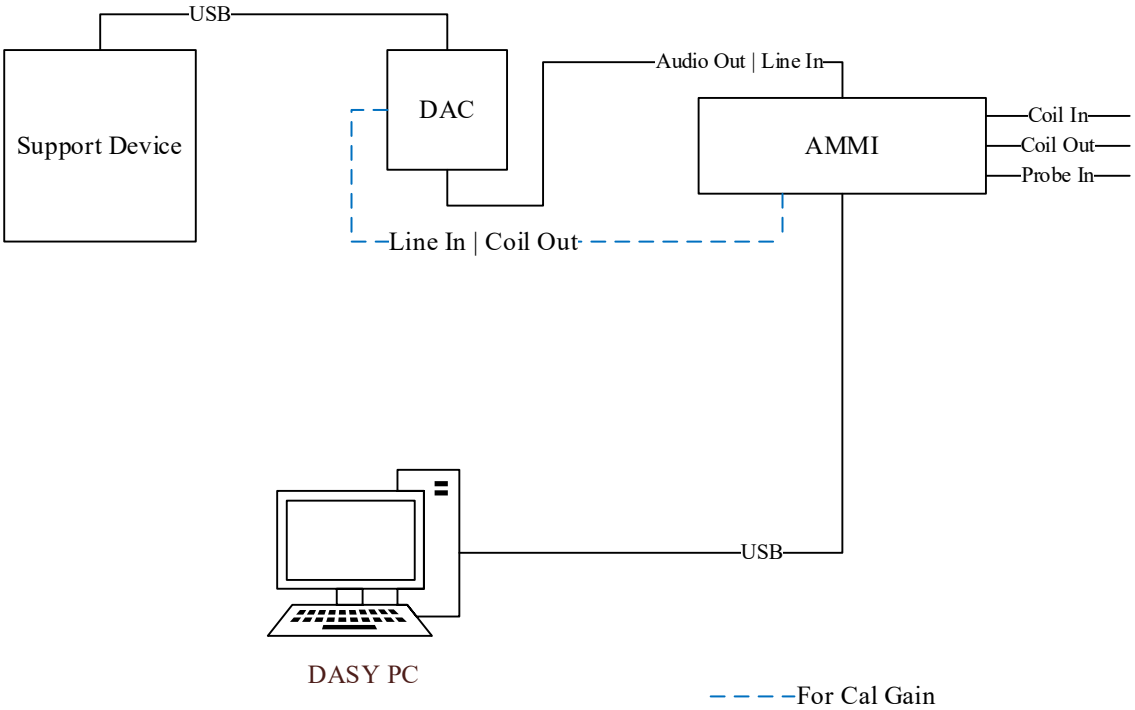

The DAC's gain is adjusted until the volume reaches 0 dBFS (3.14 dBm0 based on TIA/EIA 810-A) at the output. SPEAG's "TN-LK-05042018-C-T-Coil_Levels" document (Appendix E) steps E through H are then followed to determine the adjusted gain values as detailed in §6 so that the reference level is set to 23.14dB below full scale, i.e. at -20dBm0. A verification of the DAC's output is performed prior to testing.

This report shall not be reproduced without the written approval of UL Verification Services Inc.

6. Audio Level and Gain Measurements

The adjusted gain was calculated using Speag's *TN-LK-05042018-D-T-Coil_Levels* document (please refer to Appendix E). First, the output of AMMI is determined in a closed loop, then, using the CMW500's input sensitivity, the adjusted gain required for testing can then be calculated. The adjusted linear gain used within this report is as follows:

6.1. GSM/W-CDMA and VoLTE

Probe 3083 (SAR 11):

Signal type	Audio level [dBm0]	Gain [dB]	Gain (linear)
1 kHz sine	-16.00	14.87	5.54
1.025 kHz sine	-16.00	14.87	5.54
Voice 1 kHz	-16.00	27.60	23.99
Voice 300-3kHz	-16.00	33.44	46.99

Probe 3092 (SAR 14):

Signal type	Audio level [dBm0]	Gain [dB]	Gain (linear)
1 kHz sine	-16.00	14.93	5.58
1.025 kHz sine	-16.00	14.93	5.58
Voice 1 kHz	-16.00	27.66	24.15
Voice 300-3kHz	-16.00	33.50	47.31

Signal type	Audio level [dBm0]	Gain [dB]	Gain (linear)
1 kHz sine	-16.00	15.00	5.62
1.025 kHz sine	-16.00	14.99	5.62
Voice 1 kHz	-16.00	27.72	24.32
Voice 300-3kHz	-16.00	33.57	47.70

The following software/firmware was used to simulate the VoLTE server for testing:

Firmware	License Keys	Software Name
V3.8.10 for LTE	KS500	LTE FDD R8 SIG BASIC
	KS550	LTE TDD R8 SIG BASIC
V3.8.10 for Audio	KA100	IP APPL ENABLING IPv4
	KA150	IP APPL ENABLING IPv6
	KAA20	IP APPL IMS BASIC
	KM050	DATA APPL MEAS
	KS104	EVS SPEECH CODEC

This report shall not be reproduced without the written approval of UL Verification Services Inc.

6.2. VoWi-Fi

Probe 3083 (SAR 11):

Signal type	Audio level [dBm0]	Gain [dB]	Gain (linear)
1 kHz sine	-20.00	10.87	3.50
1.025 kHz sine	-20.00	10.87	3.50
Voice 1 kHz	-20.00	23.60	15.14
Voice 300-3kHz	-20.00	29.44	29.65

Probe 3092 (SAR 14):

Signal type	Audio level [dBm0]	Gain [dB]	Gain (linear)
1 kHz sine	-20.00	10.93	3.52
1.025 kHz sine	-20.00	10.93	3.52
Voice 1 kHz	-20.00	23.66	15.24
Voice 300-3kHz	-20.00	29.50	29.85

Signal type	Audio level [dBm0]	Gain [dB]	Gain (linear)
1 kHz sine	-20.00	11.00	3.55
1.025 kHz sine	-20.00	10.99	3.54
Voice 1 kHz	-20.00	23.72	15.35
Voice 300-3kHz	-20.00	29.57	30.09

Firmware	License Keys	Software Name
V3.8.20 for WLAN	KS650	WLAN A/B/G SIG BASIC
	KS651	WLAN N SIG BASIC
	KS656	WLAN IEEE 802.11ac
	KS657	WLAN IEEE 802.11ax
V3.8.10 for Audio	KA100	IP APPL ENABLING IPv4
	KA150	IP APPL ENABLING IPv6
	KAA20	IP APPL IMS BASIC
	KM050	DATA APPL MEAS
	KS104	EVS SPEECH CODEC

This report shall not be reproduced without the written approval of UL Verification Services Inc.

6.3. Over the Top (OTT)

For EDGE, HSPA, LTE, 5G NR and Wi-Fi, the linear gain levels are listed below were used. The results below are based on a reference input level of -20 dBm0. Granted, the C63.19-2011 interpretation for T-coil audio levels for LTE states that an input reference level of -16 dBm0 should be used, we, the test lab, opted for -20 dBm0 for LTE due to it being a more conservative input reference level.

To calibrate the DAC (refer §5.3), three .wav audio files (sine wave, 1 kHz voice, and 300 to 3 kHz voice) are sent from the DASY5 PC to the AMMI, then to the DAC. The Helmholtz resonator measures the field strength, which represents the AMMI to DAC input sensitivity. After determining the input sensitivity, the adjusted linear gain values can then be calculated.

Probe 3083 (SAR11):

Signal type	Audio level [dBm0]	Gain [dB]	Gain (linear)
1 kHz sine	-20.00	18.66	8.57
1.025 kHz sine	-20.00	18.66	8.57
Voice 1 kHz	-20.00	31.39	37.09
Voice 300-3kHz	-20.00	37.23	72.66

Probe 3092 (SAR14):

Signal type	Audio level [dBm0]	Gain [dB]	Gain (linear)
1 kHz sine	-20.00	18.79	8.70
1.025 kHz sine	-20.00	18.78	8.69
Voice 1 kHz	-20.00	31.51	37.61
Voice 300-3kHz	-20.00	37.36	73.75

This report shall not be reproduced without the written approval of UL Verification Services Inc.

7. T-coil Measurement Criteria

7.1. Frequency Response

The frequency response of the axial component of the magnetic field, measured in 1/3 octave bands, shall follow the response curve, over the frequency range 300 Hz to 3000 Hz.

Figure 8.1 and Figure 8.2 provide the boundaries for the specified frequency. These response curves are for true field strength measurements of the T-Coil signal. Thus the 6 dB/octave probe response has been corrected from the raw readings.

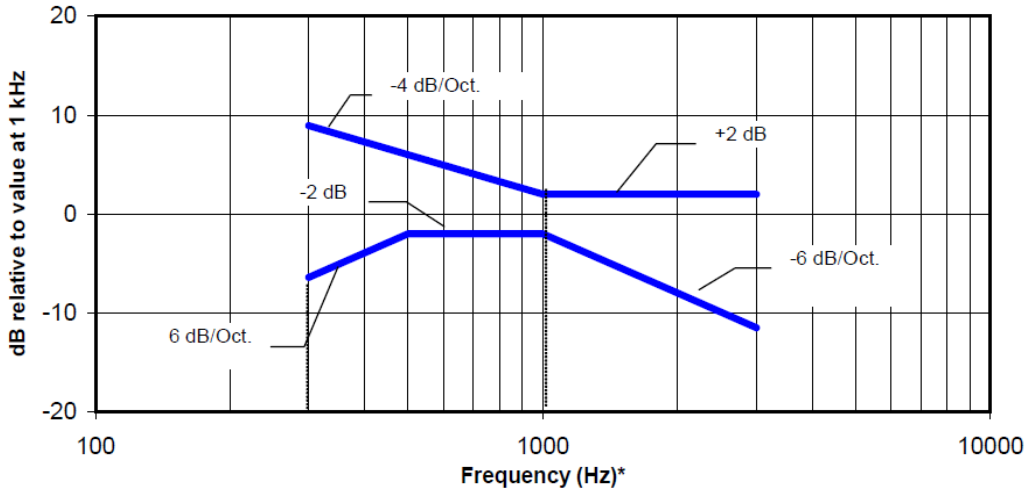

NOTE—The frequency response is between 300 Hz and 3000 Hz.

Figure 8.1—Magnetic field frequency response for WDs with field strength ≤ –15 dB (A/m) at 1 kHz

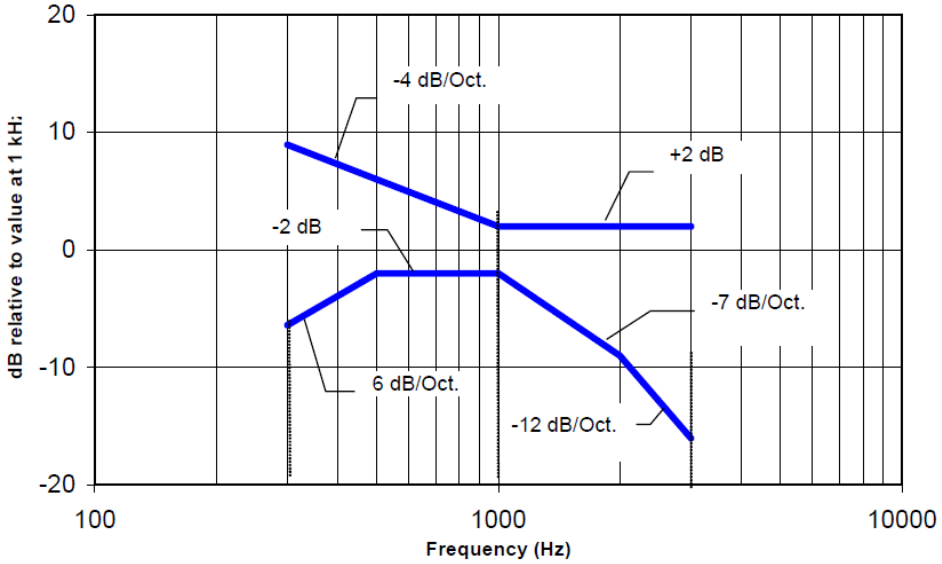

NOTE—The frequency response is between 300 Hz and 3000 Hz.

Figure 8.2—Magnetic field frequency response for WDs with a field that exceeds –15 dB(A/m) at 1 kHz

This report shall not be reproduced without the written approval of UL Verification Services Inc.

7.2. Signal to Noise

This specifies the signal-to-noise quality requirement for the intended T-Coil signal from a WD. The worst signal to noise of the two T-Coil signal measurements, as determined in Clause 7, shall be used to determine the T-Coil mode category per Table 8.5.

Only the RF immunity of the hearing aid is measured in T-Coil mode. It is assumed that a hearing aid can have no immunity to an interference signal in the audio band, which is the intended reception band for this mode. So, the only criterion that can be measured is the RF immunity in T-Coil Mode. This is measured using the same procedure as for the audio coupling mode and at the same levels as specified in 6.4.

Table 8.5—T-Coil signal-to-noise categories

Category	Telephone parameters WD signal quality [(signal + noise)-to-noise ratio in decibels]
Category T1	0 dB to 10 dB
Category T2	10 dB to 20 dB
Category T3	20 dB to 30 dB
Category T4	>30 dB

Measurement locations and reference plane to be used for the T-coil measurements

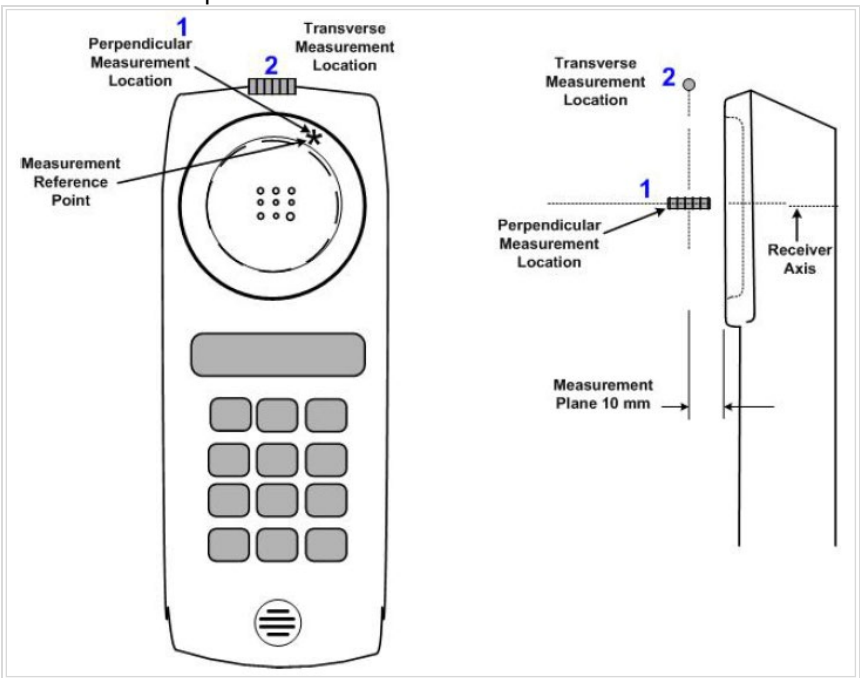

This report shall not be reproduced without the written approval of UL Verification Services Inc.

8. Device Under Test

The Apple iPhone is a smartphone with cellular GSM, GPRS, EGPRS, UMTS, LTE, 5G, IEEE 802.11a/b/g/n/ac/ax, Bluetooth, Ultra-Wideband, GPS, NFC, 802.15.4ab-NB and MSS technologies. All models except reference model support at least one UICC based SIM. The second SIM is either an UICC based p-SIM (physical SIM) or e-SIM (electronic SIM). The device supports a built-in inductive charging transmitter and receiver. The rechargeable battery is not user accessible.

All Models have the same PCB layout, circuit design, common components, antennas, and antenna locations their respective reference model. Their cellular modem, Wi-Fi, BT, NFC, WPT, UWB, 802.15.4ab-NB, and MSS transmitters are identical.

BCM4387 has 3 vendors. The Wi-Fi/BT radio modules have the same mechanical outline (e.g., the same package dimension and pin-out layout), use the same on-board antenna matching circuit, have an identical antenna structure, and are built and tested to conform to the same specifications and to operate within the same tolerances. Baseline testing was performed on the three variants to determine the worst case on all conducted power and radiated emissions.

Normal operation	Held to head		
Back Cover	The Back Cover is not removable		
Test sample information	**S/N**	**IMEI**	**Notes**
	CJJX9XP63J	N/A	HAC T-Coil Unit
	THMW3PV9P9	N/A	FR1 HAC T-Coil Unit

This report shall not be reproduced without the written approval of UL Verification Services Inc.

8.1. Air Interfaces and Operating Mode

Air Interface	Bands (MHz)	Type	C63.19 Tested	Simultaneous Transmitter	OTT Testing Required? Name of Voice Service[1, 2]	Power Reduction	Audio Codecs Evaluated
GSM	850	VO	Yes	Wi-Fi, BT (2.4GHz) & 802.15.4ab	CMRS	N/A	EFR
	1900					No	
	GPRS/EDGE	VD	Yes	Wi-Fi, BT (2.4GHz) & 802.15.4ab	Yes FaceTime	N/A	ACC-ELD
W-CDMA (UMTS)	850	VO	Yes	Wi-Fi, BT (2.4GHz) & 802.15.4ab)	CMRS	N/A	AMR-NB & AMR-WB
	1700						
	1900						
	HSPA	VD	Yes	Wi-Fi, BT (2.4GHz) & 802.15.4ab	Yes FaceTime	N/A	ACC-ELD
LTE - FDD	700 (B12/13/17)	VD	Yes	Wi-Fi, BT (2.4GHz) & 802.15.4ab	Yes FaceTime & VoLTE	N/A	VoLTE: AMR-NB, AMR-WB, EVS; OTT: ACC-ELD
	850 (B5/26)						
	1700 (B4/66)						
	1900 (B2/25)						
	2300 (B30)						
	2600 (B7)						
LTE - TDD	2500 (B53)	VD	Yes	Wi-Fi, BT (2.4GHz) & 802.15.4ab	Yes FaceTime & VoLTE	N/A	VoLTE: AMR-NB, AMR-WB, EVS; OTT: ACC-ELD
	2600 (B41)						
	3600 (B48)						
5G NR – FDD[2]	700 (n12)	VD	Yes	LTE, Wi-Fi, BT (2.4GHz) & 802.15.4ab	Yes FaceTime & VoNR	N/A	OTT: ACC-ELD
	850 (n5/n26)						
	1700 (n66/n70)						
	1900 (n2/n25)						
	2300 (n30)						
	2600 (n7)						
5G NR – TDD[2]	2500 (n53)	VD	Yes	LTE, Wi-Fi, BT (2.4GHz) & 802.15.4ab	Yes FaceTime & VoNR	N/A	OTT: ACC-ELD
	2600 (n41)						
	3500 (n77 Block A)						
	3600 (n48)						
	3900 (n77 Block C)						
Wi-Fi	2450	VD	Yes	WWAN & 802.15.4ab	Yes FaceTime & Wi-Fi Calling	N/A	VoWi-Fi: AMR-NB, AMR-WB, EVS; OTT: ACC-ELD
	5200 (U-NII-1)			WWAN, BT (2.4GHz) & Wi-Fi 2.4 GHz			
	5300 (U-NII-2A)						
	5500 (U-NII-2C)						
	5800 (U-NII-3)						
802.15.4ab-NB	5800 (U-NII-3)	DT	N/A	WWAN, BT (2.4GHz) & Wi-Fi 2.4 GHz	N/A	N/A	N/A
BT	2450	DT	N/A	WWAN, BT (2.4GHz) & Wi-Fi (5 GHz bands)[3]	N/A	N/A	N/A
MSS	1600	DT	N/A	N/A	N/A	N/A	N/A

Type
VO: Legacy Cellular Voice Service
DT: Digital Transport only (no voice)
VD: IP Voice Service over Digital Transport
CMRS: Commercial Mobile Radio Service

Note(s):
1. For protocols not listed in Table 7.1 of ANSI C63.19-2011 or the ANSI C63.19-2011 VoLTE interpretation, the average speech level of -20 dBm0 was used
2. VoNR is supported: manufacturer states that VoNR uses the same protocol, Codec(s) and reference level as VoLTE.
3. Supported Frequency > 6GHz. ANSI C63,19 2011 only requires HAC evaluations for Frequencies < 6GHz.

This report shall not be reproduced without the written approval of UL Verification Services Inc.

9. Investigations (Antenna, Codec, & Air Interface)

DUT utilizes an Antenna - Port mapping feature. a Port is a collection (cluster) of antennas. Once the Port and Frequency Band has been selected, the transmitting Antenna is auto selected. Below is a description of the Port - Antenna mapping for the DUT.

Port	Frequency Band	Antenna
A	LB	1
	LMB	1
	MBHB	1
	UHB	7
B	LB	2
	LMB	2
	MBHB	2
	UHB	8
C	LB[1]	3
	MBHB	3
	UHB	9
D	MBHB	4
	UHB	4

LB = Lower Band (617 MHz - 960 MHz)

LMB = Lower - Mid Band (1427 MHz - 1700 MHz)

MBHB = Mid Band - High Band (1710 MHz - 2960 MHz)

UHB = Ultra High Band (3300 MHz - 4200 MHz)

An investigation was performed to determine the worst-case Port for each Licensed technology. All subsequent measurements were determined by this investigation.

Note(s):

1. Port C for Lower Band is only supported for LTE and 5G NR Bands.

The device supports four (4) WLAN Tx antennas:

Antenna	Technology
3 (Lower)	Wi-Fi 2.4GHz
	Bluetooth
4 (Upper)	Wi-Fi 2.4GHz
	Bluetooth
5 (Lower)	Wi-Fi 5 GHz
6 (Upper)	Wi-Fi 5 GHz

An investigation was performed to determine the worst-case WLAN Antenna. All subsequent measurements were determined by this investigation.

This report shall not be reproduced without the written approval of UL Verification Services Inc.

9.1. CMRS

9.1.1. Antenna Investigation

Note(s):	Mode:	Channel and Frequency	Bandwidth (Data Rate)	Antenna	Orientation	ABM1 dB(A/m)	ABM2 dB(A/m)	Ambient Noise dB(A/m)	Freq. Response (dB)	ABM SNR (dB)	T-Rating
1	GSM 1900 Voice Coder Speechcodec Low	661 1880 MHz	N/A	Port A	z (Axial)	13.42	-34.57	-55.13	1.89	47.99	T4
					y (Transversal)	2.60	-45.79	-54.06	2.00	48.39	T4
				Port B	z (Axial)	12.66	-31.58	-55.13	1.84	44.24	T4
					y (Transversal)	3.59	-38.57	-54.06	1.84	42.16	T4
				Port C	z (Axial)	13.10	-29.64	-55.13	1.71	42.74	T4
					y (Transversal)	3.26	-36.92	-54.06	1.76	**40.18**	T4
				Port D	z (Axial)	13.01	-30.62	-55.13	1.45	43.63	T4
					y (Transversal)	3.42	-37.98	-54.06	1.60	41.40	T4
2	W-CDMA BII Rel. 99 AMR-NB: 4.75 kbps	9400 1880 MHz	N/A	Port A	z (Axial)	13.44	-50.20	-53.10	1.83	63.64	T4
					y (Transversal)	6.17	-50.80	-54.03	1.55	**56.97**	T4
				Port B	z (Axial)	13.30	-50.55	-53.10	1.42	63.85	T4
					y (Transversal)	5.70	-51.27	-54.03	1.69	56.97	T4
				Port C	z (Axial)	13.29	-50.51	-53.10	2.00	63.80	T4
					y (Transversal)	6.26	-51.21	-54.03	1.97	57.47	T4
				Port D	z (Axial)	13.39	-50.66	-53.10	2.00	64.05	T4
					y (Transversal)	5.89	-51.14	-54.03	1.62	57.03	T4
3	LTE Band 25 QPSK 1/49 RB AMR-NB: 4.75 kbps	26365 1882.5 MHz	20 MHz	Port A	z (Axial)	14.35	-48.26	-55.85	1.87	62.61	T4
					y (Transversal)	5.88	-52.26	-55.83	1.44	58.14	T4
				Port B	z (Axial)	14.02	-49.74	-55.85	1.91	63.76	T4
					y (Transversal)	6.21	-52.63	-55.83	1.47	58.84	T4
				Port C	z (Axial)	14.22	-49.54	-55.85	1.61	63.76	T4
					y (Transversal)	6.10	-52.15	-55.83	1.28	58.25	T4
				Pord D	z (Axial)	14.25	-49.86	-55.85	1.62	64.11	T4
					y (Transversal)	5.91	-52.17	-55.83	1.84	**58.08**	T4
4	LTE Band 41 QPSK 1/49 RB AMR-NB: 4.75 kbps	40620 2593 MHz	20 MHz	Port A	z (Axial)	12.80	-46.51	-55.88	1.89	59.31	T4
					y (Transversal)	6.04	-51.92	-55.82	1.85	57.96	T4
				Port B	z (Axial)	12.70	-41.70	-55.88	2.00	54.40	T4
					y (Transversal)	5.92	-47.58	-55.82	1.61	53.50	T4
				Port C	z (Axial)	12.92	-42.98	-55.88	1.96	55.90	T4
					y (Transversal)	4.12	-46.29	-55.82	2.00	50.41	T4
				Port D	z (Axial)	12.77	-36.11	-55.88	1.86	**48.88**	T4
					y (Transversal)	4.23	-45.69	-55.82	1.76	49.92	T4
5	802.11b AMR-NB: 4.75 kbps	6 2437 MHz	20 MHz DSSS 1 Mbps	ANT 3	z (Axial)	11.92	-47.03	-49.91	1.06	58.95	T4
					y (Transversal)	3.46	-49.13	-50.59	1.50	52.59	T4
				ANT 4	z (Axial)	13.45	-45.77	-49.91	1.62	59.22	T4
					y (Transversal)	4.54	-47.86	-50.59	0.96	**52.40**	T4
6	802.11a AMR-NB: 4.75 kbps	36 5180 MHz	20 MHz BPSK 6 Mbps	ANT 5	z (Axial)	11.17	-48.87	-49.92	1.14	60.04	T4
					y (Transversal)	2.64	-50.08	-50.51	0.88	52.72	T4
				ANT 6	z (Axial)	10.87	-47.77	-49.92	1.37	58.64	T4
					y (Transversal)	2.63	-48.49	-50.51	1.22	**51.12**	T4

Note(s):

1. Port C has been determined to be the worst-case antenna for GSM above 1 GHz frequency bands and Port B for below 1GHz.
2. Port A has been determined to be the worst-case antenna for W-CDMA.
3. Port D has been determined to be the worst-case antenna for LTE-FDD above 1 GHz frequency bands and Port A for below 1GHz.
4. Port D has been determined to be the worst-case antenna for LTE-TDD.
5. ANT 4 has been determined to be the worst-case antenna for Wi-Fi 2.4 GHz.
6. ANT 6 has been determined to be the worst-case antenna for Wi-Fi 5 GHz.

This report shall not be reproduced without the written approval of UL Verification Services Inc.

9.1.2. Codec Investigation

An investigation between the various codec configurations (Low/Mid/High bit rates for Narrowband, Wideband and EVS) and specific parameters are documented (ABM1, ABM2, S+N/N, frequency response) to determine the worst-case bit rates for each voice service type. The table below compares the varying codec configurations. A codec investigation was performed on one band of each W-CDMA, LTE FDD and LTE TDD.

The highlighted results below were determined to be the worst-case codec configuration(s) for LTE and W-CDMA.

W-CDMA Codec Investigation

W-CDMA Codec Investigation									
Codec State	AMR-NB (kbps)			AMR-WB (kbps)			Orientation	Antenna	Band/Channel/ Bandw idth
	4.75	7.4	12.2	6.6	15.85	23.85			
ABM1 (dB/m)	13.44	16.07	15.79	11.53	11.87	12.57	z (Axial)	Port A	W-CDMA BII Rel. 99 Ch. 9400
ABM2 (dBA/m)	-50.20	-44.21	-48.02	-49.46	-47.05	-48.04			
SNR (dB)	63.64	60.28	63.81	60.99	58.92	60.61			
Freq. Resposne (dB)	1.83	2.00	2.00	2.00	2.00	1.93			
ABM1 (dB/m)	6.17	8.62	8.73	4.43	4.86	5.09	y (Transversal)		
ABM2 (dBA/m)	-50.80	-50.43	-46.08	-51.15	-50.08	-50.00			
SNR (dB)	56.97	59.05	**54.81**	55.58	54.94	55.09			
Freq. Resposne (dB)	1.55	2.00	2.00	1.82	1.95	2.00			

VoLTE Codec Investigation

VoLTE Codec Investigation												
Codec State	AMR-NB (kbps)			AMR-WB (kbps)			EVS (kbps)			Orientation	Antenna	Band/Channel/ Bandw idth
	4.75	7.4	12.2	6.6	15.85	23.85	5.9	9.6	24.4			
ABM1 (dB/m)	14.25	14.47	14.60	9.41	10.56	10.52	13.14	12.82	12.95	z (Axial)	Pord D	LTE Band 25 CH. 26365 1/49 RB QPSK 20 MHz BW
ABM2 (dBA/m)	-49.86	-49.59	-49.54	-48.71	-49.95	-50.24	-49.12	-43.47	-42.71			
SNR (dB)	64.11	64.06	64.14	58.12	60.51	60.76	62.26	56.29	55.66			
Freq. Resposne (dB)	1.62	2.00	1.96	1.75	1.92	1.86	1.92	1.84	1.66			
ABM1 (dB/m)	5.91	6.34	6.60	1.99	2.74	2.82	2.15	4.51	5.09	y (Transversal)		
ABM2 (dBA/m)	-52.17	-52.45	-52.31	-51.72	-52.16	-52.51	-51.39	-48.75	-45.87			
SNR (dB)	58.08	58.79	58.91	53.71	54.90	55.33	53.54	53.26	**50.96**			
Freq. Resposne (dB)	1.84	1.63	1.99	2.00	1.93	1.71	1.60	1.54	1.58			
ABM1 (dB/m)	12.77	12.99	13.16	8.06	9.26	9.41	10.73	12.29	12.78	z (Axial)	Port D	LTE Band 41 CH. 40620 1/49 RB QPSK 20 MHz BW
ABM2 (dBA/m)	-36.11	-38.85	-38.78	-43.26	-43.05	-42.76	-43.25	-43.06	-39.75			
SNR (dB)	**48.88**	51.84	51.94	51.32	52.31	52.17	53.98	55.35	52.53			
Freq. Resposne (dB)	1.86	1.77	2.00	2.00	1.41	1.55	1.86	1.41	1.66			
ABM1 (dB/m)	4.23	4.53	4.69	2.12	2.57	2.48	4.10	6.33	6.31	y (Transversal)		
ABM2 (dBA/m)	-45.69	-47.19	-47.07	-48.71	-49.28	-49.15	-48.65	-48.75	-46.62			
SNR (dB)	49.92	51.72	51.76	50.83	51.85	51.63	52.75	55.08	52.93			
Freq. Resposne (dB)	1.76	2.00	1.94	1.67	1.69	1.80	1.91	1.63	1.78			

Note(s):

1. For W-CDMA, it is observed that AMR-NB: 12.20 kbps is the worst-case.
2. For LTE-FDD, it is observed that EVS: 24.40 kbps is the worst-case.
3. For LTE-TDD, it is observed that AMR-NB: 4.75 kbps is the worst-case.

This report shall not be reproduced without the written approval of UL Verification Services Inc.

9.1.3. Air Interface Investigation

A limited set of bands/channels/bandwidths were tested to confirm that there is no effect to the T-rating when changing the band/channel/bandwidth.

W-CDMA Air Interface Investigation:

W-CDMA Air Interface Investigation											
Mode:	Antenna	Channel and Frequency	Bandwidth (if applicable)	Orientation	ABM1 dB(A/m)	ABM2 dB(A/m)	Ambient Noise dB(A/m)	Freq. Response (dB)	ABM SNR (dB)	T-Rating	Location
W-CDMA Band II Rel. 99 AMR-NB: 12.2	Port A	9262 1852.4 MHz	N/A	z (Axial)	15.75	-46.64	-53.10	2.00	62.39	T4	12.4, -9.5, 3.7
				y (Transversal)	8.61	-49.28	-54.03	2.00	57.89	T4	13.1, -3.5, 3.7
		9400 1880.0 MHz	N/A	z (Axial)	15.79	-48.02	-53.10	2.00	63.81	T4	12.5, -9.6, 3.7
				y (Transversal)	8.73	-46.08	-54.03	2.00	**54.81**	T4	13.1, -3.5, 3.7
		9538 1907.6 MHz	N/A	z (Axial)	15.71	-44.10	-53.10	2.00	59.81	T4	12.4, -9.5, 3.7
				y (Transversal)	8.61	-50.11	-54.03	2.00	58.72	T4	13.1, -3.5, 3.7

Note(s):

For all subsequent tests for W-CDMA, y (Transversal) middle channel was used in conjunction with the worst-case bit rate found in §9.1.2.

VoLTE Air Interface Investigation:

VoLTE Air Interface Investigation													
Mode:	Bandwidth (if applicable)	Antenna	Channel and Frequency	RB Allocation		Orientation	ABM1 dB(A/m)	ABM2 dB(A/m)	Ambient Noise dB(A/m)	Freq. Response (dB)	ABM SNR (dB)	T-Rating	Location
LTE Band 25 QPSK EVS: 24.4	20 MHz	Pord D	26140 1860 MHz	50	0	z (Axial)	12.75	-39.65	-55.82	1.65	52.40	T4	12.8, -15.5, 3.7
						y (Transversal)	5.02	-46.90	-55.89	1.71	51.92	T4	12.3, -8.3, 3.7
			26365 1882.5 MHz	1	0	z (Axial)	12.73	-41.60	-55.82	1.55	54.33	T4	12.8, -15.5, 3.7
						y (Transversal)	4.73	-46.36	-55.89	1.59	51.09	T4	12.3, -8.3, 3.7
				1	49	z (Axial)	12.95	-42.71	-55.82	1.66	55.66	T4	12.8, -15.5, 3.7
						y (Transversal)	5.09	-45.87	-55.89	1.58	50.96	T4	12.1, -8.3, 3.7
				1	99	z (Axial)	12.70	-42.32	-55.82	1.76	55.02	T4	12.8, -15.5, 3.7
						y (Transversal)	4.69	-46.84	-55.89	1.64	51.53	T4	12.3, -8.3, 3.7
				50	0	z (Axial)	13.18	-41.34	-55.82	1.75	54.52	T4	12.8, -15.5, 3.7
						y (Transversal)	4.85	-44.67	-55.89	1.81	**49.52**	T4	12.3, -8.3, 3.7
				50	24	z (Axial)	13.12	-40.62	-55.82	1.76	53.74	T4	12.8, -15.5, 3.7
						y (Transversal)	4.60	-45.88	-55.89	1.61	50.48	T4	12.3, -8.3, 3.7
				50	49	z (Axial)	12.76	-41.20	-55.82	1.66	53.96	T4	12.8, -15.5, 3.7
						y (Transversal)	4.81	-46.21	-55.89	1.82	51.02	T4	12.3, -8.3, 3.7
				100	0	z (Axial)	12.90	-42.14	-55.82	1.75	55.04	T4	12.8, -15.5, 3.7
						y (Transversal)	5.15	-46.66	-55.89	1.69	51.81	T4	12.3, -8.3, 3.7
			26590 1905 MHz	50	0	z (Axial)	13.62	-48.03	-55.82	1.55	61.65	T4	13.3, -16.3, 3.7
						y (Transversal)	5.48	-50.61	-55.89	1.83	56.09	T4	14.2, -7.9, 3.7
LTE Band 25 16QAM EVS: 24.4	20 MHz	Pord D	26365 1882.5 MHz	50	0	z (Axial)	14.72	-47.11	-55.82	1.68	61.83	T4	15, -15.8, 3.7
						y (Transversal)	5.97	-51.55	-55.89	1.63	57.52	T4	15.4, -8.3, 3.7
LTE Band 25 64QAM EVS: 24.4	20 MHz	Pord D	26365 1882.5 MHz	50	0	z (Axial)	14.27	-46.84	-55.82	1.73	61.11	T4	15.1, -15.7, 3.7
						y (Transversal)	6.36	-51.88	-55.89	1.67	58.24	T4	15.2, -8.2, 3.7
LTE Band 25 256QAM EVS: 24.4	20 MHz	Pord D	26365 1882.5 MHz	50	0	z (Axial)	14.30	-47.80	-55.82	1.81	62.10	T4	15.1, -15.7, 3.7
						y (Transversal)	5.80	-49.11	-55.89	1.58	54.91	T4	15.3, -8.2, 3.7
LTE Band 25 QPSK EVS: 24.4	15 MHz	Pord D	26365 1882.5 MHz	36	0	z (Axial)	14.24	-47.29	-55.82	1.64	61.53	T4	15.1, -15.7, 3.7
						y (Transversal)	5.87	-51.93	-55.89	1.74	57.80	T4	15.3, -8.2, 3.7
LTE Band 25 QPSK EVS: 24.4	10 MHz	Pord D	26365 1882.5 MHz	25	0	z (Axial)	14.53	-46.92	-55.82	1.72	61.45	T4	15.1, -15.7, 3.7
						y (Transversal)	5.75	-51.61	-55.89	1.66	57.36	T4	15.3, -8.2, 3.7

Note(s):

For all subsequent tests for LTE-FDD, y (transversal) middle channel, QPSK modulation, and 50% RB size and low RB allocation was used in conjunction with the worst-case bit rate found in §9.1.2.

This report shall not be reproduced without the written approval of UL Verification Services Inc.

VoLTE Air Interface Investigation (continued):

VoLTE Air Interface Investigation													
Mode:	Bandwidth (if applicable)	Antenna	Channel and Frequency	RB Allocation		Orientation	ABM1 dB(A/m)	ABM2 dB(A/m)	Ambient Noise dB(A/m)	Freq. Response (dB)	ABM SNR (dB)	T-Rating	Location
LTE Band 41 QPSK AMR-NB: 4.75	20 MHz	Port D	39750 2506 MHz	1	0	z (Axial)	12.35	-37.48	-55.88	2.00	49.83	T4	13, -16.7, 3.7
						y (Transversal)	2.87	-46.06	-55.82	1.76	48.93	T4	11.2, -7.6, 3.7
			40185 2549.5 MHz	1	0	z (Axial)	12.50	-38.27	-55.88	1.50	50.77	T4	13, -16.7, 3.7
						y (Transversal)	3.14	-46.97	-55.82	1.67	50.11	T4	11.2, -7.6, 3.7
			40620 2593 MHz	1	0	z (Axial)	12.72	-38.93	-55.88	1.68	51.65	T4	13, -16.7, 3.7
						y (Transversal)	3.39	-44.71	-55.82	1.58	**48.10**	T4	11.3, -7.5, 3.7
				1	49	z (Axial)	12.77	-36.11	-55.88	1.86	48.88	T4	12.9, -16.7, 3.7
						y (Transversal)	4.23	-45.69	-55.82	1.76	49.92	T4	12.5, -7.9, 3.7
				1	99	z (Axial)	12.65	-39.11	-55.88	1.93	51.76	T4	13, -16.7, 3.7
						y (Transversal)	3.28	-46.54	-55.82	1.42	49.82	T4	11.2, -7.6, 3.7
				50	0	z (Axial)	12.70	-35.55	-55.88	1.93	48.25	T4	12.9, -16.7, 3.7
						y (Transversal)	3.57	-44.81	-55.82	1.71	48.38	T4	11.3, -7.9, 3.7
				50	24	z (Axial)	12.37	-38.76	-55.88	1.50	51.13	T4	12.8, -16.9, 3.7
						y (Transversal)	3.37	-47.16	-55.82	2.00	50.53	T4	11.3, -7.8, 3.7
				50	49	z (Axial)	12.46	-38.84	-55.88	1.75	51.30	T4	12.8, -16.9, 3.7
						y (Transversal)	3.28	-47.07	-55.82	1.50	50.35	T4	11.3, -7.8, 3.7
				100	0	z (Axial)	12.42	-38.73	-55.88	1.93	51.15	T4	12.8, -16.9, 3.7
						y (Transversal)	3.25	-46.98	-55.82	2.00	50.23	T4	11.3, -7.8, 3.7
			41055 2636.5 MHz	1	0	z (Axial)	12.51	-37.89	-55.88	1.83	50.40	T4	13, -16.7, 3.7
						y (Transversal)	2.94	-46.65	-55.82	1.94	49.59	T4	11.2, -7.6, 3.7
			41490 2680 MHz	1	0	z (Axial)	12.57	-38.21	-55.88	1.45	50.78	T4	13, -16.7, 3.7
						y (Transversal)	3.23	-46.98	-55.82	1.53	50.21	T4	11.2, -7.6, 3.7
LTE Band 41 16QAM AMR-NB: 4.75	20 MHz	Port D	40620 2593 MHz	1	0	z (Axial)	12.38	-38.13	-55.88	2.00	50.51	T4	13, -16.7, 3.7
						y (Transversal)	2.90	-46.65	-55.82	2.00	49.55	T4	11.2, -7.6, 3.7
LTE Band 41 64QAM AMR-NB: 4.75	20 MHz	Port D	40620 2593 MHz	1	0	z (Axial)	12.44	-38.19	-55.88	2.00	50.63	T4	13, -16.7, 3.7
						y (Transversal)	3.14	-46.25	-55.82	2.00	49.39	T4	11.2, -7.6, 3.7
LTE Band 41 256QAM AMR-NB: 4.75	20 MHz	Port D	40620 2593 MHz	1	0	z (Axial)	12.42	-38.06	-55.88	1.44	50.48	T4	13, -16.7, 3.7
						y (Transversal)	2.73	-46.28	-55.82	1.95	49.01	T4	11.2, -7.6, 3.7
LTE Band 41 QPSK AMR-NB: 4.75	15 MHz	Port D	40620 2593 MHz	1	0	z (Axial)	12.97	-37.98	-55.88	1.85	50.95	T4	13, -16.7, 3.7
						y (Transversal)	3.09	-46.62	-55.82	1.30	49.71	T4	11.2, -7.6, 3.7
LTE Band 41 QPSK AMR-NB: 4.75	10 MHz	Port D	40620 2593 MHz	1	0	z (Axial)	12.44	-38.20	-55.88	1.56	50.64	T4	13, -16.7, 3.7
						y (Transversal)	3.03	-46.46	-55.82	1.20	49.49	T4	11.2, -7.6, 3.7

Note(s):

For all subsequent tests for LTE-TDD, y (transversal) middle channel, QPSK modulation, and 1% RB size and low RB allocation was used in conjunction with the worst-case bit rate found in §9.1.2.

This report shall not be reproduced without the written approval of UL Verification Services Inc.

9.1.4. VoWi-Fi Codec Investigation

An investigation between the various codec configurations (Low/Mid/High bit rates for Narrowband, Wideband and EVS) and specific parameters are documented (ABM1, ABM2, S+N/N, frequency response) to determine the worst-case bit rates for each voice service type. The table below compares the varying codec configurations. A codec investigation was performed for each Wi-Fi 2.4GHz and 5GHz.

The highlighted results below were determined to be the worst-case codec configuration(s) for Wi-Fi 2.4GHz and 5GHz

VoWi-Fi Codec Investigation												
Codec State	AMR-NB (kbit/s)			AMR-WB (kbit/s)			EVS (kbit/s)			Orientation	Antenna	Band/Channel/ Bandw idth
	4.75	7.4	12.2	6.6	15.85	23.85	5.9	9.6	24.4			
ABM1 (dB/m)	13.45	13.75	13.94	9.80	10.88	10.90	12.72	14.34	13.84	z (Axial)	ANT 4	802.11b Ch. 6 DSSS 1 Mbps
ABM2 (dBA/m)	-45.77	-45.99	-45.83	-45.95	-38.19	-40.65	-33.78	-35.30	-36.46			
SNR (dB)	59.22	59.74	59.77	55.75	49.07	51.55	46.50	49.64	50.30			
Freq. Resposne (dB)	1.62	0.97	1.39	1.48	2.00	1.21	1.48	1.24	1.29			
ABM1 (dB/m)	4.54	4.73	4.97	-0.46	0.87	1.19	3.36	3.48	4.08	y (Transversal)		
ABM2 (dBA/m)	-47.86	-47.74	-47.67	-48.53	-48.48	-47.29	-42.36	-42.56	-43.70			
SNR (dB)	52.40	52.47	52.64	48.07	49.35	48.48	**45.72**	46.04	47.78			
Freq. Resposne (dB)	0.96	1.62	1.15	1.14	1.31	1.59	1.47	1.14	1.23			
ABM1 (dB/m)	10.87	8.59	8.95	3.94	4.99	4.98	6.85	9.30	8.66	z (Axial)	ANT 6	802.11a Ch. 36 BPSK 6 Mbps
ABM2 (dBA/m)	-47.77	-46.81	-46.98	-46.97	-47.04	-46.87	-39.05	-38.54	-42.12			
SNR (dB)	58.64	55.40	55.93	50.91	52.03	51.85	45.90	47.84	50.78			
Freq. Resposne (dB)	1.37	0.95	0.93	1.44	1.43	1.12	0.34	1.87	0.72			
ABM1 (dB/m)	2.63	2.79	2.95	-2.55	-1.73	-1.68	1.74	2.89	2.92	y (Transversal)		
ABM2 (dBA/m)	-48.49	-47.34	-47.47	-48.15	-48.19	-48.23	-43.51	-44.63	-44.75			
SNR (dB)	51.12	50.13	50.42	45.60	46.46	46.55	**45.25**	47.52	47.67			
Freq. Resposne (dB)	1.22	0.35	1.09	1.76	1.09	1.19	0.66	1.58	0.73			

Note(s):

A bit rate investigation was performed on the pre-installed phone application to determine the worst-case bit rate:

1. For Wi-Fi 2.4 GHz, it is observed that EVS: 5.90 kbps is the worst-case.
2. For Wi-Fi 5 GHz, it is observed that EVS: 5.90 kbps is the worst-case.

This report shall not be reproduced without the written approval of UL Verification Services Inc.

9.1.5. VoWi-Fi Air Interface Investigation

VoWi-Fi Air Interface Investigation												
Mode:	Channel and Frequency	Antenna	Modulation/Index	Data Rate	Orientation	ABM1 dB(A/m)	ABM2 dB(A/m)	Ambient Noise dB(A/m)	Freq. Response (dB)	ABM SNR (dB)	T-Rating	Location
802.11b EVS: 5.9	6 2437 MHz	ANT 4	DSSS	1 Mbps	z (Axial)	12.72	-33.78	-49.92	1.48	46.50	T4	12.1, -14.6, 3.7
					y (Transversal)	3.36	-42.36	-50.51	1.47	45.72	T4	7.9, -7.1, 3.7
			CCK	5.5 Mbps	z (Axial)	12.32	-34.47	-49.92	1.30	46.79	T4	16.7, -17.1, 3.7
					y (Transversal)	3.84	-42.14	-50.51	0.90	45.98	T4	7.9, -7.9, 3.7
				11 Mbps	z (Axial)	11.07	-35.32	-49.92	1.18	46.39	T4	16.5, -17.1, 3.7
					y (Transversal)	0.95	-45.02	-50.51	0.42	45.97	T4	7.8, -7.9, 3.7
802.11g EVS: 5.9	6 2437 MHz	ANT 4	DSSS	1 Mbps	z (Axial)	10.41	-37.59	-49.92	0.81	48.00	T4	15, -15.4, 3.7
					y (Transversal)	1.98	-44.19	-50.51	1.22	46.17	T4	15.4, -21.7, 3.7
			QPSK	12 Mbps	z (Axial)	10.99	-37.38	-49.92	1.44	48.37	T4	12.1, -16.3, 3.7
					y (Transversal)	1.10	-45.19	-50.51	0.91	46.29	T4	9.2, -22.1, 3.7
			64QAM	54 Mbps	z (Axial)	9.62	-38.11	-49.92	1.12	47.73	T4	15.8, -16.7, 3.7
					y (Transversal)	1.35	-45.06	-50.51	1.19	46.41	T4	11.3, -25, 3.7
802.11n EVS: 5.9	6 2437 MHz	ANT 4	MCS0	6.5 Mbps	z (Axial)	8.35	-39.15	-49.92	1.20	47.50	T4	16.7, -18.3, 3.7
					y (Transversal)	1.96	-44.63	-50.51	0.72	46.59	T4	12.9, -8.3, 3.7
			MCS3	26 Mbps	z (Axial)	8.25	-39.29	-49.92	0.98	47.54	T4	16.7, -18.2, 3.7
					y (Transversal)	2.09	-44.62	-50.51	0.71	46.71	T4	13.1, -8.2, 3.7
			MCS7	65 Mbps	z (Axial)	7.55	-39.60	-49.92	1.14	47.15	T4	16.7, -18.2, 3.7
					y (Transversal)	1.57	-43.55	-50.51	1.38	45.12	T4	13.1, -8.2, 3.7
802.11ac EVS: 5.9	6 2437 MHz	ANT 4	MCS0	6.5 Mbps	z (Axial)	6.80	-40.83	-49.92	1.73	47.63	T4	9.2, -20, 3.7
					y (Transversal)	1.85	-44.44	-50.51	1.05	46.29	T4	14.2, -22.1, 3.7
			MCS3	26 Mbps	z (Axial)	5.12	-41.77	-49.92	0.74	46.89	T4	9.3, -20, 3.7
					y (Transversal)	1.85	-43.84	-50.51	1.03	45.69	T4	14.1, -22.1, 3.7
			MCS7	65 Mbps	z (Axial)	5.94	-42.45	-49.92	0.49	48.39	T4	9.3, -20, 3.7
					y (Transversal)	2.00	-42.74	-50.51	1.06	**44.74**	T4	14.1, -22.1, 3.7
802.11ax EVS: 5.9	6 2437 MHz	ANT 4	MCS0	7.3 Mbps	z (Axial)	11.06	-36.69	-49.92	0.89	47.75	T4	13.3, -17.9, 3.7
					y (Transversal)	0.83	-44.17	-50.51	1.31	45.00	T4	13.8, -10, 3.7
			MCS5	58.5 Mbps	z (Axial)	9.47	-38.51	-49.92	0.92	47.98	T4	13.3, -17.9, 3.7
					y (Transversal)	2.73	-43.62	-50.51	1.18	46.35	T4	13.6, -9.9, 3.7
			MCS9	97.5 Mbps	z (Axial)	10.73	-38.91	-49.92	0.61	49.64	T4	13.3, -17.9, 3.7
					y (Transversal)	2.41	-44.45	-50.51	0.63	46.86	T4	13.6, -9.9, 3.7

Note(s):

1. For all subsequent tests for 2.4 GHz, y (transversal) 802.11ac MCS7 65 Mbps was used in conjunction with the worst-case bit rate found in §9.1.4.

This report shall not be reproduced without the written approval of UL Verification Services Inc.

VoWi-Fi Air Interface Investigation (continued):

VoWi-Fi Air Interface Investigation												
Mode:	Channel and Frequency	Antenna	Modulation/Index	Data Rate	Orientation	ABM1 dB(A/m)	ABM2 dB(A/m)	Ambient Noise dB(A/m)	Freq. Response (dB)	ABM SNR (dB)	T-Rating	Location
802.11a EVS: 5.9	36 5180 MHz	ANT 6	BPSK	6 Mbps	z (Axial)	6.85	-39.05	-49.92	0.34	45.90	T4	10.4, -12.5, 3.7
					y (Transversal)	1.74	-43.51	-50.51	0.66	45.25	T4	11.7, -7.9, 3.7
			QPSK	18 Mbps	z (Axial)	7.89	-40.74	-49.92	0.98	48.63	T4	10.5, -12.5, 3.7
					y (Transversal)	2.41	-44.63	-50.51	0.63	47.04	T4	11.6, -7.8, 3.7
			64QAM	54 Mbps	z (Axial)	5.05	-41.43	-49.92	1.18	46.48	T4	10.5, -12.5, 3.7
					y (Transversal)	1.91	-44.58	-50.51	0.59	46.49	T4	11.6, -7.8, 3.7
802.11n 20 MHz EVS: 5.9	36 5180 MHz	ANT 6	MCS0	6.5 Mbps	z (Axial)	6.76	-41.55	-49.92	0.54	48.31	T4	10.5, -12.5, 3.7
					y (Transversal)	-1.45	-44.16	-50.51	0.79	42.71	T4	11.6, -7.8, 3.7
			MCS3	26 Mbps	z (Axial)	6.00	-41.29	-49.92	0.94	47.29	T4	10.5, -12.5, 3.7
					y (Transversal)	-2.27	-44.59	-50.51	0.53	**42.32**	T4	11.6, -7.8, 3.7
			MCS7	65 Mbps	z (Axial)	4.56	-41.32	-49.92	1.58	45.88	T4	10.5, -12.5, 3.7
					y (Transversal)	-1.39	-44.86	-50.51	0.36	43.47	T4	11.6, -7.8, 3.7
802.11n 40 MHz EVS: 5.9	38 5190 MHz	ANT 6	MCS0	13.5 Mbps	z (Axial)	6.27	-40.88	-49.92	1.14	47.15	T4	10.5, -12.5, 3.7
					y (Transversal)	1.03	-45.65	-50.51	1.31	46.68	T4	7.9, -7.9, 3.7
			MCS3	54 Mbps	z (Axial)	6.80	-39.89	-49.92	1.01	46.69	T4	10.4, -20.4, 3.7
					y (Transversal)	-3.14	-46.31	-50.51	0.70	43.17	T4	8.1, -7.9, 3.7
			MCS7	135 Mbps	z (Axial)	5.46	-41.45	-49.92	0.63	46.91	T4	7.5, -12.9, 3.7
					y (Transversal)	1.83	-45.16	-50.51	0.78	46.99	T4	11.6, -7.8, 3.7
802.11ac 20 MHz EVS: 5.9	36 5180 MHz	ANT 6	MCS0	6.5 Mbps	z (Axial)	7.29	-39.42	-49.92	1.29	46.71	T4	8.3, -15, 3.7
					y (Transversal)	2.66	-42.75	-50.51	1.05	45.41	T4	12.9, -8.3, 3.7
			MCS4	39 Mbps	z (Axial)	4.77	-42.56	-49.92	0.57	47.33	T4	8.3, -15, 3.7
					y (Transversal)	-0.56	-43.80	-50.51	1.32	43.24	T4	12.9, -8.3, 3.7
			MCS8	78 Mbps	z (Axial)	6.74	-40.99	-49.92	0.53	47.73	T4	8.3, -15, 3.7
					y (Transversal)	1.72	-43.15	-50.51	1.19	44.87	T4	12.9, -8.3, 3.7
802.11ac 40 MHz EVS: 5.9	38 5190 MHz	ANT 6	MCS0	13.5 Mbps	z (Axial)	6.31	-41.71	-49.92	0.59	48.02	T4	8.3, -15, 3.7
					y (Transversal)	-0.38	-42.74	-50.51	1.00	42.36	T4	12.9, -8.3, 3.7
			MCS5	108 Mbps	z (Axial)	7.35	-42.64	-49.92	0.36	49.99	T4	8.2, -15.3, 3.7
					y (Transversal)	2.64	-43.14	-50.51	0.96	45.78	T4	12.7, -8.3, 3.7
			MCS9	180 Mbps	z (Axial)	5.33	-42.60	-49.92	1.47	47.93	T4	8.2, -15.3, 3.7
					y (Transversal)	1.96	-45.06	-50.51	0.84	47.02	T4	16.3, -8.8, 3.7
802.11ac 80 MHz EVS: 5.9	42 5210 MHz	ANT 6	MCS0	13.5 Mbps	z (Axial)	6.72	-42.47	-49.92	0.72	49.19	T4	8.2, -15.3, 3.7
					y (Transversal)	-0.84	-45.61	-50.55	0.93	44.77	T4	12.7, -8.3, 3.7
			MCS5	108 Mbps	z (Axial)	7.93	-40.24	-49.92	0.63	48.17	T4	9.2, -16.7, 3.7
					y (Transversal)	-1.34	-45.39	-50.55	0.99	44.05	T4	12.7, -8.3, 3.7
			MCS9	180 Mbps	z (Axial)	7.97	-39.56	-49.92	1.24	47.53	T4	11.3, -19.6, 3.7
					y (Transversal)	2.29	-45.96	-50.55	0.75	48.25	T4	12.7, -8.3, 3.7
802.11ax 20 MHz EVS: 5.9	36 5180 MHz	ANT 6	MCS0	8.6 Mbps	z (Axial)	10.34	-37.59	-49.92	1.12	47.93	T4	11.7, -15, 3.7
					y (Transversal)	2.00	-44.72	-50.55	1.03	46.72	T4	13.3, -21.3, 3.7
			MCS6	77 Mbps	z (Axial)	10.78	-37.39	-49.92	0.40	48.17	T4	11.6, -15.2, 3.7
					y (Transversal)	2.58	-44.92	-50.55	1.16	47.50	T4	13.4, -21.4, 3.7
			MCS11	143 Mbps	z (Axial)	7.90	-39.46	-49.92	1.08	47.36	T4	11.6, -15.2, 3.7
					y (Transversal)	1.71	-43.56	-50.55	0.81	45.27	T4	13.4, -21.4, 3.7
802.11ax 40 MHz EVS: 5.9	38 5190 MHz	ANT 6	MCS0	17.2 Mbps	z (Axial)	9.32	-38.56	-49.92	0.98	47.88	T4	12.9, -13.8, 3.7
					y (Transversal)	1.73	-45.09	-50.55	1.34	46.82	T4	17.1, -7.9, 3.7
			MCS6	155 Mbps	z (Axial)	8.73	-38.02	-49.92	0.73	46.75	T4	12.7, -13.5, 3.7
					y (Transversal)	1.60	-44.47	-50.55	0.74	46.07	T4	17, -7.9, 3.7
			MCS11	287 Mbps	z (Axial)	8.84	-39.79	-49.92	0.59	48.63	T4	12.7, -13.5, 3.7
					y (Transversal)	0.80	-44.18	-50.55	0.99	44.98	T4	17, -7.9, 3.7
802.11ax 80 MHz EVS: 5.9	42 5210 MHz	ANT 6	MCS0	36 Mbps	z (Axial)	7.73	-40.01	-49.92	0.57	47.74	T4	15.8, -12.1, 3.7
					y (Transversal)	0.47	-45.96	-50.55	0.90	46.43	T4	15.9, -12.1, 3.7
			MCS6	324 Mbps	z (Axial)	7.37	-41.51	-49.92	0.84	48.88	T4	15.9, -12.1, 3.7
					y (Transversal)	0.05	-45.38	-50.55	1.00	45.43	T4	8.6, -7.1, 3.7
			MCS11	600 Mbps	z (Axial)	6.34	-43.23	-49.92	0.82	49.57	T4	15.9, -12.1, 3.7
					y (Transversal)	0.04	-46.81	-50.55	1.24	46.85	T4	8.6, -7.1, 3.7

Note(s):

1. For all subsequent tests for 5 GHz, y (transversal) 802.11n HT20 MHz MCS3 26 Mbps was used in conjunction with the worst-case bit rate found in §9.1.4.

This report shall not be reproduced without the written approval of UL Verification Services Inc.

9.2. OTT Application

9.2.1. Antenna Investigation

Mode:	Channel and Frequency	Bandwidth (Data Rate)	Antenna	Orientation	ABM1 dB(A/m)	ABM2 dB(A/m)	Ambient Noise dB(A/m)	Freq. Response (dB)	ABM SNR (dB)	T-Rating	Plot Page #
GSM 1900 EDGE/EGPRS 2 Slot(s) ACC-ELD: 16 kbps	661 1880 MHz	N/A	Port A	z (Axial)	10.88	-39.50	-55.83	1.88	50.38	T4	1 - 4
				y (Transversal)	0.56	-44.79	-55.88	1.82	45.35	T4	
			Port B	z (Axial)	10.42	-38.44	-55.83	1.16	48.86	T4	5 - 8
				y (Transversal)	0.59	-44.39	-55.88	1.98	44.98	T4	
			Port C	z (Axial)	11.48	-35.81	-55.83	0.97	47.29	T4	9 - 12
				y (Transversal)	2.18	-36.69	-55.88	1.85	**38.87**	T4	
			Port D	z (Axial)	8.78	-43.80	-55.83	1.44	52.58	T4	13 - 16
				y (Transversal)	3.65	-51.80	-55.88	2.00	55.45	T4	
W-CDMA BII HSPA ACC-ELD: 16 kbps	9400 1880 MHz	N/A	Port A	z (Axial)	10.28	-53.38	-55.91	2.00	63.66	T4	25 - 28
				y (Transversal)	3.75	-54.16	-55.88	2.00	57.91	T4	
			Port B	z (Axial)	10.12	-53.49	-55.91	1.88	63.61	T4	29 - 32
				y (Transversal)	3.68	-54.19	-55.88	2.00	57.87	T4	
			Port C	z (Axial)	10.01	-53.50	-55.91	1.95	63.51	T4	33 - 36
				y (Transversal)	3.69	-54.12	-55.88	2.00	57.81	T4	
			Port D	z (Axial)	10.04	-53.89	-55.91	1.88	63.93	T4	37 - 40
				y (Transversal)	3.66	-54.08	-55.88	2.00	**57.74**	T4	
LTE Band 25 QPSK 1/49 RB ACC-ELD: 16 kbps	26365 1882.5 MHz	20 MHz	Port A	z (Axial)	9.66	-48.47	-55.86	1.84	58.13	T4	41 - 44
				y (Transversal)	3.72	-49.89	-55.85	1.88	53.61	T4	
			Port B	z (Axial)	8.87	-46.70	-55.86	1.73	55.57	T4	45 - 48
				y (Transversal)	3.73	-46.97	-55.85	1.87	50.70	T4	
			Port C	z (Axial)	9.80	-47.04	-55.86	1.87	56.84	T4	49 - 52
				y (Transversal)	3.75	-48.89	-55.85	1.86	52.64	T4	
			Port D	z (Axial)	9.83	-45.53	-55.86	1.80	55.36	T4	53 - 56
				y (Transversal)	1.92	-47.68	-55.85	1.91	**49.60**	T4	
LTE Band 41 QPSK 1/49 RB ACC-ELD: 16 kbps	40620 2593 MHz	20 MHz	Port A	z (Axial)	12.92	-46.34	-55.85	2.00	59.26	T4	57 - 60
				y (Transversal)	4.50	-52.26	-55.83	1.94	56.76	T4	
			Port B	z (Axial)	11.24	-43.48	-55.85	1.82	54.72	T4	61 - 64
				y (Transversal)	4.07	-49.43	-55.83	1.87	**53.50**	T4	
			Port C	z (Axial)	11.55	-44.31	-55.85	1.85	55.86	T4	65 - 68
				y (Transversal)	4.06	-51.56	-55.83	1.76	55.62	T4	
			Port D	z (Axial)	11.47	-44.13	-55.85	1.75	55.60	T4	69 - 72
				y (Transversal)	4.02	-50.05	-55.83	1.86	54.07	T4	
802.11b ACC-ELD: 31 kbps	6 2437 MHz	20 MHz (1 Mbps)	ANT 3	z (Axial)	13.21	-39.40	-50.01	1.74	52.61	T4	73 - 76
				y (Transversal)	5.35	-45.70	-50.50	1.76	51.05	T4	
			ANT 4	z (Axial)	12.42	-39.85	-50.01	1.87	52.27	T4	77 - 80
				y (Transversal)	4.98	-45.82	-50.50	1.98	**50.80**	T4	
802.11a ACC-ELD: 31 kbps	36 5180 MHz	20 MHz (6 Mbps)	ANT 5	z (Axial)	11.87	-40.24	-50.05	1.88	52.11	T4	81 - 84
				y (Transversal)	4.54	-46.06	-50.55	2.00	50.60	T4	
			ANT 6	z (Axial)	12.32	-39.95	-50.05	1.83	52.27	T4	85 - 88
				y (Transversal)	4.33	-46.22	-50.55	1.86	**50.55**	T4	

Note(s):

7. Port C has been determined to be the worst-case antenna for EDGE (GSM) above 1 GHz frequency bands and Port B for below 1GHz.
8. Port D has been determined to be the worst-case antenna for HSPA (W-CDMA) above 1 GHz frequency bands and Port B for below 1GHz.
9. Port D has been determined to be the worst-case antenna for LTE-FDD above 1 GHz frequency bands and Port B for below 1GHz.
10. Port B has been determined to be the worst-case antenna for LTE-TDD.
11. ANT 4 has been determined to be the worst-case antenna for Wi-Fi 2.4 GHz.
12. ANT 6 has been determined to be the worst-case antenna for Wi-Fi 5 GHz.

This report shall not be reproduced without the written approval of UL Verification Services Inc.

9.2.2. Codec Investigation

The OTT Application did not support a means for the test lab to change the codec's bit rates. When a VoIP call was established, the test lab recorded the bit rate used during that session, listed below, for the supported technologies: EDGE, HSPA, LTE/5G NR, Wi-Fi 2.4 GHz, and Wi-Fi 5 GHz

Codec Bit Rate (kbps)		
GSM	EDGE	16
W-CDMA	HSPA	16
LTE	FDD	16
	TDD	16
Wi-Fi 2.4 GHz	802.11b	31
	802.11g	31
	802.11n	31
	802.11ax	31
Wi-Fi 5 GHz	802.11a	31
	802.11n HT20	31
	802.11n HT40	31
	802.11ac VHT20	31
	802.11ac VHT40	31
	802.11ac VHT80	31
	802.11ax HE20	31
	802.11ax HE40	31
	802.11ax HE80	31

This report shall not be reproduced without the written approval of UL Verification Services Inc.

9.2.3. Air Interface Investigation

A limited set of bands/channels/bandwidths were then tested to confirm that there is no effect to the T-rating when changing the band/channel/bandwidth.

GSM Air Interface Investigation:

GSM Air Interface Investigation											
Mode:	Antenna	Channel and Frequency	Bandwidth (if applicable)	Orientation	ABM1 dB(A/m)	ABM2 dB(A/m)	Ambient Noise dB(A/m)	Freq. Response (dB)	ABM SNR (dB)	T-Rating	Location
GSM 1900 EDGE/EGPRS 2 Slot(s) ACC-ELD: 16 kbps	Port C	512 1850.2 MHz	N/A	z (Axial)	12.66	-46.47	-55.86	0.66	59.13	T4	17.1, -16.7, 3.7
				y (Transversal)	3.87	-49.40	-55.85	0.64	53.27	T4	21.3, -11.7, 3.7
		661 1880 MHz	N/A	z (Axial)	11.48	-35.81	-55.83	0.97	47.29	T4	16.7, -9.2, 3.7
				y (Transversal)	2.18	-36.69	-55.88	1.85	**38.87**	T4	17.5, -13.8, 3.7
		810 1909.8 MHz	N/A	z (Axial)	13.64	-50.00	-55.86	1.92	63.64	T4	15, -15.8, 3.7
				y (Transversal)	4.92	-51.39	-55.85	1.88	56.31	T4	15, -9.2, 3.7

Note(s):

For all subsequent tests for GSM, y (transversal) middle channel was used in conjunction with the worst-case bit rate found in §9.2.2.

W-CDMA Air Interface Investigation:

W-CDMA Air Interface Investigation											
Mode:	Antenna	Channel and Frequency	Bandwidth (if applicable)	Orientation	ABM1 dB(A/m)	ABM2 dB(A/m)	Ambient Noise dB(A/m)	Freq. Response (dB)	ABM SNR (dB)	T-Rating	Location
W-CDMA BII HSPA ACC-ELD: 16 kbps	Port D	9262 1852.4 MHz	N/A	z (Axial)	10.03	-53.82	-55.91	1.95	63.85	T4	12.5, -16.5, 3.7
				y (Transversal)	3.72	-53.95	-55.88	2.00	57.67	T4	16.2, -10.2, 3.7
		9400 1880.0 MHz	N/A	z (Axial)	10.04	-53.89	-55.91	1.88	63.93	T4	12.5, -16.5, 3.7
				y (Transversal)	3.66	-54.08	-55.88	2.00	57.74	T4	16.2, -10.2, 3.7
		9538 1907.6 MHz	N/A	z (Axial)	10.09	-53.72	-55.91	1.82	63.81	T4	12.5, -16.5, 3.7
				y (Transversal)	3.78	-53.59	-55.88	2.00	**57.37**	T4	16.2, -10.2, 3.7

Note(s):

For all subsequent tests for W-CDMA, y (transversal) high channel was used in conjunction with the worst-case bit rate found in §9.2.2.

This report shall not be reproduced without the written approval of UL Verification Services Inc.

LTE Air Interface Investigation:

LTE Air Interface Investigation													
Mode:	Bandwidth (if applicable)	Antenna	Channel and Frequency	RB Allocation		Orientation	ABM1 dB(A/m)	ABM2 dB(A/m)	Ambient Noise dB(A/m)	Freq. Response (dB)	ABM SNR (dB)	T-Rating	Location
LTE Band 25 QPSK ACC-ELD: 16 kbps	20 MHz	Port D	26140 1860 MHz	100	0	z (Axial)	9.90	-47.01	-55.86	1.65	56.91	T4	13.1, -13.1, 3.7
						y (Transversal)	1.79	-49.36	-55.85	1.94	51.15	T4	10.3, -8.1, 3.7
			26365 1882.5 MHz	1	0	z (Axial)	9.83	-47.16	-55.86	1.77	56.99	T4	13.1, -13.1, 3.7
						y (Transversal)	1.79	-50.32	-55.85	1.87	52.11	T4	10.3, -8.1, 3.7
				1	49	z (Axial)	9.83	-45.53	-55.86	1.80	55.36	T4	13.1, -13.1, 3.7
						y (Transversal)	1.92	-47.68	-55.85	1.91	49.60	T4	10.4, -8.3, 3.7
				1	99	z (Axial)	9.89	-46.76	-55.86	1.89	56.65	T4	13.1, -13.1, 3.7
						y (Transversal)	1.76	-49.33	-55.85	1.76	51.09	T4	10.3, -8.1, 3.7
				50	0	z (Axial)	9.85	-44.77	-55.86	1.72	54.62	T4	13.1, -13.1, 3.7
						y (Transversal)	1.78	-47.99	-55.85	1.83	49.77	T4	10.3, -8.1, 3.7
				50	24	z (Axial)	9.87	-46.99	-55.86	1.86	56.86	T4	13.1, -13.1, 3.7
						y (Transversal)	1.76	-49.50	-55.85	1.77	51.26	T4	10.3, -8.1, 3.7
				50	49	z (Axial)	9.92	-46.61	-55.86	1.75	56.53	T4	13.1, -13.1, 3.7
						y (Transversal)	1.77	-49.43	-55.85	1.77	51.20	T4	10.3, -8.1, 3.7
				100	0	z (Axial)	9.89	-47.12	-55.86	1.81	57.01	T4	13.1, -13.1, 3.7
						y (Transversal)	1.81	-47.73	-55.85	1.92	**49.54**	T4	10.3, -8.1, 3.7
			26590 1905 MHz	100	0	z (Axial)	9.88	-47.08	-55.86	1.75	56.96	T4	13.1, -13.1, 3.7
						y (Transversal)	1.77	-49.27	-55.85	1.62	51.04	T4	10.3, -8.1, 3.7
LTE Band 25 16QAM ACC-ELD: 16 kbps	20 MHz	Port D	26365 1882.5 MHz	100	0	z (Axial)	9.41	-46.85	-55.86	1.76	56.26	T4	12.9, -12.9, 3.7
						y (Transversal)	3.63	-47.53	-55.85	1.88	51.16	T4	12.5, -9.7, 3.7
LTE Band 25 64QAM ACC-ELD: 16 kbps	20 MHz	Port D	26365 1882.5 MHz	100	0	z (Axial)	9.51	-47.18	-55.86	1.79	56.69	T4	12.8, -13, 3.7
						y (Transversal)	3.58	-47.63	-55.85	1.94	51.21	T4	12.3, -9.6, 3.7
LTE Band 25 256QAM ACC-ELD: 16 kbps	20 MHz	Port D	26365 1882.5 MHz	100	0	z (Axial)	9.43	-47.83	-55.86	1.80	57.26	T4	12.8, -13, 3.7
						y (Transversal)	3.52	-47.86	-55.85	1.89	51.38	T4	12.3, -9.6, 3.7
LTE Band 25 QPSK ACC-ELD: 16 kbps	15 MHz	Port D	26365 1882.5 MHz	75	0	z (Axial)	9.48	-46.90	-55.86	1.65	56.38	T4	12.8, -13, 3.7
						y (Transversal)	3.51	-47.60	-55.85	1.91	51.11	T4	12.3, -9.6, 3.7
LTE Band 25 QPSK ACC-ELD: 16 kbps	10 MHz	Port D	26365 1882.5 MHz	50	0	z (Axial)	9.48	-46.88	-55.86	1.67	56.36	T4	12.8, -13, 3.7
						y (Transversal)	3.53	-47.85	-55.85	1.91	51.38	T4	12.3, -9.6, 3.7

Note(s):

For all subsequent tests for LTE-FDD, y (transversal) middle channel, QPSK modulation, and 100% RB size was used in conjunction with the worst-case bit rate found in §9.2.2.

This report shall not be reproduced without the written approval of UL Verification Services Inc.

LTE Air Interface Investigation (continued):

LTE Air Interface Investigation													
Mode:	Bandwidth (if applicable)	Antenna	Channel and Frequency	RB Allocation		Orientation	ABM1 dB(A/m)	ABM2 dB(A/m)	Ambient Noise dB(A/m)	Freq. Response (dB)	ABM SNR (dB)	T-Rating	Location
LTE Band 41 QPSK ACC-ELD: 16 kbps	20 MHz	Port B	39750 2506 MHz	50	49	z (Axial)	11.39	-43.53	-55.85	1.73	54.92	T4	20.2, -15.1, 3.7
						y (Transversal)	3.95	-49.41	-55.83	1.86	53.36	T4	16.4, -7.2, 3.7
			40185 2549.5 MHz	50	49	z (Axial)	11.43	-43.67	-55.85	1.80	55.10	T4	20.2, -15.1, 3.7
						y (Transversal)	3.94	-49.53	-55.83	1.87	53.47	T4	16.4, -7.2, 3.7
			40620 2593 MHz	1	0	z (Axial)	11.38	-43.63	-55.85	1.78	55.01	T4	20.2, -15.1, 3.7
						y (Transversal)	3.99	-49.96	-55.83	1.85	53.95	T4	16.4, -7.2, 3.7
				1	49	z (Axial)	11.24	-43.48	-55.85	1.82	54.72	T4	20.4, -15, 3.7
						y (Transversal)	4.07	-49.43	-55.83	1.87	53.50	T4	16.3, -7.2, 3.7
				1	99	z (Axial)	11.46	-43.35	-55.85	1.82	54.81	T4	20.2, -15.1, 3.7
						y (Transversal)	4.01	-49.49	-55.83	1.75	53.50	T4	16.4, -7.2, 3.7
				50	0	z (Axial)	11.36	-43.59	-55.85	1.89	54.95	T4	20.2, -15.1, 3.7
						y (Transversal)	3.98	-49.52	-55.83	1.85	53.50	T4	16.4, -7.2, 3.7
				50	24	z (Axial)	11.39	-43.56	-55.85	1.80	54.95	T4	20.2, -15.1, 3.7
						y (Transversal)	4.02	-49.60	-55.83	1.85	53.62	T4	16.4, -7.2, 3.7
				50	49	z (Axial)	11.39	-43.51	-55.85	1.73	54.90	T4	20.2, -15.1, 3.7
						y (Transversal)	4.00	-49.32	-55.83	1.68	53.32	T4	16.4, -7.2, 3.7
				100	0	z (Axial)	11.34	-43.41	-55.85	1.92	54.75	T4	20.2, -15.1, 3.7
						y (Transversal)	3.94	-49.50	-55.83	1.80	53.44	T4	16.4, -7.2, 3.7
			41055 2636.5 MHz	50	49	z (Axial)	11.43	-43.53	-55.85	1.84	54.96	T4	20.2, -15.1, 3.7
						y (Transversal)	4.04	-49.31	-55.83	1.77	53.35	T4	16.4, -7.2, 3.7
			41490 2680 MHz	50	49	z (Axial)	11.78	-39.71	-55.85	1.79	51.49	T4	16.7, -13.8, 3.7
						y (Transversal)	2.75	-49.41	-55.83	1.68	52.16	T4	12.5, -7.2, 3.7
LTE Band 41 16QAM ACC-ELD: 16 kbps	20 MHz	Port B	41490 2680 MHz	50	49	z (Axial)	10.94	-37.58	-55.85	1.72	48.52	T4	16.3, -12.9, 3.7
						y (Transversal)	2.84	-46.23	-55.83	1.67	49.07	T4	12.1, -7.9, 3.7
LTE Band 41 64QAM ACC-ELD: 16 kbps	20 MHz	Port B	41490 2680 MHz	50	49	z (Axial)	10.95	-35.22	-55.85	1.82	**46.17**	T4	16.5, -12.9, 3.7
						y (Transversal)	2.71	-44.35	-55.83	1.82	47.06	T4	12, -8.1, 3.7
LTE Band 41 256QAM ACC-ELD: 16 kbps	20 MHz	Port B	41490 2680 MHz	50	49	z (Axial)	10.89	-35.33	-55.85	1.77	46.22	T4	16.5, -12.9, 3.7
						y (Transversal)	2.66	-44.24	-55.83	1.86	46.90	T4	12, -8.1, 3.7
LTE Band 41 64QAM ACC-ELD: 16 kbps	15 MHz	Port B	41490 2680 MHz	36	39	z (Axial)	10.97	-35.29	-55.85	1.75	46.26	T4	16.5, -12.9, 3.7
						y (Transversal)	2.67	-44.21	-55.83	1.84	46.88	T4	12, -8.1, 3.7
LTE Band 41 64QAM ACC-ELD: 16 kbps	10 MHz	Port B	41490 2680 MHz	25	25	z (Axial)	10.97	-35.23	-55.85	1.83	46.20	T4	16.5, -12.9, 3.7
						y (Transversal)	2.71	-44.26	-55.83	1.88	46.97	T4	12, -8.1, 3.7

Note(s):

For all subsequent tests for LTE-TDD, z (Axial) high channel, 64QAM modulation, and 50% RB size and high RB allocation was used in conjunction with the worst-case bit rate found in §9.2.2.

This report shall not be reproduced without the written approval of UL Verification Services Inc.

Wi-Fi Air Interface Investigation:

Wi-Fi Air Interface Investigation												
Mode:	Channel and Frequency	Antenna	Modulation/Index	Data Rate	Orientation	ABM1 dB(A/m)	ABM2 dB(A/m)	Ambient Noise dB(A/m)	Freq. Response (dB)	ABM SNR (dB)	T-Rating	Location
802.11b ACC-ELD: 31 kbps	6 2437 MHz	ANT 4	DSSS	1 Mbps	z (Axial)	12.42	-39.85	-50.01	1.87	52.27	T4	10.4, -14.6, 3.7
					y (Transversal)	4.98	-45.82	-50.50	1.98	50.80	T4	11.3, -9.2, 3.7
			CCK	5.5 Mbps	z (Axial)	12.17	-40.08	-50.01	1.83	52.25	T4	10.4, -14.2, 3.7
					y (Transversal)	4.96	-45.83	-50.50	1.87	50.79	T4	12.1, -9.6, 3.7
				11 Mbps	z (Axial)	12.56	-39.57	-50.01	2.00	52.13	T4	10.6, -14.2, 3.7
					y (Transversal)	5.24	-45.62	-50.50	1.82	50.86	T4	11.9, -9.5, 3.7
802.11g ACC-ELD: 31 kbps	6 2437 MHz	ANT 4	DSSS	1 Mbps	z (Axial)	12.90	-39.59	-50.01	1.91	52.49	T4	10.4, -16.3, 3.7
					y (Transversal)	4.56	-45.94	-50.50	1.83	50.50	T4	10, -21.7, 3.7
			QPSK	12 Mbps	z (Axial)	12.92	-39.41	-50.01	1.97	52.33	T4	10.5, -16.3, 3.7
					y (Transversal)	4.62	-46.02	-50.50	1.97	50.64	T4	10.1, -21.7, 3.7
			64QAM	54 Mbps	z (Axial)	12.91	-39.48	-50.01	2.00	52.39	T4	10.5, -16.3, 3.7
					y (Transversal)	4.61	-45.97	-50.50	1.90	50.58	T4	10.1, -21.7, 3.7
802.11n ACC-ELD: 31 kbps	6 2437 MHz	ANT 4	MCS0	6.5 Mbps	z (Axial)	10.47	-41.22	-50.05	1.86	51.69	T4	10.4, -13.8, 3.7
					y (Transversal)	4.57	-45.04	-50.55	1.77	49.61	T4	15.4, -8.8, 3.7
			MCS3	26 Mbps	z (Axial)	10.55	-40.99	-50.05	1.84	51.54	T4	10.3, -13.7, 3.7
					y (Transversal)	4.61	-43.77	-50.55	1.98	**48.38**	T4	15.5, -8.5, 3.7
			MCS7	65 Mbps	z (Axial)	10.32	-41.36	-50.05	1.90	51.68	T4	10.3, -13.7, 3.7
					y (Transversal)	4.66	-44.46	-50.55	1.86	49.12	T4	15.5, -8.5, 3.7
802.11ac ACC-ELD: 31 kbps	6 2437 MHz	ANT 4	MCS0	6.5 Mbps	z (Axial)	11.11	-41.01	-50.05	1.93	52.12	T4	10.4, -14.6, 3.7
					y (Transversal)	3.38	-45.94	-50.55	1.93	49.32	T4	9.6, -7.9, 3.7
			MCS3	26 Mbps	z (Axial)	11.27	-39.88	-50.05	1.84	51.15	T4	10.3, -14.8, 3.7
					y (Transversal)	3.32	-46.22	-50.55	1.86	49.54	T4	9.6, -7.8, 3.7
			MCS7	65 Mbps	z (Axial)	11.26	-40.30	-50.05	1.94	51.56	T4	10.3, -14.8, 3.7
					y (Transversal)	3.11	-45.93	-50.55	1.79	49.04	T4	9.6, -7.8, 3.7
802.11ax ACC-ELD: 31 kbps	6 2437 MHz	ANT 4	MCS0	7.3 Mbps	z (Axial)	10.93	-40.75	-50.05	1.80	51.68	T4	10.4, -14.2, 3.7
					y (Transversal)	3.38	-45.57	-50.55	1.90	48.95	T4	9.6, -7.9, 3.7
			MCS5	58.5 Mbps	z (Axial)	10.07	-41.22	-50.05	1.78	51.29	T4	10.5, -14, 3.7
					y (Transversal)	3.37	-47.05	-50.55	1.86	50.42	T4	9.6, -8, 3.7
			MCS9	97.5 Mbps	z (Axial)	10.78	-41.27	-50.05	1.72	52.05	T4	10.5, -14, 3.7
					y (Transversal)	2.16	-46.80	-50.55	1.85	48.96	T4	9.6, -8, 3.7

Note(s):

1. For all subsequent tests for 2.4 GHz, y (transversal) 802.11n MCS3 26 Mbps was used in conjunction with the worst-case bit rate found in §9.2.2.

This report shall not be reproduced without the written approval of UL Verification Services Inc.

Wi-Fi Air Interface Investigation (continued):

Wi-Fi Air Interface Investigation												
Mode:	Channel and Frequency	Antenna	Modulation/Index	Data Rate	Orientation	ABM1 dB(A/m)	ABM2 dB(A/m)	Ambient Noise dB(A/m)	Freq. Response (dB)	ABM SNR (dB)	T-Rating	Location
802.11a ACC-ELD: 31 kbps	36 5180 MHz	ANT 6	BPSK	6 Mbps	z (Axial)	12.32	-39.95	-50.05	1.83	52.27	T4	11.3, -15.4, 3.7
					y (Transversal)	4.33	-46.22	-50.55	1.86	50.55	T4	14.6, -10, 3.7
			QPSK	18 Mbps	z (Axial)	11.90	-40.36	-50.05	1.87	52.26	T4	11.7, -14.2, 3.7
					y (Transversal)	4.73	-46.05	-50.55	1.97	50.78	T4	13.8, -9.2, 3.7
			64QAM	54 Mbps	z (Axial)	12.13	-40.15	-50.05	1.97	52.28	T4	12.1, -14.2, 3.7
					y (Transversal)	4.37	-46.27	-50.55	1.90	50.64	T4	13.3, -10, 3.7
802.11n 20 MHz BW ACC-ELD: 31 kbps	36 5180 MHz	ANT 6	MCS0	6.5 Mbps	z (Axial)	11.63	-40.33	-50.05	1.88	51.96	T4	11.3, -14.2, 3.7
					y (Transversal)	4.35	-45.57	-50.55	1.89	49.92	T4	11.7, -9.2, 3.7
			MCS3	26 Mbps	z (Axial)	11.78	-40.12	-50.05	1.89	51.90	T4	11.3, -14.3, 3.7
					y (Transversal)	4.54	-45.56	-50.55	1.86	50.10	T4	11.9, -9.4, 3.7
			MCS7	65 Mbps	z (Axial)	11.76	-40.29	-50.05	1.90	52.05	T4	11.3, -14.3, 3.7
					y (Transversal)	4.59	-45.68	-50.55	1.91	50.27	T4	11.9, -9.4, 3.7
802.11n 40 MHz BW ACC-ELD: 31 kbps	38 5190 MHz	ANT 6	MCS0	13.5 Mbps	z (Axial)	11.72	-40.37	-50.05	1.93	52.09	T4	10.8, -15, 3.7
					y (Transversal)	4.34	-45.59	-50.55	1.93	49.93	T4	12.1, -9.6, 3.7
			MCS3	54 Mbps	z (Axial)	11.91	-39.99	-50.05	1.88	51.90	T4	11, -15, 3.7
					y (Transversal)	4.63	-45.61	-50.55	1.91	50.24	T4	12, -9.5, 3.7
			MCS7	135 Mbps	z (Axial)	11.92	-40.18	-50.05	1.84	52.10	T4	11, -15, 3.7
					y (Transversal)	4.66	-45.27	-50.55	1.99	49.93	T4	12, -9.5, 3.7
802.11ac 20 MHz BW ACC-ELD: 31 kbps	36 5180 MHz	ANT 6	MCS0	6.5 Mbps	z (Axial)	12.01	-40.02	-50.05	2.00	52.03	T4	10.8, -15.4, 3.7
					y (Transversal)	4.27	-46.10	-50.55	1.92	50.37	T4	12.5, -10, 3.7
			MCS4	39 Mbps	z (Axial)	12.03	-39.92	-50.05	1.95	51.95	T4	10.8, -15.5, 3.7
					y (Transversal)	4.69	-46.03	-50.55	1.95	50.72	T4	12.5, -10, 3.7
			MCS8	78 Mbps	z (Axial)	11.98	-40.03	-50.05	1.85	52.01	T4	10.8, -15.5, 3.7
					y (Transversal)	4.66	-45.68	-50.55	1.90	50.34	T4	12.5, -10, 3.7
802.11ac 40 MHz BW ACC-ELD: 31 kbps	38 5190 MHz	ANT 6	MCS0	13.5 Mbps	z (Axial)	11.40	-40.58	-50.05	1.72	51.98	T4	10.4, -15, 3.7
					y (Transversal)	3.74	-46.38	-50.55	1.83	50.12	T4	10, -8.3, 3.7
			MCS5	108 Mbps	z (Axial)	11.52	-40.44	-50.05	1.99	51.96	T4	10.4, -15.2, 3.7
					y (Transversal)	3.66	-46.43	-50.55	1.80	50.09	T4	10, -8.5, 3.7
			MCS9	180 Mbps	z (Axial)	11.48	-40.51	-50.05	1.85	51.99	T4	10.4, -15.2, 3.7
					y (Transversal)	3.68	-46.26	-50.55	1.94	49.94	T4	10, -8.5, 3.7
802.11ac 80 MHz BW ACC-ELD: 31 kbps	42 5210 MHz	ANT 6	MCS0	13.5 Mbps	z (Axial)	11.85	-40.22	-50.05	1.93	52.07	T4	11.3, -14.6, 3.7
					y (Transversal)	4.27	-45.68	-50.55	1.86	49.95	T4	11.7, -9.2, 3.7
			MCS5	108 Mbps	z (Axial)	11.84	-40.19	-50.05	1.90	52.03	T4	11.3, -14.4, 3.7
					y (Transversal)	4.39	-45.78	-50.55	2.00	50.17	T4	11.6, -9.2, 3.7
			MCS9	180 Mbps	z (Axial)	11.82	-40.08	-50.05	1.81	51.90	T4	11.3, -14.4, 3.7
					y (Transversal)	4.52	-45.71	-50.55	1.93	50.23	T4	11.6, -9.2, 3.7
802.11ax 20 MHz BW ACC-ELD: 31 kbps	36 5180 MHz	ANT 6	MCS0	8.6 Mbps	z (Axial)	9.59	-41.06	-50.05	1.80	50.65	T4	9.6, -13.8, 3.7
					y (Transversal)	2.73	-45.58	-50.55	1.94	48.31	T4	8.8, -8.3, 3.7
			MCS6	77 Mbps	z (Axial)	9.83	-40.52	-50.05	2.00	50.35	T4	9.5, -13.8, 3.7
					y (Transversal)	2.60	-45.45	-50.55	1.89	**48.05**	T4	8.6, -8.1, 3.7
			MCS11	143 Mbps	z (Axial)	9.82	-40.67	-50.05	1.81	50.49	T4	9.5, -13.8, 3.7
					y (Transversal)	2.61	-45.57	-50.55	1.77	48.18	T4	8.6, -8.1, 3.7
802.11ax 40 MHz BW ACC-ELD: 31 kbps	38 5190 MHz	ANT 6	MCS0	17.2 Mbps	z (Axial)	9.79	-41.03	-50.05	2.00	50.82	T4	9.2, -14.6, 3.7
					y (Transversal)	3.02	-45.19	-50.55	1.90	48.21	T4	9.2, -8.3, 3.7
			MCS6	155 Mbps	z (Axial)	10.01	-40.68	-50.05	1.88	50.69	T4	9.2, -14.5, 3.7
					y (Transversal)	3.08	-45.50	-50.55	1.84	48.58	T4	9.2, -8.4, 3.7
			MCS11	287 Mbps	z (Axial)	10.00	-40.96	-50.05	1.89	50.96	T4	9.2, -14.5, 3.7
					y (Transversal)	3.02	-45.46	-50.55	1.88	48.48	T4	9.2, -8.4, 3.7
802.11ax 80 MHz BW ACC-ELD: 31 kbps	42 5210 MHz	ANT 6	MCS0	36 Mbps	z (Axial)	9.71	-41.05	-50.05	1.90	50.76	T4	9.2, -14.6, 3.7
					y (Transversal)	3.10	-45.13	-50.55	2.00	48.23	T4	9.2, -8.3, 3.7
			MCS6	324 Mbps	z (Axial)	9.97	-40.95	-50.05	1.82	50.92	T4	9.3, -14.4, 3.7
					y (Transversal)	2.97	-45.59	-50.55	1.77	48.56	T4	9, -8.4, 3.7
			MCS11	600 Mbps	z (Axial)	9.96	-40.89	-50.05	2.00	50.85	T4	9.3, -14.4, 3.7
					y (Transversal)	3.03	-45.42	-50.55	1.93	48.45	T4	9, -8.4, 3.7

Note(s):

2. For all subsequent tests for 5 GHz, y (transversal) 802.11ax HE20 MHz MCS6 77 Mbps was used in conjunction with the worst-case bit rate found in §9.2.2.

This report shall not be reproduced without the written approval of UL Verification Services Inc.

10. HAC (T-coil) Test Results

As the margin for the worst-case T-rating is greater than T3/T4, no further investigation is required into the technology's supported channels to affirm the T-rating.

10.1. CMRS

GSM/W-CDMA/CDMA CMRS Test Results:

Mode:	Channel and Frequency	Bandwidth (Data Rate)	Antenna	Orientation	ABM1 dB(A/m)	ABM2 dB(A/m)	Ambient Noise dB(A/m)	Freq. Response (dB)	ABM SNR (dB)	T-Rating	Location	Plot Page #
GSM 850 Voice Coder Speechcodec Low	190 836.6 MHz	N/A	Port B	z (Axial)								1 - 2
				y (Transversal)	7.51	-45.22	-54.03	2.00	52.73	T4	12.5, -3.3, 3.7	
*GSM 1900 Voice Coder Speechcodec Low	661 1880 MHz	N/A	Port C	z (Axial)								3 - 4
				y (Transversal)	3.26	-36.92	-54.06	1.76	**40.18**	T4	9, -3.1, 3.7	
*W-CDMA Band II Rel. 99 AMR-NB: 12.2	9400 1880 MHz	N/A	Port A	z (Axial)								5 - 6
				y (Transversal)	8.73	-46.08	-54.03	2.00	54.81	T4	13.1, -3.5, 3.7	
W-CDMA Band IV Rel. 99 AMR-NB: 12.2	1413 1732.6 MHz	N/A	Port A	z (Axial)								7 - 8
				y (Transversal)	9.18	-52.98	-54.03	2.00	62.16	T4	15.8, -3.3, 3.7	
W-CDMA Band V Rel. 99 AMR-NB: 12.2	4183 836.6 MHz	N/A	Port A	z (Axial)								9 - 10
				y (Transversal)	9.18	-53.09	-54.03	2.00	62.27	T4	15.8, -3.8, 3.7	

Note(s):

1. The radial longitudinal (x axis) measurements are no longer required per ANSI C63.19
2. "*" Denotes single point measurements, as per §7.4.4.2 of ANSI C63.19-2011.

This report shall not be reproduced without the written approval of UL Verification Services Inc.

VoLTE CMRS Test Results:

Mode:	Bandwidth (Data Rate)	Channel and Frequency	RB Allocation		Antenna	Orientation	ABM1 dB(A/m)	ABM2 dB(A/m)	Ambient Noise dB(A/m)	Freq. Response (dB)	ABM SNR (dB)	T-Rating	Location	Plot Page #
LTE Band 2 QPSK EVS: 24.4	20 MHz	18900 1880 MHz	50	0	Pord D	z (Axial)								11 - 12
						y (Transversal)	6.60	-48.57	-55.89	1.67	55.17	T4	15.8, -8.3, 3.7	
LTE Band 4 QPSK EVS: 24.4	20 MHz	20175 1732.5 MHz	50	0	Pord D	z (Axial)								13 - 14
						y (Transversal)	5.77	-49.57	-55.89	1.49	55.34	T4	14.6, -8.8, 3.7	
LTE Band 5 QPSK EVS: 24.4	10 MHz	20525 836.5 MHz	25	0	Pord D	z (Axial)								15 - 16
						y (Transversal)	6.21	-51.50	-55.89	1.78	57.71	T4	15.8, -9.2, 3.7	
LTE Band 7 QPSK EVS: 24.4	20 MHz	21100 2535 MHz	50	0	Pord D	z (Axial)								17 - 18
						y (Transversal)	5.02	-50.55	-55.89	1.71	55.57	T4	12.9, -8.3, 3.7	
LTE Band 12 QPSK EVS: 24.4	10 MHz	23095 707.5 MHz	25	0	Pord D	z (Axial)								19 - 20
						y (Transversal)	6.53	-51.17	-55.89	1.63	57.70	T4	16.3, -8.8, 3.7	
LTE Band 13 QPSK EVS: 24.4	10 MHz	23230 782 MHz	25	0	Pord D	z (Axial)								21 - 22
						y (Transversal)	6.33	-51.78	-55.89	1.77	58.11	T4	16.3, -9.6, 3.7	
LTE Band 17 QPSK EVS: 24.4	10 MHz	23790 710 MHz	25	0	Pord D	z (Axial)								23 - 24
						y (Transversal)	5.83	-49.19	-55.89	1.79	55.02	T4	14.6, -8.3, 3.7	
*LTE Band 25 QPSK EVS: 24.4	20 MHz	26365 1882.5 MHz	50	0	Pord D	z (Axial)								25 - 26
						y (Transversal)	4.85	-44.67	-55.89	1.81	49.52	T4	12.3, -8.3, 3.7	
LTE Band 26 QPSK EVS: 24.4	15 MHz	26865 831.5 MHz	36	0	Pord D	z (Axial)								27 - 28
						y (Transversal)	6.01	-52.02	-55.89	1.69	58.03	T4	15.8, -9.2, 3.7	
LTE Band 30 QPSK EVS: 24.4	10 MHz	27710 2310 MHz	25	0	Pord D	z (Axial)								29 - 30
						y (Transversal)	4.68	-51.53	-55.89	1.69	56.21	T4	12.9, -8.8, 3.7	
LTE Band 38 QPSK AMR-NB: 4.75	20 MHz	38000 2595 MHz	1	0	Port D	z (Axial)								31 - 32
						y (Transversal)	4.16	-48.05	-55.82	1.26	52.21	T4	12.9, -7.9, 3.7	
LTE Band 40 QPSK AMR-NB: 4.75	20 MHz	39150 2350 MHz	1	0	Port D	z (Axial)								33 - 34
						y (Transversal)	1.06	-45.54	-55.82	1.75	46.60	T4	8.8, -7.9, 3.7	
LTE Band 41 QPSK AMR-NB: 4.75	20 MHz	40620 2593 MHz	1	0	Port D	z (Axial)								35 - 36
						y (Transversal)	3.39	-44.71	-55.82	1.58	48.10	T4	11.3, -7.5, 3.7	
LTE Band 42 QPSK AMR-NB: 4.75	20 MHz	42590 3500 MHz	1	0	Port D	z (Axial)								37 - 38
						y (Transversal)	1.34	-45.09	-55.82	1.80	46.43	T4	9.2, -7.5, 3.7	
LTE Band 48 QPSK AMR-NB: 4.75	20 MHz	55990 3625 MHz	1	0	Port D	z (Axial)								39 - 40
						y (Transversal)	4.15	-43.99	-55.82	1.79	48.14	T4	11.7, -8.3, 3.7	
LTE Band 66 QPSK EVS: 24.4	20 MHz	132322 1745 MHz	50	0	Pord D	z (Axial)								41 - 42
						y (Transversal)	6.28	-51.51	-55.89	1.57	57.79	T4	16.3, -9.2, 3.7	

Note(s):

1. The radial longitudinal (x axis) measurements are no longer required per ANSI C63.19
2. "*" Denotes single point measurements, as per §7.4.4.2 of ANSI C63.19-2011.

This report shall not be reproduced without the written approval of UL Verification Services Inc.

VoWi-Fi CMRS Test Results:

Mode:	Channel and Frequency	Data Rate	Antenna	Orientation	ABM1 dB(A/m)	ABM2 dB(A/m)	Ambient Noise dB(A/m)	Freq. Response (dB)	ABM SNR (dB)	T-Rating	Location	Plot Page #
802.11ac EVS: 5.9	*6 2437 MHz	MCS7 65 Mbps	ANT 4	z (Axial)								43 - 44
				y (Transversal)	2.00	-42.74	-50.51	1.06	44.74	T4	14.1, -22.1, 3.7	
802.11n 20 MHz EVS: 5.9	*36 5180 MHz	MCS3 26 Mbps	ANT 6	z (Axial)								45 - 46
				y (Transversal)	-2.27	-44.59	-50.51	0.53	42.32	T4	11.6, -7.8, 3.7	
	52 5260 MHz	MCS3 26 Mbps	ANT 6	z (Axial)								47 - 48
				y (Transversal)	1.19	-45.37	-50.55	0.56	46.56	T4	10, -21.3, 3.7	
	100 5500 MHz	MCS3 26 Mbps	ANT 6	z (Axial)								49 - 50
				y (Transversal)	1.48	-45.15	-50.55	1.16	46.63	T4	10, -7.5, 3.7	
	149 5745 MHz	MCS3 26 Mbps	ANT 6	z (Axial)								51 - 52
				y (Transversal)	2.24	-44.15	-50.55	1.09	46.39	T4	12.1, -21.7, 3.7	

Note(s):

1. The radial longitudinal (x axis) measurements are no longer required per ANSI C63.19
2. "*" Denotes single point measurements, as per §7.4.4.2 of ANSI C63.19-2011.

This report shall not be reproduced without the written approval of UL Verification Services Inc.

5G Sub 6 (5GS6) VoNR CMRS Test Results – For PAG REUSE:

VoNR call uses the same protocol, codec, and reference level as VoLTE (i.e. -16 dBm0); therefore, testing was performed using the procedure listed in *KDB 285076 D03 HAC FAQ v01r05, A9*.

The DUT supports Stand-Alone FDD and TDD bands for NR transmission. For non-Stand-Alone NR bands, an initial EN-DC connection is needed to transmit. Two Stand-Alone bands (one FDD and one TDD) were selected for VoNR testing.

To determine the VoNR SNR rating, the following was performed:

1. Determine the VoLTE ABM1 value from an equivalent 4G LTE band, labeled $ABM1_{LTE}$.
2. Measure the ABM2 for the equivalent NR band, labeled $ABM2_{5GS6}$.
3. Calculate the SNR for VoNR: $(ABM1_{\mathrm{LTE}}/ABM2_{5\mathrm{GS6}}) - 3dB$

All data recorded within this test report for 5G NR was done with a simulated connection, i.e., a forced transmission using the manufacture's test tool. The signal was taken from an equivalent LTE-FDD and LTE-TDD VoLTE band. The noise was measured with a simulated Stand-Alone 5G connection (due to test equipment limitations), and the VoNR SNR was calculated using these two instances. If the calculated VoNR SNR is greater than VoLTE SNR, no further testing is deemed necessary. If VoNR is lower than VoLTE by more than 3dB, further testing will be required.

Mode:	LTE Bandwidth	LTE Channel and Frequency	RB Allocation		5GS6 SCS (kHz)	5GS6 Bandwidth	5GS6 Channel and Frequency	5GS6 RB Allocation		Port	Orientation	$ABM1_{LTE}$ dB(A/m)	$ABM2_{LTE}$ dB(A/m)	$ABM2_{5GS6}$ dB(A/m)	Ambient $Noise_{LTE}$ dB(A/m)	Ambient $Noise_{5GS6}$ dB(A/m)	Freq. Response (dB)	LTE			5GS6		
																		ABM SNR (dB)	T-Rating	Location	ABM SNR (dB)	T-Rating	Location
FR1 n25 π/2 BPSK EVS: 24.4 kbps	20 MHz	26365 1882.5 MHz	50	0	15	40 MHz	376500 1882.5 MHz	108	0	D	x (Axial)												
											y (Transversal)	4.85	-44.67	-49.76	-55.89	-50.41	1.81	49.52	T4	12.3, -8.3, 3.7	51.61	T4	12.3, -8.3, 3.7
FR1 n41 π/2 BPSK AMR-NB: 4.75 kbps	20 MHz	40620 2593 MHz	1	0	30	100 MHz	518598 2593 MHz	1	1	D	x (Axial)												
											y (Transversal)	3.39	-44.71	-49.79	-55.82	-50.41	1.58	**48.10**	T4	11.3, -7.5, 3.7	50.18	T4	11.3, -7.5, 3.7

Conclusion:

The calculated VoNR SNR is greater than VoLTE SNR; therefore, no further testing is required.

This report shall not be reproduced without the written approval of UL Verification Services Inc.

10.2. OTT Application

GSM/W-CDMA/CDMA OTT Test Results:

Mode:	Channel and Frequency	Bandwidth (Data Rate)	Antenna	Orientation	ABM1 dB(A/m)	ABM2 dB(A/m)	Ambient Noise dB(A/m)	Freq. Response (dB)	ABM SNR (dB)	T-Rating	Location	Plot Page #
GSM850 EDGE/EGPRS 2 Slot(s) ACC-ELD: 16 kbps	190 836.6 MHz	N/A	Port B	z (Axial)								1 - 2
				y (Transversal)	1.51	-48.97	-55.88	1.77	50.48	T4	13.3, -4.2, 3.7	
GSM1900 EDGE/EGPRS 2 Slot(s) ACC-ELD: 16 kbps	661 1880.0 MHz	N/A	Port C	z (Axial)								3 - 4
				y (Transversal)	2.18	-36.69	-55.88	1.85	**38.87**	T4	17.5, -13.8, 3.7	
*W-CDMA BII HSPA ACC-ELD: 16 kbps	9538 1907.6 MHz	N/A	Port D	z (Axial)								5 - 6
				y (Transversal)	3.78	-53.59	-55.88	2.00	57.37	T4	16.2, -10.2, 3.7	
W-CDMA BIV HSPA ACC-ELD: 16 kbps	1513 1752.6 MHz	N/A	Port D	z (Axial)								7 - 8
				y (Transversal)	3.37	-52.54	-55.88	2.00	55.91	T4	15, -10.1, 3.7	
W-CDMA BV HSPA ACC-ELD: 16 kbps	4233 846.6 MHz	N/A	Port B	z (Axial)								9 - 10
				y (Transversal)	2.36	-48.13	-55.88	2.00	50.49	T4	12.5, -9.3, 3.7	

Note(s):

1. The radial longitudinal (x axis) measurements are no longer required per ANSI C63.19
2. "*" Denotes single point measurements, as per §7.4.4.2 of ANSI C63.19-2011.

This report shall not be reproduced without the written approval of UL Verification Services Inc.

LTE OTT Test Results:

Mode:	Bandwidth (Data Rate)	Channel and Frequency	RB Allocation		Antenna	Orientation	ABM1 dB(A/m)	ABM2 dB(A/m)	Ambient Noise dB(A/m)	Freq. Response (dB)	ABM SNR (dB)	T-Rating	Location	Plot Page #
LTE Band 2 QPSK ACC-ELD: 16 kbps	20 MHz	18900 1880 MHz	100	0	Port D	z (Axial)								11 - 12
						y (Transversal)	1.03	-49.44	-55.85	1.85	50.47	T4	9.6, -7.5, 3.7	
LTE Band 4 QPSK ACC-ELD: 16 kbps	20 MHz	20175 1732.5 MHz	100	0	Port D	z (Axial)								13 - 14
						y (Transversal)	1.40	-48.94	-55.85	1.81	50.34	T4	10, -7.5, 3.7	
LTE Band 5 QPSK ACC-ELD: 16 kbps	10 MHz	20525 836.5 MHz	50	0	Port B	z (Axial)								15 - 16
						y (Transversal)	4.75	-52.37	-55.83	1.77	57.12	T4	16.3, -9.2, 3.7	
LTE Band 7 QPSK ACC-ELD: 16 kbps	20 MHz	21100 2535 MHz	100	0	Port D	z (Axial)								17 - 18
						y (Transversal)	-0.41	-50.15	-55.85	1.83	49.74	T4	8.8, -6.3, 3.7	
LTE Band 12 QPSK ACC-ELD: 16 kbps	10 MHz	23095 707.5 MHz	50	0	Port B	z (Axial)								19 - 20
						y (Transversal)	4.65	-52.38	-55.83	1.76	57.03	T4	15.8, -9.2, 3.7	
LTE Band 13 QPSK ACC-ELD: 16 kbps	10 MHz	23230 782 MHz	50	0	Port B	z (Axial)								21 - 22
						y (Transversal)	4.54	-45.58	-55.83	1.79	50.12	T4	16.3, -8.3, 3.7	
LTE Band 17 QPSK ACC-ELD: 16 kbps	10 MHz	23790 710 MHz	50	0	Port B	z (Axial)								23 - 24
						y (Transversal)	4.48	-52.54	-55.83	1.86	57.02	T4	15.4, -9.2, 3.7	
*LTE Band 25 QPSK ACC-ELD: 16 kbps	20 MHz	26365 1882.5 MHz	100	0	Port D	z (Axial)								25 - 26
						y (Transversal)	1.81	-47.73	-55.85	1.92	49.54	T4	10.3, -8.1, 3.7	
LTE Band 26 QPSK ACC-ELD: 16 kbps	15 MHz	26865 831.5 MHz	75	0	Port B	z (Axial)								27 - 28
						y (Transversal)	2.41	-50.03	-55.83	1.86	52.44	T4	12.5, -10.4, 3.7	
LTE Band 30 QPSK ACC-ELD: 16 kbps	10 MHz	27710 2310 MHz	50	0	Port D	z (Axial)								29 - 30
						y (Transversal)	3.50	-50.80	-55.83	1.73	54.30	T4	13.3, -8.3, 3.7	
LTE Band 38 64QAM ACC-ELD: 16 kbps	20 MHz	38150 2610 MHz	50	49	Port B	z (Axial)	10.79	-35.92	-55.85	1.87	46.71	T4	16.3, -12.9, 3.7	31 - 32
						y (Transversal)								
LTE Band 40 64QAM ACC-ELD: 16 kbps	20 MHz	39550 2390 MHz	50	49	Port B	z (Axial)	10.90	-38.01	-55.85	1.88	48.91	T4	12.5, -15.8, 3.7	33 - 34
						y (Transversal)								
*LTE Band 41 64QAM ACC-ELD: 16 kbps	20 MHz	41490 2680 MHz	50	49	Port B	z (Axial)	10.95	-35.22	-55.85	1.82	46.17	T4	16.5, -12.9, 3.7	35 - 36
						y (Transversal)								
LTE Band 42 64QAM ACC-ELD: 16 kbps	20 MHz	43490 3590 MHz	50	49	Port B	z (Axial)	10.57	-38.63	-55.85	1.79	49.20	T4	12.9, -14.6, 3.7	37 - 38
						y (Transversal)								
LTE Band 48 64QAM ACC-ELD: 16 kbps	20 MHz	56640 3690 MHz	50	49	Port B	z (Axial)	10.85	-37.39	-55.85	1.87	48.24	T4	12.5, -15.8, 3.7	39 - 40
						y (Transversal)								
LTE Band 66 QPSK ACC-ELD: 16 kbps	20 MHz	132322 1745 MHz	100	0	Port D	z (Axial)								41 - 42
						y (Transversal)	2.62	-48.48	-55.83	1.91	51.10	T4	12.1, -8.3, 3.7	

Note(s):

1. The radial longitudinal (x axis) measurements are no longer required per ANSI C63.19
2. "*" Denotes single point measurements, as per §7.4.4.2 of ANSI C63.19-2011.

This report shall not be reproduced without the written approval of UL Verification Services Inc.

Wi-Fi OTT Test Results:

Mode:	Channel and Frequency	Data Rate	Antenna	Orientation	ABM1 dB(A/m)	ABM2 dB(A/m)	Ambient Noise dB(A/m)	Freq. Response (dB)	ABM SNR (dB)	T-Rating	Location	Plot Page #
802.11n ACC-ELD: 31 kbps	*6 2437 MHz	MCS3 26 Mbps	ANT 4	z (Axial)								43 - 44
				y (Transversal)	4.61	-43.77	-50.55	1.98	48.38	T4	15.5, -8.5, 3.7	
802.11ax 20 MHz BW ACC-ELD: 31 kbps	*36 5180 MHz	MCS6 77 Mbps	ANT 6	z (Axial)								45 - 46
				y (Transversal)	2.60	-45.45	-50.55	1.89	**48.05**	T4	8.6, -8.1, 3.7	
	52 5260 MHz	MCS6 77 Mbps	ANT 6	z (Axial)								47 - 48
				y (Transversal)	3.09	-45.44	-50.55	1.96	48.53	T4	9.2, -8.3, 3.7	
	100 5500 MHz	MCS6 77 Mbps	ANT 6	z (Axial)								49 - 50
				y (Transversal)	4.44	-45.90	-50.55	1.83	50.34	T4	12.5, -9.2, 3.7	
	149 5745 MHz	MCS6 77 Mbps	ANT 6	z (Axial)								51 - 52
				y (Transversal)	4.31	-46.29	-50.55	1.89	50.60	T4	12.5, -9.6, 3.7	

Note(s):

1. The radial longitudinal (x axis) measurements are no longer required per ANSI C63.19
2. "*" Denotes single point measurements, as per §7.4.4.2 of ANSI C63.19-2011.

This report shall not be reproduced without the written approval of UL Verification Services Inc.

5G Sub 6 (5GS6) OTT Test Results – For PAG REUSE:

5G Sub 6 OTT call uses the same protocol, codec, and reference level as OTT LTE (i.e. -20 dBm0); therefore, testing was performed using the procedure listed in *KDB 285076 D03 HAC FAQ v01r05, A9*.

The DUT supports Stand-Alone FDD and TDD bands for NR transmission. For non-Stand-Alone 5G Sub 6 bands, an initial EN-DC connection is needed in order to transmit. Two Stand-Alone bands (one FDD and one TDD) were selected for 5G Sub 6 OTT testing.

To determine the 5G NR SNR rating, the following was performed:

1. Determine the OTT ABM1 value from an equivalent 4G LTE band, labeled $ABM1_{LTE}$.
2. Measure the ABM2 for the equivalent 5G Sub 6 band, labeled $ABM2_{5GS6}$.
3. Calculate the SNR for 5G Sub 6: $(ABM1_{\mathrm{LTE}}/ABM2_{5\mathrm{GS6}}) - 3dB$

All data recorded within this test report for 5G NR was done with a simulated connection, i.e., a forced transmission using the manufacture's test tool. The signal was taken from an equivalent LTE-FDD and LTE-TDD OTT band. The noise was measured with a simulated Stand-Alone 5G connection (due to test equipment limitations), and the 5G Sub 6 OTT SNR was calculated using these two instances. If the calculated 5G Sub 6 OTT SNR is greater than OTT LTE SNR, no further testing is deemed necessary. If 5G Sub 6 OTT is lower than OTT LTE by more than 3dB, further testing will be required.

Mode:	LTE Bandwidth	LTE Channel and Frequency	RB Allocation		5GS6 SCS (kHz)	5GS6 Bandwidth	5GS6 Channel and Frequency	5GS6 RB Allocation		Port	Orientation	$ABM1_{LTE}$ dB(A/m)	$ABM2_{LTE}$ dB(A/m)	$ABM2_{5GS6}$ dB(A/m)	Ambient $Noise_{LTE}$ dB(A/m)	Ambient $Noise_{5GS6}$ dB(A/m)	Freq. Response (dB)	LTE			5GS6		
																		ABM SNR (dB)	T-Rating	Location	ABM SNR (dB)	T-Rating	Location
FR1 n25 π/2 BPSK ACC-ELD: 16 kbps	20 MHz	26365 1882.5 MHz	100	0	15	40 MHz	376500 1882.5 MHz	216	0	D	x (Axial)												
											y (Transversal)	1.81	-47.73	-49.81	-55.85	-50.41	1.92	49.54	T4	10.3, -8.1, 3.7	48.62	T4	10.3, -8.1, 3.7
FR1 n41 π/2 BPSK ACC-ELD: 16 kbps	20 MHz	41490 2680 MHz	50	49	30	100 MHz	518601 2593 MHz	135	135	B	z (Axial)	10.95	-35.22	-47.59	-55.85	-49.96	1.82	**46.17**	T4	16.5, -12.9, 3.7	55.54	T4	16.5, -12.9, 3.7
											y (Transversal)												

Conclusion:

The calculated 5G Sub 6 OTT SNR is greater than LTE OTT SNR; therefore, no further testing is required.
The calculated 5G Sub 6 OTT TDD SNR is no greater than a 3dB difference to LTE OTT TDD SNR; therefore, no further testing is required.

This report shall not be reproduced without the written approval of UL Verification Services Inc.

10.3. Worst Case T-Coil Test Plot

Test Laboratory: UL Verification Services Inc. SAR Lab 11 Date/Time: 5/26/2023 7:35:31 AM

GSM 1900

Communication System: UID 0, 1@GPRS-FDD (TDMA, 8PSK, 2 slot) (0); Frequency: 1880 MHz; Duty Cycle: 1:4.00037
Phantom section: TCoil Section
DASY5 Configuration:
- Probe: AM1DV3 - 3083; ; Calibrated: 1/18/2023
- Sensor-Surface: 0mm (Fix Surface)
- Electronics: DAE4 Sn1352; Calibrated: 11/18/2022
- Phantom: HAC Test Arch with AMCC; Type: SD HAC P01 BB
- Measurement SW: DASY52, Version 52.10 (4);SEMCAD X Version 14.6.14 (7483)

T-Coil scan (scan for ANSI C63.19 2011 compliance)/GSM 1900_8PSK 2 Slots_Ch. 661_Port C/y (transversal) 4.2mm 50 x 50/ABM Interpolated SNR(x,y,z) (121x121x1):

Interpolated grid: dx=1.000 mm, dy=1.000 mm
Signal Type: Audio File (.wav) 48k_voice_1kHz_1s.wav
Output Gain: 37.09
Measure Window Start: 300ms
Measure Window Length: 1000ms
BWC applied: 0.16 dB
Device Reference Point: 0, 0, -6.3 mm

Cursor:
ABM1/ABM2 = 38.87 dB
ABM1 comp = 2.18 dBA/m
BWC Factor = 0.16 dB
Location: 16.7, -9.2, 3.7 mm

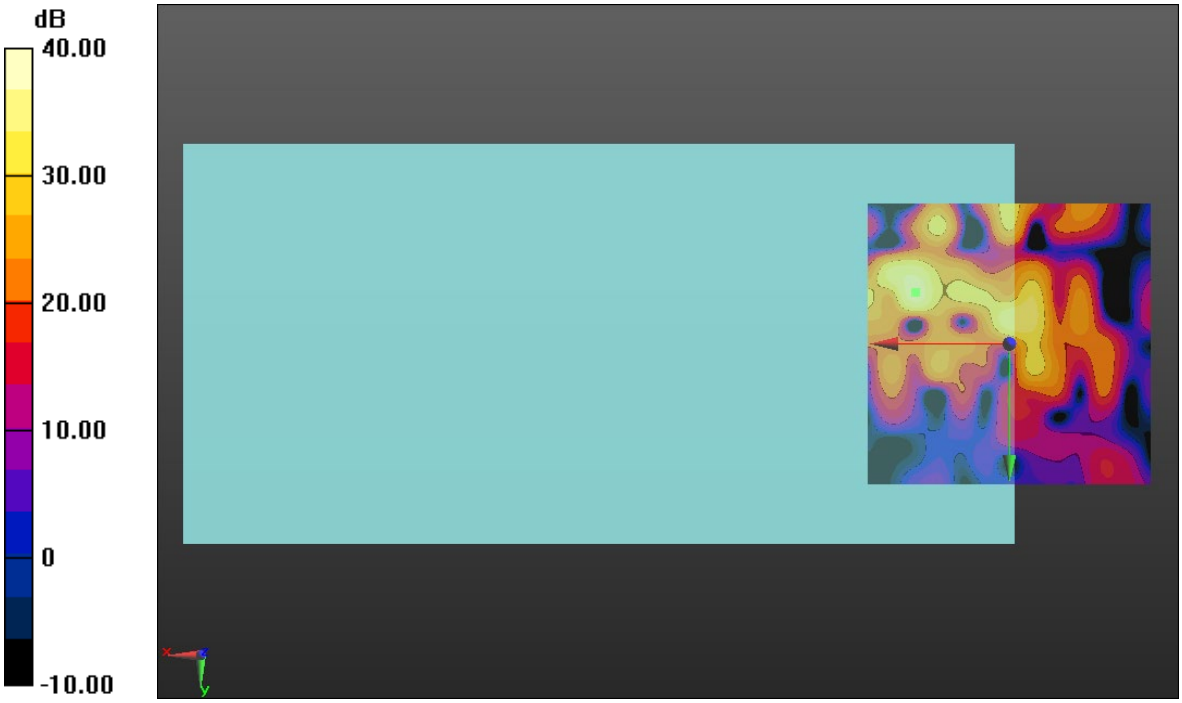

0 dB = 1.000 = 0.00 dB

This report shall not be reproduced without the written approval of UL Verification Services Inc.

Appendix

Refer to separated files for the following appendixes

Appendix A: T-Coil Setup Photo

Appendix B: T-Coil Test Plots (CMRS)

Appendix C: T-Coil Test Plots (OTT)

Appendix D: T-Coil Probe Certificates

Appendix E: Adjusted Gain Procedure

END OF REPORT

This report shall not be reproduced without the written approval of UL Verification Services Inc.