EAC-2000 MANUAL ADDENDUM FOR DIGITAL OPERATION

D R A F T

15 July, 1999

1.1 Introduction

This section of the manual describes EAC-2000 operation when it has TIA-136 digital-channel sets installed. An EAC-2000 may be ordered directly from the factory with digital channel sets installed, or upgrade kits may be ordered to add digital channel-set capability to an existing EAC-2000 installation.

In general the installation issues (isolation needs, channel selection, etc.) are identical for either type of system and are covered in detail in the AMPS EAC-2000 manual. The differences between a TIA-136 equipped system and a standard AMPS-only system will be covered in this section.

The hardware differences for a digital-equipped EAC-2000 are:

1.1.1 Controller Module

Controller Module 19-20001-1 is required for TIA-136 digital operation. If an existing EAC-2000 installation has the older (analog only) 19-5598-1 Controller Module installed, it must be replaced with the dual-mode 19-20001-1 Controller Module. The 19-20001-1 module will process both analog and digital calls.

1.1.2 RF Module

The 19-20000-1 IS-136 RF Module is required for TIA-136 operation. It may be placed in any card cage slot in place of the analog 19-5599-1 Cellular I.F. module within the following constraints:

- A 19-20000-1 module must be placed in slot 5 for DCCH operation.
- A 19-20000-1 module must be placed in slot 6 if dual-mode hand-in operation is desired. If DCCH-only operation is implemented or if hand-in of DTC calls is not required, then the analog 19-5599-1 Cellular I.F. module may be left in slot 6.
- If dual-mode (analog control channel as well as a DCCH channel) operation is desired, then an analog 19-5599-1 module must be installed in slot 1 for the analog control channel.

- Any combination of 19-2000-1 IS-136 RF modules and 19-5599-1 Cellular I.F. modules may be placed in the remaining slots in the card cage.

1.1.3 45W PA Module

The 1819.G1 class AB linear PA must be used with the 19-20000-1 module. The class C PAs (21-117-1, 21-396-1, etc.) are usable only with the analog 19-5599-1 Cellular I.F. modules. Note also that the 1819.G1 linear PA cannot be used in place of a class C PA. No power output will be provided in either case if the PA is mismatched with its corresponding RF module.

Note that the 1819.G1 PA, the 19-20000-1 and the 19-20001-1 modules have reverse-colored labels (white on blue instead of blue on white) to provide a quick visual aid in identifying the modules required for TIA-136 operation. The 1819.G1 PA also has a label on its handle stating that it is an “IS-136 Linear PA”. It is also white-on-blue to match the corresponding controller and RF module labels.

1.2 Kit Contents

To allow field conversion of EAC-2000 installations to digital operation, two kits are available:

If the EAC-2000 has a 19-5598-1 Controller module installed, then a EK2000DCCH kit must be ordered. The EK2000ACCH kit consists of:

- One 19-20001-1 Controller Module
- One 19-20000-1 IS-136 RF Module
- One 1819.G1 IS-136 Linear PA

If the EAC-2000 has a 19-20001-1 Controller module installed, then an EK2000DTC kit must be ordered. EK2000DTC kit consists of:

- One 19-20000-1 IS-136 RF Module
- One 1819.G1 IS-136 Linear PA

The EK2000DTC kit may be used for the DCCH channel if the EAC-2000 already has the 19-20001-1 Controller Module installed. Otherwise, any number of EK2000DTC kits may be ordered to add or increase DTC capacity in the EAC-2000.

Any shortage or apparent damage should be resolved before beginning the installation.

1.3 Saving the existing System Configuration

If the Controller in an existing EAC-2000 installation is being upgraded to the 19-20001-1 version, then many of the parameters programmed into the existing system will also need to be copied to the new controller. To assist in this operation a blank Parameter Worksheet is included in the appendix. This provides a place to list the current setup parameters so that they can be entered as the new digital-capable Controller is installed. **The highlighted entries on the Parameter Worksheet are digital-specific and will entered later.**

Information on connecting a local terminal to the EAC-2000D is contained in Section 4.4 of Volume 1 of the EAC-2000 Manual.

1.4 Determining the Digital-specific Parameters

1.4.1 Identifying the Digital Donor Control Channel

The digital donor control channel is the IS-136 control channel of the primary cell site with which the EAC-2000 will communicate. It can be used in conjunction with an Analog Donor Control channel where both analog only and IS-136 mobiles are to be served in the boosted coverage area.

• **When the booster is adjacent to a single cell site**, the control channel(s) of that cell site is(are) the donor control channel(s).

• **When the booster is adjacent to several cell sites**, the control channel(s) of the cell site with the most unused channels should be chosen. (This cell is then referred to as the primary donor cell.) More than one cell site being received by a donor antenna can result in unwanted hand-offs by the cellular system, causing dropped calls. Therefore the donor antenna should be positioned to favor the desired donor cell site. As in the analog case, the reverse-path signal level received from the EAC-2000 by the adjacent cell sites **must be** less than the signal level received by the selected donor site. Usually a 10 dB margin is sufficient.

• **When both analog and digital donor channels are selected**, it is best if they are both from the same donor cell site as that makes positioning of the donor antenna easier.

1.4.2 Selecting a Boosted Digital Control Channel

The boosted digital control channel (selection **X**) is the control channel that will be used in the EAC-2000 coverage area. Select a channel that meets the following requirements:

- At least a 3 channel separation from any donor channel (both control and voice)
- At least a 21 channel separation from any boosted channel (both control and voice). (Closer spacing is possible with higher losses, consult the factory)
- Conforms to the local system configuration. (Since IS-136 mobiles are assisted in finding a DCCH, the system must be configured to add the boosted Digital Control Channel to those information broadcasts). There are several strategies in the cellular system setup that can assist mobile DCCH selection. These are described in the appendix *System Integration Issues and Strategies*.

1.4.3 Recording the digital parameters on the Parameter Worksheet

To make it easier to program the digital parameters into the system, they may be entered onto the parameter worksheet. The digital parameters are highlighted so they can be easily found.

2.0 Installing the new Hardware

This section of the manual details the installation of the hardware contained in the DCCH kit. By convention the DCCH hardware is installed in slot 5, so any AMPS hardware (PA and RF Module) currently installed in slot 5 must be removed or relocated to another unused slot. The analog 19-5598-1 Controller will be removed so it can be replaced with the 19-20001-1 IS-136 controller included in the DCCH kit.

This upgrade will require the system be removed from service for a period of time and should be scheduled to reduce impact on service.

2.1 Removing the AMPS hardware

Be sure that all current set-up information from the system has been recorded as described in section 1.3 of this manual.

Slot 5 is the fifth position from the left in the RF/IF module card cage. The corresponding PA position is the upper right slot in the lower (for a 10-channel

EAC-2000) PA cage. For a 5-channel EAC-2000, it is in the upper right slot of the PA cage.

When no traffic is currently being handled by the booster shut off the booster.

Remove the Controller, RF module and PA that are currently in slot 5.

2.2 Installing the DCCH hardware

Install the 1819.G1 IS-136 PA into PA Slot 5

Install the 19-20000-1 IS-136 RF Module into IF slot 5

Install the IS-136 Controller into the controller slot

Connect the jumper cable from the IS-136 Controller to the IS-136 RF module as shown in the detail Figure 1.

Verify all modules are fully seated, the retaining screws on the Controller and RF Module are finger-tight, and the front-panel data cable is correctly installed between the 19-20001-1 Controller and the 19-20000-1 IS-136 RF Module in slot 5.

If DTC kits are being installed, place the 19-20000-1 I.F. modules in the desired slots. For DTC hand-in, a 19-20000-1 module must be placed in card cage slot 6. 19-20000-1 modules may be placed in any other available slot for DTC operation. If analog control channel operation is to be provided, then an analog 19-5599-1 Cellular I.F. module must be left in card cage slot 1. If necessary, existing 19-5599-1 analog modules may be removed to make room for the new 19-20000-1 digital modules.

Note: The IS-136 PA(s) will be installed as part of the following procedure.

2.3 Preparing the AMPS hardware

Since the Controller contains all of the channel assignment information, when the system is initially powered up with the 19-20001-1 Controller the system will attempt to run with the factory defaults, causing a mismatch with the combiner tuning. Therefore it is recommended that all the analog PA's be pulled so that they remain in their slot but do not make contact with the backplane connector. This will effectively take them out of the system until the channels are correctly programmed.

2.4 Connecting a Local Terminal

The IS-136 Controller uses the same RS-232 parameters and same style cable as the original controller. Connect the terminal as follows.

1. Using the data cable that was provided with the EAC-2000, connect the terminal to the 25-pin D-sub connector located on the front of the controller module.

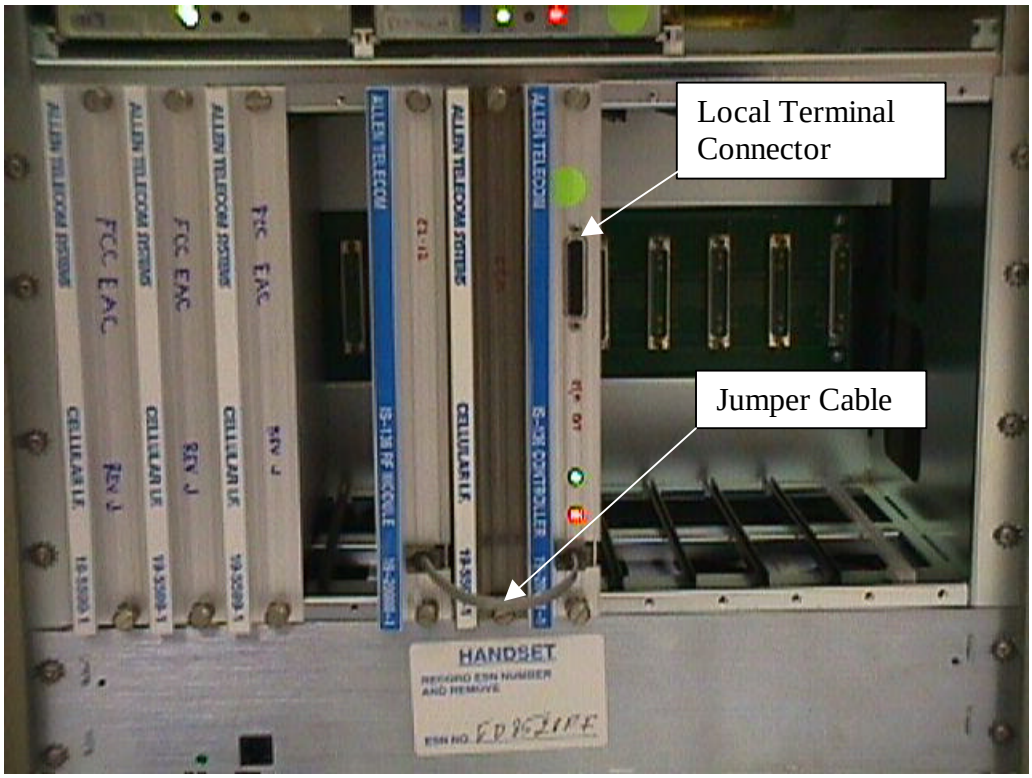

Figure 1
Detail showing Local Terminal Connector and Installed Jumper Cable

2. Power up the terminal and set it to the following parameters:
   - 9600 baud
   - Even parity
   - 7 data bits, 1 stop bit
   - Full duplex (no local echo)

   If possible, also set the terminal to—
   - All capitals
   - Send carriage return only (no line feed)
   - Disable AUTO XON/XOFF and soft scroll

   If you are using a terminal emulation program, select TTY or VT100. Be

aware that some terminal emulation programs generate extraneous characters that may interfere with communicating with the EAC-2000.

3. Power up the EAC-2000. *(After about 2 seconds, the terminal should respond CONSOLE LOCKED.*)

4. Enter **<CR>** (carriage return or enter, depending on the keyboard). *(The terminal should respond with a welcome message and prompt you for a password.)*

   - If something comes up but is illegible, check the terminal setup.

   - If nothing comes up, power down. Recheck the power hookup, the terminal hookup, and the terminal setup.

5. Enter the password, followed by **<CR>**. The default password is 1234. *(The terminal should respond with more salutation and the > prompt.)* The system is ready for you to set parameters.

2.5 Configuring the System

Configuring the system consists of re-entering previous analog channel and setup information as well as the new digital setup parameters into the IS-136 Controller. To make this operation easier, the setup screens exactly parallel those used in the AMPS EAC-2000, with additions to cover digital operation as needed. Since for many systems the default values are acceptable, reprogramming of those values will not be needed. The defaults for both the AMPS and digital-equipped EAC-2000 are shown on the Parameter Worksheet.

2.6 Changes to the SET Menus for DCCH and DTC Operation

The following changes have been made to the SET menus to accommodate DCCH and DTC operation:

1) In the RF Boards / Position X menu, STATUS parameter, the following choices are now available (for all boards except board 6):

```
(0) DISABLED
(1) ENABLED AMPS Control
(2) ENABLED AMPS Voice
(3) ENABLED TDMA DCCH
(4) ENABLED TDMA DTC
```

For board 6, the choices are:

```
(0) DISABLED
(1) ENABLED Scan
```

Note that only one position Status may be set to ENABLED AMPS Control. Also, only one position Status may be set to ENABLED TDMA DCCH

2) The Boosted Channel (whether it is voice, analog control or DCCH) is now set in the RF Boards / Position X menu. For example, if you have the "Status" of a board set to ENABLED TDMA DCCH, the position menu for that board will display as follows:

```
Position 5

A  Status ...............................ENABLED TDMA DCCH
B  Boosted DCCH Channel ................. 169
C  Diversity ............................ON
```

3) On the PA Menu, Selection K, "Key Forward PA" has been changed as follows. If you select a PA number for which the associated Board STATUS is ENABLED TDMA DCCH or ENABLED TDMA DTC, then you will be prompted to enter the desired PA output power. The allowable range is 33 to 48 dBm in one dB increments. In the case of the digital PA, there is no power adjustment screw. Rather, the power out is controlled by software to be in a range of the PA power set point - 0 to +0.5 dB.

Once you have entered the desired power out, the PA will be keyed, and the PA power out reading will be displayed as usual. During this display, the PA power out setting may be adjusted up or down by entering "U" or "D". This allows the power out to be adjusted to compensate for the varying losses in the combiner and the duplexer such that the desired power out at the antenna connector can be achieved.

Following is the display that occurs when a TDMA PA is keyed.

```
Enter your selection ...k

 NOTE: Keying PA may cause calls to drop
       and will disrupt service in the EAC coverage area.

 Enter RETURN to exit or number of PA to key : 5

 PA 5 is DTC or DCCH; PA Output is software controlled to a
 target range of PA Power Setting +/- .3 dB ...

 Current PA Power Setting is : +46.5 dBm

 Enter new value (or RETURN if no change) ...

 While keyed, Enter "U" or "D" to adjust the PA Power Setting ...

 Current PA Power Setting is : +46.5 dBm
 PA Position 5     Channel Number  169     PA Power +46.6 dBm
```

4) On the PA Menu, if any board has Status set to Enabled TDMA DCCH or Enabled TDMA Voice, additional power settings appear. Following is the full PA Menu.

```
Power Amplifiers

A  Forward PA Power Step - Voice ..................0
B  Forward PA Power Step - Control ................0
C  Forward PA Power Step - Hand-off................0
D  Forward PA Power Low Alarm Point - Voice........+40.0 dBm
E  Forward PA Power Low Alarm Point - Control......+40.0 dBm
F  Forward PA Power Low Alarm Point - Hand-off.....+40.0 dBm
G  Reverse PA Power Set - Voice ...................+20 dBm
H  Reverse PA Power Set - Control .................+20 dBm
I  Reverse PA Power Low Alarm Point - Voice........+15 dBm
J  Reverse PA Power Low Alarm Point - Control......+15 dBm
K  Key Forward PA ................................POWER ADJ / COMBINER TUNING
L  Key Reverse PA ................................POWER MEASUREMENT
M  Forward PA Power Low Alarm Point - DCCH ........+40.0 dBm
N  Reverse PA Power Set - DCCH ....................+20 dBm
O  Forward PA Power Low Alarm Point - DTC .........+40.0 dBm
P  Reverse PA Power Set - DTC .....................+20 dBm

X  Done with this menu
```

Note that selections M through P are new. They allow setting of the Forward PA Power Low Alarm Point and Reverse PA Power Set for DCCH and DTC boards and PAs. These settings correspond in functionality to their counterparts for the analog voice and control channels.

Note that there is no "Reverse PA Power Low Alarm Point" setting for the DTC or DCCH reverse PAs. The TDMA boards perform closed loop power control and reverse PA power out checking. There is still an alarm generated if the Reverse PA power output is low, however, the threshold at which the alarm occurs is not operator settable.

5) The Control Channels menu (under the System Parameters menu) has been changed to accommodate extra settings for DCCH. The following additional menu items will appear if a board Status is set to Enabled TDMA DCCH.

```
I  Donor DCCH Channel ................................ 400

J  DCCH Channel State During "All Channels Busy" ...... DIRECTED RETRY
```

The Donor DCCH Channel setting has obvious functionality.

The DCCH Channel State During "All Channels Busy" paramater has function that controls the Boosted DCCH operation when all channels are busy (or, if there is no Donor DCCH being received).

The available choices are as follows.

```
(1) Off
```

```
(2) DENY ACCESS, BUT COUNT
(3) BOOST ACCESSES
(4) DIRECTED RETRY
```

These selections are identical to the selections for the analog "Control Channel State when All Channels Busy" parameter.

6) The Control Channels Menu no longer has a "Boosted Control Channel" selection. This channel is now entered in the RF Board menu.

7) The Voice Channels Menu no longer has a "Boosted Voice Channels" selection. These channels are now entered in the RF Board menu.

8) The RSSI Alarm Points menu under the Alarms menu has two new settings to accommodate the DCCH. The new RSSI Alarm Points menu is as follows:

```
RSSI Alarm Points

A  Donor Control Channel RSSI - High Alarm Point ........DISABLED

B  Donor Control Channel RSSI - Low Alarm Point .........-80 dBm

C  Donor Voice Channel RSSI - High Alarm Point ..........DISABLED

D  Donor DCCH Channel RSSI - High Alarm Point ...........DISABLED

E  Donor DCCH Channel RSSI - Low Alarm Point ............-80 dBm
```

Note that selections D and E are new. They allow the setting of the RSSI levels that cause alarms for the Donor DCCH.

9) The PA power settings for the forward PA for DCCH and DTC have a resolution of 0.1 dBm. Also, the settings for the analog PA's have been changed to have a resolution of 0.1 dBm. The associated powers reported with the "SSS" command and the "PWR" command will read with resolution of 0.1 dBm.

Note that the accuracy of this reading ultimately depends upon the calibration of the sensor in the PA or or the M1 antenna power sensor. Typically, this accuracy is +/- .75 dB.

The reason power out is reported with a resolution of 0.1 dB even though the accuracy is no better than 0.75 dB is to allow small changes in output power to be resolved and displayed. For example, if a reported power out changes from +46.7 dBm to +46.2 dBm in a short term, the appropriate conclusion to draw is that (1) the power out initially was 46.7 +/- 0.75 dBm and (2) the power out dropped by about 0.5 dB.

3.0 Tuning the Transmitter Combiner and Setting Output Power

The combiner must be tuned and the output power levels set whenever the boosted channels are entered or changed. For the upgrade to DCCH at least the boosted DCCH will be new and will require adjustment. Any other channel changes will also require retuning.

Even if the DCCH is only new channel to be tuned, it is preferable to repeak the combiner and verify the output power for the other channels.

3.1 Tuning the DCCH Combiner PA 5

1. With the system power **OFF**, connect power-measuring equipment to the M1 antenna port (see Figure XX). **Be sure that PA 5 (the IS-136 PA) is fully seated)**. Remove the cover plates from the forward combiner(s) to reveal the combiner tuning screws. Then turn the power back on. Output power may be monitored using a through-line wattmeter (or a wattmeter with a built-in load) to monitor output power.

2. From the SET Main Menu, type **B <CR>** to display the Power Amplifiers Menu.

```
A  Forward PA Power Step - Voice ..................0
B  Forward PA Power Step - Control ................0
C  Forward PA Power Step - Hand-off................0
D  Forward PA Power Low Alarm Point - Voice........+40.0 dBm
E  Forward PA Power Low Alarm Point - Control......+40.0 dBm
F  Forward PA Power Low Alarm Point - Hand-off.....+40.0 dBm
G  Reverse PA Power Set - Voice ...................+20 dBm
H  Reverse PA Power Set - Control .................+20 dBm
I  Reverse PA Power Low Alarm Point - Voice........+15 dBm
J  Reverse PA Power Low Alarm Point - Control......+15 dBm
K  Key Forward PA ................................POWER ADJ / COMBINER TUNING
L  Key Reverse PA ................................POWER MEASUREMENT
M  Forward PA Power Low Alarm Point - DCCH ........+40.0 dBm
N  Reverse PA Power Set - DCCH ....................+20 dBm
O  Forward PA Power Low Alarm Point - DTC .........+40.0 dBm
P  Reverse PA Power Set - DTC .....................+20 dBm

X  Done with this menu
```

3. Type **K <CR>** to key a forward PA.

4. Type **5 <CR>** to key PA 5 and display the forward power output as measured at the sensor.

5. Refer to the illustration affixed to the inside of the front door of the EAC-2000 cabinet to determine which combiner cavities coordinate with which PAs. Loosen the lock nut and adjust combiner cavity 5 using a screwdriver.

   - If using a wattmeter, adjust for **maximum power output** as indicated by the wattmeter.

   - Retighten the lock nut.

     NOTE: The power reading displayed on the terminal will not vary as the combiner is tuned.

Combiner Cavity

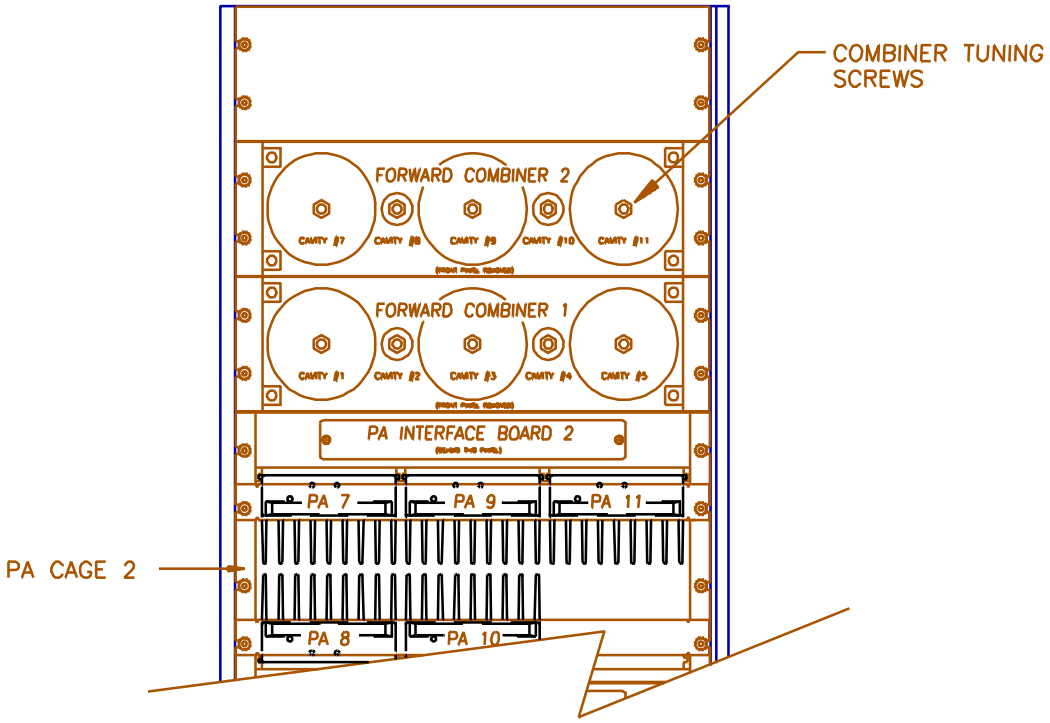

6. Adjust the power output for PA 5 from the laptop computer as described in paragraph 3) in section 2.6.

   ☞ **NOTE:** The PA power level displayed on the terminal is 3 to 4 dB higher than the power level at the antenna port because of internal cable and combiner losses. The displayed PA power ranges from +38 to +47 dBm (7–45 watts), which corresponds to a range at the M1 antenna connector of +34 to +43 dBm (3–20 watts). If the displayed power level is used instead of a wattmeter, take these differences into consideration.

Always use a wattmeter if an accurate power level reading at the M1 antenna connector is desired.

3.2 Adjusting Combiners and Power levels for PAs 1-4, and 7-11

In a like manner the combiner can be tuned for the remaining analog channels by selecting a new PA each time. **Each PA should be fully seated in its slot before proceeding**. The power level is set differently on the analog PA's as follows:

1. Adjust the power output for each PA using a small screwdriver or adjustment tool to turn the PA power potentiometer on the front of the PA (Figure 4-9). Use a wattmeter, if available, to measure the power output. Adjust to the level necessary to meet the authorized ERP level from the antenna.

☞ **NOTE:** The PA power level displayed on the terminal is 3 to 4 dB higher than the power level at the antenna port because of internal cable and combiner losses. The displayed PA power ranges from +38 to +47 dBm (7–45 watts), which corresponds to a range at the M1 antenna connector of +34 to +43 dBm (3–20 watts). If the displayed power level is used instead of a wattmeter, take these differences into consideration. Always use a wattmeter if an accurate power level reading at the M1 antenna connector is desired.

Location of Analog PA Power Potentiometer

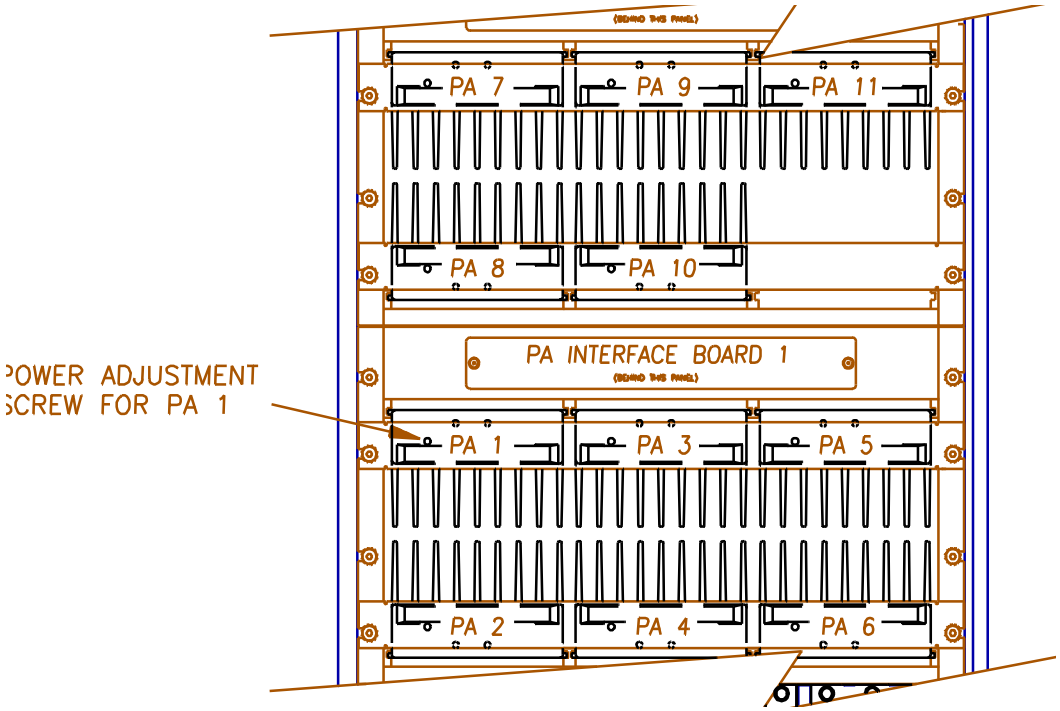

2. Note that the PA power potentiometer has a 7–10 dB turn down range. If the power out cannot be adjusted low enough, hit **ESC** to return to the Power Amplifiers Menu.

   Select **B**, Forward PA Power Step - Control. This allows entry of a setting between 0 and 3. Increasing the step by 1 causes the maximum power out to be reduced by 4 dB (2→8 dB, 3→12 dB). Adjust this parameter in conjunction with the potentiometer to achieve the desired output power.

3. Repeat steps 3 (selecting a new PA each time) through 7 to adjust the remaining analog PAs (if installed).

   If low power out is desired, use selection **A**, Forward PA Power Step - Voice, for PAs 2–5 and 7–11.

4. When all PAs have been adjusted, make a second pass through the PAs to check tuning and power levels, and make further adjustments as needed. This step is needed because one of the cavities might have been close to the point to which a second cavity was being tuned. This would cause erroneous power readings and adjustment during the initial pass.

3.3 Adjusting the PA 6 Power Level

PA 6 output power does not pass through the combiner. (For a description of PA 6 function, see Section 2 of Volume 3, Technical Information.) To adjust its power level—

1. Turn the power off, move the power measuring equipment to the M2 antenna port, and turn the power back on.

   If low power out of PA 6 is desired, use selection **C**, Forward PA Power Step - Hand-off, to reduce the maximum power out.

NOTE: If a digital module is installed in slot 6, then use the procedure described in paragraph 3) in section 2.6 for setting the power output level.

EAC-2000 Operating Parameters Work Sheet

Serial Number _____ (from “SSS” command)

RF Boards

	1	2	3	4	5	6	7	8	9	10	11
Status	_____	_____	_____	_____	_____	_____	_____	_____	_____	_____	_____
Diversity	_____	_____	_____	_____	_____	_____	_____	_____	_____	_____	_____

Power Amplifiers

Forward PA Power Step - Voice _____
Forward PA Power Step - Control _____
Forward PA Power Step - Hand-off _____
Forward PA Power Low Alarm Point - Voice _____
Forward PA Power Low Alarm Point - Control _____
Forward PA Power Low Alarm Point - Hand-off _____
Reverse PA Power Set - Voice _____
Reverse PA Power Set - Control _____
Reverse PA Power Low Alarm Point - Voice _____
Reverse PA Power Low Alarm Point - Control _____

Site Id

Site Identification _____
Multi-Hop Feature _____

Control Channels

Donor Control Channel _____
Boosted Control Channel _____
RF Board Pair to Use for Control _____
Control Channel State _____
Directed Retry Channels 1_____ 2_____ 3_____ 4_____ 5_____ 6_____
Backup Control Channel Option _____
Revertive Control Channel Option _____

- Substitute Control Channel _____
- Booster Link Channel _____

- These selections only appear if Backup Control Channel is enabled or if Multi-Hop mode 3 or 4 is selected.

Voice Channels

Boosted Voice Channel 2 ____ 3 ____ 4 ____ 5 ____ 7 ____ 8 ____ 9 ____ 10 ____ 11 ____

Donor Voice Channels

5970 Hz SAT				6000 Hz SAT				6030 Hz SAT
____	____	____	____	____	____	____	____	____
____	____	____	____	____	____	____	____	____
____	____	____	____	____	____	____	____	____
____	____	____	____	____	____	____	____	____
____	____	____	____	____	____	____	____	____
____	____	____	____	____	____	____	____	____
____	____	____	____	____	____	____	____	____
____	____	____	____	____	____	____	____	____
____	____	____	____	____	____	____	____	____

Modem Control

Master Password _____
Restricted Password _____
Console Timeout _____
Auto Dial Enable _____
Dial-up Phone Number 1 _____

```
Dial-up Phone Number 2 ____________________________
Auto Dial Trials Max _____
Max Auto Dial Trial Period _____
Delay Between Auto Dial Trials _____
Modem Mobile MIN _________________
Modem Mobile Power step _____
```

Modem Setup

NOTE: Record these strings before the upgrade, but do NOT reenter them after version 2X.03 or later is installed. Versions 2X.03 and later have new default strings that allow the remote link to run at high baud rates and to use error correction.

Init String _____
Dial Command _____
Hangup String _____
Local Port Baud Rate _____
Local Port Comm Params _____
Remote Port Baud Rate _____
Remote Port Comm Params _____

Thresholds and Power Control Menu

Mobile Dynamic Power Control Threshold _____
Hand-in Threshold _____
Multi-Donor Activation Threshold _____
Hand-back Threshold _____
Hand-in Mobile Power Step _____
Hand-back Mobile Power Step _____
RSSI Averaging Speed _____
Delay Between Hand-in Attempts _____
Station Power Class Selective Boosting _____

Call Disconnect Parameters

Donor RSSI _____
Sat Fade Timeout _____
Max Number of Hand-back Attempts _____
Minimum Delay Between Hand-back Attempts _____

Call Processing Parameters Menu

Mobile RSSI > Threshold Parameters _____
Hand-back Grab-back Control _____

Alarms Menu

Antenna Return Loss - Low Alarm Point _____

PA to Antenna Return Loss - High Alarm Point _____
PA Temp - High Alarm Point _____
PA Temp - Fan Activation Point _____
PA Temp - PA Power Cutback Point _____
Power Control Causes PA Power Cutback _____
+28 Volt Supply - PA Power Cutback Point _____
+28 Volt Supply - Low Alarm Point _____
+12 Volt Supply - Low Alarm Point _____
+6 Volt Supply - Low Alarm Point _____

External Analog Inputs Menu

PA 1-6 Cage:
Ext. Analog Input 1 Alarm State _____
Ext. Analog Input 2 Alarm State _____
Ext. Analog Input 3 Alarm State _____
Ext. Analog Input 4 Alarm State _____

PA 7-11 Cage:
Ext. Analog Input 1 Alarm State _____
Ext. Analog Input 2 Alarm State _____
Ext. Analog Input 3 Alarm State _____
Ext. Analog Input 4 Alarm State _____

External Digital Inputs Menu

PA 1-6 Cage:
Ext. Digital Input 1 Alarm State _____
Ext. Digital Input 2 Alarm State _____
Ext. Digital Input 3 Alarm State _____
Ext. Digital Input 4 Alarm State _____

PA 7-11 Cage:
Ext. Digital Input 1 Alarm State _____
Ext. Digital Input 2 Alarm State _____
Ext. Digital Input 3 Alarm State _____
Ext. Digital Input 4 Alarm State _____

External Digital Outputs Menu

PA 1-6 Cage:
Ext. Digital Output 1 State _____
Ext. Digital Output 2 State _____
Ext. Digital Output 3 State _____
Ext. Digital Output 4 State _____

PA 7-11 Cage:
Ext. Digital Output 1 State _____
Ext. Digital Output 2 State _____
Ext. Digital Output 3 State _____
Ext. Digital Output 4 State _____

Critical Alarms
(**NOTE:** default values for these are shown)

Board Out-of-Service Alarm..... CRITICAL _____
Board ROM Alarm..... CRITICAL _____
Board Calibration Memory Alarm ..... CRITICAL _____
Serial Data Link Alarm ..... CRITICAL _____
Personality Mismatch Alarm..... CRITICAL _____
Synthesizer Unlocked Alarm ..... CRITICAL _____
RVS PA PWR Low Alarm ..... CRITICAL _____
RSSI Alarm ..... LOG ONLY _____
PA Out-of-Service Alarm ..... CRITICAL _____
PA TEMP - High Alarm ..... CRITICAL _____

PA Power - Low Alarm ..... CRITICAL _____
PA to Antenna Loss High Alarm ..... CRITICAL _____
Antenna RET Loss Alarm ..... CRITICAL _____
ROM Alarm ..... CRITICAL _____
RAM Alarm ..... CRITICAL _____
NOVRAM Alarm ..... CRITICAL _____
SAT Detector Alarm ..... CRITICAL _____
Power Supply Voltages - Low Alarm..... CRITICAL _____
External Analog Input Alarm..... LOG ONLY _____
External Digital Input Alarm ..... LOG ONLY _____

RSSI Alarm Points

Donor Control Channel RSSI - High Alarm Point	NONE _____
Donor Control Channel RSSI - Low Alarm Point	-80 dBm _____
Forward Voice Channel RSSI - High Alarm Point	NONE _____

AMPS

EAC-2000™ Manual

Installation • Operation • Technical

Order No. 27-7654-3

Issue 12/95

© Copyright 1995 Allen Telecom Systems
All Rights Reserved

ALLEN TELECOM GROUP
SYSTEMS
DIVISION™

Field Support

If you need technical assistance with the EAC-2000™, contact Allen Telecom Systems at one of the following telephone numbers:

Extend-A-Cell HOTLINE:		(800) 800-EAC4 (3224)
	or	(216) 349-8413
Systems Engineering Department:		(216) 349-8413

The AMPS EAC-2000™ Manual (Order No. 27-7654-3, 12/95) includes the following:

- 27-7655-2 Volume 1, Installation Procedures
- 27-7656-2 Volume 2, Operating Procedures
- 27-7657-2 Volume 3, Technical Information
- 27-7658-3 Appendices
- 27-7659-2 Glossary and Index
- 27-7660-1 Parts and Accessories Ordering Information

LIMITED WARRANTY

ALLEN TELECOM SYSTEMS, a Division of the ALLEN TELECOM GROUP, INC. ("ALLEN TELECOM") warrants, on the terms and conditions hereto set forth, all products manufactured by it to be free under normal use and service from defects in materials and workmanship for a period of one (1) year from the date of shipment, to the first consumer (the "Warranty Period").

ALLEN TELECOM's obligation under this Limited Warranty is limited to prompt repair or replacement of the product, at its option, without charge, at an authorized ALLEN TELECOM dealer or at the factory of ALLEN TELECOM in Cleveland, Ohio, when the product is returned to an authorized dealer or to the factory with all transportation charges prepaid and examination of the product shall disclose it to have been defective in the respects aforesaid during the Warranty Period.

The Limited Warranty shall not be extended beyond its original term with respect to any part or parts repaired or replaced by ALLEN TELECOM hereunder.

The Warranty Period shall not apply to any product which has been repaired or altered in any manner by anyone other than ALLEN TELECOM or an authorized outlet of ALLEN TELECOM, or if the defect, malfunction or failure of the product was caused by damage by lightning, flood or other acts of nature or by power surges, or from unreasonable use, or from improper installation or application, or to any product which has not been maintained or used in accordance with the operating specifications set forth in ALLEN TELECOM's written instructions.

IMPLIED WARRANTIES OF MERCHANTABILITY OR FITNESS FOR ANY PARTICULAR PURPOSE ARE LIMITED IN DURATION TO THE WARRANTY PERIOD SPECIFIED ABOVE.

UNDER NO CIRCUMSTANCES SHALL ALLEN TELECOM BE LIABLE FOR ANY CONSEQUENTIAL DAMAGES FOR BREACH OF THIS WARRANTY OR OF ANY IMPLIED WARRANTY.

Some states do not allow limitation on how long an implied warranty lasts, so the above limitation may not apply to you. Some states do not allow the exclusion or limitation of incidental or consequential damages, so the above limitation or exclusion may not apply to you. This Warranty gives you specific legal rights, and you may also have other rights which vary from state to state.

ALLEN TELECOM neither assumes nor authorizes any person to assume for it any obligation or liability other than as herein expressly stated.

Contents

Page

Volume 1: Installation Procedures

Quick Start Checklist ix
1. Introduction 1-1
2. Preliminary Decisions 2-1
3. Installing the Hardware 3-1
4. Setting Up for Initial Operation 4-1
5. Installing the Remote Link 5-1
6. Optimizing Performance 6-1
7. Multi-Hop™ Operation 7-1
8. Operation with Multi-Donor™ Units 8-1
9. *RESERVED FOR FUTURE USE* 9-1
10. Combined Operation: Multi-Hop / Multi-Donor 10-1

Volume 2: Operating Procedures

1. Introduction 1-1
2. SET Command 2-1
3. System Monitoring Commands 3-1
4. Special Commands 4-1

Volume 3: Technical Information

1. Introduction 1-1
2. EAC-2000™ Description 2-1
3. Specifications and Drawings 3-1

Appendices

A. Troubleshooting Guide A-1
B. Isolation B-1
C. Reference Oscillator Adjustment C-1

Glossary Glossary-1

Index Index-1

Parts & Accessories Order Information Parts-1

AMPS
EAC-2000™ Manual

Volume 1
Installation Procedures

27-7655-2

Issue 12/95

© Copyright 1995 Allen Telecom Systems
All Rights Reserved

ALLEN TELECOM GROUP
SYSTEMS
DIVISION™

Field Support

If you need technical assistance with the AMPS EAC-2000™, contact Allen Telecom Systems at one of the following telephone numbers:

Extend-A-Cell HOTLINE:		(800) 800-EAC4 (3224)
	or	(216) 349-8413
Systems Engineering Department:		(216) 349-8413

Contents

Page

List of Figures vi

Quick Start Checklist vii

1. Introduction 1-1

1.1 About This Volume 1-1
1.1.1 Contents 1-1
1.1.2 Terminology 1-3
1.2 About the AMPS EAC-2000™ 1-4
1.2.1 Use of Boosters 1-4
1.2.2 Frequency Allocation 1-4
1.2.3 EAC-2000 Operation 1-4

2. Preliminary Decisions 2-1

2.1 Introduction 2-1
2.2 Use of Multi-hop™ Configuration or Multi-donor™ Units 2-2
2.3 Site Requirements 2-2
2.3.1 Location 2-2
2.3.2 ac Service 2-3
2.3.3 Space 2-3
2.3.4 Mounting Surface 2-4
2.4 Antennas 2-4
2.4.1 Type 2-5
2.4.2 Placement 2-6
2.4.3 Measuring Signal Level and Isolation 2-9
2.5 Selecting Channels 2-11
2.5.1 Identifying the Donor Control Channel 2-11
2.5.2 Selecting a Boosted Control Channel 2-12
2.5.3 The Revertive Control Channel Option 2-13
2.5.4 The Substitute Control Channel 2-13
• Disabling the Substitute Control Channel 2-14
• Enabling the Substitute Control Channel 2-14
2.5.5 Selecting the Directed Retry Channels 2-15
2.5.6 Selecting Donor Voice Channels 2-16
2.5.7 Selecting Boosted Voice Channels 2-17

Page

3. Installing the Hardware 3-1

3.1 Introduction 3-1
3.2 Mechanical Installation 3-4
3.2.1 Uncrating the Equipment 3-4
3.2.2 Mounting the Cabinet 3-4
3.2.3 Securing the Doors 3-5
3.3 Connecting the EAC-2000 to ac Power 3-6
3.4 Installing the Antennas 3-6
3.4.1 Connecting the Antennas 3-7
3.5 Connecting External Alarms/Controls (Optional) 3-8

4. Setting Up for Initial Operation 4-1

4.1 Introduction 4-1
4.2 Powering Up the EAC-2000 4-3
4.3 Powering Down the EAC-2000 4-4
4.4 Connecting a Local Terminal 4-4
4.5 Becoming Familiar with System Commands 4-6
4.5.1 Basic Commands 4-6
4.5.2 Using the SET Menus 4-10
4.6 Setting Initial Parameters 4-12
4.6.1 Checking System Status 4-12
4.6.2 Entering the Site ID 4-13
4.6.3 Setting the Donor Control Channel 4-14
4.6.4 Setting the Boosted Control Channel 4-15
4.6.5 Setting the Directed Retry Channels 4-15
4.6.6 Setting the Donor Voice Channels 4-16
4.6.7 Setting the Boosted Voice Channels 4-18
4.6.8 Programming Alarms and Thresholds 4-18
4.6.9 Programming the Modem Mobile MIN, Mobile Power Step, and Passwords 4-24
4.7 Tuning Transmitter Combiner and Setting Output Power 4-25
4.7.1 Adjusting Combiners and Power Levels for PAs 1–5 and 7-11 4-25
4.7.2 Adjusting the PA 6 Power Level 4-28
4.7.3 Setting Reverse Path Output Power (If Necessary) 4-29
4.7.4 Setting PA Power Low Alarm Points 4-30
4.7.5 Setting Time and Report Values 4-31

Page

5. Installing the Remote Link 5-1

5.1 Introduction 5-1
5.2 Setting Up Service 5-3
5.3 Programming the Mobile Radio 5-4
5.4 Checking Out the Mobile 5-4
5.5 Testing the Remote Link 5-5
5.5.1 EAC-2000 Answering 5-5
5.5.2 EAC-2000 Originating 5-6

6. Optimizing Performance 6-1

6.1 Introduction 6-1
6.2 Determining Hand-in and Hand-back Thresholds 6-1
6.3 Setting Hand-in and Hand-back Thresholds 6-2

7. Multi-Hop™ Operation 7-1

7.1 Introduction 7-1
7.2 How Multi-Hop Operation Works 7-1
7.3 Installing the EAC-2000 in Multi-Hop Configuration 7-2
7.3.1 Achieving Antenna Isolation and Signal Level 7-3
7.3.2 Enabling the Multi-Hop Feature 7-3
7.3.3 Selecting Boosted Channels for Each Unit 7-4
7.3.4 Setting the Hand-back Threshold 7-6
7.3.5 Reviewing the Hand-in Threshold 7-9

8. Operation with Multi-Donor™ Units 8-1

8.1 Introduction 8-1
8.1.1 Purpose of Multi-Donor Units 8-1
8.1.2 MDU Operation 8-2
8.2 Installing the EAC-2000 for MDU Operation 8-2
8.2.1 Achieving Adequate Signal Level at the EAC-2000 8-3
8.2.2 Achieving Adequate Signal Level at the MDU 8-3
8.2.3 Setting the Multi-Donor Activation Threshold 8-4
8.2.4 Assigning a Booster Link Channel 8-4

9. Reserved for Future Use

Page

10. Combined Operation: Multi-Cabinet / Multi-Hop / Multi-Donor . 10-1

10.1 Introduction 10-1
10.2 Installing the EAC-2000 for Combined Operation 10-2
10.2.1 Requirements 10-2
10.2.2 Channel Assignments 10-2

List of Figures

Figures Page

1-1. Important Terms Used in This Manual 1-3
1-2. System Operation 1-5
2-1. Pre-Installation Checklist 2-1
2-2. Recommended Space 2-3
2-3 Typical Antenna Installation 2-8
2-4 Antenna Isolation v. Horizontal Separation 2-9
2-5 Antenna Isolation v. Vertical Separation 2-10
3-1. Hardware Installation Checklist 3-2
3-2. EAC-2000, Front View (Door Removed) 3-2
3-3. EAC-2000, Back View (Door Removed) 3-3
3-4. Outdoor Cabinet Footprint 3-4
3-5. Antenna Connectors 3-7
3-6. External Alarm/Control Connector Pin Out 3-8
3-7. Electrical Specifications for Inputs and Outputs 3-9
3-8. Typical Wiring for External Inputs and Outputs 3-11
4-1. Setup Checklist 4-2
4-2. EAC-2000 Breakers 4-3
4-3. Breaker Locations 4-3
4-4. Location of Local Terminal Connector 4-4
4-5. Command Definitions 4-6
4-6. System Commands 4-8
4-7. SET Command Menu Map 4-11
4-8. Combiner Cavity 4-25
4-9. Location of PA Power Potentiometer 4-27
5-1. Remote Link Installation Checklist 5-3
7-1. Example of Valid Channel Set 7-5
10-1. Combined Configuration Example 10-1
10-2. Channel Assignment Example 10-3

Quick Start Checklist

This checklist provides a brief summary of steps for starting up the AMPS EAC-2000™. For detailed instructions, see Sections 1–6. For special configurations and options, see Sections 7–10.

Pre-Turn-on Checklist (See Section 2)

- ☐ 4 antennas: M1, M2, D1 and mobile
- ☐ Isolation: greater than 75 dB measured between D1 and M1, M2.
- ☐ Signal level: -75 dBm or greater from donor on D1 antenna.
- ☐ ac power: 240 V/20 A service wired to power panel in rear.
- ☐ Channel separation: Boosted channel set assigned with no boosted channel closer than 3 channels (90 kHz) to any donor channel. Separation by 150 kHz is recommended.
- ☐ Mobile MIN assigned for programming of modem mobile.
- ☐ Donor channels: Have list of donor channels and SAT ready.

Powering Up (See Section 4)

1. Connect terminal or computer RS-232 port to 25-pin D female connector on controller board using supplied cable. Set up terminal for 9600-E-7-1, **no** CTS/RTS, **no** X-on/X-off.
2. Turn on rear panel ac breaker.
3. Turn on power supply ac breaker(s). Be sure the 6/12 V power switch is on.
4. The terminal should "come alive" and display *CONSOLE LOCKED*. Press **ENTER**, and receive the banner showing the firmware revision and the unit serial number. At the password prompt, enter the default password **1234** and **<CR>**.

Continued . . .

Programming Initial Parameters (See Sections 4, 5, and 6)

1. Type **SSS <CR>**. (Nothing should show DISABLED. If anything shows disabled, refer to Appendix A, Troubleshooting Guide.)

2. Type **ALA <CR>**. (There should be no alarms. If there are any OUT OF SERVICE or memory alarms, refer to Appendix A.)

3. Type **SET <CR>** and go into submenu C, System Parameters.

4. Enter submenu A and program the site ID.

5. Enter submenu B and program the donor and boosted control channels. Decide how the control channel is to act when all channels are busy.

6. Enter submenu C and program the boosted voice channel numbers for channels 2–5 and 7-11, if installed.

7. Program the donor voice channels into list A, B, or C, depending upon the SAT used at the donor. To enter a 15-channel set, enter a plus sign (+) before the first channel number. Delete unneeded channels.

8. Enter the Modem Control submenu D and program the modem mobile MIN that has been assigned. Calls made to and from this number will not be transferred to the booster, but will be trapped-out and handled directly by the donor. Also set the modem mobile power step to the desired level.

9. Turn off the system power and connect power measuring equipment to the M1 antenna port. Turn system power back on. From the SET Main menu, enter submenu **B**, Power Amplifiers. Select menu entry **K** (Key Forward PA) for combiner tuning. Select amplifiers 1-5 and 7-11, if installed. Use a screwdriver to adjust the combiner for maximum power output. Use a small screwdriver or adjusting tool to adjust the PA power pot on the front of each PA for desired power out of the unit.

10. Turn off the system power, connect the power measuring equipment to the M2 antenna port, and turn the system power back on. From the SET Main Menu, enter submenu **B**, Power Amplifiers. Select menu entry **K** (Key Forward PA) for combiner tuning and select PA 6. Adjust the power to be equal to the voice channel power.

11. Remove the test equipment and use **<CTRL> X** to exit the SET menu completely. Press **<CR>** at the question prompt.

Continued . . .

Programming Initial Parameters (Continued)

12. From the command entry level >, use the **TIM** command to set the date and time.

13. From the command entry level >, enter **DCS=0**, **DCH=0**, and **ALA=0** to reset the report values.

Completing the Installation

1. Connect the 4 antennas. The unit is now operational!

2. Type **SCS <CR>** and make some calls. You will see your MIN displayed on call originations and answers.

3. Connect the handset to the connector on the front of the mobile shelf (see Section 5).

4. Program hand-in/hand-back thresholds as desired (see Section 6).

5. After completing installation and setup, secure cabinet doors.

See Sections 7–10 for special configurations and options.

Section 1. Introduction

1.1 About This Volume

1.1.1 Contents

This volume, the first of three volumes pertaining to the AMPS EAC-2000™, contains detailed procedures for installing the EAC-2000. This volume has been divided into a Quick Start Checklist and 12 sections, described below. Volume 2 contains operating procedures, and Volume 3 contains technical information. A set of appendices (described below), a glossary, and an index accompany the three volumes.

Introductory Information

- Quick Start Checklist: Brief summary of installation and setup procedures.

- Section 1. Introduction: Contents of this volume, key terms, and a general introduction to the AMPS EAC-2000.

- Section 2. Preliminary Decisions: Factors to consider before you begin installation.

Basic Installation

- Section 3. Installing the Hardware: Procedures for mechanical, electrical, and antenna installation and connection of external alarms or controls.

- Section 4. Setting Up for Initial Operation: Procedures for powering up the system, connecting a local terminal, programming parameters, tuning the transmitter combiner, and setting output power.

- Section 5. Installing the Remote Link: Procedures for setting up, programming, and checking out the mobile, and testing the remote link.

- Section 6. Optimizing Performance: Procedures for setting hand-back and hand-in thresholds to optimize booster performance.

1.1.1 Contents (Continued)

Special Configurations and Options

- **Section 7. Multi-Hop™ Operation:** Procedures for installing the EAC-2000 in a Multi-Hop chain.

- **Section 8. Operation with Multi-Donor™ Units:** Special installation procedures when using the EAC-2000 with Multi-Donor Units.

- ***Section 9. Reserved for Future Use.***

- **Section 10. Combined Operation: Multi-Cabinet / Multi-Hop / Multi-Donor:**

Appendices

- **Appendix A. Troubleshooting Guide:** Recommendations for resolving selected installation and operation problems.

- **Appendix B. Isolation:** Recommendations for achieving antenna isolation.

Parts & Accessories Order Information: Procedures for ordering parts and accessories for units that are under warranty and for units on which the warranty has expired.

For detailed descriptions of all EAC-2000 operating parameters and procedures for setting them, refer to Volume 2. For a more detailed description of the EAC-2000 and how it works, refer to Volume 3.

1.1.2 Terminology

Figure 1-1 lists key terms used in this volume. Additional terms and acronyms are defined in the Glossary.

Figure 1-1. Important Terms Used in This Manual

Term	Definition
AMPS	Advanced Mobile Phone System. Cellular standard that provides compatible operation in the 824–849 and 869–894 MHz band.
Boost	To receive, amplify, and reradiate signals to fill in weak coverage areas.
Booster	A system that boosts or repeats.
Booster Coverage Area	The area where subscribers obtain coverage through the booster.
Donor Cell Site	The cell site in communication with the booster.
Donor Control Channel	The control channel used between the cell site and the booster (and all the mobiles in direct contact with the cell site).
Boosted Control Channel	The control channel used between the booster and the mobile in the booster coverage area (a different frequency than the donor control channel).
EAC-2000™	The trademarked name for a booster made by Allen Telecom Systems.
Forward Path	The path taken by the RF signal transmitted by the donor cell, which is received, amplified, and reradiated by a booster and received ultimately by a subscriber in the booster coverage area.
Repeater	Synonymous with booster, usually applied to boosters that translate frequencies. The EAC-2000 is type-accepted as a repeater.
Reverse Path	The path taken by the RF signal transmitted by a subscriber mobile in the booster coverage area, which is received, amplified, and reradiated by a booster and received ultimately by the donor cell site.

1.2 About the AMPS EAC-2000

This section provides a brief overview of how the EAC-2000 operates. For a more detailed discussion, refer to Volume 3, Technical Information.

1.2.1 Use of Boosters

Cellular telephone systems transmit signals in two directions between cell sites and mobile telephones within the signal coverage area. The signal path from the cell site to the mobiles is called the forward path, and the path from mobiles to cell site is the reverse path.

If weak signal transmissions occur within the coverage area because of indoor applications, terrain obstructions, or distance from the transmitter, a relatively inexpensive way to extend transmission range is to install a signal booster that receives the signal, amplifies it, and reradiates it. (See Figure 1-2.)

1.2.2 Frequency Allocation

AMPS cellular systems use 824–849 MHz for reverse and 869–894 MHz for forward transmissions. These frequency bands are divided into systems A and B, each with designated control channels and voice channels.

1.2.3 EAC-2000 Operation

The EAC-2000 booster uses up to 21 individual narrowband amplifiers: 1 (reverse) for the control channel, up to nine (forward and reverse) for voice channels, and one amplifier (forward only) for hand-in and data message transmissions. The reverse half of this board acts as a locate receiver. There are two amplifiers for each IF board (forward and reverse); each is a single channel (30 kHz) wide and has dual synthesizers that control input and output channels independently.

The simplified diagram in Figure 1-2 illustrates one board (forward and reverse paths) being used for the control channel, and one board (forward and reverse) being used for one voice channel.

1.2.3 EAC-2000 Operation (Continued)

Figure 1-2. System Operation

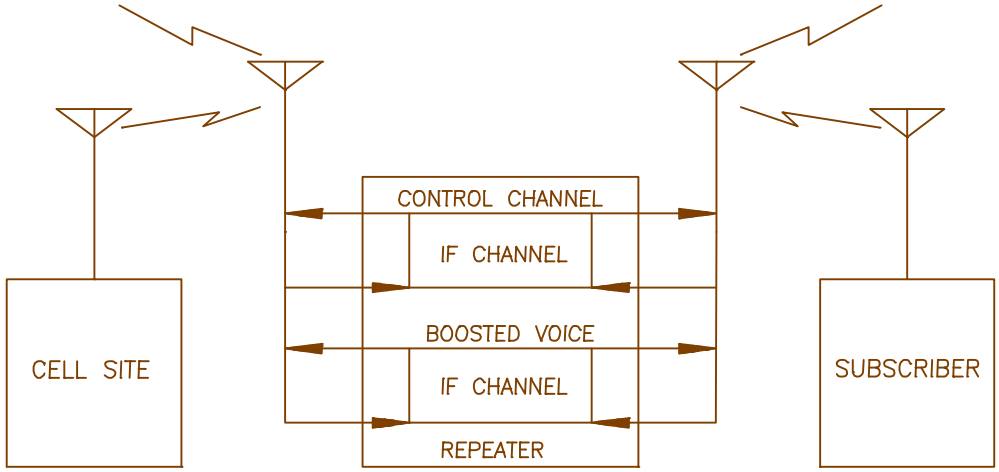

Boosting Control Channels. The EAC-2000 monitors the donor control channel to obtain system-specific information. It generates a control channel data stream and transmits it on another control channel frequency. Mobiles that are unable to receive the original channel then lock onto the boosted control channel and communicate with the cell site through the booster. Control channel translation is possible because the mobiles always lock onto the strongest control channel.

Boosting Voice Channels. The amplifiers for boosting voice channels are keyed as needed when voice channel activity is detected in the boosted coverage area. The EAC-2000 identifies mobiles in the booster coverage area by two methods: one for identifying mobiles that place or answer calls from within the booster coverage area and another for identifying mobiles that enter the area with a call in progress.

1.2.3 EAC-2000 Operation (Continued)

When a call is placed or answered from within the booster coverage area, the following sequence occurs:

1. The mobile accesses the reverse boosted control channel. The EAC-2000 receives the access, then accesses the reverse donor control channel.

2. The EAC-2000 waits for the corresponding voice channel designation message on the forward channel.

3. The EAC-2000 modifies the voice channel designation message by substituting one of its boosted voice channels for the donor voice channel, thus sending the mobile to one of the boosted voice channels.

4. A boost path is set up between the mobile and the primary donor cell site, with the mobile operating on the boosted voice channel, the donor operating on the donor voice channel, and the EAC-2000 translating and boosting between the two.

To identify mobiles that may drive into the boosted coverage area with a call in progress, the EAC-2000 scans the donor voice channels and maintains a Received Signal Strength Indicator (RSSI) average for each channel. If the average RSSI exceeds a preset threshold, the EAC-2000 hands the mobile to one of the boosted voice channels.

Boosting to Multiple Donor Cells. To provide for situations in which in-progress calls may be linked to various neighboring cell sites (multi-donor operation), the system allows for entry of three separate **donor voice channel lists**, one for each possible Supervisory Access Tone (SAT) frequency. **Note that the donor antenna system at the EAC-2000 must be specifically designed for multi-donor operation.**

If the booster is adjacent to a single cell site, that cell site is referred to as the **donor cell**, and the control channel of that cell site is the **donor control channel**. The voice channels used in the donor cell may be entered into the donor voice channel list with the SAT of that cell site to handle mobiles that drive between the donor and booster with a call up.

1.2.3 EAC-2000 Operation (Continued)

If the booster is adjacent to several cell sites and there are donor antennas pointing at these cell sites, the control channel of one of the cell sites is chosen as the donor control channel, and this cell is then referred to as the **primary donor cell**. The voice channels of all the neighboring cells are entered into the scan list with the SAT of the neighboring cells. **Signal strength at the D1 antenna port must be identical from all neighboring cell sites.**

Calls placed or answered from within the booster coverage area (identified by decoding the data streams) are boosted back to the primary donor cell. Calls handed in (identified by channel scanning) are boosted back to the cell on which the call was in progress.

Ending the Boost. The EAC-2000 monitors for SAT fade, weak mobile RSSI, or mobile release to determine when to hand back the mobile or terminate the translation through the booster. If weak RSSI is detected, the EAC-2000 then sends the mobile a hand-off message directing it back to the original donor voice channel. This allows the mobile to be covered as it drives out of the booster coverage area back into the donor cell site coverage area.

Keeping the Call If the Hand-back Is Unsuccessful. When a mobile is heading away from the booster coverage area, it should be handed back to the donor cell site only if there is a strong enough signal to support the transmission. If the mobile is heading away from the donor cell, handing it back to that cell would result in a weak signal. To handle this situation, the EAC-2000 uses the **grab-back process**.

Shortly after sending the hand-off message, the EAC-2000 tries to grab the mobile back by sending it a second hand-off message directing it back to the boosted voice channel. Since the mobile responds to the strongest signal, it will ignore the grab-back message if the signal from the donor is stronger. If the booster signal is stronger, the mobile will come back to the booster voice channel. If the mobile's RSSI is weak, the EAC-2000 will periodically send hand-back/grab-backs but continue to handle the mobile until the signal level is unusable.

Section 2. Preliminary Decisions

2.1 Introduction

Before the EAC-2000 can be installed, preliminary decisions must be made about the following:

- Use of Multi-hop configuration
- Booster site
- Antenna placement
- Control and voice channels to be used

As an installer, you may be involved in some or all of these decisions. The checklist in Figure 2-1 provides a brief overview of preparations to be made prior to installing the EAC-2000.

Figure 2-1. Pre-Installation Checklist

Checklist

- ☐ 1. Coverage area and distance from base station identified. (Sec. 2.3.1)
- ☐ 2. Electrical service verified for installation site. (Sec. 2.3.2)
- ☐ 3. Site selected in accordance with EAC-2000 weight and space requirements. (Secs. 2.3.3 and 2.3.4)
- ☐ 4. M1, M2, D1 and mobile modem antennas selected and installed. (Sec. 2.4)
  - ☐ Minimum vertical separation of antennas achieved.
- ☐ 5. Antenna isolation and signal levels from the cell site measured. (Sec. 2.4.3)
- ☐ 6. RF channels selected: (Sec. 2.5)
  - ☐ Donor control channel
  - ☐ Boosted control channel
  - ☐ Directed retry channels (at least one of the six directed retry channels should be assigned)

2.2 Use of Multi-Hop™ Configuration or Multi-Donor™ Units

Multi-hop operation involves setting up two or more EAC-2000 units to operate together in a line. This configuration is described in greater detail in Section 7.

Use of Multi-Donor Units involves placing a reverse-translating Multi-Donor Unit at cell sites adjacent to the booster to allow mobiles to be handed-off to the appropriate cells as they leave the booster area. Operation with Multi-Donor Units is described in Section 8.

If either of these arrangements is to be used, system parameters will need to be set accordingly. Minimum signal level requirements will also be affected.

2.3 Site Requirements

The site chosen for the EAC-2000 must meet requirements related to location, electrical service, space, and mounting surface, as described below.

2.3.1 Location

Distance from Donor Cell. If a line-of-sight path between donor cell and booster is maintained and a high-gain 6- to 10-foot (2- to 3-meter) dish antenna is used, the EAC-2000 may be placed up to 80 miles (130 km) away from the donor cell. (Using frequency translation for both voice and control channels makes it possible to place the booster farther from the donor cell than is possible with nontranslating boosters.)

Distance from Antennas. The unit should be placed as close as possible to the antennas to avoid excessive cable loss. Losses should be kept to 3 dB or less for each antenna cable.

2.3.2 ac Service

The following ac service is required:

- 240 Vac
- single-phase
- 20-amp minimum service

2.3.3 Space

The EAC-2000 unit is approximately 2 ft (W) x 3 ft 5 in (D) x 5 ft 7 in (H) *(61 cm x 104 cm x 170 cm)*. Allow space for the unit itself plus additional space for access to the front and rear doors.

Figure 2-2. Recommended Space

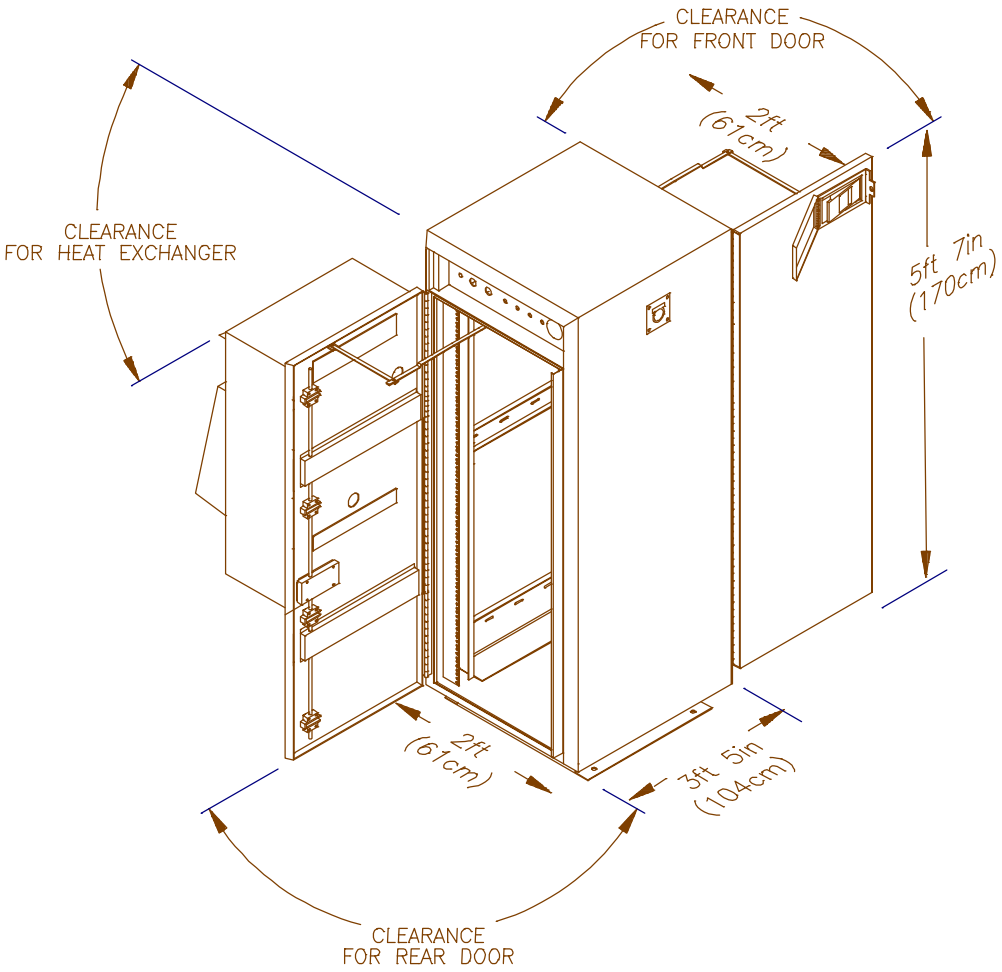

2.3.4 Mounting Surface

The outdoor cabinet should be bolted to a concrete or other weatherproof pad capable of supporting approximately 250 pounds per square foot (1220 kg per square meter). Adequate drainage away from the pad should be provided to prevent water from accumulating underneath the cabinet.

2.4 Antennas

The EAC-2000 requires four antennas:

- D1 antenna: Primary antenna facing donor cell site(s), used for—
  - Reception of control and voice channel signals from donor cell site(s).
  - Transmission of control and voice signals back to cell site(s).

- M1 antenna: Primary antenna facing mobiles in the booster coverage area, used for—
  - Transmission of boosted control channel and boosted voice channels to mobiles.
  - Diversity reception from mobiles.
  - Transmission of hand-back messages to mobiles.

- M2 antenna: Second antenna facing mobiles in the booster coverage area, used for—
  - Sending hand-in and grab-back messages to mobiles.
  - Diversity reception from mobiles.
  - Sending data messages to multi-hop EAC-2000s and Multi-Donor Units.

- Mobile antenna: Antenna for the installed cellular mobile. Used for—
  - Receiving and transmitting signals from any cell site in the system.

Ensure that the proper antenna type and placement have been selected for each antenna.

2.4.1 Type

The antennas for the booster area should be chosen by the same criteria as used for a cell site. A typical installation might use the following antennas:

- D1: One high-gain directional antenna pointed toward the donor cell.

- M1 and M2: Two identical directional or omnidirectional antennas.

  A directional antenna facing away from the donor's coverage area is recommended for installations where the booster is located near the edge of the donor cell's coverage area. This arrangement prevents the unnecessary boosting of mobiles that are in the donor cell's primary coverage area. It also allows fewer channels of equipment to be used at the booster location.

  Omnidirectional antennas are appropriate for most other applications.

  ☞ NOTE: Regardless of the type of antenna chosen, the M1 and M2 antennas must have identical gain and patterns, and be installed to cover the same area.

- Mobile: A low-gain or YAGI base station antenna.

2.4.2 Placement

Requirements. Antenna locations must meet the following requirements for minimum signal level, physical separation, and isolation.

- **Minimum Signal Level:** The minimum signal level from any cell to be used as a donor must be -75 dBm at the D1 antenna connector on the EAC-2000. The minimum signal level from the donor cell must be at least -105 dBm at the mobile antenna feed.

> **Multi-hop configurations:** An EAC-2000 not adjacent to the donor requires a forward signal level of at least -70 dBm (at the D1 antenna connector) from the previous EAC-2000 in the chain. Each booster along the path must be able to communicate only with the previous and next booster. They are not required to be able to receive from or transmit back to the donor cell site.
>
> **Multi-Donor Units:** The RF path between the M2 antenna and the Multi-Donor Unit "booster link antenna" must be such that the Multi-Donor Units can receive at least a -100 dBm signal when the EAC-2000 transmits using PA 6.

- **Physical Separation:** For diversity operation, the M1 and M2 antennas should be physically separated by 10 feet *(3 m)* horizontally or 3 feet *(1 m)* vertically.

  ☞ NOTE: Even if diversity reception is not required, both the M1 and M2 antennas must be installed, since both antennas are used to transmit to the boosted mobiles.

2.4.2 Placement (Continued)

- **Isolation:** Isolation between the D1 and M1 and between the D1 and M2 antennas **must be at least 75 dB.** Isolation between the mobile antenna and all of the others **must be at least 60 dB.**

  Figure 2-3 shows a typical installation. M1 and M2 are placed highest on the tower to achieve the best coverage to the boosted area. D1 is placed below M1 and M2. At least 50 feet *(15 m)* of vertical separation is usually needed to meet the isolation requirement.

  ☞ NOTE: The isolation achieved at a given separation will vary greatly depending upon the type of antennas, nearby reflections, etc. Fifty feet *(15 m)* vertical separation may not be enough in all cases.

  D1 must be placed high enough to receive the required minimum signal level from the donor. The mobile antenna can usually be placed close to the ground. At least 35 feet *(11 m)* vertical separation between the mobile antenna and the others is usually needed, however, more may be required in some installations.

2.4.2 Placement (Continued)

Figure 2-3. Typical Antenna Installation

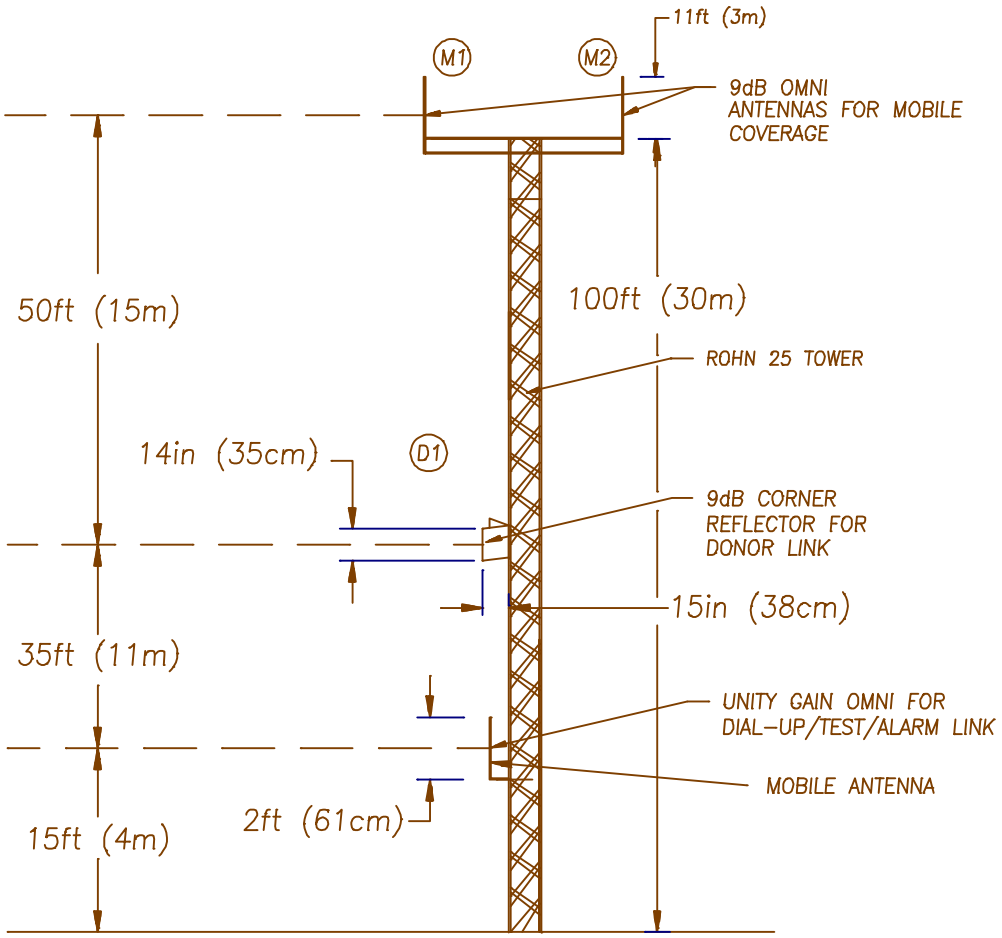

2.4.3 Measuring Signal Level and Isolation

To verify the correct placement and alignment of the antennas, it will be necessary to measure the signal level from the donor cell site (on the selected donor control channel) and the isolation between the various antennas to ensure they meet the required levels.

To measure the donor control channel signal level—

- connect a communications service monitor or some other frequency selective measuring instrument to the D1 antenna; monitor the control channel from the donor cell;

- adjust the orientation of the D1 antenna to peak this reading; at least -75 dBm is required.

To measure antenna isolation—

Antenna isolation can be measured using a spectrum analyzer and a tracking generator. These functions are often combined in cellular communications monitors.

The tracking generator output is applied to the coax connector going to one of the system antennas, while the spectrum analyzer input is connected to one of the other system antennas. The tracking generator output level should be set to maximum (usually about 0 dBm), with the spectrum analyzer set to check both the transmit and receive ends of the band. If a 0 dBm signal is used as the source, the dBm reading on the analyzer will be equal to the amount of isolation achieved between the two antennas.

☞ NOTE: Isolation is usually frequency dependent, with several nulls and peaks possible in each band. The highest peak in either band defines the minimum isolation that is achieved with a particular antenna installation.

2.4.3 Measuring Signal Level and Isolation (Continued)

Signals from the cellular system will likely be stronger than the sweep signal received from the tracking generator, and difficulty may be experienced in measuring the actual isolation.

Many spectrum analyzers have difficulty reading signals below -60 to -70 dBm when sweeping a broad bandwidth. In this case, the band may be swept in smaller frequency segments, or a separate signal generator with higher possible output power may be substituted for the tracking generator. The signal generator frequency and amplitude can be manually changed to avoid conflict with existing strong signals from the donor and other cell sites.

The signal generator should be manually swept through both the low split and the high split bands to determine the minimum isolation point.

To measure isolation—

1. Supply a known signal level of about 0 to +20 dBm across the band into one of the antenna feeds (M1, D1, or mobile).

2. Using test equipment, measure the signal level received on the other antenna feeds.

3. Adjust antenna locations and orientations to achieve the desired antenna isolations.

4. Move the signal source to other antennas, and recheck the isolation. Be sure to check both the forward and the reverse bands.

5. If the D1 antenna has been repositioned, recheck the received donor control channel signal level to verify that it exceeds -75 dBm.

6. Record these measurements.

Refer to Appendix B for a more detailed procedure for measuring isolation.

2.5 Selecting Channels

Before beginning to install the hardware, identify the various channels on which the system will operate:

- Donor control channel
- Boosted control channel
- Substitute control channel (if Revertive Control Channel Option is enabled)
- Donor voice channels (primary and neighboring)
- Boosted voice channels
- Directed retry channels

Make note of all selected channels. They will be entered as system parameters during installation (Volume 1, Section 4). Control channel parameters are listed under the Control Channels Menu, shown here with all available selections. Refer to this menu for sections 2.5.1 through 2.5.5.

Control Channels Menu

		Default Values
A	Donor Control Channel	337
B	Boosted Control Channel	340
C	RF Board to Use for Control Channel	1
D	Control Channel State During "All Channels Busy"	DIRECTED RETRY
E	Directed Retry Channels	LIST
F	Back-up Control Channel Option	DISABLED
G	Revertive Control Channel Option	DISABLED
H	Substitute Control Channel	DISABLED
I	Booster Link Channel	550
J	Booster Link Channel - Previous EAC	571

2.5.1 Identifying the Donor Control Channel

The donor control channel (selection A) is the control channel of the primary cell site with which the EAC-2000 will communicate.

- When the booster is adjacent to a single cell site, the control channel of that cell site is the donor control channel.

- When the booster is adjacent to several cell sites, the control channel of the cell site with the most unused channels should be chosen. (This cell is then referred to as the primary donor cell.) More than one cell site being received by a donor antenna can result in unwanted hand-offs by the cellular system, causing dropped calls.

2.5.2 Selecting a Boosted Control Channel

The boosted control channel (selection B) is the control channel that will be used in the EAC-2000 coverage area. Select a channel that meets the following requirements:

- Must be one of the dedicated control channels:
  - System A = channels 313–333
  - System B = channels 334–354
- Must be different from the control channels used in cells adjacent to the booster to avoid interference.

> ☞ There must be at least a 3-channel spacing between any boosted channel and any donor channel.

2.5.3 The Revertive Control Channel Option

When the Revertive Control Channel Option (selection **G**) is enabled, the EAC-2000 continues to repeat the control channel (forward and reverse) when all of the normal voice channels become occupied. If another call goes through, the control channel equipment is redesignated to operate as voice, and the last candidate is assigned to and boosted by the control channel equipment.

Because of the fixed-tuned combiner used in the forward direction, the mobile operates in voice mode on the boosted control channel. The EAC-2000 translates the boosted control channel to the originally assigned donor voice channel. The donor side of the EAC-2000 channels is not fixed in frequency.

When the call on the control channel ends, the equipment reverts to repeating the control channel. If a call on one of the normal voice channels ends, the EAC-2000 hands-off the mobile operating on the control channel equipment to the available voice channel equipment (this is referred to as call transfer). The control channel equipment then reverts to repeating the control channel.

2.5.4 The Substitute Control Channel

If the Revertive Control Channel Option is enabled, the Substitute Control Channel parameter (selection H) will appear.

This parameter may be enabled to keep mobiles not in a call from roaming during times when the control channel equipment is being used to boost a voice call. The EAC-2000 uses channel 6 equipment (the only RF elements not involved in boosting a voice call) to put the substitute control channel on the air.

Disabling the Substitute Control Channel

The Substitute Control Channel parameter may be disabled. In this case, the Revertive Control Channel option will still operate. That is, calls will be handled by the control channel equipment and transferred to voice channel equipment when it becomes available. However, during this time no control channel will be transmitted in the booster coverage area.

This selection would be appropriate if there is sufficient control channel coverage from other cells throughout the majority of the booster coverage area, or if it is permissible to allow mobiles to roam.

Enabling the Substitute Control Channel

If substitute control channel transmission is desired, a channel must be chosen and entered. Choose a channel that meets the following criteria:

- Separated from the boosted control channel by at least 90 kHz. (This prevents interference. There is no advantage to greater separation.)

- Different from the donor control channel, and separated from it by at least 90 kHz.

- Different from the control channels of other cells that may provide coverage in the booster coverage area.

2.5.5 Selecting the Directed Retry Channels

The directed retry channels parameter (selection E) is probably the best option for most EAC-2000 installations. The parameter is a factory-set default and is one of five options available under selection D (Control Channel State During "All Channels Busy") of the Control Channels Menu.

When the EAC-2000 is busy, the boosted control channel (or substitute control channel, if Revertive Control Channel Option is enabled) remains on the air. If more accesses or page responses come in, the EAC-2000 sends the mobile a special "directed retry" message. This message gives the mobile a list of up to six other control channels on which to attempt the access. These are the directed retry channels and are assigned by the customer.

The list of six channels is sent to the mobile in the directed retry message. The mobile will scan this set of channels and try its access on the strongest of the six channels.

☞ NOTE: The donor control channel and the control channel of cells adjacent to the boosted coverage area should be entered. The boosted control channel must *not* be in this list.

2.5.6 Selecting Donor Voice Channels

The donor and boosted voice channels can be accessed from the Voice Channels Menu, shown here with all available selections. Refer to this menu for sections 2.5.5 and 2.5.6.

Voice Channels Menu

		Default Values
A	Donor Voice Channels (5970 Hz SAT)	List
B	Donor Voice Channels (6000 Hz SAT)	List
C	Donor Voice Channels (6030 Hz SAT)	List
M	Donor Voice Channels (MULTIPLE SAT)	List
2	Boosted Voice Channel Position 2	361
3	Boosted Voice Channel Position 3	382
4	Boosted Voice Channel Position 4	403
5	Boosted Voice Channel Position 5	424
7	Boosted Voice Channel Position 7	445
8	Boosted Voice Channel Position 8	466
9	Boosted Voice Channel Position 9	487
10	Boosted Voice Channel Position 10	508
11	Boosted Voice Channel Position 11	529

The EAC-2000 allows three lists of donor voice channels to be entered, one for each possible SAT frequency. The lists are used to identify mobiles that may drive into the booster coverage area with a call already in progress (that is, already on a voice channel). The EAC-2000 scans the donor voice channels on the lists, looking for RSSI above a preset hand-in threshold.

2.5.6 Selecting Donor Voice Channels (Continued)

Identify the donor voice channels with the following guidelines in mind:

- All voice channels of the primary donor cell will be entered in the donor voice channel list with the SAT of the primary donor cell.

- The voice channels of neighboring cells will not be entered into the donor voice channel lists with the SATs of the neighboring cells unless the EAC-2000 donor antenna system has been configured for multi-donor operation.

- For a donor cell site to be included in the donor voice channel list, the signal level at the booster from that donor cell site must be the same as the primary donor. If the antenna installation is such that this criterion is not met for one of the neighboring cell sites, that cell's voice channels should not be entered in the list.

2.5.7 Selecting Boosted Voice Channels

You must select channels for the boosted voice channels. Note that the number of boosted voice channels is almost always smaller than the number of channels on the donor voice channel lists. For example, the primary donor cell may have 15 voice channels, and the EAC-2000 may have 9 voice channels.

Select an unused channel for each channel of equipment that is installed in the EAC-2000, according to the following guidelines:

- Select the boosted voice channels in the same manner as for a cell site.

- Consider channel reuse in the system when assigning the boosted control and voice channels.

- Be sure the channels are spaced at least 600 kHz apart to allow the combiner to operate properly.

- Be sure there is at least a 90 kHz separation between any boosted and any donor channel.

2.5.7 Selecting Boosted Voice Channels (Continued)

The following table illustrates proper channel separation:

If there is only one donor cell with voice channels...	1, 22, 43...
Closest allowable boosted channel set	4, 25, 47...
Channel sets not recommended	2, 23... 3, 24...

Example:

If there is only one donor cell and it uses voice channels 1, 22, 43..., then the closest spaced channel set that could be used for boosted voice channels would be 4, 25, 47.... The channel sets 2, 23... and 3, 24... could not be chosen because they are too close.

Section 3. Installing the Hardware

3.1 Introduction

This section provides instructions for—

- Mechanical installation
- Connecting ac power
- Installing the antennas
- Connecting external alarms/controls (optional)

The checklist in Figure 3-1 presents a brief overview of these installation procedures. For more detailed descriptions of the procedures, refer to Sections 3.2–3.5.

Figures 3-2 and 3-3 show front and back views of the EAC-2000 with the doors removed.

Figure 3-1. Hardware Installation Checklist

Checklist

☐ 1. EAC-2000 uncrated and contents checked. (Sec. 3.2.1)

☐ 2. Holes drilled in pad (if using expandable anchors). (Sec 3.2.2)

☐ 3. EAC-2000 positioned, using lifting equipment, and bolted in place. (Sec. 3.2.2)

☐ 4. With ac service breaker and all EAC-2000 switches and breakers off, ac electrical connections made. (Sec. 3.3)
- Green to ground
- White to neutral
- Black to 240 Vac (one side of ac service)
- Red to 240 Vac (other side of ac service)

☐ 5. Antennas connected; signal level and isolation measured/adjusted. (Sec. 3.4)

☐ 6. External alarms/controls connected, if required. (Sec. 3.5)

Figure 3-2. EAC-2000, Front View (Door Removed)

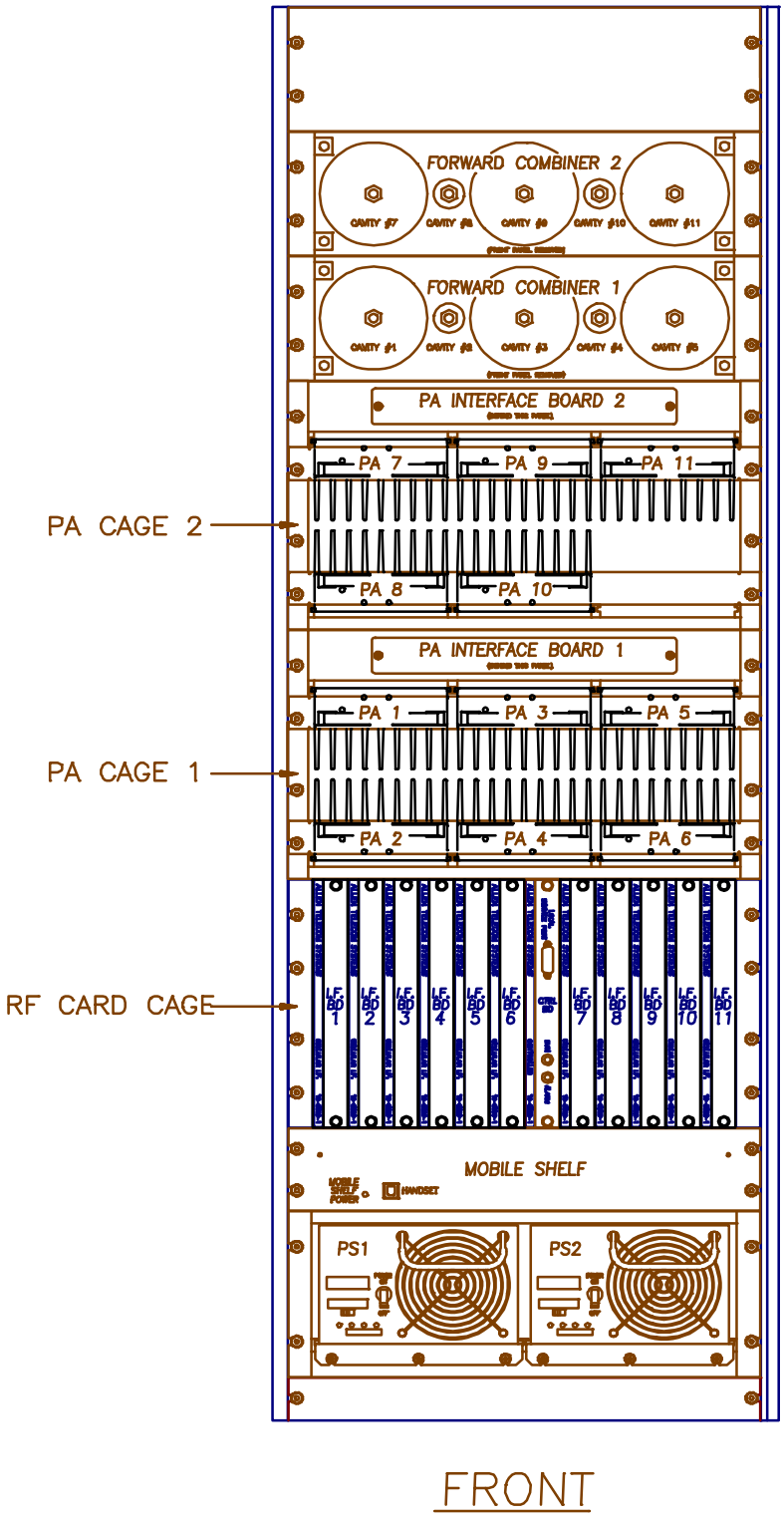

Figure 3-3. EAC-2000, Back View (Door Removed)

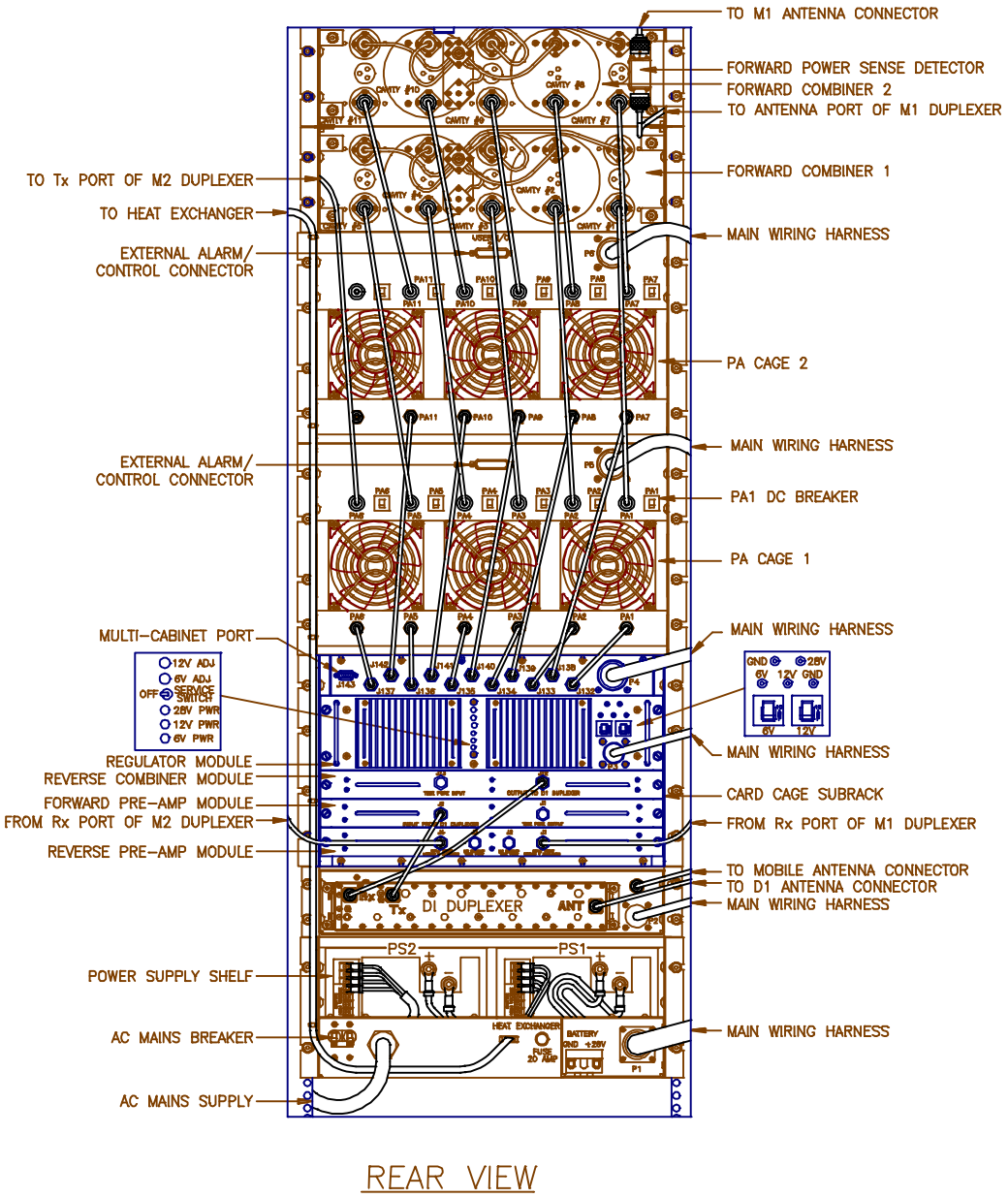

3.2 Mechanical Installation

3.2.1 Uncrating the Equipment

The container includes these items:

- The EAC-2000 unit
- EAC-2000 manual (Volumes 1, 2, and 3), power supply manual, mobile manual, and modem manual

Remove the shipping material from around the cabinet. Check the contents and take care that no hardware or manuals are misplaced.

3.2.2 Mounting the Cabinet

The mounting rails on the bottom of the cabinet provide clearance space under the cabinet to allow moisture to evaporate. Four 5/8 in. *(16 mm)* diameter holes are provided in the rails for bolting the cabinet to the pad. The preferred mounting method is to drill holes in the pad and use expandable anchors. Alternatively, bolts can be cast into the concrete. Mount the cabinet to the pad as follows:

1. If using expandable anchors, determine the bolt locations (see Figure 3-4) and drill holes in the pad.

Figure 3-4. Outdoor Cabinet Footprint

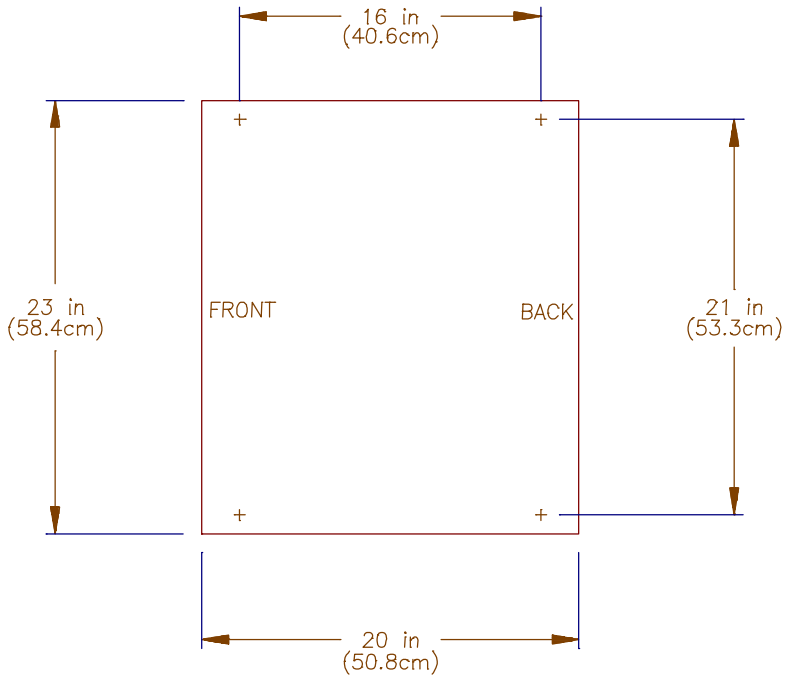

3.2.2 Mounting the Cabinet (Continued)

2. Place the cabinet on the pad where it will be installed.

> CAUTION: The EAC-2000 weighs almost 900 pounds (408 kg)! Use lifting equipment to position the unit. Lifting rings on the cabinet are provided for this purpose.

3. Bolt the cabinet to the pad.

3.2.3 Securing the Doors

Later, after all installation steps have been completed (including electrical connections and initial system operation), secure the doors as follows:

1. Close the cabinet door.

2. Secure the door with a lock to prevent unauthorized access.

3.3 Connecting the EAC-2000 to ac Power

To connect the EAC-2000 to the ac mains, make the following connections:

- Green wire to ground
- White wire to neutral
- Red and black wires to 240 Vac service

3.4 Installing the Antennas

Antennas should already have been mounted, as described in Section 2.4.2, in locations that meet the following requirements:

- Minimum signal level from any donor cell: -75 dBm or greater at the D1 antenna connector. (See Section 2.4.2 for multi-hop and multi-donor unit variations.)

- Physical separation: M1 and M2 antennas separated at least 10 feet *(3 m)* horizontally or 3 feet *(1 m)* vertically (if diversity receive is desired).

- Isolation between D1 and M1, and between D1 and M2:
  - > 75 dB

- Modem antenna: Placed so as to minimize interference with the M1, M2, and D1 antennas (minimum 60 dB isolation required). The minimum signal level required for proper operation is -105 dBm.

Antenna installation involves connecting the antennas to the EAC-2000, measuring isolation and signal level, and making needed adjustments.

3.4.1 Connecting the Antennas

Connect the antennas to the EAC-2000. All antenna connectors (type N) are located on the top rear of the cabinet, arranged as shown in Figure 3-5.

Figure 3-5. Antenna Connectors

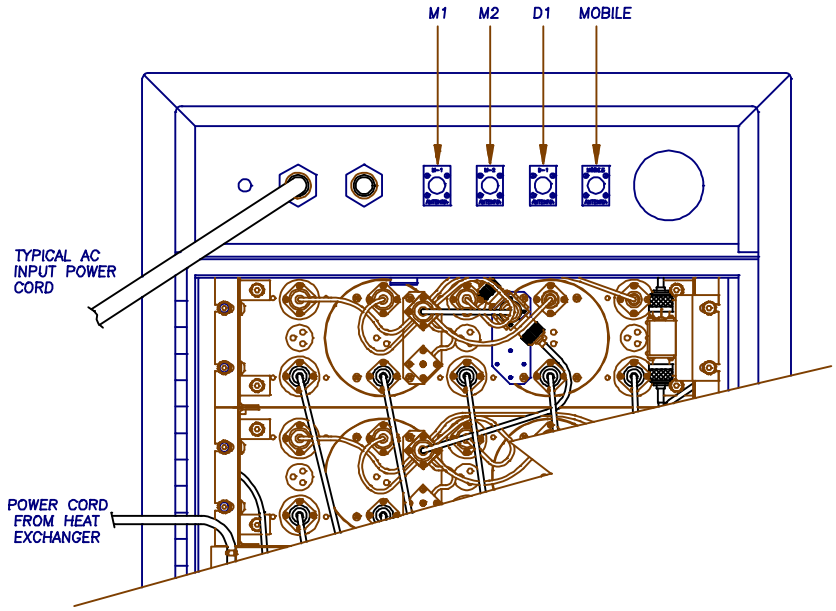

3.5 Connecting External Alarms/Controls (Optional)

The EAC-2000 includes the following inputs and outputs, which may be used to monitor or control non-EAC-2000 equipment:

- 4 digital inputs per PA cage
- 4 open collector digital outputs per PA cage
- 4 analog inputs per PA cage
- 1 +5 Vdc/100 mA source for powering external circuitry per PA cage

These inputs and outputs are located on the back of the PA cages on DB-25 female connectors. The pin designations are shown in Figure 3-6. The signals on the pins are controlled and monitored via the local or remote link. Electrical specifications for the pins are shown in Figure 3-7.

Figure 3-6. External Alarm/Control Connector Pin Out

Pin	Function	Pin	Function
1	+5 Vdc/100 mA	14	Ground
2	Ext. Digital Output 4	15	Ground
3	Ext. Digital Output 3	16	Ground
4	Ext. Digital Output 2	17	Ground
5	Ext. Digital Output 1	18	Ground
6	Ext. Digital Input 4	19	Ground
7	Ext. Digital Input 3	20	Ground
8	Ext. Digital Input 2	21	Ground
9	Ext. Digital Input 1	22	Ground
10	Ext. Analog Input 4	23	Ground
11	Ext. Analog Input 3	24	Ground
12	Ext. Analog Input 2	25	Ground
13	Ext. Analog Input 1		

3.5 Connecting External Alarms/Control (Optional) (Continued)

Figure 3-7. Electrical Specifications for Inputs and Outputs

Pins	Specifications
Digital Inputs (pins 6,7, 8, 9):	
Load:	> 100 kΩ
Low:	< 2 Vdc
High:	> 4 Vdc max. +28 Vdc
Open Collector Outputs (pins 2, 3, 4, 5):	
	Max. +15 Vdc, 20 mA Impedance 733 Ω
Analog input (pins 10, 11, 12, 13):	
Load:	1 MΩ
Range:	0–5 Vdc, 20 mV resolution
+5 Vdc source (pin 1):	+5 Vdc ±5%, 100 mA max.

The system designer should have identified any external alarms and controls to be connected. Make external alarm/control connections as follows:

1. Identify the input/output connection to be used for each external alarm/control that is to be installed. Figure 3-8 shows a typical wiring diagram for external alarm input.

2. Make connections using a compatible male connector (not supplied).

3.5 Connecting External Alarms/Control (Optional) (Continued)

Figure 3-8. Typical Wiring for External Alarm Input

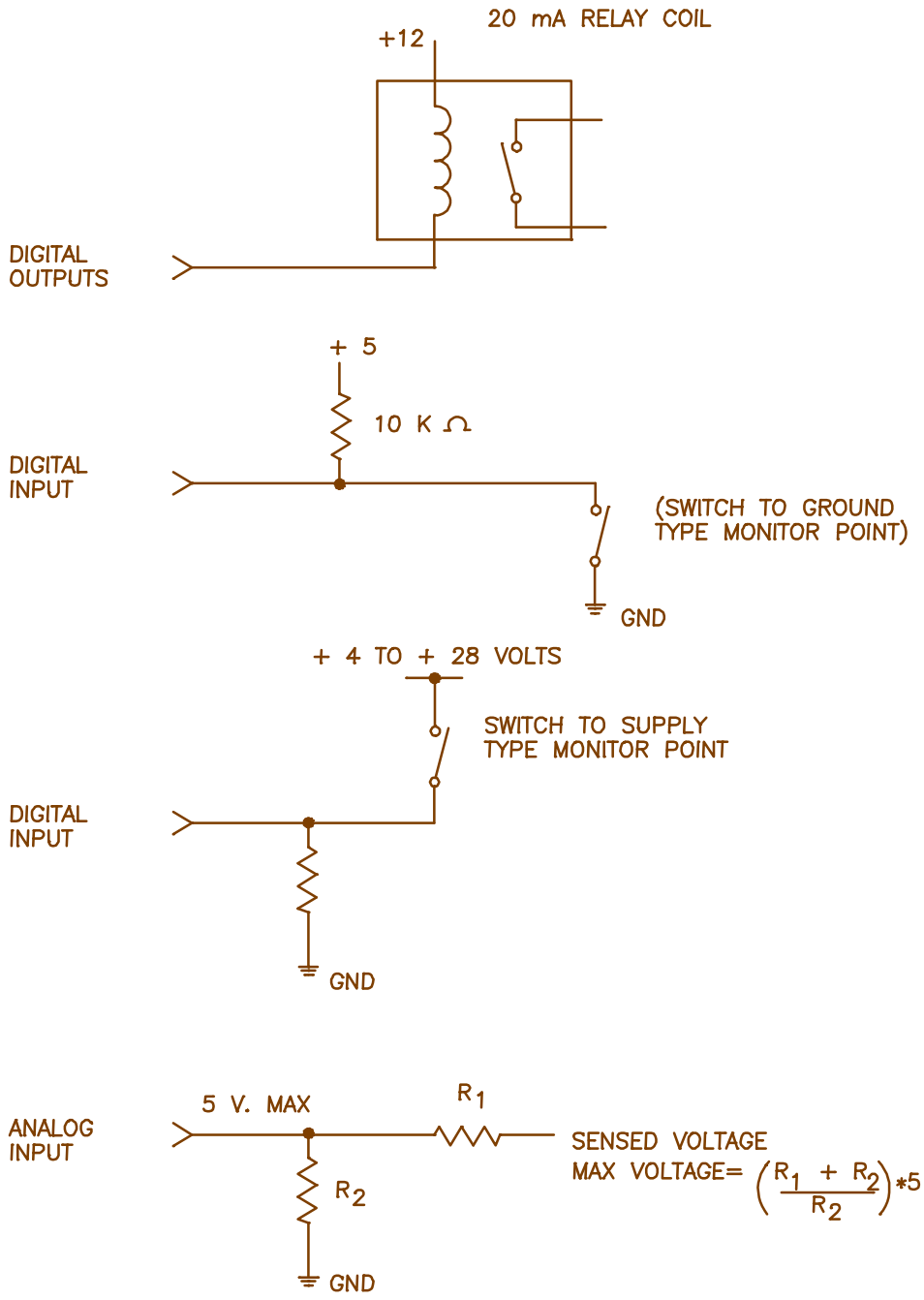

Section 4. Setting Up for Initial Operation

4.1 Introduction

Most of the EAC-2000 operating parameters are under software control and can be changed from either a local terminal or a remote terminal. You will probably have to change some of these parameters to get the system running. After programming channels, you will also need to tune the transmitter combiner and adjust power levels.

This section describes procedures for—

- Powering up and powering down the EAC-2000
- Connecting the local terminal
- Becoming familiar with system commands
- Programming initial parameters
- Tuning the transmitter combiner and setting output power

The checklist in Figure 4-1 presents a brief overview of these procedures. For more detailed descriptions of the procedures, refer to Sections 4.2–4.7. For detailed descriptions of all parameters, refer to Volume 2, Operating Procedures.

Additional instructions for special EAC-2000 configurations and options are provided in Sections 7 through 10. If you have problems during setup, refer to Appendix A, Troubleshooting Guide.

Figure 4-1. Setup Checklist

Checklist

- ☐ 1. Local terminal connected: (Sec. 4.2 and 4.4)
  - ☐ a. Terminal powered up and set to 9600 baud, even parity, 7 data bits, 1 stop bit, full duplex, all capitals, send carriage return only, auto XON/XOFF and soft scroll disabled.
  - ☐ b. EAC-2000 powered up and password entered.
- ☐ 2. System status (SSS) and alarm (ALA) report checked; no disabled and no alarms shown. (Sec. 4.6.1)
- ☐ 3. Site ID entered. (Sec. 4.6.2)
- ☐ 4. RF Channels programmed:
  - ☐ a. Donor control channel programmed. (Sec. 4.6.3)
  - ☐ b. Boosted control channel programmed. (Sec. 4.6.4)
  - ☐ c. Donor voice channels entered in voice channel lists. (Sec. 4.6.5)
  - ☐ d. Boosted voice channels programmed. (Sec. 4.6.6)
- ☐ 5. Alarms and thresholds set (if desired). (Sec. 4.6.7)
- ☐ 6. Modem mobile MIN, mobile power step, and passwords programmed. (Sec. 4.6.8)
- ☐ 7. Transmitter combiner tuned and output power set:
  - ☐ a. PAs 1–5 and 7-11 (if installed) adjusted. (Sec. 4.7.1)
  - ☐ b. PA 6 adjusted. (Sec. 4.7.2)
  - ☐ c. Reverse path power level adjusted. (Sec. 4.7.3)
- ☐ 8. Clock set. (Sec. 4.7.4)
- ☐ 9. Call history, call statistics, and alarm report reset to 0: (Sec. 4.7.4)
  - ☐ a. DCH = 0 <CR>
  - ☐ b. DCS = 0 <CR>
  - ☐ c. ALA = 0 <CR>

4.2 Powering Up the EAC-2000

Figure 4-2 lists the locations and functions of the EAC-2000 breakers. Figure 4-3 shows their locations.

Figure 4-2. EAC-2000 Breakers

Breaker	Cabinet Location	Controls
Main	ac junction box (lower left rear)	ac service to entire cabinet
ac Breaker #1	28 Vdc power supply (lower front)	ac to power supply #1
ac Breaker #2	28 Vdc power supply (lower front)	ac to power supply #2
	NOTE: Some configurations contain only one 28 Vdc power supply.	
PA dc Breakers	Back of PA cage (one per PA)	dc power to each PA

Begin with all breakers off. To power up the system, switch on the breakers in the following order:

1. Main ac breaker
2. ac breaker(s) (if both power supplies are installed, switch both on simultaneously)

☞ NOTE: The PA dc breakers are provided to prevent wiring harness damage in the event of catastrophic PA failure. These breakers cannot be turned off manually. Refer to Appendix A, Section A.15.4, before resetting a tripped PA dc breaker.

4.3 Powering Down the EAC-2000

To power down, switch off the breakers in the reverse order, as follows:

1. ac breakers
2. Main ac breaker (optional)

Figure 4-3. Breaker Locations

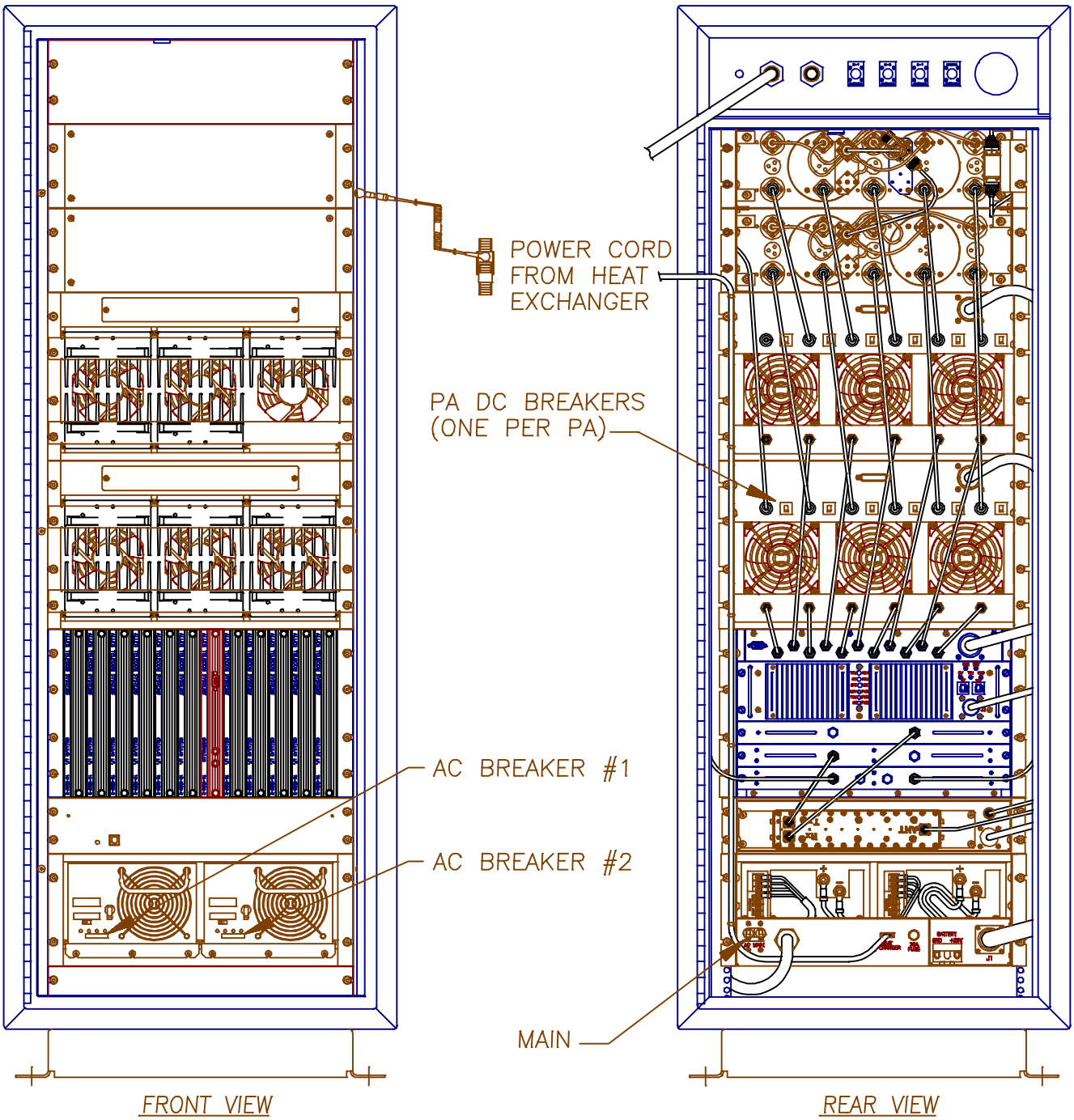

4.4 Connecting a Local Terminal

The EAC-2000 communicates with a conventional ASCII, RS232 terminal. Connect the terminal as follows.

1. Using the cable provided in the tuck pack, connect the terminal to the 25-pin D-sub connector located on the front of the controller module.

Figure 4-4. Location of Local Terminal Connector

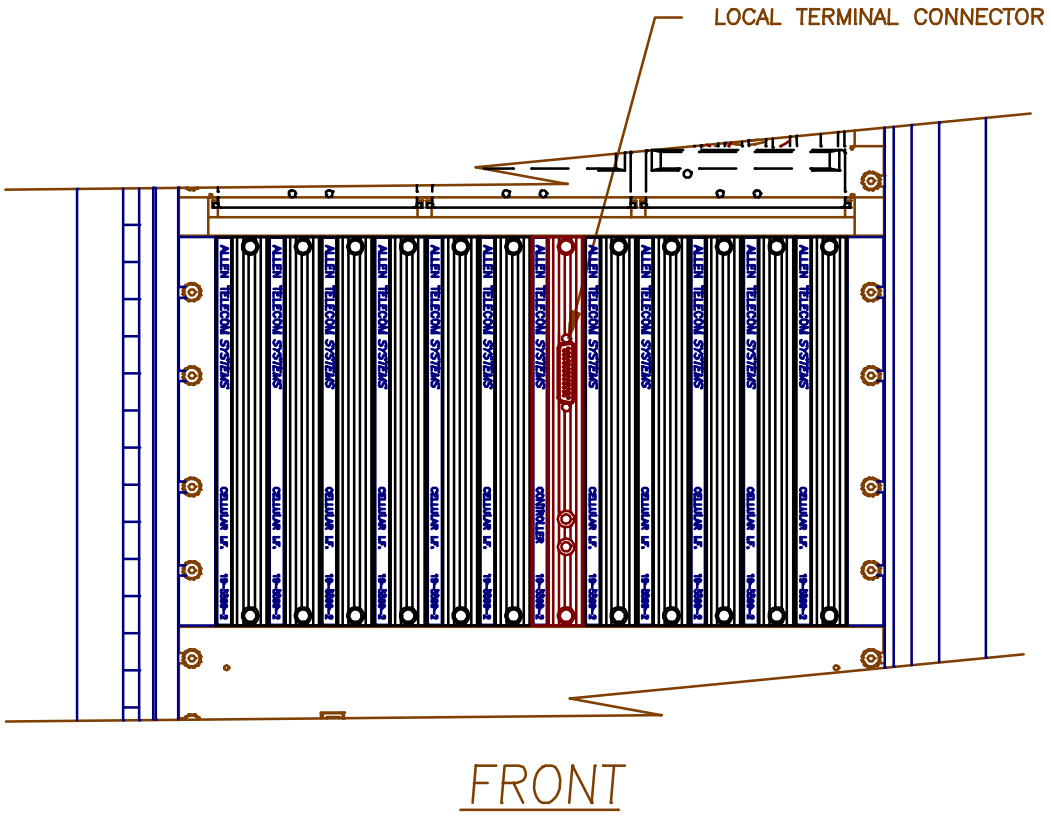

4.4 Connecting a Local Terminal (Continued)

2. Power up the terminal and set it to the following parameters:
   - 9600 baud
   - Even parity
   - 7 data bits, 1 stop bit
   - Full duplex (no local echo)

   If possible, also set the terminal to—
   - All capitals
   - Send carriage return only (no line feed)
   - Disable AUTO XON/XOFF and soft scroll

   If you are using a terminal emulation program, select TTY or VT100. Be aware that some terminal emulation programs generate extraneous characters that may interfere with communicating with the EAC-2000.

3. Power up the EAC-2000. *(After about 2 seconds, the terminal should respond CONSOLE LOCKED.*)

4. Enter <CR> (carriage return or enter, depending on the keyboard). *(The terminal should respond with a welcome message and prompt you for a password.)*

   - If something comes up but is illegible, check the terminal setup.

   - If nothing comes up, power down. Recheck the power hookup, the terminal hookup, and the terminal setup.

5. Enter the password, followed by <CR>. The default password is 1234. *(The terminal should respond with more salutation and the > prompt.)* The system is ready for you to set parameters.

4.5 Becoming Familiar with System Commands

If you are new to EAC-2000 installation, you should use this section to gain familiarity with basic rules for entering commands, as well as key commands that will be used in setting up the system. If you are already familiar with the system, turn to Section 4.6.

4.5.1 Basic Commands

Figure 4-5 lists definitions of symbols and abbreviations that are used in this section of the manual.

Figure 4-5. Command Definitions

Symbol/ Abbreviation	Definition
>	**Command entry level.** The system uses this prompt character to indicate it is ready to accept commands.
<CR>	**Carriage return** or enter.
<CTRL>	**Control.** The control key is used in combination with other keys. For example, <CTRL> Z means to hold down the control key while pressing the Z key.
ESC	**Escape.** Escape is a single key marked ESC on most keyboards.

Syntax. The system responds to commands that consist of three letters followed by up to three data fields, as follows:

COM [FIELD 1 -] [FIELD 2 =] [FIELD 3] <CR>

In this syntax—

- COM is the particular three-letter command.
- FIELD 1 consists of up to four hex characters followed by a hyphen (-).
- FIELD 2 consists of up to four hex characters followed by an equals (=) sign.
- FIELD 3 consists of up to four hex characters.
- Each command ends with a carriage return (<CR>).

4.5.1 Basic Commands (Continued)

Entering Commands. Very few commands require entry of the data fields. After the initial command has been entered, the system usually prompts for data it needs. If a command does not depend on a certain field, any data entered in that field will be ignored.

When entering commands—

- Spaces may be added to separate the fields, after the first three letters have been entered.
- Leading zeros may be omitted.
- Use DELETE or BACKSPACE to correct mistakes.
- End the command with <CR>.

Commonly Used Commands. Figure 4-6 lists the commands you are most likely to use. The most complex command is SET. This command is structured to enable you to enter parameters easily and accurately. The other commands, which are much simpler, require little or no subsequent data input. Their action is complete in a matter of seconds.

☞ To become familiar with these commands, try each command (except SET) and observe the system's response.

☞ NOTE: Use SET and RES with caution! In an operational system, SET may drop calls if certain parameters are changed. RES will drop all calls currently being boosted. Otherwise, the system commands do not interfere with call processing.

Escaping From Continuous Cycles. Some commands enter a mode in which the program does something continuously. (These commands are indicated by a dagger (†) in Figure 4-6.) To get out of this mode and return to the command entry level, hit **<ESC>** or type <CTRL> Z.

☞ NOTE: Entering <ESC> or <CTRL> Z from the command entry level (>) will cause the characters entered on the line to be erased.

Figure 4-6. System Commands

Command	Meaning	Purpose
HEL	HELp	Gives a list of the primary commands.
SET	SETup	Invokes a menu-driven entry mode used to inspect or change all EAC-2000 operating parameters. (*To exit this command, type <CTRL> X and answer N <CR>.)*
SSS	Show System Status	Gives a one-page listing of current EAC-2000 parameter settings and conditions of monitored input parameters.
SCS†	Show Call Status	Shows current status of each board. Updates listing if status changes (e.g., if a call is set up or taken down) and gives reason for change.
SSR†	Show Scanned RSSI	Shows average RSSIs of channels being scanned.
RSS†	RSSI Report	Gives a continuously updated reading of RSSIs on all RF boards.
ALA	ALArm Report	Gives a report of the number of times various alarm conditions have occurred since last system reset.
DCS	Display Call Statistics	Displays various call statistics per board (totals since last DCS=0 command).
DCH	Display Call History	Displays hourly totals of certain call statistics for the last running week.
TIM	TIMe	Displays/changes current clock time and date.
RES	RESet	Resets EAC-2000. Parameters in effect when command is issued will be preserved.
LOC	LOCk	Forces password entry before accepting subsequent commands.
PWR†	PoWeR display	Repeatedly lists power readings on all installed PAs.
SAT†	SAT report	Repeatedly lists the SAT readings on the boards.
REV	REVision	Displays hardware revisions in the EAC-2000.
MIN†	Mobile ID Number	Lists the last five access attempts by mobiles.

† To exit this command, hit ESC or type <CTRL> Z.

4.5.1 Basic Commands (Continued)

Ending a Session. A session can be ended in three ways:

- **LOC Command:** This command should be used if the session involves only system monitoring or minor parameter changes. It ensures security, but lets alarms and call statistics continue to accumulate.

- **RES Command:** This command should be used if extensive parameter changes have been made during a session. This method—
  - Ensures that all parameter changes take effect, since all hardware is initialized after a reset.
  - Ensures security because the password must be reentered to get back to the command level.
  - Initializes all alarm condition counters to 0.

- **Inactivity Timeout:** An inactivity timer is included in the program with a default inactivity timeout setting of 5 minutes. If a keyboard entry is not detected within the designated period, the system terminates any currently running command (e.g., SET) and simulates the action of LOC. This avoids leaving the EAC-2000 in an insecure state if the remote link is lost before the session is properly ended.

  ☞ NOTE: If a remote terminal is linked by modem to the EAC-2000, LOC, RES or timeout will terminate the link.

4.5.2 Using the SET Menus

Configuring the EAC-2000 to fill in a coverage area in a specific cellular system is easy, using either the local terminal or a remote terminal. From the command entry level (>), the SET command invokes the setup utility which displays a progression of menus. The menus provide a guided path to each EAC-2000 parameter. Figure 4-7 illustrates the paths to follow through the SET menus to reach each available parameter. For descriptions of all SET menus and commands, see Volume 2, Operating Procedures.

Moving Forward. Each command brings up a menu of items from which to choose, with a character in front of each item. To select an item, type the character and <CR>. The next menu (or the parameter to be changed) will be displayed.

Moving Backward. To move backward along a path, type X <CR>, or just <CR>. (Both entries correspond to the "Done with this menu" selection.) The previous menu will be displayed. Continue in this manner until you have the SET Main Menu.

Exiting. To exit SET, type <CTRL> X at any menu level. Or, type X <CR> while at the Main Menu level.

Figure 4-7. SET Command Menu Map

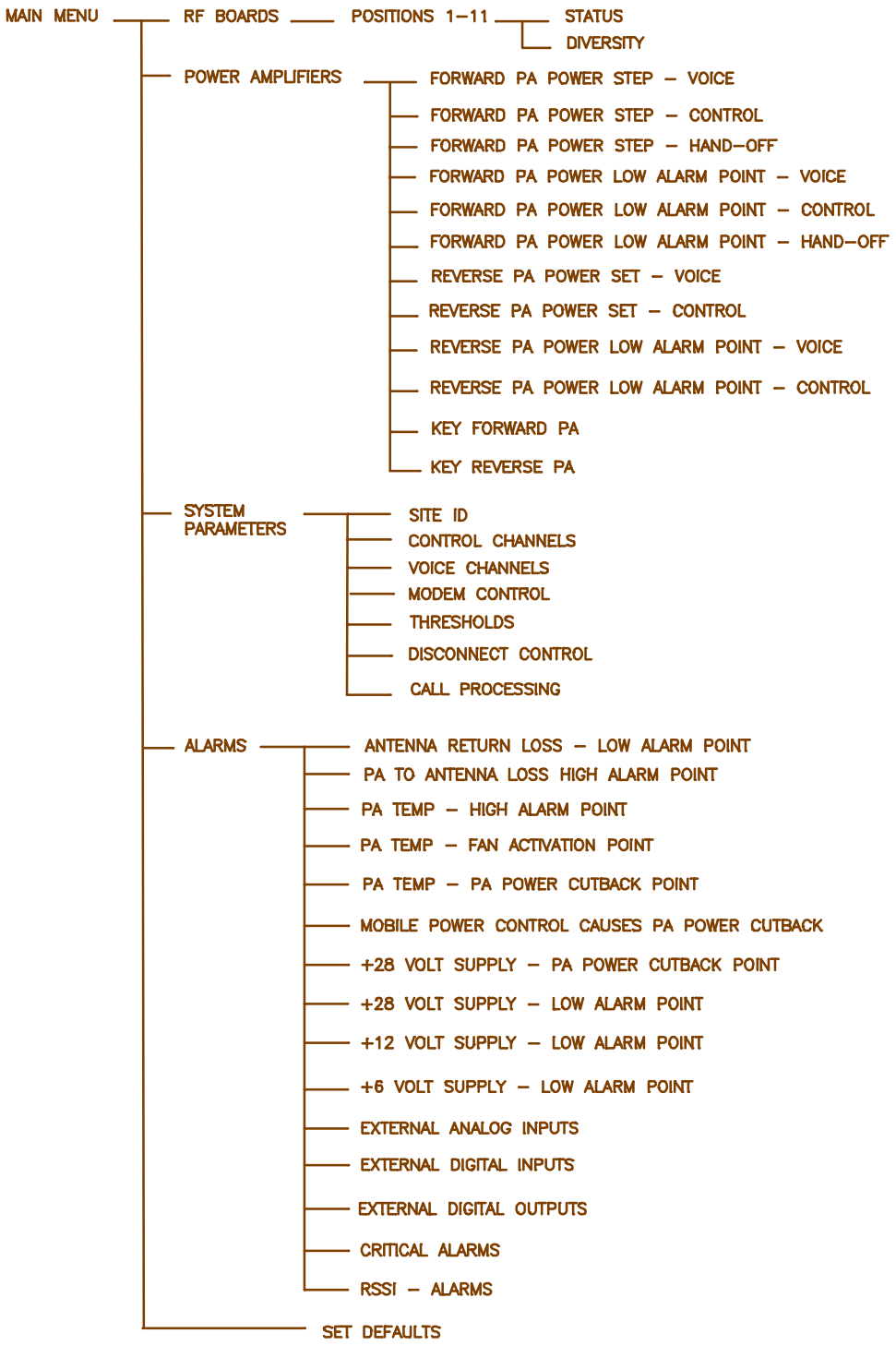

4.6 Setting Initial Parameters

Before you can operate the EAC-2000, you must check system status and program the following:

- Site identification
- Donor control channel
- Boosted control channel
- Directed retry channels
- Donor voice channels
- Boosted voice channels

You should already have the list of selected channels, as described in Section 2.4. You may also program alarms and thresholds, modem mobile MIN, mobile power step, and passwords at this time.

> If the EAC-2000 is to be used in a Multi-hop application, additional parameters must also be set. See Section 7 for procedures.

4.6.1 Checking System Status

Check the system status, as follows, to be sure parameters were returned to default status after factory testing.

1. At the > prompt, type SSS <CR>. *(A report will be displayed giving the current state of various parameters for each RF board.)*

2. At the > prompt, type ALA <CR>. *(A report will be displayed giving the number of times various alarm conditions have occurred since the last system reset.)*

   No alarms should be listed. If there are any *OUT OF SERVICE* or memory alarms, refer to Appendix A, Troubleshooting Guide.

4.6.2 Entering the Site ID

1. At the > prompt, type SET <CR> to display the SET Main Menu.

```
Main Menu          A  RF Boards
                   B  Power Amplifiers
                   C  System Parameters
                   D  Alarms
                   E  Set Defaults
```

2. Type C <CR> to display the System Parameters Menu.

```
System Parameters Menu

A  Site ID . . . . . . . .  Identification     Multi-Hop
B  Control Channels  . .    Donor              Boosted            State
C  Voice Channels . . . .   Donor              Donor SAT          Boosted
D  Modem Control . . . .    Passwords          Console Time-out   Auto-Dial Control
                            Dial-up Phone      Modem Mobile
E  Thresholds . . . . . .   Hand-In            Hand-Back          Multi-Donor
                            Mobile Power       RSSI Averaging     Hand-In Delay
F  Disconnect Control  .    Donor RSSI         SAT Fade Time-out
                            Hand-Back Delay    Hand-Back Attempts
G  Call Processing . . . .  RSSI > Thresh      Hand-Back / Grab-Back
```

3. Type A <CR> to display the Site ID Menu (shown below with default values).

```
Site ID Menu
                                                  Default Values
A     Site Identification . . . . . . . . . . . . . . . . . . . Not Assigned
B     Multi-Hop Feature . . . . . . . . . . . . . . . . . . . . . DISABLED
```

4. Type A <CR> to access the Site Identification parameter.

5. Enter a name (up to 20 characters) that uniquely identifies the site.

6. Type X <CR> to back out of the Site ID Menu.

4.6.3 Setting the Donor Control Channel

1. From the System Parameters Menu, type B <CR> to display the Control Channels Menu.

Control Channels Menu

A	Donor Control Channel	335
B	Boosted Control Channel	340
C	RF Board To Use For Control Channel	1
D	Control Channel State During "All Channels Busy"	DIRECTED RETRY
E	Directed Retry Channels	LIST
F	Back-up Control Channel Option	DISABLED
G	Revertive Control Channel Option	DISABLED
H	Substitute Control Channel	DISABLED
I	Booster Link Channel	550
J	Booster Link Channel - Previous EAC	571

☞ NOTE: This menu represents all selections available on the Control Channels Menu. Not all selections appear at all times. Following are selections that are only available when used in conjunction with other parameters:

- E - Directed Retry Channels: Appears only if selection D (Control Channel State During "All Channels Busy") is set to *Directed Retry*.

- H - Substitute Control Channel: Appears only if the Back-up Control Channel Option (selection F) or the Revertive Control Channel Option (selection G) is set to *enabled*. When selection H is *disabled* and selection G is *enabled*, board 1 will be used for the last call, but no control channel will come up when board 1 is boosting a call.

- I - Booster Link Channel: Appears only if the Multi-Donor Activation Threshold (selection C on Thresholds and Power Control Menu) is *enabled*.

- J - Booster Link Channel - Previous EAC: Appears only if the Multi-hop Feature is *enabled* and set to mode 3 or 4.

4.6.3 Setting the Donor Control Channel (Continued)

4. Type A <CR> to access the Donor Control Channel parameter.

5. Enter the channel number (see Section 2.4), then <CR>.

6. To return to the Control Channels Menu, type X <CR>.

4.6.4 Setting the Boosted Control Channel

1. From the Control Channels Menu, type B <CR> to access the Boosted Control Channel parameter. This parameter establishes the boosted control channel, to which combiner port 1 is tuned.

2. Enter the channel number (see Section 2.4), then <CR>.

4.6.5 Setting the Directed Retry Channels

1. From the Control Channels Menu, type E <CR> to access the Directed Retry Channels parameter.

2. Enter the control channel numbers of all nearby cells, including the donor. The mobile will be directed to attempt calls on these channels when the EAC-2000 is busy.

3. To return to the System Parameters Menu, type X <CR> twice.

4.6.6 Setting the Donor Voice Channels

1. From the System Parameters Menu, type C <CR> to display the Voice Channels Menu.

```
Voice Channels Menu
                                                  Default Values
A    Donor Voice Channels (5970 Hz SAT) . . . . . . . . . .  List
B    Donor Voice Channels (6000 Hz SAT) . . . . . . . . . .  List
C    Donor Voice Channels (6030 Hz SAT) . . . . . . . . . .  List
M    Donor Voice Channels (Multiple SAT) . . . . . . . . . . . . . . List

2    Boosted Voice Channel Position 2 . . . . . . . . . . . . . . . . . 361
3    Boosted Voice Channel Position 3 . . . . . . . . . . . . . . . . . 382
4    Boosted Voice Channel Position 4 . . . . . . . . . . . . . . . . . 403
5    Boosted Voice Channel Position 5 . . . . . . . . . . . . . . . . . 424
7    Boosted Voice Channel Position 7 . . . . . . . . . . . . . . . . . 445
8    Boosted Voice Channel Position 8 . . . . . . . . . . . . . . . . . 466
9    Boosted Voice Channel Position 9 . . . . . . . . . . . . . . . . . 487
10   Boosted Voice Channel Position 10 . . . . . . . . . . . . . . . . 508
11   Boosted Voice Channel Position 11 . . . . . . . . . . . . . . . . 529
```

2. Notice the SATs for the first three donor voice channel lists. Determine which list(s) to use for the donor voice channels you identified earlier (see Section 2.4).

> M, Donor Voice Channels (Multiple SAT), is for use in some Multi-hop configurations. Enter channels into this list only if the EAC-2000 is part of a Multi-hop configuration (as described in Section 10).

3. Type A, B, or C, followed by <CR>, to access the Donor Voice Channels Menu for the corresponding SAT.

4.6.6 Setting the Donor Voice Channels (Continued)

4. Enter channels in the list, as described below. A given channel may be entered in only one list. The system will support a maximum of 105 total channels in all four lists (A, B, C, and M).

   a. **To add a channel**, type A [channel number] <CR>.

   b. **To add multiple channels**, after the A enter multiple channel numbers separated by commas or spaces. If you enter a plus (+) sign before a single channel entry, 15 channels will be added, spaced 21 channels apart, starting with the channel entered. You can then delete extra channels as necessary.

   c. **To remove a channel from the list**, type R [channel number] <CR>.

   d. **To remove multiple channels**, after the R enter multiple channel numbers separated by commas or spaces. To remove the entire list, type ALL.

5. To return to the Voice Channels Menu, type X <CR>.

4.6.7 Setting the Boosted Voice Channels

The Voice Channels menu gives you access to boosted voice channels 2–11, to which combiner ports 2–11, respectively, are tuned. Boosted channel 1 is normally used to boost the control channel and does not need to be set. Program channels 2–11 (excluding 6), as follows.

1. Type the combiner port number (2 to 11), followed by <CR> to access the desired corresponding Boosted Voice Channel parameter.

2. Enter the channel number, followed by <CR>.

3. To return to the Voice Channels Menu, type X <CR>.

4. Repeat steps 1–3 for each boosted voice channel.

4.6.8 Programming Alarms and Thresholds

1. From the SET Main Menu, type D <CR> to display the Alarms Menu (shown below with default values).

Alarms Menu

		Default Values
A	M1 Antenna return loss - Low Alarm Point	6 dB
B	M2 Antenna return loss - Low Alarm Point	9 dB
C	PA Temp - High Alarm Point	90 Deg C
D	PA Temp - Fan Activation Point	60 Deg C
E	PA Temp - PA Power Cutback Point	90 Deg C
F	Mobile Power Control causes PA Power Cutback	DISABLED
G	+28 Volt Supply - PA Power Cutback Point	23.0 Volts
H	+28 Volt Supply - Low Alarm Point	23.0 Volts
I	+12 Volt Supply - Low Alarm Point	10.0 Volts
J	+6 Volt Supply - Low Alarm Point	5.4 Volts
K	External Analog Inputs	Alarm Points
L	External Digital Inputs	Alarm States
M	External Digital Outputs	States
N	Critical Alarms	ALARMS REPORTED
O	RSSI - Alarms	ALARM POINTS

4.6.8 Programming Alarms and Thresholds (Continued)

2. Type D <CR> to set the fan activation point (the internal temperature that causes the cabinet heat exchanger to be turned on).

   The 60ºC default setting is adequate for most installations. Lower the threshold to 50ºC if the control channel transmitter output is increased to its maximum (45W) output level.

3. Type H <CR> to access the +28 Volt Supply - Low Alarm Point parameter.

   Loss of ac power will cause the EAC-2000 to run on power from the battery plant (if installed). The battery voltage will drop to the low alarm point after a period of time, causing an alarm.

   The default value (23.0 V) will be adequate for most installations. If an external battery plant is used, the low alarm point may be adjusted upward (e.g., to 25–26 V) if desired to provide an immediate alarm in the event of the loss of ac power.

4.6.8 Programming Alarms and Thresholds (Continued)

4. If external analog inputs are connected to the EAC-2000 external alarm/controls ports, type K <CR> to access the External Analog Inputs menu.

```
External Analog Inputs Menu

PA 1–6 Cage:
1     Ext. Analog Input 1 Alarm State DISABLED;  Input Currently 0.0 Volts
2     Ext. Analog Input 2 Alarm State DISABLED;  Input Currently 0.0 Volts
3     Ext. Analog Input 3 Alarm State DISABLED;  Input Currently 0.0 Volts
4     Ext. Analog Input 4 Alarm State DISABLED;  Input Currently 0.0 Volts

PA 7–11 Cage:
5     Ext. Analog Input 1 Alarm State DISABLED;  Input Currently 0.0 Volts
6     Ext. Analog Input 2 Alarm State DISABLED;  Input Currently 0.0 Volts
7     Ext. Analog Input 3 Alarm State DISABLED;  Input Currently 0.0 Volts
8     Ext. Analog Input 4 Alarm State DISABLED;  Input Currently 0.0 Volts
```

Choose the number of the input(s) connected and program the alarm point. You may specify DISABLED or ABOVE/BELOW a threshold, which may be between 0 and 5 Volts.

☞ NOTE: If PA 7–11 Cage is not included in the unit, then the hardware for those inputs is not installed and the alarms should be left as DISABLED.

4.6.8 Programming Alarms and Thresholds (Continued)

5. If external digital inputs are connected to the EAC-2000 external alarm/controls ports, type L <CR> to access the External Digital Inputs menu.

```
External Digital Inputs Menu

PA 1–6 Cage:
1     Ext. Digital Input 1 Alarm State   DISABLED;  Input Currently Low
2     Ext. Digital Input 2 Alarm State   DISABLED;  Input Currently Low
3     Ext. Digital Input 3 Alarm State   DISABLED;  Input Currently Low
4     Ext. Digital Input 4 Alarm State   DISABLED;  Input Currently Low

PA 7–11 Cage:
5     Ext. Digital Input 1 Alarm State   DISABLED;  Input Currently Low
6     Ext. Digital Input 2 Alarm State   DISABLED;  Input Currently Low
7     Ext. Digital Input 3 Alarm State   DISABLED;  Input Currently Low
8     Ext. Digital Input 4 Alarm State   DISABLED;  Input Currently Low
```

Choose the number of the input(s) connected and program the alarm state. You may specify DISABLED, HIGH or LOW.

6. If external digital outputs are connected to the EAC-2000 external alarm/controls ports, type M <CR> to access the External Digital Outputs menu.

```
External Digital Outputs Menu

PA 1–6 Cage:
1     Ext. Digital Output 1 State . . . . . . . . . . . . . . . . . . . . LOW
2     Ext. Digital Output 2 State . . . . . . . . . . . . . . . . . . . . LOW
3     Ext. Digital Output 3 State . . . . . . . . . . . . . . . . . . . . LOW
4     Ext. Digital Output 4 State . . . . . . . . . . . . . . . . . . . . LOW

PA 7–11 Cage:
5     Ext. Digital Output 1 State . . . . . . . . . . . . . . . . . . . . LOW
6     Ext. Digital Output 2 State . . . . . . . . . . . . . . . . . . . . LOW
7     Ext. Digital Output 3 State . . . . . . . . . . . . . . . . . . . . LOW
8     Ext. Digital Output 4 State . . . . . . . . . . . . . . . . . . . . LOW
```

4.6.8 Programming Alarms and Thresholds (Continued)

Choose the number of the output(s) connected and program the desired state. You may specify:

- Low
- Low if critical alarm exists
- High
- High if critical alarm exists

The "low/high if critical alarm exists" options are provided to allow for connection to external alarm signaling equipment.

7. Type N <CR> to review the Critical Alarms Menu, shown here with default values.

Critical Alarms Menu

		Default Values
A	Board Out-of-Service Alarm	CRITICAL
B	Board ROM Alarm	CRITICAL
C	Board Calibration Memory Alarm	CRITICAL
D	Serial Data Link Alarm	CRITICAL
E	Personality Mismatch Alarm	CRITICAL
F	Synthesizer Unlocked Alarm	CRITICAL
G	RVS PA Pwr Low Alarm	CRITICAL
H	RSSI Alarm	LOG ONLY
I	PA Out-of-Service Alarm	CRITICAL
J	PA Temp - High Alarm	LOG ONLY
K	PA Power - Low Alarm	CRITICAL
L	PA to Antenna Loss High Alarm	CRITICAL
M	Antenna Ret Loss Alarm	CRITICAL
N	ROM Alarm	CRITICAL
O	RAM Alarm	CRITICAL
P	NOVRAM Alarm	CRITICAL
Q	SAT Detector Alarm	CRITICAL
R	Power Supply Voltages - Low Alarm	CRITICAL
S	External Analog Input Alarm	LOG ONLY
T	External Digital Input - Alarms	LOG ONLY
Z	Display More Critical Alarms	

☞ NOTE: This illustration represents the complete Critical Alarms Menu. In actual application, only half of the Critical Alarms Menu can be viewed at a time due to minimal screen space. To access additional Critical Alarms Menu selections, type Z <CR>.

4.6.8 Programming Alarms and Thresholds (Continued)

Critical alarms will cause the EAC-2000 to automatically dial an alarm telephone number when the Auto-Dial feature is enabled. **Log only alarms** will be counted and displayed in the ALA screen, but will not cause the EAC-2000 to dial its programmed alarm number.

The default values shown above will be adequate for most installations.

- To change an alarm, type the letter of that alarm and **<CR>**.
- To alternate between the two Critical Alarms Menu displays, type **Z <CR>**.

8. Type **O <CR>** at the Alarms Menu to review the RSSI Alarms Menu.

```
RSSI Alarm Points Menu
                                                    Default Values
A     Donor Control Channel RSSI - High Alarm Point  . . .  NONE
B     Donor Control Channel RSSI - Low Alarm Point  . .  -80 dBm
C     Donor Voice Channel RSSI - High Alarm Point  . . . .  NONE
```

B Donor Control Channel RSSI - Low Alarm Point is the most critical of these alarm thresholds. This threshold should be set lower (within a range of -85 to -95 dBm), to ensure continued operation, under the following circumstances:

- If the booster is being operated at a minimum (-75 dBm) donor signal level and some fading exists on the donor-to-booster path.

A and C, Donor Control/Voice Channel RSSI - High Alarm Points, may be set at a level 10–15 dB higher than the normal signal levels being received from the donor, if desired. This will allow the EAC-2000 to log alarms in the event of IF board failures with their RSSI measuring circuits.

4.6.9 Programming the Modem Mobile MIN, Mobile Power Step, and Passwords

The assigned mobile identification number (MIN) of the mobile and the desired mobile power step should be loaded into the booster. This allows the booster to trap calls to and from the remote link to force operation on the donor voice channels. By doing so, the remote link does not tie up one of the boosted voice channels. Passwords may also be programmed now.

1. From the System Parameters Menu, type D to display the Modem Control Menu, shown here with default values.

Modem Control Menu

		Default Values
A	Master Password	1234
B	Restricted Password	5678
C	Console Time-out	30 (x 10 Sec)
D	Auto-dial Enable	DISARMED
E	Dial-up Phone Number 1	12163498684
F	Dial-up Phone Number 2	NONE
G	Auto-dial Trials Max	10
H	Delay Between Auto-dial Retries	6 (x 10 sec)
I	Max Auto-dial Trial Period	9 (x 10 sec)
J	Modem Setup	PARAMETERS
K	Modem Mobile MIN	1234567890
L	Modem Mobile Power Step	7

2. Type K <CR> to access the Modem Mobile MIN parameter.

3. Enter the 10-digit MIN, followed by <CR>.

4. Type L <CR> to access the Modem Mobile Power Step.

5. Enter the desired power level step (7 = minimum, 0 = maximum). Enter <CR> to record the desired power step.

WARNING!! Use the minimum power step allowable to minimize the possibility of overloading the EAC-2000's reverse input pre-amplifier.

6. If desired, use menu entries A and B to enter the passwords. (They may be left at the defaults for now if desired.)

4.7 Tuning Transmitter Combiner and Setting Output Power

The transmitter combiner must be tuned, and output power levels set, whenever boosted control and voice channels are entered or changed. This process involves tuning the combiner cavities of PAs 1–5 and 7-11 (if installed) and adjusting their power output levels, and adjusting the power output level for PA 6.

4.7.1 Adjusting Combiners and Power Levels for PAs 1–5 and 7-11

1. With the system power OFF, connect power measuring equipment to the M1 antenna port (see Figure 3-5). Remove the cover plates from the forward combiner(s) to reveal the combiner tuning screws. Then turn the power back on. Output power may be monitored using a through-line wattmeter (or a wattmeter with a built-in load) to monitor output power.

2. From the SET Main Menu, type B <CR> to display the Power Amplifiers Menu.

```
Power Amplifiers Menu
                                                    Default Values
A    Forward PA Power Step - Voice . . . . . . . . . . . . . . . . . . . . 0
B    Forward PA Power Step - Control . . . . . . . . . . . . . . . . . . . 0
C    Forward PA Power Step - Hand-off . . . . . . . . . . . . . . . . . . 0
D    Forward PA Power Low Alarm Point - Voice . . . . . +40 dBm
E    Forward PA Power Low Alarm Point - Control . . . . +40 dBm
F    Forward PA Power Low Alarm Point - Hand-off . . . +40 dBm
G    Reverse PA Power Set - Voice . . . . . . . . . . . . . . . . +20 dBm
H    Reverse PA Power Set - Control . . . . . . . . . . . . . . . +20 dBm
I    Reverse PA Power Low Alarm Point - Voice . . . . . +15 dBm
J    Reverse PA Power Low Alarm Point - Control . . . . +15 dBm
K    Key Forward PA . . . . . POWER ADJ/COMBINER TUNING
L    Key Reverse PA . . . . . . . . . . . . POWER MEASUREMENT
```

3. Type K <CR> to key a forward PA.

4. Type 1 <CR> to key PA 1 and display the forward power output as measured at the sensor.

4.7.1 Adjusting Combiners and Power Levels for PAs 1–5 and 7–11 (Continued)

5. Refer to the illustration affixed to the inside of the front door of the EAC-2000 cabinet to determine which combiner cavities coordinate with which PAs. Loosen the lock nut and adjust combiner cavity 1 using a screwdriver.

   - If using a wattmeter, adjust for **maximum power output** as indicated by the wattmeter.

   - Retighten the lock nut.

   NOTE: The power reading displayed on the terminal will not vary as the combiner is tuned.

Figure 4-8. Combiner Cavity

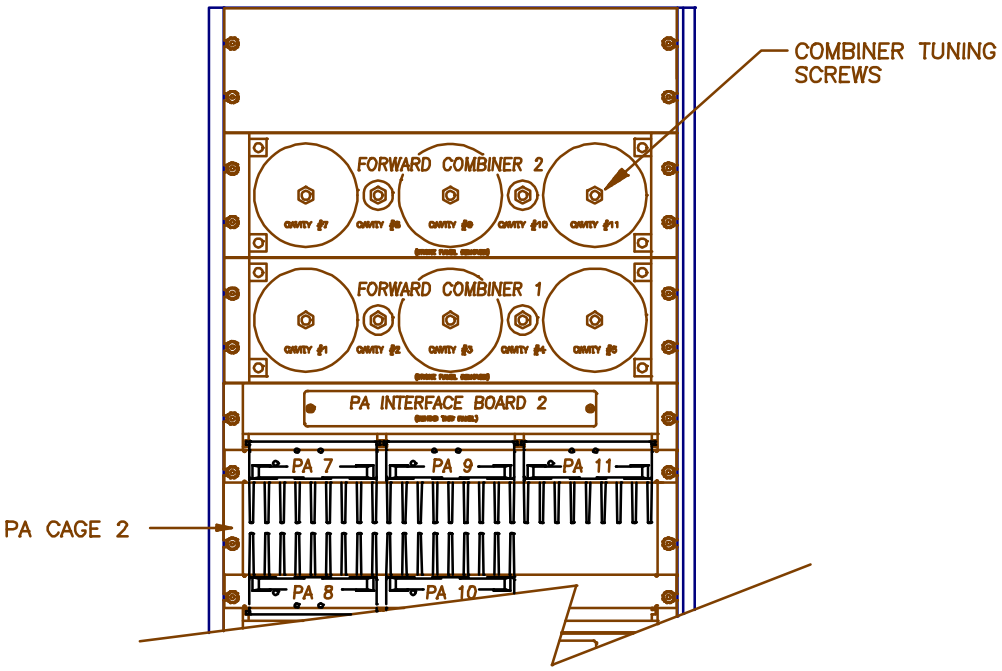

4.7.1 Adjusting Combiners and Power Levels for PAs 1–5 and 7–11 (Continued)

6. Adjust the power output for PA 1 using a small screwdriver or adjustment tool to turn the PA power potentiometer on the front of the PA (Figure 4-9). Use a wattmeter, if available, to measure the power output. Adjust to the level necessary to meet the authorized ERP level from the antenna.

☞ NOTE: The control channel output power level is set at the factory for 10 watts at the M1 antenna connector.

☞ NOTE: The power level displayed on the terminal is 4 dB higher than the power level at the antenna port because of cable and combiner losses. The displayed power ranges from +38 to +47 dBm (7–45 watts), which corresponds to a range at the M1 antenna connector of +34 to +43 dBm (3–20 watts). If the displayed power level is used instead of a wattmeter, take these differences into consideration.

Figure 4-9. Location of PA Power Potentiometer

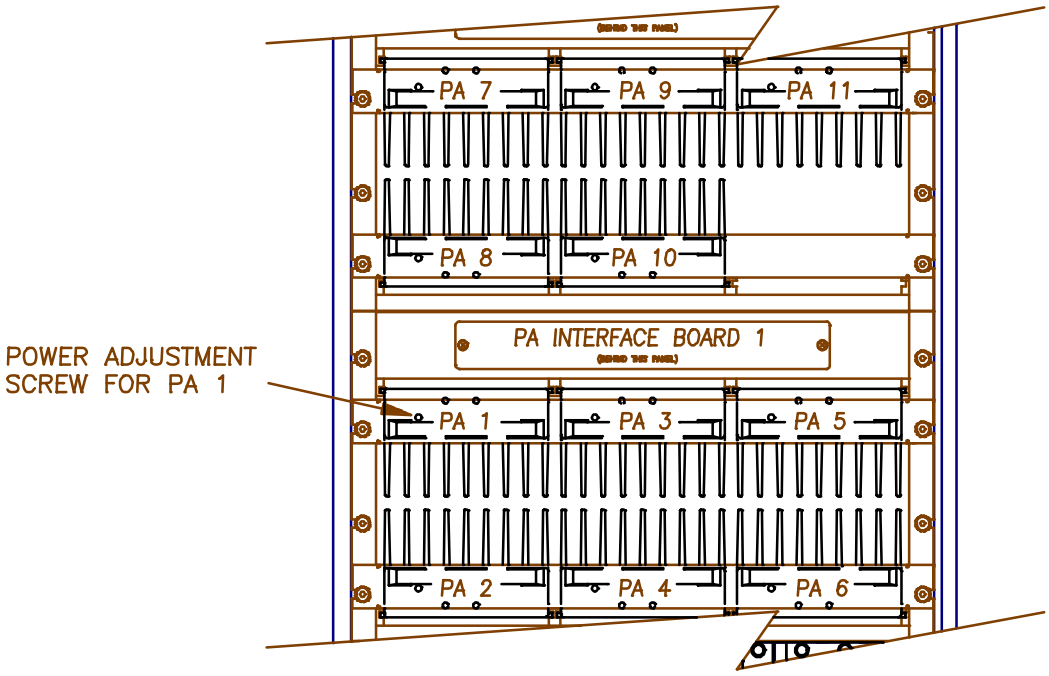

4.7.1 Adjusting Combiners and Power Levels for PAs 1–5 and 7–11 (Continued)

7. Note that the PA power potentiometer has a 7–10 dB turn down range. If the power out cannot be adjusted low enough, hit ESC to return to the Power Amplifiers Menu.

   Select B, Forward PA Power Step - Control. This allows entry of a setting between 0 and 3. Increasing the step by 1 causes the maximum power out to be reduced by 4 dB (2→8 dB, 3→12 dB). Adjust this parameter in conjunction with the potentiometer to achieve the desired output power.

8. Repeat steps 3 (selecting a new PA each time) through 7 to adjust PAs 2-5 and 7-11 (if installed).

   If low power out is desired, use selection A, Forward PA Power Step - Voice, for PAs 2–5 and 7–11.

9. When all PAs have been adjusted, make a second pass through the PAs to check tuning and power levels, and make further adjustments as needed. This step is needed because one of the cavities might have been close to the point to which a second cavity was being tuned. This would cause erroneous power readings and adjustment during the initial pass.

4.7.2 Adjusting the PA 6 Power Level

PA 6 output power does not pass through the combiner. (For a description of PA 6 function, see Section 2 of Volume 3, Technical Information.) To adjust its power level—

1. Turn the power off, move the power measuring equipment to the M2 antenna port, and turn the power back on.

4.7.2 Adjusting the PA 6 Power Level (Continued)

2. Key PA 6 and adjust the PA 6 power level as described above. The power level should be equal to the power level of the voice channel. Hit ESC to unkey the PA.

   If low power out of PA 6 is desired, use selection C, Forward PA Power Step - Hand-off, to reduce the maximum power out.

3. Remove the power measuring equipment. Type <CTRL> X to back out of the SET menu completely. Hit <CR> at the question prompt (defaults NO).

4.7.3 Setting Reverse Path Output Power (If Necessary)

The output power in the reverse direction (from booster to donor cell) is +20 dBm per channel. It is set at a much lower level than in the forward direction to prevent reuse interference with other cells that may be in the system. If the minimum received signal requirements are met for the forward direction, then by reciprocity +20 dBm per channel in the reverse direction is sufficient.

☞ NOTE: Adjustment of the reverse power level is seldom needed. However, in certain installations the output level may need to be reduced.

For example, in an installation with a very good path between the donor cell and the booster, the +20 dBm output level may be so high that the signal received at the cell site is above the cell site's dynamic power control cutback threshold.

In this situation, mobiles handled through the EAC-2000 will be powered back by the serving cell site. Because the EAC-2000 reverse path attempts to level its output power at +20 dBm no matter what the received signal strength is, mobiles in this situation will ultimately be powered back to the minimum (VMAC=7) power level, and calls will drop.

4.7.3 Setting Reverse Path Output Power (If Necessary) (Continued)

The +20 dBm output level can be reduced with the following procedure:

1. From the SET Main Menu, type B <CR> to display the Power Amplifiers Menu.

2. Use selections I and J , the reverse PA power for voice and control channels.

3. Enter the desired level from +5 to +20 dBm.

Another way to remedy this situation is to install pads in increments of 10 dB between the donor antenna and the donor duplexer ANT connector. This method has the added advantage of increasing effective antenna isolation.

4.7.4 Setting PA Power Low Alarm Points

Note that the Power Amplifiers Menu also includes the low power alarm points. The default values are appropriate for PAs set to the factory power levels (+46.5 dBm forward, +20 dBm reverse).

If the power outs have been adjusted lower than this, reduce the alarm points as well. Normally, the alarm point should be set 5 dB lower than the power reported on the terminal while keyed.

4.7.5 Setting Time and Report Values

The EAC-2000 keeps various statistics of calls handled by the booster and alarms that have been logged:

- Running totals of the number and duration of calls handled per board can be displayed using the DCS command.
- Incremental totals of certain call statistics can be displayed using the DCH command.
- Alarms logged since the last system reset can be displayed using the ALA command.

The EAC-2000 clock is used in updating these statistics. To set the clock and reset the report values to 0, complete the following steps:

1. At the > prompt, type TIM to access the clock. Enter the current date and time.
2. Type DCH=0 to reset the Display Call History parameter.
3. Type DCS=0 to reset the Display Call Statistics parameter.
4. Type ALA=0 to reset the Alarm Report parameter.

Section 5. Installing the Remote Link

5.1 Introduction

The AMPS EAC-2000 come equipped with—

- Microcomm TravelPorte MNP-10 modem
- Motorola cellular radio

The modem is compatible with many international modem standards including:

- Bell 103 (300 BPS)
- Bell 212A (1200 BPS)
- CCITT V.21 (300 BPS)
- CCITT V.22 (1200 BPS)
- CCITT V.22 BIS (2400 BPS)
- CCITT V.32 (4800 and 9600 BPS)
- CCITT V.42 (error correction)
- CCITT V.42 BIS (data compression)
- MNP Class 5 (data compression)

The mobile in the EAC-2000 may be dialed using a remote terminal and compatible modem. In most cases, the Microcomm modem in the EAC-2000 automatically negotiates with the originating modem to determine the highest speed that the link (and modems) will support. Error correction and data compression capabilities of the modems are also automatically negotiated, and if both modems support common protocols, the session will utilize them.

Once the remote link is established, the interface with the system is exactly like that on the local link, but at a different baud rate. If both links are up, characters typed on either terminal are echoed to both, along with the resulting EAC-2000 output. This makes it possible for an experienced operator to exercise the system remotely while someone watches locally, or for the two to exercise the system together.

Procedures. Establishing the remote link involves—

- Setting up service to the mobile radio
- Programming the mobile radio
- Checking out the mobile radio
- Testing the remote link

5.1 Introduction (Continued)

The checklist in Figure 5-1 presents a brief overview of these procedures. For more detailed descriptions of the procedures, refer to Sections 5.2–5.5.

Figure 5-1. Remote Link Installation Checklist

Checklist

- ☐ 1. Service set up with local supplier. (Sec. 5.2)
- ☐ 2. Mobile radio programmed: (Sec. 5.3)
- ☐ 3. Mobile checked out for proper operation: (Sec. 5.4)
  - ☐ a. Powering up.
  - ☐ b. Call originating.
  - ☐ c. Answering.
- ☐ 4. Remote link tested:
  - ☐ a. EAC-2000 Answering tested. (Sec. 5.5.1)
  - ☐ b. EAC-2000 Originating tested. (Sec. 5.5.2)

5.2 Setting Up Service

1. Set up service to the mobile by contacting the local cellular service supplier. Provide them with the mobile serial number.

2. Obtain from the service supplier the values for the parameters that will be programmed into the mobile.

3. Be sure the MIN of the cellular mobile has been loaded into the booster (see Section 4.6.9).

5.3 Programming the Mobile Radio

The radio is programmed using the supplied handset, which plugs into the front of the mobile shelf. To program the radio, consult the provided manual or contact the Extend-A-Cell Hotline.

☞ NOTE: The sequence to cause the Motorola radio to enter the programming mode is FCN0000000000000RCL (total of 13 zeros).

Once programming and initial testing is complete, the handset should be removed and stored in the cabinet.

5.4 Checking Out the Mobile

After the mobile has been set up and programmed, check it for proper operation by completing the following steps.

1. With the handset connected, power up the EAC-2000. After a short while, the "no sequence" indication should disappear.

   - If the mobile does not come into service, check the antenna, the antenna connection and the mobile programming.

2. Make sure the mobile can originate and answer calls in the conventional fashion. The mobile with the handset can be used to communicate with a partner while trying to optimize the booster performance.

3. Dial the mobile using another cellular phone. The mobile should ring a few times, then answer, then send about several seconds of answer-back tone (1800 Hz).

5.5 Testing the Remote Link

After the remote link has been installed and programmed, you should test its operation. The EAC-2000 should be able to answer calls placed from the remote link. It should also be able (if so programmed) to place calls to a predetermined number when certain alarm conditions exist.

5.5.1 EAC-2000 Answering

The EAC-2000 constantly monitors and answers incoming calls even if it is being exercised via the local link. To test the booster's ability to answer calls from the remote link, complete the following steps.

1. Ensure that the remote link has been installed as required:

   - Conventional ASCII terminal

   - Modem: Microcomm TravelPorte MNP-10 compatible modem

   - Terminal and modem set to—
     - Appropriate baud rate for the modem
     - 7 data bits, even parity, 1 stop bit
     - Full duplex (no local echo)

2. Dial the phone number of the mobile in the EAC-2000. *(After about one ring, the EAC-2000 will answer and try to set up communication.)*

   - If the modems fail to connect, the modems will terminate the call after a set period of time.

   - If the modems are successful in establishing a link, the remote modem will indicate *CONNECT*.

3. Type <CR>. *(The familiar EAC-2000 response should appear.)*
   If there are illegible characters, check the modem/terminal parameter setup.

5.5.2 EAC-2000 Originating

The EAC-2000 constantly monitors and logs several alarm conditions. These conditions can be viewed using the ALA command. They are described in Volume 2, Operating Procedures.

Each type of alarm can be defined as "critical" or "log only" using the SET command. If an alarm defined as critical occurs more than a predetermined number of times, a **critical alarm** is said to exist. The system indicates any critical alarms at the beginning of each communication session.

The system can also be set up to call a predetermined number if a critical alarm exists. (The default setup is NOT to place a call when a critical alarm exists.) If the system has been programmed to automatically report alarms, it will attempt to do so only if all of the following conditions exist:

- A critical alarm exists.
- The console is locked.
- The mobile is connected and in service.
- The system has not successfully reported an alarm since the "Auto-Dial Enable" parameter was set to ARMED.
- The system has not unsuccessfully tried to report an alarm more than the designated number of times (the Auto-Dial Trials Max parameter) since the Auto-Dial Enable parameter was set to ARMED.

5.5.2 EAC-2000 Originating (Continued)

Successful Call Sequence. When an auto-dial call is made, the following sequence occurs:

1. As the call is auto-dialed, the local console displays *DIALING REMOTE LINK*. (<CR> from the local link at this point will abort the attempt.)
2. After the number is dialed, the EAC-2000 waits up to 90 seconds for a remote modem to answer and establish a connection.
3. Five seconds after connect, the EAC-2000 automatically lists the alarm report (see ALA Command in Volume 2, Operating Procedures). The report is echoed locally.
4. If the connection stays up for the duration of the report listing, the attempt is considered successful. The EAC-2000 disarms itself after a successful call to prevent duplicate reports.
5. After the report, the system waits up to 60 seconds for a <CR>. If a <CR> is received, a normal interactive session begins. Otherwise, the EAC-2000 ends the call.
6. If a second dial-up phone number is programmed, the sequence will be repeated using the second number.

Unsuccessful Call Attempts. The system will abort the call and consider the attempt a failure if either of the following occurs:

- The modems do not connect within a set period of time (the programmed "Max Auto-Dial Trial Period" parameter, default 90 seconds).
- The modems connect but lose the connection before the entire report is listed.

After a failed attempt, the system will display the message *ORIGINATION ATTEMPT FAILED* on the local console. It will then wait a specified period of time (the programmed "Delay Between Auto-Dial Retries" parameter). If all the conditions for making the call are still in effect, another attempt will be made.

One way to test the call origination feature is to artificially create an alarm by setting the +28 Volt Supply - Low Alarm Point to +35 Volts.

Section 6. Optimizing Performance

6.1 Introduction

After the EAC-2000 has been installed, the system must be checked out to determine if adjustments to the hand-in ndk threholds eded to ensure optimum performance.

6.2 Determining Hand-in and Hand-back Thresholds

To determine hand-in and hand-back thresholds, conduct coverage tests using equipment whose power and antenna configuration match the predominate customer equipment in the coverage area. Conduct the tests as follows:

1. Select the default hand-in and hand-back thresholds as a starting point for initial system testing. These thresholds will serve adequately for many installations.

2. Test these thresholds throughout the coverage area from an automobile with an outside cellular antenna. For best results, use a cellular mobile capable of displaying received signal levels and the channel on which it is operating. Make signal level measurements by monitoring the boosted control channel. Make calls to a test number to determine whether the call is set up via the booster or whether the mobile is being handed in or out of the boosted area.

   Make sure the hand-back threshold is at least 5 dB below the hand-in threshold. Setting the thresholds too low or too high can result in the following types of problems:

   - Hand-in threshold too low: Unnecessary boosting of mobiles that otherwise will have good service from the donor.

   - Hand-in threshold too high: Missing some mobiles that need boosting.

   - Hand-back threshold too low: Excessive noise on the call before it is handed back to the original voice channel.

   - Hand-back threshold too high: Too many hand-back attempts by the EAC-2000.

6.3 Setting Hand-in and Hand-back Thresholds

To change threshold settings, complete the following steps:

1. From the System Parameters Menu, type E <CR> to access the Thresholds and Power Control Menu.

Thresholds and Power Control Menu

		Default Values
A	Mobile Dynamic Power Control Threshold	-60 dBm
B	Hand-in Threshold	-90 dBm
C	Multi-Donor Activation Threshold	DISABLED
D	Hand-back Threshold	-100 dBm
E	Hand-in Mobile Power Step	0
F	Hand-back Mobile Power Step	0
G	RSSI Averaging Speed	MEDIUM
H	Delay Between Hand-in Attempts	5 Sec
I	Station Power Class Selective Boosting	BOOST ALL POWER CLASSES

2. Type B <CR> to access the Hand-in Threshold parameter. This parameter sets the signal level threshold at which a mobile on one of the donor voice channels becomes a candidate for boosting.

3. Enter the new threshold. The hand-in threshold has an allowable range of -100 dBm to -40 dBm. Entering 0 disables the threshold.

4. Type X <CR> to return to the Thresholds and Power Control Menu.

5. Type D <CR> to access the Hand-back Threshold parameter. This parameter sets the signal level threshold at which a mobile being boosted becomes a candidate for returning to the original donor site voice channel.

6. Enter the new threshold. The hand-back threshold has an allowable range of -120 dBm to -20 dBm. Entering 0 disables the threshold.

   The default values shown for the other parameters (menu entries A, E, F, G, H and I) are adequate for most installations. Refer to Volume 2, Operating Procedures, for explanations of these parameters if adjustment is necessary. Refer to Volume 1, Section 8, for setting the Multi-Donor Activation Threshold (menu entry C).

Section 7. Multi-Hop™ Operation

7.1 Introduction

Two or more EAC-2000 units may be set up to operate together in a line—for example, along a major corridor leading into a metropolitan area. This is referred to as Multi-hop operation. EAC-2000s and Extend-A-Cell IVs may also be mixed in a Multi-hop configuration. An example of a Multi-hop configuration is shown below.

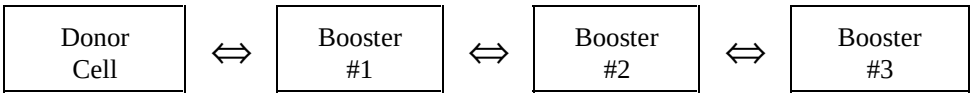

7.2 How Multi-Hop Operation Works

The boosters are set up so that there is a two-way RF path between the donor and booster #1 and between each pair of adjacent boosters. This arrangement can be used to handle situations in which a mobile—

- Places or answers a call while in the coverage area of any of the boosters.

- Drives across the coverage boundary:
  - Donor-to-booster
  - Booster-to-booster (away from donor)
  - Booster-to-booster (toward donor)
  - Booster-to-donor

Control Channel Response or Access. When a mobile places or answers a call, the first exchange of information occurs on the reverse control channel (from mobile to donor). If the call is a mobile-answered call, the exchange is a page response. If it is a mobile-originated call, the mobile does an access. There is little difference in the way EAC-2000 boosters handle these two. Since the mobiles self-locate, the control channel chosen for the access determines in which booster's coverage area (if any) the mobile is located.

7.2 How Multi-Hop Operation Works (Continued)

Repeating the Response or Access. All boosters between the terminating booster and the donor cell repeat the access or page response and decode it. From the decoding they extract the mobile identification number (MIN). Next, the cellular system assigns a voice channel to that particular mobile by sending, over the forward control channel, an initial voice channel designation (IVCD) message consisting of the mobile's MIN and a voice channel that will be used by the donor for the call.

The Multi-hop boosters are all monitoring the forward control channel data stream. The boosters that decode the access or page response on the reverse control channel also decode the corresponding IVCD message on the forward channel and change the channel to one of its boosted channels.

Booster #1 substitutes its chosen boosted channel for the donor voice channel in the IVCD message and sets up a boost path between the donor-assigned voice channel and the boosted voice channel of booster #1. Likewise, booster #2 changes the channel number in the IVCD message and sets up a boost path between the boosted voice channels of boosters #1 and #2.

All of the boosters between the terminating EAC-2000, where the call is placed, and the donor cell will in this fashion identify that particular mobile as a candidate for repeating and will decode the associated IVCD messages.

7.3 Installing the EAC-2000 in Multi-Hop Configuration

When installing the EAC-2000 in Multi-hop configuration, you should give special attention to—

- Achieving antenna isolation and signal level
- Enabling the Multi-hop feature
- Entering the EAC position
- Selecting boosted channels for each unit
- Assigning a booster link channel
- Setting hand-back and hand-in thresholds

7.3.1 Achieving Antenna Isolation and Signal Level

Antenna Isolation. The antenna isolation requirements for Multi-hop operation are the same as for standard operation.

Signal Level. For optimum performance, each booster that is NOT adjacent to the donor requires a forward signal level from the previous booster in the chain of at least -70 dBm (at the D1 antenna connector).

Each booster along the path must be able to communicate with the previous and next booster only. They are not required to be able to receive from or to transmit back to the donor cell site.

7.3.2 Enabling the Multi-Hop Feature

1. From the SET Main Menu, type C <CR> to display the System Parameters Menu.

2. Type A <CR> to display the Site ID Menu, shown here with the Multi-hop Feature enabled. (NOTE: The default setting for the Multi-hop Feature is disabled.)

```
Site ID Menu

A    Site Identification . . . . . . . . . . . . . . . . . . . . . Not Assigned
B    Multi-hop Feature . . . . . . . . . . . . ENABLED - MODE 1
```

3. Type B <CR> to access the Multi-hop Feature parameter. The following choices will appear:

   (0) Disabled
   (1) Enabled Mode 1–Adjacent to donor
   (2) Enabled Mode 2–Adjacent to EAC-2000
   (3) Enabled Mode 3–Adjacent to an EAC-IV (no prior EAC-2000 in chain)
   (4) Enabled Mode 4–Adjacent to an EAC-IV (with prior EAC-2000 in chain)

7.3.2 Enabling the Multi-hop Feature (Continued)

4. Select the proper mode. This depends only upon the kind of equipment that is adjacent to the EAC-2000.
   - Use Mode 1 if the EAC-2000 is the first in the chain, adjacent to the donor cell.
   - Use Mode 2 if the previous equipment is another EAC-2000.
   - Use Mode 3 if the previous equipment is an EAC-IV, and this is the closest EAC-2000 to the donor.
   - Use Mode 4 if the previous equipment is an EAC-IV, but there is at least one EAC-2000 between this and the donor.

   If Mode 3 or 4 is used, the "Booster Link Channel Previous EAC" will appear in the Control Channels Menu. The booster link channel number for the EAC-IV should be entered.

Notes on setup for EAC-IVs in a combination EAC-2000/EAC-IV Multi-hop system:

- The EAC-IV "position" parameter should be entered as "1" if the previous equipment is an EAC-2000. The EAC-2000 appears to be a donor to the EAC-IV.

7.3.3 Selecting Boosted Channels for Each Unit

A set of boosted channels must be chosen for each EAC-2000 in a multi-hop configuration. A particular EAC-2000 may be viewed as having the previous booster in the chain as a "donor."

7.3.3 Selecting Boosted Channels for Each Unit (Continued)

Therefore, in choosing the boosted channel set for a particular booster, ensure that the set is separated by at least three channels (90 kHz) from the channel sets of both the previous booster and the next one.

Figure 7-1. Example of Valid Channel Set

Donor Cell

Control channel:	316
Voice channels:	1,22,43,64,85,106,127,148,169,...295

EAC-2000 #1

Boosted control channel:	319
Donor control channel:	316
Boosted voice channels:	4,25,46,67
Donor voice channel list:	1,22,43,64,85,106,127,148,169,...295

EAC-2000 #2

Boosted control channel:	322
Donor control channel:	319
Boosted voice channels:	7,28,49,70
Donor voice channel list:	4,25,46,67

EAC-2000 #3

Boosted control channel:	325
Donor control channel:	322
Boosted voice channels:	10,31,52,73
Donor voice channel list:	7,28,49,70

7.3.4 Setting the Hand-back Threshold

For a Multi-hop configuration, there is an additional consideration in setting the hand-back threshold (the signal level at which mobiles are considered "weak," causing the mobile to be handed back to the previous EAC-2000 in the chain).

An EAC-2000 has no way of detecting whether a given call is being handled directly or by the next booster. Therefore, the hand-back threshold for a particular EAC-2000 must be set at least 10 dB below the minimum signal level received from the next booster.

> *Example: If booster #1 typically experiences a reverse signal level of -90 dBm from booster #2 when booster #2 is handling a call, then booster #1 should have its hand-back threshold no higher than -100 dBm. Otherwise, booster #1 might mistake a call being handled by booster #2 (or #3) as a weak mobile and try to hand it back to the donor cell. This would probably result in a dropped call.*

7.3.4 Setting the Hand-back Threshold (Continued)

To determine the hand-back threshold, the following procedure is recommended:

1. Disable the hand-in and hand-back thresholds for all boosters in the chain, as follows:

   a. From the System Parameters Menu, type: E <CR> to display the Thresholds and Power Control Menu.

```
Thresholds and Power Control Menu
                                                        Default Values
A    Mobile Dynamic Power Control Threshold . . . . . . . . . . . . . . . -60 dBm
B    Hand-in Threshold . . . . . . . . . . . . . . . . . . . . . . . . . -90 dBm
C    Multi-Donor Activation Threshold . . . . . . . . . . . . . . . . . . DISABLED
D    Hand-back Threshold . . . . . . . . . . . . . . . . . . . . . . . -100 dBm
E    Hand-in Mobile Power Step . . . . . . . . . . . . . . . . . . . . . . . . 0
F    Hand-back Mobile Power Step . . . . . . . . . . . . . . . . . . . . . . . 0
G    RSSI Averaging Speed . . . . . . . . . . . . . . . . . . . . . . . . MEDIUM
H    Delay Between Hand-in Attempts . . . . . . . . . . . . . . . . . . . . . 5 sec
I    Station Power Class Selective Boosting . BOOST ALL POWER CLASSES
```

   b. Type B <CR> to access the Hand-in Threshold parameter.
   c. Type 0 <CR> to disable the hand-in threshold.
   d. Type X <CR> to return to the Thresholds menu.
   e. Type D <CR> to access the Hand-back Threshold parameter.
   f. Type 0 to disable the hand-back threshold.

2. After powering up all of the EAC-2000 units, verify that the received signal levels meet the minimum needed.

3. Verify call operation with each booster, in good signal level conditions (within 1/2 mile of the booster). Make sure that calls can stay up at least 1 minute to eliminate link fading as a problem.

7.3.4 Setting the Hand-back Threshold (Continued)

4. Establish a **maximum** to use for the hand-back threshold:

   a. Set up a call on the last EAC-2000 in the chain at a good signal level position, sitting still.
   b. With the call up, monitor and record the reverse signal levels received by each booster all the way back to the donor. To do this—
      - Use the SCS command (from the > prompt) to identify which board pair is handling the call.
      - Type **R** (capital or lower case). The reverse signal level is reported for the board that is handling the call.

   The hand-back threshold should be at least 10 dB below the reverse RF level received when the next booster is handling the call. The allowable range is -120 dBm to -20 dBm.

   Example: If a system of boosters were spread out so that all were receiving -70 dBm in the forward direction, then the reverse signal levels from the next booster would be about -92 dBm. In this situation, the highest hand-back threshold recommended would be -102 dBm. If the threshold were set higher (e.g., -95 dBm), then normal signal level variations would cause an EAC-2000 to hand back a mobile actually being handled by another booster.

Set the new hand-back threshold as follows:

1. From the System Parameters Menu, type **E <CR>** to display the Thresholds and Power Control Menu.

2. Type **D <CR>** to access the Hand-back Threshold parameter.

3. Enter the new threshold, followed by **<CR>**.

There are no new limitations imposed upon the hand-in threshold in a Multi-hop configuration. However, it must be **at least 5 dB higher than the hand-back threshold** for that same EAC-2000. The allowable range is -120 dBm to -20 dBm.

Review the hand-in threshold to be sure it meets these criteria, and adjust it if necessary.

Section 8. Operation with Multi-Donor™ Units

8.1 Introduction

The basic EAC-2000 handles most cases of hand-in and hand-back to the donor cells. However, in installations where the EAC-2000 is adjacent to more than one donor, the "hand-back to a different cell site" situation requires special consideration.

8.1.1 Purpose of Multi-Donor Units

If a mobile being boosted back to one donor cell drives toward another donor cell, a dilemma occurs. The serving cellular system thinks the mobile is on one voice channel, while the booster actually has it translated to another channel.

Under normal operation, the signal at the donor from the booster is usually below the system's hand-off threshold. Thus, the donor will always identify the mobile as a candidate for hand-off, and the cellular system will try to find the mobile in the cell sites adjacent to the donor. However, because the mobile is actually on the booster's translated voice channel, it will not be seen in any adjacent or nearby cell site. Therefore, the system will not hand the mobile to another cell unless special means are provided to allow that cell site to measure the signal level of the boosted mobile.

This can be resolved by providing the adjacent cell sites with equipment with which to see the mobile on the voice channel that the cellular system thinks it is on. The cellular system can then determine which adjacent cell the mobile is driving into, assign a voice channel in that cell, and then send a hand-off message sending the mobile to that channel.

This can be achieved by placing a reverse-translating Multi-Donor Unit (MDU) at each of the cell sites adjacent to the booster.

8.1.2 MDU Operation

The MDU, which is connected to the cell-site receive antennas, scans for boosted mobiles and then translates those mobiles back to the donor's voice channel for presentation to the cell-site locating receiver.

The MDUs must know the relationships in effect between boosted and donor channels for calls being handled by the EAC-2000 booster(s). This is accomplished by data signaling between the EAC-2000 and any adjacent MDUs on a booster link channel.

The EAC-2000 looks for the boosted mobile signal level to fall below a settable multi-donor activation threshold. If this happens, the booster encodes and transmits the channel relationships to any MDUs that may be listening. This does not mean, however, that the mobile will necessarily be handed off. Transmission of this information merely allows the MDU to know (if it is able to see the mobile signal at a sufficient level) to which channel it should "untranslate" the mobile.

☞ NOTE: For a more complete description of MDU operation, see the Multi-Donor Extend-A-Cell® IV Technical Manual.

8.2 Installing the EAC-2000 for MDU Operation

When installing the EAC-2000 for operation with Multi-Donor Units, give special attention to—

- Achieving adequate signal level at the booster and at the MDU
- Assigning a booster link channel
- Setting a multi-donor activation threshold

8.2.1 Achieving Adequate Signal Level at the EAC-2000

The following signal level requirements apply to MDU configurations:

- If more than one donor cell site is to be used, then signal levels from each site must be at least -75 dBm at the EAC-2000.

- Signal levels on the reverse path (from the EAC-2000 to each donor cell site) must arrive at the donor cell sites at approximately the same amplitude. (This is necessary to keep the cellular system from erroneously trying to hand the mobile from one donor cell to the other.)

- Reverse path signals that arrive at the donor cell sites from the EAC-2000 must be within the hand-off hysteresis window used by the cellular system.

This signal balancing (if necessary) is usually accomplished by using multiple directional donor antennas at the EAC-2000, with the stronger path being attenuated with pads to match the weaker path.

Another alternative is to increase the hand-off hysteresis window in the cellular system for the particular donor cell sites that are under consideration.

Signal levels should be measured using a spectrum analyzer or FM service monitor. RF attenuators should be used on stronger signals to bring them within ± 1 dB of weaker signals.

8.2.2 Achieving Adequate Signal Level at the MDU

If MDUs are installed at cell sites adjacent to the EAC-2000, the RF path between the EAC-2000 M2 antenna and the "Booster Link Antenna" of the MDUs must be such that the MDU units can receive at least a -100 dBm signal when the booster transmits using PA 6 (the hand-off PA).

When installing antennas, ensure that this requirement is met.

8.2.3 Setting the Multi-Donor Activation Threshold

The multi-donor activation threshold defaults to DISABLED. In this condition, it does not allow the transmission of channel relationship messages to MDUs. Therefore, you will need to set the multi-donor activation threshold in order to operate with MDUs. Usually, a threshold halfway between the hand-in threshold and the hand-back threshold will give good performance without generating excessive transmissions to the MDUs.

To set the threshold, complete the following steps:

1. From the System Parameters Menu, type E <CR> to display the Thresholds and Power Control Menu.

Thresholds and Power Control Menu

		Default Values
A	Mobile Dynamic Power Control Threshold	-60 dBm
B	Hand-in Threshold	-90 dBm
C	Multi-Donor Activation Threshold	DISABLED
D	Hand-back Threshold	-100 dBm
E	Hand-in Mobile Power Step	0
F	Hand-back Mobile Power Step	0
G	RSSI Averaging Speed	MEDIUM
H	Delay Between Hand-in Attempts	5 sec
I	Station Power Class Selective Boosting	BOOST ALL POWER CLASSES

2. Type C <CR> to access the Multi-Donor Activation Threshold parameter.

3. Enter the chosen threshold, followed by <CR>.

☞ NOTE: For additional hints on achieving successful multi-donor operation and on troubleshooting, refer to the Multi-Donor Unit technical manual.

8.2.4 Assigning a Booster Link Channel

A booster link channel must be assigned. Choose a channel that meets the following requirements:

- May be any channel in the band (control or voice), including the extended band voice channels.
- Must be different from any donor or boosted channel in the same EAC-2000.
- Should meet the same separation considerations as for a voice channel.

One way of meeting these requirements is to assign one of the unused voice channels in the same 23-channel separation sequence as the link channel.

To enter the booster link channel, open the Control Channels Menu after setting the thresholds.

If both Multi-hop configuration and Multi-Donor Units are used, the single booster link channel will be used for both types of signaling.

Section 9. Reserved for Future Use

Section 10. Combined Operation: Multi-Cabinet / Multi-Hop / Multi-Donor

10.1 Introduction

EAC-2000 installations may be set up to combine Multi-cabinet operation, Multi-hop operation and multi-donor units (MDUs). Figure 10-1 shows an example of a complex configuration of donor cell sites, EAC-2000 cabinets, and MDUs.

Figure 10-1. Combined Configuration Example

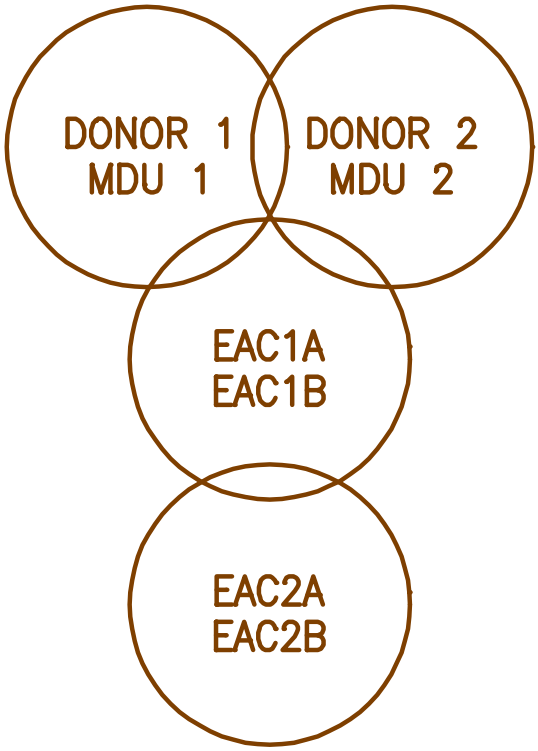

10.2 Installing the EAC-2000 for Combined Operation

10.2.1 Requirements

When installing the EAC-2000 for combined operation, the following requirements must be met:

- A unique booster link channel must be set for each cabinet.

- Any listening MDUs must include the booster link channels of all cabinets in nearby EAC-2000s in their lists.

- The boosted voice channels of the EAC-2000 sites must be at least three channels (90 kHz) away from any possible donor channel.

- The Booster Link Channel–Previous EAC parameters must be set to the booster link channel of the previous EAC-2000 cabinet that is boosting the control channel (for Mode 3 or Mode 4 EAC-2000s).

- Donor voice channels must be listed in the multiple SAT list in the following situation:
  - EAC 2 is not adjacent to the primary donor cell.
  - A previous booster in the chain (EAC 1) has more than one possible donor (donors 1 and 2).
  - EAC 1 could boost calls from either donor to EAC 2.
  - The donor voice channels for EAC 1 must be listed in the multiple SAT list for EAC 2.

10.2.2 Channel Assignments

Figure 10-2 shows a set of channel assignments (given the donor control channels) that meets these requirements for the configuration shown in Figure 10-1. Other valid choices are also possible. In this figure, notice that:

- In EAC 2A, the donor voice channels in the multiple SAT list include all of the boosted voice channels from EAC 1A (4,25,46,67) and EAC 1B (109,130,151,172,193).

- Minimum separation of three channels is maintained between donor and boosted channels.

Figure 10-2. Channel Assignment Example

Cell/Unit	Channel Type	Channels
Donor 1	Control channel	316 (SAT 5970)
	Voice channels	1,22,43,64,85,106,127,148,169 ...295
Donor 2	Control channel	325 (SAT 6000)
	Voice channels	10,31,52,73,94,115,136,157,178 ... 304
MDU 1	Booster link channel list	88,214
MDU 2	Booster link channel list	88,214
EAC 1A	Boosted control channel	319
	Donor control channel	316
	Boosted voice channels	4,25,46,67
	Donor voice channels (SAT = 5970)	1,22,43,64,85,106,127,148...295
	Booster link channel	88
	Booster link channel—previous EAC	(Not used)
EAC 1B	Boosted control channel	(Not used)
	Donor control channel	(Not used)
	Boosted voice channels	109,130,151,172,193
	Donor voice channels (SAT = 6000)	10,31,52,73,94,115,136,157...304
	Booster link channel	214
	Booster link channel—previous EAC	(Not used)
EAC 2A	Boosted control channel	322
	Donor control channel	319
	Boosted voice channels	7,28,49,70
	Donor voice channels (SAT = Multiple)	4,25,46,67,109,130,151,172,193
	Booster link channel	91
	Booster link channel—previous EAC	(Not used)
EAC 2B	Boosted control channel	(Not used)
	Donor control channel	(Not used)
	Boosted voice channels	112,133,154,175,196
	Donor voice channels	(empty)
	Booster link channel	217
	Booster link channel—previous EAC	(Not used)

AMPS
EAC-2000™ Manual

Volume 2
Operating Procedures

27-7656-2

Issue 12/95

© Copyright 1995 Allen Telecom Systems
All Rights Reserved

ALLEN TELECOM GROUP
SYSTEMS
DIVISION ™

Field Support

If you need technical assistance with the EAC-2000™, contact Allen Telecom Systems at one of the following telephone numbers:

Extend-A-Cell HOTLINE:		(800) 800-EAC4 (3224)
	or	(216) 349-8413
Systems Engineering Department:		(216) 349-8413

Contents

Page

List of Figures vi

1. Introduction 1-1

1.1 About This Volume 1-1
1.2 Overview of EAC-2000 Operation 1-2
1.2.1 Establishing the Local Link 1-2
1.2.2 Establishing the Remote Link 1-4
1.3 Entering Commands 1-6
1.3.1 Syntax 1-6
1.3.2 Command Entry 1-7
1.3.3 Moving Through SET Menus 1-7
1.3.4 Escaping from Continuous Cycles 1-8
1.3.5 Ending a Session 1-8
1.4 Overview of Commands 1-9

2. SET Command 2-1

2.1 Introduction 2-1
2.1.1 SET Menu Map 2-1
2.1.2 Parameter Summaries 2-1
2.2 Main Menu 2-12
2.3 RF Boards Menu 2-12
2.3.1 RF Board Position Menus 2-13
• Status 2-13
• Diversity 2-14
2.4 Power Amplifiers Menu 2-14
• Forward PA Power Step - Voice 2-15
• Forward PA Power Step - Control 2-15
• Forward PA Power Step - Hand-off 2-15
• Forward PA Power Low Alarm Point - Voice 2-16
• Forward PA Power Low Alarm Point - Control 2-16
• Forward PA Power Low Alarm Point - Hand-off 2-17
• Reverse PA Power Set - Voice 2-18
• Reverse PA Power Set - Control 2-18
• Key Forward PA 2-18
• Key Reverse PA 2-19

Page

2. SET Command (Continued)

2.5 System Parameters Menu 2-19
2.5.1 Site ID Menu 2-20
- Site Identification 2-20
- Multi-Hop Feature 2-20

2.5.2 Control Channels Menu 2-21
- Donor Control Channel 2-21
- Boosted Control Channel 2-22
- RF Board to Use for Control Channel 2-22
- Control Channel State During "All Channels Busy" . . . 2-23
- Directed Retry Channels 2-24
- Back-up Control Channel Option 2-24
- Revertive Control Channel Option 2-25
- Substitute Control Channel 2-25
- Booster Link Channel 2-26
- Booster Link Channel—Previous EAC 2-26

2.5.3 Voice Channels Menu 2-27
- Donor Voice Channel Lists (5970–6030 Hz SAT) 2-28
- Donor Voice Channels List (Multiple SAT) 2-29
- Boosted Voice Channel Positions 2–5 and 7-11 2-29

2.5.4 Modem Control Menu 2-30
- Master Password 2-30
- Restricted Password 2-31
- Console Time-out 2-31
- Auto-Dial Enable 2-31
- Dial-up Phone Numbers (1 and 2) 2-32
- Auto-Dial Trials Max 2-33
- Delay Between Auto-Dial Retries 2-34
- Max Auto-Dial Trial Period 2-34
- Modem Setup 2-35
- Init String 2-35
- Dial Prefix String 2-37
- Hang Up String 2-37
- Local Port Baud Rate 2-38
- Local Port Comm Params 2-28
- Remote Port Baud Rate 2-39
- Remote Port Comm Params 2-40
- Remote Port Handshake 2-40
- Modem Mobile MIN 2-41
- Modem Mobile Power Step 2-41

Page

2. SET Command (Continued)

2.5.5 Thresholds and Power Control Menu 2-42
- Mobile Dynamic Power Control Threshold 2-42
- Hand-in Threshold 2-43
- Multi-Donor Activation Threshold 2-44
- Hand-back Threshold 2-45
- Hand-in Mobile Power Step 2-45
- Hand-back Mobile Power Step 2-45
- RSSI Averaging Speed 2-46
- Delay Between Hand-in Attempts 2-47
- Station Power Class Selective Boosting 2-47

2.5.6 Disconnect Control Menu 2-48
- Donor RSSI 2-48
- SAT Fade Time-out 2-49
- Max Num of Hand-back Attempts Per Call 2-49
- Minimum Delay between Hand-back Attempts 2-50

2.5.7 Call Processing Parameters Menu 2-50
- Mobile RSSI>Threshold Parameters 2-51
- Hand-back/Grab-back Control 2-51

2.6 Alarms Menu 2-52
2.6.1 Antenna Return Loss - Low Alarm Point 2-51
2.6.2 PA to Antenna Loss - High Alarm Point 2-53
2.6.3 PA Temperature - High Alarm Point 2-52
2.6.4 PA Temperature - Fan Activation Point 2-53
2.6.5 PA Temp - PA Power Cutback Point 2-54
2.6.6 Mobile Power Control Causes PA Power Cutback 2-55
2.6.7 +28 Volt Supply - PA Power Cutback Point 2-55
2.6.8 +28 Volt Supply - Low Alarm Point 2-56
2.6.9 +12 Volt Supply - Low Alarm Point 2-56
2.6.10 +6 Volt Supply - Low Alarm Point 2-56
2.6.11 External Analog Inputs Menu 2-57
2.6.12 External Digital Inputs Menu 2-58
2.6.13 External Digital Outputs Menu 2-59
2.6.14 Critical Alarms Menu 2-60
2.6.15 RSSI - Alarm Points Menu 2-61
- Donor Control Channel RSSI - High Alarm Point 2-61
- Donor Control Channel RSSI - Low Alarm Point 2-61
- Donor Voice Channel RSSI - High Alarm Point 2-62

2.7 Set Defaults Feature 2-62

Page

3. System Monitoring Commands 3-1

3.1 Introduction 3-1
3.2 SSS (Show System Status) Command 3-3
3.3 SCS (Show Call Status) Command 3-5
3.4 RSS (RSSI Report) Command 3-9
3.5 SSR (Scanned RSSI Report) Command 3-10
3.6 PWR (PA Power Display) Command 3-12
3.7 SAT (SAT Report) Command 3-13
3.8 ALA (Alarm Report) Command 3-14
3.9 DCS (Display Call Statistics) Command 3-20
3.10 DCH (Display Call History) Command 3-27
3.11 TIM (Time Display and Change) Command 3-29
3.12 MIN (Mobile ID Number) Command 3-30
3.13 REV (Show Hardware Revisions) Command 3-32

4. Special Commands 4-1

4.1 Introduction 4-1
4.2 Commands 4-1

List of Figures

Page

1-1. Commonly Used Commands 1-9
2-1. SET Command Menu Map 2-2
2-2. RF Board Parameters 2-3
2-3. Power Amplifier Parameters 2-3
2-4. System Parameters 2-4
2-5. Alarm Parameters 2-10
3-1. Sample SSS Report 3-2
3-2. Sample SCS Report 3-5
3-3. Sample List of RSSI Readings 3-9
3-4. Sample List of Power Readings 3-12
3-5. Sample List of SAT Readings 3-13
3-6. Sample ALA Report 3-15
3-7. Sample DCS Report 3-21
3-8. Sample DCH Report 3-22
3-9. Sample TIM Screen 3-28
3-10. Sample MIN Screen 3-30

Section 1. Introduction

1.1 About This Volume

This is the second of three volumes pertaining to the AMPS EAC-2000™ booster. Extensive monitor software is included with the EAC-2000 system, which allows the installer or service provider to control and monitor the system's performance. This manual is intended to assist the installer or service provider in using the provided software to ensure optimum performance of the EAC-2000.

This volume describes the terminal interface to the EAC-2000, which is used to set parameters, monitor call activity and call statistics, and report and diagnose problems. It includes procedures for entering commands and setting parameters and provides information on interpreting the results. The volume is divided into four sections:

- Section 1. Introduction: Provides an overview of EAC-2000 operation via local and remote serial link, guidelines for command entry, and an overview of the commands that may be entered.

- Section 2. SET Command: Describes all of the submenus that can be accessed through the SET command and provides guidelines for setting parameters.

- Section 3. System Monitoring Commands: Describes commands that can be used to obtain information on EAC-2000 operations, and guidelines for interpreting the results.

- Section 4. Special Commands: Describes various higher level commands used to verify hardware.

For instructions on installing the EAC-2000, setting initial parameters, and making adjustments to achieve optimum performance, refer to Volume 1, Installation Procedures. For a more detailed description of the EAC-2000 and how it works, refer to Volume 3, Technical Information.

1.2 Overview of EAC-2000 Operation

Virtually all of the operating parameters of the EAC-2000 are under software control. These parameters can be changed and monitored locally, through a serial link attached to a standard RS232, ASCII terminal or personal computer. The same control can be exercised remotely via a telephone line, modem, and the same kind of terminal.

1.2.1 Establishing the Local Link

The EAC-2000 communicates with a conventional ASCII, RS232 terminal connected to the 25-pin D-sub connector on the controller board. To bring up the local link:

1. Connect and power up the terminal.

2. Set the terminal for 9600 baud, even parity, 7 data bits, 1 stop bit, full duplex (no local echo). If possible, set the terminal to all capitals, disable auto XON/XOFF and soft scroll, and "carriage return only" (not carriage return plus line feed).

3. Power up the EAC-2000 (see Volume 1, Section 4). After several seconds, the terminal should respond *CONSOLE LOCKED*.

4. Press <CR> (carriage return or enter). A welcome message and prompt for password should appear. If the password is not prompted for, the "password bypass" switch is activated.

   If the response is illegible, check the terminal setup. If nothing comes up, power down and recheck the power hookup, the terminal hookup, and terminal setup. If you are not sure of the EAC-2000 terminal setup or password, see note following step #5.

5. Enter a master password (the default master password is *1234*) or restricted password. A master password gives access to all system setup and monitor commands. A restricted password gives access to only certain system monitor commands.

   An accepted password should result in a salutation followed by the command entry level prompt (>).

1.2.1 Establishing the Local Link (Continued)

If you forget the password or terminal setup. . .

The password and the terminal setup may be changed by the user during a session. If the settings were forgotten, it would not normally be possible to bring up the local link. A mechanism is provided to recover from this situation.

PA interface board 1 is located on PA cage 1, behind a panel. On this board is a 4-position dip switch. Switch 1 is "password bypass enable."

If you have forgotten the password, but know the terminal setup (i.e., a carriage return causes the welcome message to appear, but your password is not accepted), perform the following procedure:

1. Set the password bypass switch to "on."
2. Hit **<CR>** at the terminal. The password is not required now.
3. Type **SET <CR>** and examine/change the password.
4. Set the password bypass switch to "off."

If you have forgotten the terminal setup, perform the following procedure:

1. Set the password bypass switch "on."
2. Cycle power on the EAC-2000. The local port will operate at 9600, 7 even, 1 stop (regardless of how it was set).
3. Change the terminal to 9600, 7 even, 1 stop and hit **<CR>**. The welcome message should appear and the password will be bypassed.
4. Type **SET <CR>** and examine/change the modem setup and the password. Exit SET.
5. Set the password bypass switch to "off."
6. Type **LOC <CR>**. The local port will operate as SET.
7. Change the terminal setup to match the setup entered with SET.
8. Hit **<CR>** to open up the local port at the new setup. Record the setup.

1.2.2 Establishing the Remote Link

The EAC-2000 utilizes an MNP-10 compatible modem and Motorola cellular mobile.

This equipment makes it possible to dial up and communicate with the EAC-2000 using a remote terminal and modem of either type listed. The EAC-2000 modem automatically determines the type of modem calling it and adapts to its baud rate. The EAC-2000 can also be set up to automatically dial a predetermined telephone number if a major fault occurs.

Once the remote link is established, the interface with the system is exactly like that on the local link, but at a different baud rate. If both links are up, characters typed on either terminal are echoed to both, along with the resulting EAC-2000 output. This makes it possible for an experienced operator to exercise the system remotely while someone watches locally, or for the two to exercise the system together.

For instructions on setting up and testing the cellular mobile and for answering calls originated by an EAC-2000, refer to Volume 1, Section 5.

1.2.2 Establishing the Remote Link (Continued)

To communicate with the EAC-2000 from a remote location:

1. Hook up a conventional ASCII terminal through a compatible modem.

2. Set the terminal and modem to 4800, 2400 or 1200, 7 data bits, even parity, 1 stop bit, full duplex (no local echo). If possible, set the terminal to all capitals.

3. Dial the phone number of the mobile in the EAC-2000. After about one ring, the EAC-2000 will answer and try to set up communications by providing a continuous answer-back tone.

   If the modems fail to connect, the EAC-2000 will terminate the call. If they are successful in establishing a link, the remote modem will indicate *CONNECT*.

   ☞ NOTE: If you dial the EAC-2000 with a high-speed (above 1200) modem, the modems may take up to a minute to negotiate the link.

4. Press <CR> and look for the welcome message. From this point on, communicating over the remote link is similar to communicating over the local link.

   ☞ When both links are established, the baud rate on the local link will slow to match the remote link rate.

   ☞ The remote link is more prone to transmission errors because of the noisier link. These errors, while a nuisance, do not cause major problems because the system always asks for confirmation of serious changes.

1.3 Entering Commands

1.3.1 Syntax

The system responds to commands that consist of three letters followed by up to three data fields, as follows:

COM [FIELD 1 -] [FIELD 2 =] [FIELD 3] <CR>

In this syntax—

- COM is the particular three-letter command.
- FIELD 1 consists of up to four hex characters followed by a hyphen (-).
- FIELD 2 consists of up to four hex characters followed by an equals (=) sign.
- FIELD 3 consists of up to four hex characters.
- Each command ends with a carriage return (<CR>).

After the COMmand has been entered, the system usually prompts for data it needs. If a certain field is not required, any data entered in that field will be ignored.

1.3.2 Command Entry

When entering commands—

- Spaces may be added to separate the fields, after the first three letters have been entered.
- Leading zeros may be omitted.
- Use DELETE or BACKSPACE to correct mistakes.
- End the command with <CR>.

Command Entry Symbols	
>	**Command entry level** prompt. Indicates that the system is ready to accept commands.
<CR>	**Carriage return** or enter.
<CTRL>	**Control.** The control key is used in combination with other keys. For example, <CTRL> Z means to hold down the control key while pressing the Z key.
ESC	**Escape.** A single key marked ESC on most keyboards.

1.3.3 Moving Through SET Menus

The SET command gives access to a progression of menus used to set EAC-2000 parameters (see Section 2). Use the keystrokes described below to move forward and backward through these menus.

- Moving Forward. Each command brings up a menu of items from which to choose, with a character in front of each item. To select an item, type the character and <CR>. The next menu (or the parameter to be changed) will be displayed.

- Moving Backward. To move backward along a path, type X <CR>, or just <CR>. The previous menu will be displayed. Repeat until you are back at the SET Main Menu.

- To Exit SET. Type <CTRL> X at any menu level. Or, type X <CR> while at the Main Menu level.

1.3.4 Escaping from Continuous Cycles

Some commands cause a continuous process to begin. To escape this mode and return to the > prompt, hit ESC or type <CTRL> Z.

☞ NOTE: Entering ESC or <CTRL> Z from the > prompt will cause the characters entered on the line to be erased.

1.3.5 Ending a Session

A session can be ended using LOC, RES, or the inactivity timeout.

- LOC Command: Should be used if the session involves only system monitoring or minor parameter changes. Ensures security but lets alarms and call statistics continue to accumulate. Will terminate remote link.

- RES Command: Should be used if extensive parameter changes have been made during a session. Ensures that all parameter changes take effect, since all hardware is initialized after a reset. Ensures security because the password must be re-entered to get back to the command level. Initializes all alarm condition counters to 0. Will terminate remote link.

- Inactivity Timeout: Inactivity timer (default 5 minutes) will terminate any currently running command, and simulates LOC, if a keyboard entry is not detected within the designated period. Avoid leaving the EAC-2000 in an insecure state if the remote link is lost before the session is properly ended. This will terminate the remote link.

1.4 Overview of Commands

Figure 1-1 presents a summary of the most commonly used commands.

Figure 1-1. Commonly Used Commands

Command	Meaning	Purpose
HEL	HELp	Lists syntax and function for system commands. *(If session was begun with restricted password, gives abbreviated list.)*
SET	SETup	Invokes a menu-driven entry mode used to inspect or change all EAC-2000 operating parameters. (*To exit this command, type <CTRL> X and answer N <CR>.)*
SSS	Show System Status	Lists current EAC-2000 parameter settings and conditions of monitored input parameters.
SCS†	Show Call Status	Shows current status of each board pair. Updates listing if status changes (e.g., if a call is set up or taken down) and gives reason for the change.
RSS†	RSSI Report	Gives continuously updated reading of the received signal strength on all RF boards.
SSR†	Show Scanned RSSI	Shows average RSSIs of 18 channels being scanned.
PWR†	PoWeR display	Repeatedly lists power readings on the 7 PAs.
SAT†	SAT report	Repeatedly lists SAT readings on all boards.
ALA	ALArm report	Reports number of times various alarm conditions occurred since last system reset. (ALA=0 zeroes alarm counts.)
DCS	Display Call Statistics	Displays various call statistics per board pair. (DCS=0 zeroes statistics.)
DCH	Display Call History	Displays hourly totals of certain call statistics for the last running week. (DCH=0 zeroes some of these.)
TIM	TIMe	Displays/changes current clock time.
RES	RESet	Resets EAC-2000, preserves parameters in effect when command is issued.
LOC	LOCk	Forces password entry before accepting other commands.
MIN†	Mobile ID Nbr.	Lists the last five access attempts by mobiles.
REV	REVision	Displays hardware revisions within the EAC-2000.

† To exit this command, hit ESC or <CTRL> Z.

Section 2. SET Command

2.1 Introduction

From the command entry level prompt (>), the SET command invokes the setup utility which displays a progression of menus. The menus provide a guided path to each EAC-2000 parameter.

2.1.1 SET Menu Map

Figure 2-1 illustrates the paths to follow through the SET menus to reach each available parameter.

2.1.2 Parameter Summaries

Figures 2-2 through 2-5 summarize the RF board, power amplifier, system, and alarm parameters that can be programmed using the SET command. Following the parameter summaries, each SET menu and its associated parameters are described in detail.

Figure 2-1. SET Command Menu Map

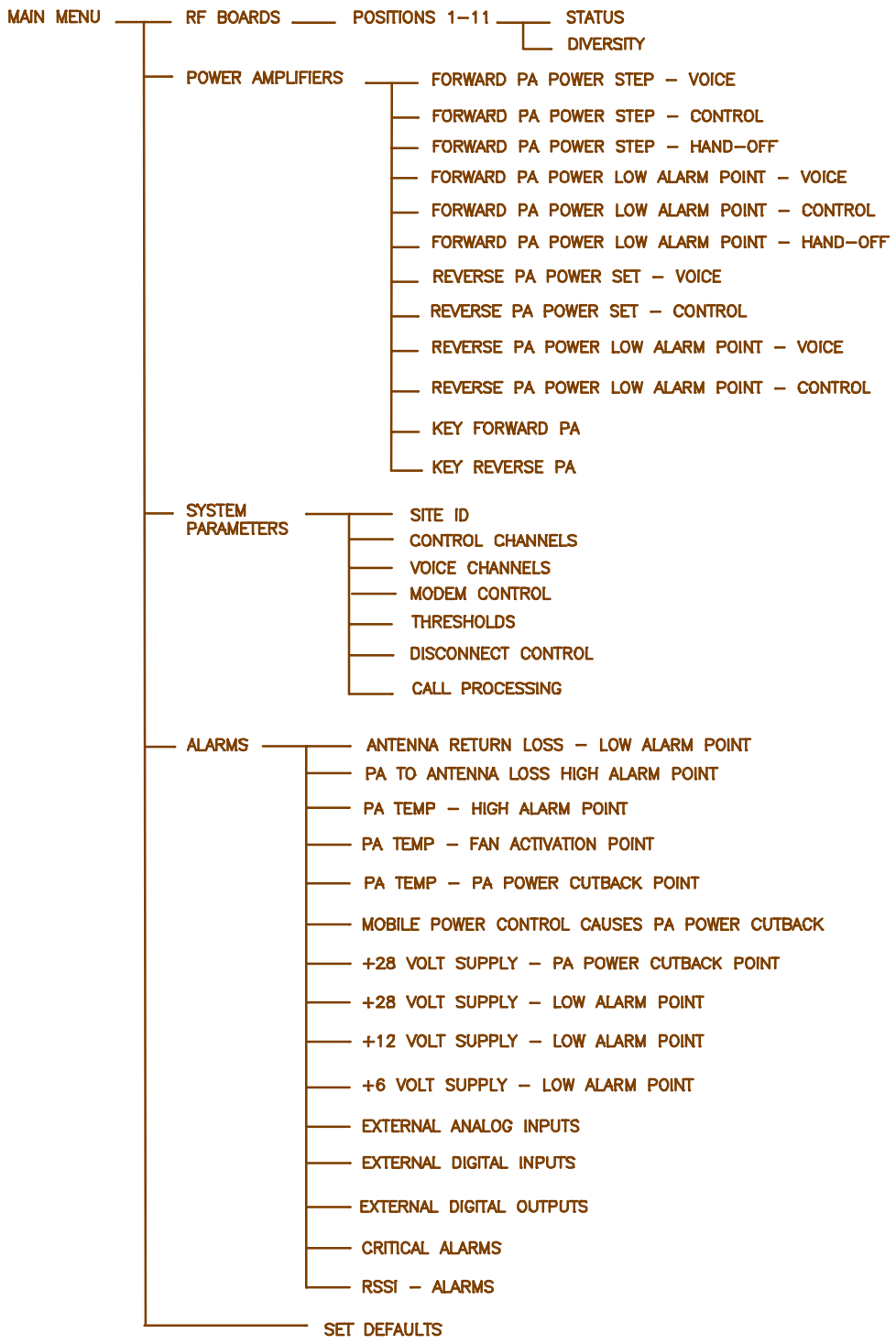

Figure 2-2. RF Board Parameters

Parameter (For each RF board)	Options	Default	Description
STATUS	Disabled Enabled None	Enabled	Defines how the board is to be activated.
DIVERSITY	Diversity ON Antenna M1 selected Antenna M2 selected	Varies according to board	Defines antenna to use for reverse receiver.

Figure 2-3. Power Amplifier Parameters

Parameter	Options	Default	Description
FORWARD PA POWER STEP - VOICE	0–3	0	Sets the output power electronically to one of four levels. Each step is about -4 dB.
FORWARD PA POWER STEP - CONTROL			
FORWARD PA POWER STEP - HAND-OFF			
FORWARD PA POWER LOW ALARM POINT - VOICE	0, 30–50	+40 dBm	Sets low power alarm threshold for forward PAs. Should be 5 to 6 dB below power read using "key forward."
FORWARD PA POWER LOW ALARM POINT - CONTROL			
FORWARD PA POWER LOW ALARM POINT - HAND-OFF			
REVERSE PA POWER SET VOICE	5–20 dBm	+20 dBm	Sets reverse output power level (referenced at D1 antenna).
REVERSE PA POWER SET CONTROL			
REVERSE PA POWER LOW ALARM POINT - VOICE	0, 1–23	+15 dBm	Sets low power alarm threshold for reverse PAs. Should be 5 dB below power read using "key reverse."
REVERSE PA POWER LOW ALARM POINT - CONTROL			
KEY FORWARD PA	PAs 1–11		Keys PAs for power adjust and combiner tuning.
KEY REVERSE PA			Keys reverse PA for reverse power monitoring.

Figure 2-4. System Parameters

Parameter	Options	Default	Description
Site ID Menu			
SITE ID	Up to 20 characters	Not assigned	Identifies the site for remote mode operation.
MULTI-HOP FEATURE	(0) Disabled (1) Enabled - Mode 1 (2) Enabled - Mode 2 (3) Enabled - Mode 3 (4) Enabled - Mode 4	Disabled	Turns Multi-hop operation on or off.
Control Channels Menu			
DONOR CONTROL CHANNEL	1–799, 991–1023	337	Channel used as the input for frequency translation. Should be set to donor site control channel.
BOOSTED CONTROL CHANNEL	1–799, 991–1023	340	Channel to which donor control channel is translated. Should be separated from donor control channel and any possible donor voice channel by at least three channels (90 kHz).
RF BOARD TO USE FOR CONTROL CHANNEL	0 1–5 and 7–11	1	Sets equipment to be used to boost the control channel.
CONTROL CHANNEL STATE DURING "ALL CHANNELS BUSY"	(0) Off (1) Deny accesses (2) Deny accesses, but count (3) Boost accesses (4) Directed retry	Directed retry	State of boosted control channel when all boosted voice channels are occupied. (For description of each option, see section 2.5.2.)
DIRECTED RETRY CHANNELS	Disabled Any valid channel	All disabled	Control channels of nearby cell sites.
BACK-UP CONTROL CHANNEL OPTION	Enabled Disabled	Disabled	Board 6 may be used to boost the control channel if board 1 is disabled.
REVERTIVE CONTROL CHANNEL OPTION	Enabled Disabled	Disabled	Controls using board 1 to boost the last call.
SUBSTITUTE CONTROL CHANNEL	Disabled 1–799, 991–1023	Disabled	Keeps mobiles not in a call from roaming when control channel boards are being used to boost a voice call.
BOOSTER LINK CHANNEL	1–799, 991–1023	550	If Multi-Donor feature is enabled, assigns channel used to transmit call setup information.

Continued . . .

Figure 2-4. System Parameters (Continued)

Parameter	Options	Default	Description
BOOSTER LINK CHANNEL - PREVIOUS EAC	1–799, 991–1023	571	If Multi-hop feature is enabled, assigns channel used to receive call setup information from previous EAC in a Multi-hop configuration.
Voice Channels Menu			
DONOR VOICE CHANNEL LIST	Any valid channel and SAT, up to 105 total	None assigned	Voice channels to be scanned for mobile candidates to be boosted. A list of channels may be entered for each of the three SAT frequencies.
BOOSTED VOICE CHANNELS	1–799, 991–1023	See chart below*	Channels to which the donor voice channels are translated when a mobile is being boosted. Should be consistent with the frequency plan of the cellular system.
Modem Control Menu			
MASTER PASSWORD	Up to 12 alphanumeric characters	1234	Used to gain access to system monitoring and setup commands.
RESTRICTED PASSWORD	Up to 12 alphanumeric characters	5678	Used to gain access to system monitor commands.
CONSOLE TIME-OUT	10-2500 seconds	300 seconds	Maximum time console will wait before locking during periods of no keyboard activity.
AUTO-DIAL ENABLE	Armed Disarmed	Disarmed	Used to arm/disarm modem's ability to automatically dial a designated phone number when critical alarms exist.

Boosted Voice Channel Defaults

Board	1	2	3	4	5	7	8	9	10	11
	340	361	382	403	424	445	466	487	508	529

Continued . . .

Figure 2-4. System Parameters (Continued)

Parameter	Options	Default	Description
DIAL-UP PHONE NUMBER 1	0 (none) Up to 48 characters	12163498684	Assigns the number to be dialed by the EAC-2000 when a critical alarm exists.
DIAL-UP PHONE NUMBER 2	0 (none) Up to 48 characters	None	A second number to be dialed when a critical alarm exists. If enabled, the EAC-2000 will attempt to log an alarm report to both numbers.
AUTO-DIAL TRIALS MAX	0-10	10	Maximum number of auto-dial trials the modem will conduct if there are critical alarms to be reported and a connection cannot be made.
DELAY BETWEEN AUTO-DIAL RETRIES	0-2500 seconds	60 seconds	Period the modem will wait after an unsuccessful auto-dial trial before trying again.
MAX AUTO-DIAL TRIAL PERIOD	0-2500 seconds	90 seconds	Maximum time modem will wait before terminating an auto-dial trial if connection cannot be made.
MODEM MOBILE MIN	10 digits	1234567890	Mobile Identification Number of cellular mobile booster. Used to identify calls to and from the remote link; these calls are not boosted and therefore, do not occupy a boosted voice channel.
MODEM MOBILE POWER STEP	0–7	7	Mobile attenuation code (VMAC) for cellular mobile used to establish remote link. Power step 0 = full power (3 watts); each additional step = a 4 dB decrease in power (i.e., step 7 = 28 dB below full power).
Modem Setup Menu			
INIT STRING	48 characters	AT!~AT!~AT&F X0E0\D2S0=1 S10=20)M1:E0*H1!	String of characters sent to modem on power up and LOC.
DIAL COMMAND	16 characters	ATDT	String of characters sent to modem prior to dialing out phone number.
HANGUP STRING	16 characters	~~~+++~~~ATH0!	

Continued . . .

Figure 2-4. System Parameters (Continued)

Parameter	Options	Default	Description
Modem Setup Menu (Continued)			
LOCAL PORT BAUD RATE	1) 150 2) 300 3) 600 4) 1200 5) 2400 6) 4800 7) 9600 8) 19200	9600	Defines characteristics of ASCII link to local port.
LOCAL PORT COMM PARAMETERS	See chart below*	7 data, EVEN tx parity, IGNORE rx parity, 1 stop	
REMOTE PORT BAUD RATE	See list for LOCAL PORT BAUD RATE	9600 (Microcomm modem) 2400 (Millidyne modem)	Defines characteristics of ASCII link to modem in EAC-2000. Note: If using a Microcomm modem, you may access remote link at any defined speed less than the setting.
REMOTE PORT COMM PARAMETERS	See chart below*	7 data, EVEN tx parity, CHECK rx parity, 1 stop	
REMOTE PORT HANDSHAKE	1) None or XON/XOFF 2) CTS/RTS	CTS/RTS	

***Possible Selections for Local and Remote Port Comm Parameters**

Letter Entry	Description
A	7 data, EVEN tx parity, CHECK rx parity, 1 stop
B	7 data, ODD tx parity, CHECK rx parity, 1 stop
C	7 data, SPACE tx parity, CHECK rx parity, 1 stop
D	7 data, MARK tx parity, CHECK rx parity, 1 stop
E	7 data, EVEN tx parity, IGNORE rx parity, 1 stop
F	7 data, ODD tx parity, IGNORE rx parity, 1 stop
G	7 data, SPACE tx parity, IGNORE rx parity, 1 stop
H	7 data, MARK tx parity, IGNORE rx parity, 1 stop
I	8 data, NO parity, 1 stop
J	7 data, EVEN tx parity, CHECK rx parity, 2 stop
K	7 data, ODD tx parity, CHECK rx parity, 2 stop
L	7 data, SPACE tx parity, CHECK rx parity, 2 stop
M	7 data, MARK tx parity, CHECK rx parity, 2 stop
N	7 data, EVEN tx parity, IGNORE rx parity, 2 stop
O	7 data, ODD tx parity, IGNORE rx parity, 2 stop
P	7 data, SPACE tx parity, IGNORE rx parity, 2 stop
Q	7 data, MARK tx parity, IGNORE rx parity, 2 stop
R	8 data, NO parity, 2 stop

Continued . . .

Figure 2-4. System Parameters (Continued)

Parameter	Options	Default	Description
Thresholds and Power Control Menu			
MOBILE DYNAMIC POWER CONTROL THRESHOLD	(0) Disabled -120 to -20 dBm	-60 dBm	Threshold above which the EAC-2000 will reduce the power of the mobile.
HAND-IN THRESHOLD	(0) Disabled -120 to -20 dBm	-90 dBm	Signal level threshold at which a mobile on one of the donor voice channels becomes a candidate for boosting.
MULTI-DONOR ACTIVATION THRESHOLD	(0) Disabled -120 to -20 dBm (A) Always	Disabled	Signal level threshold at which a mobile being boosted becomes a candidate for hand-off to an alternate donor cell. (Applicable only if alternate donor cell has MDU installed.)
HAND-BACK THRESHOLD	(0) Disabled -120 to -20 dBm	-100 dBm	Signal level threshold at which a mobile being boosted becomes a candidate for returning to original donor voice channel.
HAND-IN MOBILE POWER STEP	0–7	0	Mobile attenuation code (VMAC) sent to a mobile being boosted to establish maximum mobile power level used in boosted coverage are. Power step 0 = full power (3 watts); each additional step = 4 dB decrease in power (i.e., step 7 = 28 dB below full power).
HAND-BACK MOBILE POWER STEP	0–7	0	Mobile attenuation code (VMAC) sent to a mobile during a hand-back attempt. This establishes the power level of the mobiles in the donor coverage area that have driven from the booster area with calls in progress. (Same power step equivalents as above.)
RSSI AVERAGING SPEED	Slow Medium Fast	Medium	Averaging speed for determining when mobiles become candidates for hand-in or hand-back.
DELAY BETWEEN HAND-IN ATTEMPTS	0–250 seconds	5 seconds	Amount of time between hand-in attempts on a mobile identified as a candidate for boosting (signal exceeds hand-in threshold).
STATION POWER CLASS SELECTIVE BOOSTING	Boost all Boost I–III Boost I, II Boost I	Boost all	Allows the EAC-2000 to be configured to boost only lower-power subscriber units (i.e., portables).

Continued . . .

Figure 2-4. System Parameters (Continued)

Parameters	Options	Default	Description
Disconnect Control Menu			
DONOR RSSI	(0) Disabled -100 to -20 dBm	-80 dBm	Threshold below which the EAC-2000 will disconnect a call.
SAT FADE TIME-OUT	0–250 seconds	5 seconds	Time period the system will wait before terminating an established call when the proper SAT is not detected from a mobile. (Does not apply if the mobile sends a release or the mobile's signal strength falls below the hand-back threshold.)
MAX NUMBER OF HAND-BACK ATTEMPTS PER CALL	0–250	10	Maximum number of hand-back attempts made on mobiles identified as candidates for hand-back (signal below hand-back threshold). If hand-back is not successful before this number is reached, the booster assumes the mobile is driving away from the donor cell site and maintains the call as long as possible.
MINIMUM DELAY BETWEEN HAND-BACK ATTEMPTS	0–250 seconds	15 seconds	Time between attempts to return the mobile to the donor channel when it is below the hand-back threshold.
Call Processing Parameters Menu			
MOBILE RSSI > THRESHOLD PARAMETERS	C1	C1	Conditions for handling mobiles that are above the hand-in threshold.
HAND-BACK/ GRAB-BACK CONTROL	D1 D2	D1	Conditions under which mobile hand-back confirmation is treated.
RECOMMENDATIONS			On-line recommendations.

Figure 2-5. Alarm Parameters

Parameter	Options	Default	Description
ANTENNA RETURN LOSS - LOW ALARM POINT	0 (Disabled) 1–20	6 dB	Define antenna return loss alarm threshold.
PA TO ANTENNA LOSS - HIGH ALARM POINT		9 dB	Define PA to antenna loss threshold.
PA TEMP - HIGH ALARM POINT	0 (Disabled) 1–100° C	90° C	Defines PA temperature alarm condition.
PA TEMP - FAN ACTIVATION POINT		60° C	Defines PA temperature that turns heat exchanger fan on.
PA TEMP - PA POWER CUTBACK POINT		90° C	Define parameters for forward dynamic power control.
MOBILE POWER CONTROL CAUSES PA POWER CUTBACK	Enabled Disabled	Disabled	
+28 VOLT SUPPLY - PA POWER CUTBACK POINT	0 (Disabled) .1–50.9 Volts	23.0 Volts	
+28 VOLT SUPPLY - LOW ALARM POINT			Alarm thresholds for power supply voltages
+12 VOLT SUPPLY - LOW ALARM POINT	0 (Disabled) .1–14.9 Volts	10.0 Volts	
+6 VOLT SUPPLY - LOW ALARM POINT	0 (Dsiabled) .1–9.9 Volts	5.4 Volts	
EXTERNAL DIGITAL INPUT ALARM STATE (For each of 8 inputs)	(0) Disabled (1) High (2) Low	Disabled	Defines alarm conditions on the eight general purpose inputs.
EXTERNAL DIGITAL OUTPUT CURRENT STATE (For 8 inputs)	(1) High (2) Low (3) High if alarm. . . (4) Low if alarm. . .	Low	Defines state of the eight general purpose outputs.
EXTERNAL ANALOG INPUTS - ALARM THRESHOLD	0-5 volts	0.0 Vdc	Defines alarm condition on the eight analog inputs.
EXTERNAL ANALOG INPUT - ALARM STATE	(0) Disabled (1) Above threshold (2) Below threshold	Disabled	Defines alarm conditions on the eight analog inputs.

Continued. . .

Figure 2-5. Alarm Parameters (Continued)

Parameter	Options	Default	Description
CRITICAL ALARMS:	Log only or Critical		"Log only" alarm occurrences will be logged; total number of occurrences can be viewed using the ALA command. "Critical" alarms will not only be logged, but also cause the auto-dial sequence to begin (if enabled). This sequence automatically dials a designated number to report the alarm.
Board Out-of-Service Alarm		Critical	
Board ROM Alarm		Critical	
Board Calibration Memory Alarm		Critical	
Serial Data Link Alarm		Critical	
Personality Mismatch Alarm		Critical	
Synthesizer Unlocked Alarm		Critical	
Reverse PA Power Low Alarm		Critical	
RSSI Alarm		Log Only	
PA Out-of-Service Alarm		Critical	
PA Temp - High Alarm		Log only	
PA Temp - Low Alarm		Critical	
PA to Antenna High Loss Alarm		Critical	
Antenna Return Loss Alarm		Critical	
ROM Alarm		Critical	
RAM Alarm		Critical	
NOVRAM Alarm		Critical	
SAT Detector Alarm		Critical	
Power Supply Voltages - Low Alarm		Critical	
External Analog Input Alarm		Log Only	
External Digital Input - Alarms		Log Only	
RSSI ALARMS:	(0) Disabled		Establishes alarm levels for these signals.
Donor Ctrl Chan RSSI Hi Alarm Pt.	-100 to -20 dBm	Disabled	
Donor Ctrl Chan RSSI Low Alarm Pt.		-80 dBm	
Donor Voice Chan RSSI Hi Alarm Pt.		Disabled	

2.2 Main Menu

Entry: At the > prompt, type **SET**.

Menu:

```
A  RF Boards
B  Power Amplifiers
C  System Parameters
D  Alarms
E  Set Defaults
```

Purpose: Gives access to setup menus.

2.3 RF Boards Menu

Entry:

Main Menu ⇒ A <CR>

Menu:

		Defaults
1	Position 1	ENABLED
2	Position 2	ENABLED
3	Position 3	ENABLED
4	Position 4	ENABLED
5	Position 5	ENABLED
6	Position 6	ENABLED
7	Position 7	ENABLED
8	Position 8	ENABLED
9	Position 9	ENABLED
10	Position 10	ENABLED
11	Position 11	ENABLED

Purpose: Shows configuration (type and status) of the 11 RF board positions. From this menu each board can be selected to access the parameters for that board.

2.3 RF Boards Menu (Continued)

2.3.1 RF Board Position Menus

Entry:

Main Menu	⇒	RF Boards Menu	⇒	[Board No. 1–11] <CR>

Menu:

		Default Values
A	Status	ENABLED
B	Diversity	OFF - ANTENNA "M1" SELECTED

Purpose: Gives access to status and diversity parameters.

STATUS

Entry:

Main Menu	⇒	RF Boards Menu	⇒	RF Board Position	⇒	A <CR>

Purpose: To set up the selected RF board.

Options:

- 0 DISABLED: Board ignored by system; not used for boosting; alarms not logged.
- 1 ENABLED: Reactivates board if it has been taken out of service due to an alarm. If alarm condition persists, board will go out of service again when SET is exited. (**Default setting**)
- 2 NONE: Same as DISABLED. Used to keep track of slots with no boards installed.

2.3.1 RF Board Position Menus (Continued)

DIVERSITY

Entry:

Main Menu ⇒ RF Boards Menu ⇒ RF Board Position ⇒ B <CR>

Purpose: To turn diversity function on or off for reverse paths. Diversity enables the board to select the best signal between two receive antenna ports, to improve voice channel performance.

Options:

- 1 DIVERSITY ON: Default for boards 2-5 and 7–11. Not allowed for board 6.
- 2 OFF—ANTENNA M1 ONLY SELECTED: Positions 1 and 6 default.
- 3 OFF—ANTENNA M2 ONLY SELECTED

2.4 Power Amplifiers Menu

Entry:

Main Menu ⇒ B <CR>

Menu:

Power Amplifiers Menu

		Default Values
A	Forward PA Power Step - Voice	0
B	Forward PA Power Step - Control	0
C	Forward PA Power Step - Hand-off	0
D	Forward PA Power Low Alarm Point - Voice	+40 dBm
E	Forward PA Power Low Alarm Point - Control	+40 dBm
F	Forward PA Power Low Alarm Point - Hand-off	+40 dBm
G	Reverse PA Power Set - Voice	+20 dBm
H	Reverse PA Power Set - Control	+20 dBm
I	Reverse PA Power Low Alarm Point - Voice	+15 dBm
J	Reverse PA Power Low Alarm Point - Control	+15 dBm
K	Key Forward PA	POWER ADJ/COMBINER TUNING
L	Key Reverse PA	POWER MEASUREMENT

Purpose: Shows configuration of the PAs.

2.4 Power Amplifiers Menu (Continued)

FORWARD PA POWER STEP - VOICE
FORWARD PA POWER STEP - CONTROL
FORWARD PA POWER STEP - HAND-OFF

Entry:

Main Menu ⇒ Power Amplifiers Menu ⇒ A, B, or C <CR>

Purpose: These three parameters are used to select the power step for:
- Voice channel PAs
- Control channel PA
- Hand-off PA

Options:
- Steps: 0–3
  –0 is full power (45 watts); each step is a 4 dB decrease in power.
- Default: 0

FORWARD PA POWER LOW ALARM POINT - VOICE
FORWARD PA POWER LOW ALARM POINT - CONTROL
FORWARD PA POWER LOW ALARM POINT - HAND-OFF

Entry:

Main Menu ⇒ Power Amplifiers Menu ⇒ D, E, or F <CR>

Purpose: These three parameters are used to set low power alarm threshold for forward voice PAs. Should be 5 to 6 dB below power read using "key forward." Voice PA alarms cause the PA to be taken out of service and hand-off PA alarms to be logged, but the PA remains in service. If the Backup Control Channel option (see Sec. 2.5.2) is enabled, a low PA power on the control channel will cause out-of-service for that PA.

Options:
- Range: 0, 30–50
- Default: +40 dBm

REVERSE PA POWER SET - VOICE
REVERSE PA POWER SET - CONTROL

Entry:

Main Menu ⇒ Power Amplifiers Menu ⇒ G or H <CR>

Purpose: These two parameters are used to select power level for reverse PAs.

Options:
- Range: +5 to +20 dBm
- Default: +20 dBm

2.4 Power Amplifiers Menu (Continued)

REVERSE PA POWER LOW ALARM POINT - VOICE
REVERSE PA POWER LOW ALARM POINT - CONTROL

Entry:

Main Menu ⇒ Power Amplifiers Menu ⇒ I or J <CR>

Purpose: These two parameters are used to set low power alarm threshold for reverse PAs. Should be 5 dB below power read using "key reverse."

Options:
- Range: 0, 1–23
- Default: +15 dBm

KEY FORWARD PA

Entry:

Main Menu ⇒ Power Amplifiers Menu ⇒ K <CR>

Purpose: To key forward PA.

Options:
- PAs 1–11; position of PA to key. Keys PA on boosted channel at step as entered in A, B and C. Displays position channel number and continuously updated PA power reading at PA output.

KEY REVERSE PA

Entry:

Main Menu ⇒ Power Amplifiers Menu ⇒ L <CR>

Purpose: Keys reverse PA for reverse power monitoring. Output channel is 10 channels below boosted channel. Ouput level is as defined in J and K.

Note: Board 6 uses the "CNTL" setting.

2.5 System Parameters Menu

Entry:

Main Menu ⇒ C <CR>

Menu:

A Site ID	Identification	Multi-Hop	
B Control Channels .	Donor	Boosted	State
C Voice Channels . . .	Donor	Donor SAT	Boosted
D Modem Control . . .	Passwords	Console Time-out	
	Auto-dial Control		
	Dial-up Phone	Modem Mobile	
E Thresholds	Hand-in	Hand-back	Multi-Donor
	Mobile Power	RSSI Averaging	Hand-in Delay
F Disconnect Control	Donor RSSI	SAT Fade Time-out	
	Hand-back Delay	Hand-back Attempts	
G Call Processing . . .	Mobile Orig	Mobile Answer	
	RSSI > Thresh	Hand-back / Grab-back	

Purpose: Displays parameters associated with overall system.

2.5.1 Site ID Menu

Entry:

Main Menu ⇒ System Parameters Menu ⇒ A <CR>

Menu:

Site ID Menu

		Default Values
A	Site Identification	Not Assigned
B	Multi-hop Feature	DISABLED

Purpose: Gives access to parameters associated with site ID.

2.5.1 Site ID Menu (Continued)

SITE IDENTIFICATION

Entry:

Main Menu ⇒ Sys. Par. Menu ⇒ Site ID Menu ⇒ A <CR>

Purpose: To assign/modify a name that uniquely identifies the site. Name appears on console when the remote/local link is established to identify the site with which the user is communicating.

Options:
- Allowable entries: Any string of up to 20 characters
- Default: Not assigned

MULTI-HOP FEATURE

Entry:

Main Menu ⇒ Sys. Par. Menu ⇒ Site ID Menu ⇒ B <CR>

Purpose: To turn the Multi-hop feature on or off.

Options:
- 0= DISABLED: Default setting; causes conventional stand-alone operation.
- 1= ENABLED - MODE 1 - ADJACENT TO DONOR
- 2= ENABLED - MODE 2 - ADJACENT TO AN EAC-2000
- 3= ENABLED - MODE 3 - ADJACENT TO AN EAC-IV (NO PRIOR EAC-2000 IN CHAIN)
- 4= ENABLED - MODE 4 - ADJACENT TO AN EAC-IV (WITH PRIOR EAC-2000 IN CHAIN)

☞ **NOTE:** The EAC-2000 may be used in a Multi-hop configuration with other EAC-2000s and/or Extend-A-Cell® IVs. The type of units between the EAC-2000 and the donor will determine how this option should be set.

2.5.2 Control Channels Menu

Entry:

Main Menu ⇒ System Parameters Menu ⇒ B <CR>

Menu:

Control Channels Menu

A	Donor Control Channel	337
B	Boosted Control Channel	340
C	RF Board to Use for Control Channel	1
D	Control Channel State During "All Channels Busy	DIRECTED RETRY
E	Directed Retry Channels	LIST
F	Back-up Control Channel Option	DISABLED
G	Revertive Control Channel Option	DISABLED
H	Substitute Control Channel	DISABLED
I	Booster Link Channel	550
J	Booster Link Channel - Previous EAC	571

NOTE: Selection H appears only if Selection F or G is set to ENABLED. Selection I appears only if the Multi-Donor Threshold is not DISABLED. Selection J appears only if the Multi-hop Feature is set to Mode 3 or Mode 4.

Purpose: Gives access to donor and boosted control channels, for entering channel numbers.

DONOR CONTROL CHANNEL

Entry:

Main Menu ⇒ Sys. Par. Menu ⇒ Control Channels Menu ⇒ A <CR>

Purpose: To establish the donor control channel number.

Options:
- Allowable range: 1–799, 991–1023
- Default: 337

2.5.2 Control Channels Menu (Continued)

BOOSTED CONTROL CHANNEL

Entry:

Main Menu ⇒ Sys. Par. Menu ⇒ Control Channels Menu ⇒ B <CR>

Purpose: To establish the boosted control channel number. This is the channel to which combiner port 1 is tuned. Any changes to this parameter will necessitate retuning the combiner.

Options:
- Allowable range: 1–799, 991–1023
- Default: 340

RF BOARD TO USE FOR CONTROL CHANNEL

Entry:

Main Menu ⇒ Sys. Par. Menu ⇒ Control Channels Menu ⇒ C <CR>

Purpose: To assign one of the RF boards to boost the control channel.

Options:
- 0 VOICE CHANNELS ONLY: All channels will operate as voice channels only. Appropriate only in a multi-cabinet configuration of EAC-2000s for the units not boosting the control channel. (Presumably, another EAC-2000 would be set up to boost the control channel.)
- 1–11 CORRESPONDING RF BOARD POSITION: Allows assignment of one of the RF boards (except board 6) to boost the control channel. The associated combiner port should be tuned to the Boosted Control Channel.
- Default: 1

2.5.2 Control Channels Menu (Continued)

CONTROL CHANNEL STATE DURING "ALL CHANNELS BUSY"

Entry:

Main Menu ⇒ Sys. Par. Menu ⇒ Control Channels Menu ⇒ D <CR>

Purpose: To establish the state of the boosted control channel when all boosted voice channels are occupied.

Options:

- OFF: The best option for installations where there is no competing service. Boosted control channel will be taken down during periods when no voice channels are available for processing new calls. When the EAC-2000 becomes busy, mobiles that are in the boosted coverage area (but not on a call) will rescan and lock onto another control channel (possibly a competitor's).

- BOOST ACCESSES: Use only if there is good coverage from the donor cell in the booster coverage area. The boosted control channel will stay up when all boosted voice channels are busy. Mobiles in the coverage area will remain locked to the boosted control channel. If a call is attempted while the EAC-2000 is busy, the call setup transmissions on the control channel will be boosted. However, the EAC-2000 will not boost the call on the voice channel, and the mobile will be left on the original-donor-assigned voice channel. Thus the call will be set up but, if the mobile is unable to communicate with the donor directly, the call will drop.

- DENY ACCESSES: Forward boosted control channel will stay up, but the reverse control boost path will be disabled. Therefore mobiles in the booster coverage area will remain locked to the boosted control channel, but if they try to place or answer a call they will be unable to signal back to the donor on the reverse control channel. Mobiles' attempted call will result in "fast busy" (reorder) at the mobile within about 1 second. Calls to a mobile in a busy EAC-2000 coverage area will result in a "mobile not in service area" message to the calling party.

- DENY ACCESSES, BUT COUNT: This is similar to "Deny Access"; the mobile is allowed to access the EAC-2000, but the access is not repeated. This allows the call attempt to be logged. Mobile calls will result in fast busy after about 5 seconds.

- DIRECTED RETRY: **Default setting.** Probably the best option for installations where a competitive system exists. When the EAC-2000 is busy, the boosted channel stays on the air. If more accesses or page responses come in, the EAC-2000 sends the mobile a special "directed retry" message. This message gives the mobile a list of up to six other control channels on which to attempt the access. These directed retry channels can be set by the user.

2.5.2 Control Channels Menu (Continued)

DIRECTED RETRY CHANNELS

Entry:

Main Menu ⇒ Sys. Par. Menu ⇒ Control Channels Menu ⇒ E <CR>

Purpose: If the control channel state is set to this mode, this list of six channels will be sent to the mobile in the directed retry message. The mobile will scan this set of channels and will try its access on the strongest of the six channels. The donor control channel and the control channel of cells adjacent to the boosted coverage should be entered.

☞ **NOTE:** The boosted control channel must not be in this list.

Options:
- Any valid channel
- Default: All disabled

BACK-UP CONTROL CHANNEL OPTION

Entry:

Main Menu ⇒ Sys. Par. Menu ⇒ Control Channels Menu ⇒ F <CR>

Purpose: If enabled, board 6 will be used to boost the control channel if the normal control channel board is disabled, either by the user or by an alarm. Boosted channel will be the "Substitute Control Channel."

Options:
- Enabled
- Disabled (default)

2.5.2 Control Channels Menu (Continued)

REVERTIVE CONTROL CHANNEL OPTION

Entry:

Main Menu ⇒ Sys. Par. Menu ⇒ Control Channels Menu ⇒ G <CR>

Purpose: If enabled, board 1, or whichever board is assigned to boost the control channel, will be used to boost the last call.

Options:
- Enabled
- Disabled (default)

SUBSTITUTE CONTROL CHANNEL

Entry:

Main Menu ⇒ Sys. Par. Menu ⇒ Control Channels Menu ⇒ H <CR>

Purpose: To assign a control channel for use by board 6 when the control channel equipment is disabled or is being used to boost the last voice call

Options:
- DISABLED: **Default setting.**
- Allowable range: 1–799, 991–1023

  Use board 6 to boost the control channel onto the channel chosen in the following situations:

- if the revertive control channel feature is enabled and the control channel equipment is used to boost the last call; or

- if the backup control channel feature is enabled and the control channel equipment is disabled (i.e., due to low PA power).

The substitute control channel number must be from the set of dedicated control channels. The substitute control channel must be separated from the donor control channel by at least three channels (90 kHz). If the revertive control channel option is enabled, the substitute control channel must also be separated from the boosted control channel by at least three channels (90 kHz).

If the revertive control channel option is disabled and the back-up control channel option is enabled, the substitute control channel may be the same as the boosted control channel. Since board 6 is used to transmit the substitute control channel and since its output is not combined, the combiner tuning is not affected by this channel choice.

2.5.2 Control Channels Menu (Continued)

NOTE: Interaction of Revertive Control Channel Option, Substitute Control Channel, and Boosted Control Channel State When All Channels Busy:

If the Revertive Control Channel Option is enabled, then "All Channels Busy" occurs when the control channel board is boosting the last call. Therefore, the "Boosted Cntl Channel State When All Channels Busy" actually applies to board 6 when it is acting as the substitute cntl channel.

For example, if "State" is set to *Disabled*, then board 6 will not be brought up as a substitute cntl channel even though it might otherwise be enabled. If "State" is set to *Directed Retry*, board 6 will be used to send those messages.

BOOSTER LINK CHANNEL

Entry:

Main Menu ⇒ Sys. Par. Menu ⇒ Control Channels Menu ⇒ I <CR>

Purpose: To identify the dedicated link channel used to signal between an EAC-2000 and any listening EAC-2000s or EAC-IVs in a Multi-hop configuration.

Options:
- Must be selected if:
  - Multi-hop Feature is enabled.
- Allowable range: 1–799, 991–1023

BOOSTER LINK CHANNEL—PREVIOUS EAC

Entry:

Main Menu ⇒ Sys. Par. Menu ⇒ Control Channels Menu ⇒ J <CR>

Purpose: Identifies the dedicated link channel used to receive call setup information from the previous EAC-IV in a Multi-hop configuration (only appears if Multi-hop feature is set to Mode 3 or 4).

Options:
- Allowable range: 1–799, 991–1023
- Set parameter to channel assigned as booster link channel in the previous EAC-IV in a Multi-hop chain.

2.5.3 Voice Channels Menu

Entry:

Main Menu ⇒ System Parameters Menu ⇒ C <CR>

Menu:

Voice Channels Menu

		Default Values
A	Donor Voice Channels (5970 Hz SAT)	List
B	Donor Voice Channels (6000 Hz SAT)	List
C	Donor Voice Channels (6030 Hz SAT)	List
M	Donor Voice Channels (Multiple SAT)	List
2	Boosted Voice Channel Position 2	361
3	Boosted Voice Channel Position 3	382
4	Boosted Voice Channel Position 4	403
5	Boosted Voice Channel Position 5	424
7	Boosted Voice Channel Position 7	445
8	Boosted Voice Channel Position 8	466
9	Boosted Voice Channel Position 9	487
10	Boosted Voice Channel Position 10	508
11	Boosted Voice Channel Position 11	529

NOTE: Selection 1, Boosted Voice Channel 1, is displayed only if the "Voice Channels Only" state is selected for "RF Board to Use for Control Channel" on Control Channel Menu..

Purpose: Gives access to donor voice channel lists and boosted voice channels.

2.5.3 Voice Channels Menu (Continued)

DONOR VOICE CHANNEL LISTS (5970–6030 Hz SAT)

Entry:

Main Menu ⇒ Sys. Par. Menu ⇒ Voice Channels Menu ⇒ A, B, or C <CR>

Purpose: To display/change the list of donor voice channels, for the corresponding SAT, which are scanned for mobile candidates to boost. When scanned, a candidate is verified as having the correct SAT before being boosted. Once the call is set up, the appropriate SAT is monitored.

Allowable Range:

- 1–799, 991–1023

Making Entries:

- Enter a given channel in only one list.
- Entering channels in lists:
  - To add a channel: enter **A** [channel number] **<CR>**.
  - To add 15 channels spaced 48 channels apart, precede channel number with **+**. Remove unwanted channels.
  - To remove a channel, enter **R** [channel number] **<CR>**.
  - To add/remove multiple channels: enter **A** (add) or **R** (remove) [multiple channel numbers separated by commas or spaces] **<CR>**.
- To change the SAT of a given channel, remove the channel from the old SAT list, then add the channel to the new SAT list.

2.5.3 Voice Channels Menu (Continued)

DONOR VOICE CHANNELS LIST (Multiple SAT)

Entry:

Main Menu ⇒ Sys. Par. Menu ⇒ Voice Channels Menu ⇒ M <CR>

Purpose: To display and/or change the list of donor voice channels for use in a Multi-hop. This parameter is needed when a call may be boosted on various boosted channels (with different SATs) of the previous EAC-2000, depending on which donor originally set up the call.

Enter channels in this list ONLY when—

- The EAC-2000 is one of the Multi-hop units (not adjacent to primary donor cell).
- One of the previous EAC-2000s in the chain has multiple possible donors.

BOOSTED VOICE CHANNEL POSITIONS 2–5, 7–11

Entry:

Main Menu ⇒ Sys. Par. Menu ⇒ Voice Channels Menu ⇒ Pos. 2-5, 7-11 <CR>

Purpose: To assign boosted voice channels.

Options:

- Allowable range: 1–799, 991–1023

NOTE:

- "Boosted voice channel 1" appears if RF board to use for control channel is set to 0.
- When boosted voice channels 2–5 and 7–11 are entered, the associated combiners must be retuned.

2.5.4 Modem Control Menu

Entry:

Main Menu ⇒ System Parameters Menu ⇒ D <CR>

Menu:

Modem Control Menu

		Default Values
A	Master Password	1234
B	Restricted Password	5678
C	Console Time-out	30 (x 10 Sec)
D	Auto-dial Enable	DISARMED
E	Dial-up Phone Number 1	12163498684
F	Dial-up Phone Number 2	NONE
G	Auto-dial Trials Max	10
H	Delay Between Auto-dial Retries	6 (x 10 Sec)
I	Max Auto-dial Trial Period	9 (x 10 Sec)
J	Modem Setup	PARAMETERS
K	Modem Mobile MIN	1234567890
L	Modem Mobile Power Step	7

Purpose: Gives access to parameters associated with EAC-2000's remote link modem.

MASTER PASSWORD

Entry:

Main Menu ⇒ Sys. Par. Menu ⇒ Modem Control Menu ⇒ A <CR>

Purpose: To assign a master password unique to the site. When entered in response to a password prompt, it unlocks the console unconditionally and allows access to all system setup and monitor commands.

Options:
- Allowable entries: Any string of up to 12 characters
- Default: 1234

2.5.4 Modem Control Menu (Continued)

RESTRICTED PASSWORD

Entry:

Main Menu ⇒ Sys. Par. Menu ⇒ Modem Control Menu ⇒ B <CR>

Purpose: To assign a unique restricted password for the site. When entered in response to a password prompt, it unlocks the console but only allows the user access to the following system monitoring commands: ALA, HEL, LOC, RSS, SSS, DCH, DCS, SSR, and SCS.

Options:
- Allowable entries: Any string of up to 12 characters
- Default: 5678

CONSOLE TIME-OUT

Entry:

Main Menu ⇒ Sys. Par. Menu ⇒ Modem Control Menu ⇒ C <CR>

Purpose: To set the maximum time the console will wait before locking during periods of no keyboard activity.

Options:
- Displayed in multiples of 10 seconds
- Allowable range: 1–250 (10–2500 seconds)
- Default: 30 (300 seconds, or 5 minutes)

AUTO-DIAL ENABLE

Entry:

Main Menu ⇒ Sys. Par. Menu ⇒ Modem Control Menu ⇒ D <CR>

Purpose: To arm/disarm the modem's ability to automatically dial a designated telephone number when critical alarms exist.

Options:
- ARMED
- DISARMED (default)

NOTE: This function automatically disarms after a successful auto-dial (to prevent duplicate alarm reporting) or after the designated maximum number of auto-dial trials have been made without a successful connection.

2.5.4 Modem Control Menu (Continued)

DIAL-UP PHONE NUMBERS (1 AND 2)

Entry:

Main Menu ⇒ Sys. Par. Menu ⇒ Modem Control Menu ⇒ E & F <CR>

Purpose: To assign numbers to be dialed by the EAC-2000 when a critical alarm condition occurs. The second dial-up phone number is typically used to alert a different location.

☞ **NOTE:** If both numbers are entered, the EAC-2000 will alternately dial both until a successful connection is made and a report is transmitted. The EAC-2000 will continue dialing until a successful connection is made and a report is transmitted to both numbers.

Options:

- Allowable entries: Any string of up to 48 characters. The following special entries allow user to specify non-displayable characters and EAC delays in string:

~	causes EAC to delay .5 seconds
!	causes EAC to send an ASCII 0D hex (carriage return)
^@-^_	causes EAC to send non-displayable control characters
^1-^9	causes EAC to delay 1–9 seconds
^~	causes EAC to send an ASCII 7E hex ("~" character)
^!	causes EAC to send an ASCII 21 hex ("!" character)
^^	causes EAC to send an ASCII 5E hex ("^" character)

☞ **NOTE:** This allows any ASCII character 1–7E to be specified.

- Default:
  –Dial-Up Phone #1: 12163498684 (Allen Telecom Systems, Systems Engineering Department)
  –Dial-Up Phone #2: None

2.5.4 Modem Control Menu (Continued)

DIAL-UP PHONE NUMBERS (1 AND 2) (Continued)

EAC delays (specified by ~ and ^1 – ^9) cause the EAC to delay the specified time before sending more characters (no characters are sent to the modem during the delay time). This is not to be confused with "modem" delay characters, which are actually sent to the modem, where the delay occurs. Hayes compatible uses "," to specify a "pause" delay, which defaults to 2 seconds.

For example—

- Use ~ to give the modem time to process a command string; i.e., the ~ in "~~~+++~~~ATH0!", the default hang-up string, specifies the 1.5 second delay before and after the "+++" needed to guarantee a modem will enter "command" mode.

- Use "," to specify dialing delays; i.e., in a dial string, "5493857,,,,1234" specifies that the modem should dial 5493857, delay 8 seconds, then dial 1234. This might be used to dial a number, wait for an answer, then overdial more digits (for example, a paging service).

AUTO-DIAL TRIALS MAX

Entry:

Main Menu ⇒ Sys. Par. Menu ⇒ Modem Control Menu ⇒ G <CR>

Purpose: To set the maximum number of auto-dial trials the modem will attempt if there are critical alarms to be reported and a connection cannot be made.

Options:
- Allowable range: 0–10 attempts
- Default: 10 attempts

2.5.4 Modem Control Menu (Continued)

DELAY BETWEEN AUTO-DIAL RETRIES

Entry:

Main Menu ⇒ Sys. Par. Menu ⇒ Modem Control Menu ⇒ H <CR>

Purpose: To set the length of time the modem will wait after an unanswered auto-dial call (critical alarm report) before trying again.

Options:
- Displayed in multiples of 10 seconds
- Allowable range: 0–250 (0–2500 seconds)
- Default: 6 (60 seconds)

MAX AUTO-DIAL TRIAL PERIOD

Entry:

Main Menu ⇒ Sys. Par. Menu ⇒ Modem Control Menu ⇒ I <CR>

Purpose: To set the maximum length of time the modem will wait before disconnecting an unanswered auto-dial call.

Options:
- Displayed in multiples of 10 seconds
- Allowable range: 0–250 (0–2500 seconds)
- Default: 6 (60 seconds)

2.5.4 Modem Control Menu (Continued)

MODEM SETUP

Entry:

Main Menu ⇒ Sys. Par. Menu ⇒ Modem Control Menu ⇒ J <CR>

Menu:

Modem Setup

		Default Values
A	Init String	AT!~AT!~AT&FX0E0\D2S0=1S10=20)M1:E0*H1!
B	Dial Prefix String	ATDT
C	Hangup String	~~~+++~~~ATH0!
D	Local Port Baud Rate	9600
E	Local Port Comm Params	7 data, EVEN tx parity, IGNORE rx parity, 1 stop
F	Remote Port Baud Rate	9600
G	Remote Port Comm Params	7 data, EVEN tx parity, CHECK rx parity, 1 stop
H	Remote Port Handshake	CTS/RTS

Purpose: Gives access to parameters associated with setting up the modem.

INIT STRING

Entry:

Main Menu ⇒ Sys. Par. Menu ⇒ Modem Control Menu ⇒ Modem Setup Menu ⇒ A <CR>

Purpose: To specify the string used to initialize the modem. This string is sent at power-up and after LOC or console timeout; changes will be effective for the next session.

Options:

- Allowable entries: Any string of up to 48 characters.
- The following special entries allow the user to specify nondisplayable characters and EAC delays in a string:

~	causes EAC to delay .5 seconds
!	causes EAC to send and ASCII 0D hex (carriage return)
^@ to ^_	causes EAC to send non-displayable control characters
^1 to ^9	causes EAC to delay 1–9 seconds
^~	causes EAC to send an ASCII 7E hex ("~" character)
^!	causes EAC to send an ASCII 21 hex ("!" character)
^^	causes EAC to send an ASCII 5E hex ("^" character)

2.5.4 Modem Control Menu (Continued)

INIT STRING (Continued)

- Default string: AT!~AT!~AT&FX0E0\D2S0=1S10=20)M1:E0*H1!

  Descriptions of default string elements:

AT!~AT!~	Sends "AT" carriage return, delays .5 seconds, then sends it again. This allows modem two chances to auto baud.
AT&F	Causes modem to set factory defaults.
X0E0	Causes modem to use standard result codes, no echo in command mode, both required by EAC-2000 interface software.
\D2	Causes modem CTS to be inactive when no carrier is detected; CTS is used as handshake during connection.
S0=1	Causes modem to auto-answer after one ring.
S10=20	Causes modem carrier timeout to be 2 seconds. Default timeout of 6 seconds falses with modem mobile supplied dial tone.
)M1:E0*H1!	This is the setup string recommended by Microcomm for modems connected to cellular mobile, with these exceptions: - /N3 not specified (so still can dial with an older modem) - @M18 not specified (because modem mobile works better at default level)

DIAL PREFIX STRING

Entry:

Main Menu ⇒ Sys. Par. Menu ⇒ Modem Control Menu ⇒ Modem Setup Menu ⇒ B <CR>

Purpose: To specify the string sent to the modem before the dial strings. Allows modem to be set up differently for answer than for originate.

Options:
- Allowable entries: Any string of up to 16 characters.
- Special entries to specify EAC delays and nondisplayable characters are the same as listed under INIT STRING.
- Default: ATDT

2.5.4 Modem Control Menu (Continued)

HANG UP STRING

Entry:

Main Menu ⇒ Sys. Par. Menu ⇒ Modem Control Menu ⇒ Modem Setup Menu ⇒ **C <CR>**

Purpose: To specify the string sent to the modem after LOC or console timeout to cause the connection to end.

Options:

- Allowable entries: Any string of up to 16 characters.
- Special entries to specify EAC delays and nondisplayable characters are the same as listed under INIT STRING.
- Default: ~~~+++~~~ATHO!
  (Hayes compatible modems enter command mode if they receive +++ without receiving any other characters 1.5 seconds before or after the plusses. *ATHO!* causes the modem to hang up.)

LOCAL PORT BAUD RATE

Entry:

Main Menu ⇒ Sys. Par. Menu ⇒ Modem Control Menu ⇒ Modem Setup Menu ⇒ D <CR>

Purpose: To specify the baud rate used for the local port. This rate should be kept higher than or equal to the remote baud rate. The EAC-2000 software maximum transmit rate is about 1 character per millisecond, so effective throughput does not increase beyond 9600. Changes for this parameter will take effect after a LOC or reset (i.e., during the next session).

Options:

- Allowable entries: 150, 300, 600, 1200, 2400, 4800, 9600, 19200
- Default: 9600

NOTE:

- If the password bypass switch (see Volume 2, Section 1.2.1) is enabled when the EAC-2000 is *LOC*ed or reset, the local port operates at the default baud rate.

- For some older revision controller boards, 2400 is the maximum baud rate supported. If this is the case, the displayed options list will not include 4800, 9600, or 19200, and the default will be 2400. (The software automatically determines the controller board revision.)

2.5.4 Modem Control Menu (Continued)

LOCAL PORT COMM PARAMS

Entry:

Main Menu ⇒ Sys. Par. Menu ⇒ Modem Control Menu ⇒ Modem Setup Menu ⇒ E <CR>

Purpose: To specify parameters for the local communications port, including number of data bits, parity, and number of stop bits. The two most commonly used combinations are *7 even 1 stop* and *8 no 1 stop*. Changes for this parameter will take effect after a LOC or reset (i.e., during the next session).

Options:

- Allowable entries:
  - Data bits: 7 or 8
  - Parity: Even, odd, mark, space, no transmit; check or ignore receive parity
  - Stop bits: 1 or 2
- Default: 7 data, EVEN tx parity, IGNORE rx parity, 1 stop

NOTE: If the password bypass switch (see Volume 2, Section 1.2.1) is enabled when the EAC-2000 is *LOC*ed or reset, the local port operates with the default comm parameters.

REMOTE PORT BAUD RATE

Entry:

Main Menu ⇒ Sys. Par. Menu ⇒ Modem Control Menu ⇒ Modem Setup Menu ⇒ F <CR>

Purpose: To specify the baud rate used for the connection to the modem. Changes for this parameter will take effect after a LOC or reset (i.e., during the next session).

This rate represents a maximum for the actual modem-to-modem link rate. For example, with the remote port baud rate set to 9600, the Microcom modem can connect at any standard rate less than or equal to 9600. The actual connection rate is automatically determined by the modems according to capabilities of each and the quality of the connection.

This parameter provides an easy way to force the modem to use a lower baud rate (e.g., 2400 or 4800). If the EAC-2000 is dialed up with another high speed modem, the modems tend to be optimistic in their initial determination of rate and, if possible, connect at 7200 or even 9600. However, the cellular link may not support these speeds very well, and the modems spend most of their time retransmitting messages due to link errors.

2.5.4 Modem Control Menu (Continued)

In these cases, higher throughput may be achieved if the remote port baud rate is set to 4800 or 2400. Another way to limit the connection rate is to dial (or answer) the modem with ah high speed modem whose serial rate is set to 4800 or 2400.

Options:
- Allowable entries: 150, 300, 600, 1200, 2400, 4800, 9600, 19200
- Default: 9600

NOTE: For some older revision controller boards, the maximum baud rate supported is 2400. If this is the case, the displayed options list will not include 4800, 9600, or 19200, and the default will be 2400. (The software automatically determines the controller board revision.)

REMOTE PORT COMM PARAMS

Entry:

Main Menu ⇒ Sys. Par. Menu ⇒ Modem Control Menu ⇒ Modem Setup Menu ⇒ G <CR>

Purpose: To specify parameters for the local communications port, including number of data bits, parity, and number of stop bits. The two most commonly used combinations are *7 even 1 stop* and *8 no 1 stop*. Changes for this parameter will take effect after a LOC or reset (i.e., during the next session).

Options:
- Allowable entries:
  - Data bits: 7 or 8
  - Parity: Even, odd, mark, space, no transmit; check or ignore receive parity
  - Stop bits: 1 or 2
- Default: 7 data, EVEN tx parity, CHECK rx parity, 1 stop

2.5.4 Modem Control Menu (Continued)

REMOTE PORT HANDSHAKE

Entry:

Main Menu ⇒ Sys. Par. Menu ⇒ Modem Control Menu ⇒ Modem Setup Menu ⇒ H <CR>

Purpose: To specify the mechanism for handshaking on the remote port. Handshaking (i.e., the mechanism the modem uses to stop and start character flow from the EAC-2000) is required in two situations:

(1) For "reliable" connections, the modem may have to stop character flow when link errors occur. For reliable links, the modem automatically retransmits character blocks until the receiving modem indicates the data was received with no error.

(2) Often the connection rate is lower than the modem port rate. In fact, it is desirable to set the modem port rate as high as the highest desired connection rate, so that the modem port is not the limiting link.

Changes to this parameter will take effect after a *loc* or reset (i.e., during the next session).

Options:
- Allowable entries: None, Xon/Xoff, CTS/RTS
- Default: CTS/RTS

NOTE: The default init strings for the modems include commands that cause them to operate with CTS/RTS handshaking.

MODEM MOBILE MIN

Entry:

Main Menu ⇒ Sys. Par. Menu ⇒ Modem Control Menu ⇒ K <CR>

Purpose: To enter the Mobile Identification Number (MIN) of the cellular mobile used to establish the remote control link in the booster. The booster uses the MIN to trap calls to and from the modem mobile and forces them to stay on the donor voice channel and not occupy a boosted voice channel.

Options:
- Allowable entries: String of any 10 digits
- Default: 1234567890

2.5.4 Modem Control Menu (Continued)

MODEM MOBILE POWER STEP

Entry:

Main Menu ⇒ Sys. Par. Menu ⇒ Modem Control Menu ⇒ L <CR>

Purpose: To set the mobile attenuation code (VMAC) for the mobile used to establish the remote link. Modem mobile power should be kept as low as possible to minimize front-end overload in the booster receivers.

Options:

- Allowable range: 0–7
  - 0 = full power (3 watts)
  - Each step corresponds to a 4 dB decrease in power (7 = 28 dB below full power)
- Default: 7

2.5.5 Thresholds and Power Control Menu

Entry:

Main Menu ⇒ System Parameters Menu ⇒ E <CR>

Menu:

Thresholds and Power Control Menu

		Default Values
A	Mobile Dynamic Power Control Threshold	-60 dBm
B	Hand-in Threshold	-90 dBm
C	Multi-Donor Activation Threshold	DISABLED
D	Hand-back Threshold	-100 dBm
E	Hand-in Mobile Power Step	0
F	Hand-back Mobile Power Step	0
G	RSSI Averaging Speed	MEDIUM
H	Delay Between Hand-in Attempts	5 Sec
I	Station Power Class Selective Boosting	BOOST ALL POWER CLASSES

Purpose: Gives access to the parameters associated with the hand-off algorithm used by the EAC-2000.

☞ **NOTE:** The thresholds chosen for Selections A–D should be in descending order (i.e., **A** should always be higher than **B**, etc.), as illustrated above.

MOBILE DYNAMIC POWER CONTROL THRESHOLD

Entry:

Main Menu ⇒ Sys. Par. Menu ⇒ Thresholds and Power Control Menu ⇒ A <CR>

Purpose: To set the signal level threshold at which the EAC-2000 will reduce the power of the mobile.

Options:

- Allowable range: -120 dBm to -20 dBm
- Default: -60 dBm
- To disable: 0

NOTE: The EAC-2000 receivers have state-of-the-art intermod performance. Nevertheless, signal strengths above -60 dBm (which may occur if mobiles drive close to the booster location) may cause intermodulation interference to weak mobiles on the other booster channels. To handle this possibility, the EAC-2000 monitors the RSSIs on the reverse voice channels (i.e., from the boosted mobiles). If the RSSI exceeds the Mobile Dynamic Power Control Threshold, a power control message is sent to the mobile, causing it to lower its power output by 3 VMAC steps (12 dBm) from the current setting. This is triggered each time the threshold is exceeded.

2.5.5 Thresholds and Power Control Menu (Continued)

MOBILE DYNAMIC POWER CONTROL THRESHOLD (Continued)

For example, if a mobile running full power (VMAC = 0) comes close to the booster, the power will be cut back to VMAC = 3. If the mobile still exceeds the threshold, the power will be lowered to VMAC = 6, then finally to VMAC = 7 (the minimum power setting). If the RSSI from the mobile with VMAC = 7 exceeds the threshold, a Reverse Channel High RSSI Alarm will be logged.

Mobiles that have been powered down by the EAC-2000 will be powered up when the mobile RSSI decreases to -90 dBm unless the hand-back threshold is >-90 dBm In this case, the power up message will be sent when the mobile RSSI reaches the hand-back threshold.

HAND-IN THRESHOLD

Entry:

Main Menu ⇒ Sys. Par. Menu ⇒ Thresholds and Power Control Menu ⇒ B <CR>

Purpose: To set the signal level threshold at which a mobile on one of the donor voice channels becomes a candidate for boosting.

Options:
- Allowable range: -120 dBm to -20 dBm
- Default: -90 dBm
- To disable: 0

2.5.5 Thresholds and Power Control Menu (Continued)

MULTI-DONOR ACTIVATION THRESHOLD

Entry:

Main Menu ⇒ Sys. Par. Menu ⇒ Thresholds and Power Control Menu ⇒ C <CR>

Purpose: To set the signal level threshold at which a mobile being boosted will trigger transmission of a boosted/donor channel relationship message to any listening Multi-Donor Units (MDUs). *(To enable operation with MDUs, this threshold must be set at a level that will trigger data transmission—and the subsequent untranslate action at the MDU—before the mobile gets too weak to handle at the EAC-2000. Once sent, the relationship stays in effect at the MDU for an ample time period. The strength of the mobile at the adjacent cell site will determine when translation occurs, if at all.)*

Options:

- -120 to -20 dBm
- 0 DISABLED: Default (appropriate if no MDUs are installed in adjacent cell sites)
- A ALWAYS (sent whenever call setup does not depend on signal level)

Setting the Level:

- If set too high, unnecessary transmissions to the MDUs will occur.
- If set higher than the hand-in threshold, a mobile may be handed from the boosting EAC-2000 back to one cell site, then to another cell site, and then picked up again by the EAC-2000.
- Reasonable setting: Half-way between hand-in threshold and hand-back threshold.

NOTE: This parameter does not affect EAC-2000 hand-ins (controlled by donor voice channel lists and hand-in threshold) or EAC-2000 hand-backs (controlled by hand-back threshold). It only controls boosted/donor channel relationship message transmission, which in turn affects cellular system-generated hand-offs aided by the MDUs.

2.5.5 Thresholds and Power Control Menu (Continued)

HAND-BACK THRESHOLD

Entry:

Main Menu ⇒ Sys. Par. Menu ⇒ Thresholds and Power Control Menu ⇒ D <CR>

Purpose: To set the signal level threshold at which a mobile being boosted becomes a candidate for returning to the original donor site voice channel.

Options:
- Allowable range: -120 dBm to -20 dBm
- Default: -100 dBm
- To disable: 0

HAND-IN MOBILE POWER STEP

Entry:

Main Menu ⇒ Sys. Par. Menu ⇒ Thresholds and Power Control Menu ⇒ E <CR>

Purpose: To set the mobile attenuation code (VMAC) sent to mobiles being boosted to establish the power step.

Options:
- Allowable range: 0–7
  - 0 = full power (3 watts)
  - Each step corresponds to a 4 dB decrease in power (7 = 28 dB below full power)
- Default: 0

HAND-BACK MOBILE POWER STEP

Entry:

Main Menu ⇒ Sys. Par. Menu ⇒ Thresholds and Power Control Menu ⇒ F <CR>

Purpose: To set the mobile attenuation code (VMAC) sent to mobiles during hand-back attempts, which establishes the power level of mobiles handed back to donor cell.

Options:
- Allowable range: 0–7
  - 0 = full power (3 watts)
  - Each step corresponds to a 4 dB decrease in power (7 = 28 dB below full power)
- Default: 0

2.5.5 Thresholds and Power Control Menu (Continued)

RSSI AVERAGING SPEED

Entry:

Main Menu ⇒ Sys. Par. Menu ⇒ Thresholds and Power Control Menu ⇒ G <CR>

Purpose: To select the algorithm used to average the RSSI readings taken on the channels in the Donor Voice Channel Lists.

Mobiles operating on these channels are operating directly with the donor. The channels are continuously scanned, and the readings are averaged and compared to the hand-in threshold in order to identify mobiles that need boosting as they drive into the boosted coverage area with a call already in progress.

Options:

- 1 SLOW:
  - Causes the average RSSI to reflect the last 10–20 readings.
  - Provides for an average that is extremely immune to fluctuations in the signals but will require 10–20 seconds to identify a hand-in candidate.
  - Appropriate for reducing unsuccessful hand-in attempts for installations that have relatively few (< 20) donor voice channels and in which the terrain is relatively flat, such that the EAC-2000 can "see" the mobiles for a long time before they reach the hand-in threshold.
- 2 MEDIUM:
  - Causes the average RSSI to reflect the last 4–8 readings.
  - Provides for a compromise between immunity to signal fluctuations and fast identification of hand-in candidates.
  - DEFAULT setting.
- 3 FAST:
  - Causes the average RSSI to reflect the last 2–5 readings.
  - Provides for the least immunity to fluctuations but the fastest possible identification of hand-in candidates.
  - Appropriate for installations with a large number (> 60) of donor voice channels or for installations with rugged terrain where mobiles may suddenly "appear" to the EAC-2000 and need boosting quickly.

2.5.5 Thresholds and Power Control Menu (Continued)

DELAY BETWEEN HAND-IN ATTEMPTS

Entry:

Main Menu ⇒ Sys. Par. Menu ⇒ Thresholds and Power Control Menu ⇒ H <CR>

Purpose: To set the amount of time between hand-in attempts on a mobile identified as a candidate for boosting (i.e., when signal exceeds hand-in threshold).

When a hand-in candidate is identified, a hand-in is attempted. The attempt will be unsuccessful if the signal at the mobile is stronger from the donor than from the EAC-2000. After an unsuccessful attempt, the EAC-2000 waits the period set in the "Delay Between Hand-in Attempts" parameter before it resumes scanning of that channel. This prevents repeated back-to-back hand-in attempts on the candidate.

Options:
- Allowable range: 0–250 seconds
- Default: 5 seconds

NOTE: The total delay between repeated hand-in attempts on the same channel will be equal to the SAT Fade Time-out (the time it takes to perform an unsuccessful attempt), plus the Delay Between Hand-in Attempts, plus the time it takes for the RSSI averaging to come back up (2–4 seconds for the MEDIUM setting).

STATION POWER CLASS SELECTIVE BOOSTING

Entry:

Main Menu ⇒ Sys. Par. Menu ⇒ Thresholds and Power Control Menu ⇒ I <CR>

Purpose: Allows EAC-2000 to be configured to boost only lower-power units. This would be useful in situations where the EAC-2000 is deployed primarily to enhance portable coverage, but where it might also capture mobiles that do not need boosting (i.e., a convention center or mall close to a major highway).

Options:
- BOOST ALL CLASSES
- BOOST I-III ONLY
- BOOST I-II ONLY
- BOOST I ONLY

2.5.6 Disconnect Control Menu

Entry:

Main Menu ⇒ System Parameters Menu ⇒ F <CR>

Menu:

		Default Values
A	Donor RSSI	-80 dBm
B	SAT Fade Time-out	5 Sec
C	Max Num of Hand-Back Attempts per Call	10
D	Minimum Delay Between Hand-back Attempts	15 Sec

Purpose: Gives access to parameters associated with the call disconnect function.

DONOR RSSI

Entry:

Main Menu ⇒ Sys. Par. Menu ⇒ Disconnect Control Menu ⇒ A <CR>

Purpose: To establish a minimum RF signal level the booster should expect from the donor cell during a call. If the signal on the Donor Voice Channel in use falls below this level, the booster will end the call.

Options:

- Allowable range: -100 dBm to -20 dBm
- Default: -80 dBm
- To disable: 0

2.5.6 Disconnect Control Menu (Continued)

SAT FADE TIME-OUT

Entry:

Main Menu ⇒ Sys. Par. Menu ⇒ Disconnect Control Menu ⇒ B <CR>

Purpose: To set the time period the system will wait before terminating an established call when proper SAT is not detected from a mobile.

Options:
- Allowable range: 0–250 seconds
- Default: 5 seconds

Setting the Time Period:
- A setting of > 15 seconds may cause calls to continue to be boosted when no mobile is on the channel.
- A setting of > 5 seconds will affect the distribution of reasons for call terminations reported by the DCS command.
- **Do not** set to > minimum delay between hand-back attempts (except for system testing). Hand-back attempts are performed at that interval, and after a hand-back attempt, the mobile gets a fresh SAT fade timeout interval.

MAX NUM OF HAND-BACK ATTEMPTS PER CALL

Entry:

Main Menu ⇒ Sys. Par. Menu ⇒ Disconnect Control Menu ⇒ C <CR>

Purpose: To set the maximum number of hand-back attempts made on mobiles identified as candidates for hand-back (i.e., signal below hand-back threshold). If the hand-back is not successful before this maximum number is reached, the booster assumes that the mobile is driving away from donor cell site and maintains the call as long as possible.

Options:
- Allowable range: 0–250 attempts
- Default: 10

2.5.6 Disconnect Control Menu (Continued)

MINIMUM DELAY BETWEEN HAND-BACK ATTEMPTS

Entry:

Main Menu ⇒ Sys. Par. Menu ⇒ Disconnect Control Menu ⇒ D <CR>

Purpose: To set the time delay between hand-back attempts. This time delay, along with the Hand-back Threshold and the Max Num of Hand-back Attempts per Call, controls the hand-off of calls being boosted back to the donor cell.

The signal level from mobiles being boosted is constantly monitored. If it falls below the Hand-back Threshold, a hand-back attempt is performed. If the call is not successfully handed back to the donor (i.e., if the EAC-2000 still provides a better signal than the donor), the EAC-2000 waits the time period set in the Minimum Delay Between Hand-back Attempts parameter before again monitoring the mobile signal. This spaces out hand-back attempts on a mobile that has fallen below the hand-back threshold but cannot yet be handed back. (This is important because the hand-back attempt causes a minimal audio interruption.)

Options:
- Allowable range: 0–250 seconds
- Default: 15 seconds

☞ **NOTE:** Do not set lower than SAT fade timeout (see note under SAT fade timeout).

2.5.7 Call Processing Parameters Menu

Entry:

Main Menu ⇒ System Parameters Menu ⇒ G <CR>

Menu:

Call Processing Parameters Menu

		Default Values
C	Mobile RSSI > THRESHOLD Parameters	C1
D	Hand-back/Grab-back Control	D1
E	Recommendations	

Purpose: To provide a mechanism for tailoring EAC-2000 operation for specific switch manufacturers. The specific timings and algorithms being controlled are too detailed to describe, and virtually impossible to set, independently. Instead, combinations that have proven successful or desirable are grouped together and referred to as "Options." In the future, as other useful combinations are identified, more options will be added.

2.5.7 Call Processing Parameters Menu (Continued)

MOBILE RSSI > THRESHOLD PARAMETERS

Entry:

Main Menu ⇒ Sys. Par. Menu ⇒ Call Processing Parameters Menu ⇒ C <CR>

Options:

- (1) Option C1 - Standard Call Processing

HAND-BACK/GRAB-BACK CONTROL

Entry:

Main Menu ⇒ Sys. Par. Menu ⇒ Call Processing Parameters Menu ⇒ D <CR>

Purpose:

Options:

- (1) Option D1 - Standard Call Processing
- (2) Option D2 - Dont Mute Reverse Carrier

2.6 Alarms Menu

Entry:

Main Menu ⇒ D <CR>

Menu:

Alarms Menu

		Default Values
A	Antenna Return Loss - Low Alarm Point	6 dB
B	PA to Antenna High Loss Alarm Point	9 dB
C	PA Temp - High Alarm Point	90 Deg C
D	PA Temp - Fan Activation Point	60 Deg C
E	PA Temp - PA Power Cutback Point	90 Deg C
F	Mobile Power Control Causes PA Power Cutback	DISABLED
G	+28 Volt Supply - PA Power Cutback Point	23.0 Volts
H	+28 Volt Supply - Low Alarm Point	23.0 Volts
I	+12 Volt Supply - Low Alarm Point	10.0 Volts
J	+6 Volt Supply - Low Alarm Point	5.4 Volts
K	External Analog Inputs	ALARM POINTS
L	External Digital Inputs	ALARM STATES
M	External Digital Outputs	STATES
N	Critical Alarms	ALARMS REPORTED
O	RSSI - Alarms	ALARM POINTS

Purpose: Gives access to parameters associated with generating alarm conditions (conditions, such as temperature extremes or low battery voltage, that cause EAC-2000 to register an alarm). Each condition may be designated "log only" (the EAC-2000 will maintain a log of the alarms that occur) or "critical" (the EAC-2000 will automatically dial a telephone number to report the alarm).

2.6.1 Antenna Return Loss - Low Alarm Point

Entry:

Main Menu ⇒ Alarms Menu ⇒ A <CR>

Purpose: To specify the alarm threshold for the return loss on the M1 antenna port. When sufficient power is transmitted, the M1 antenna forward power reading is compared to the reverse power reading. If forward minus reverse power is equal or less than the Antenna Return Loss - Low Alarm Point parameter, an alarm is generated. This is useful for detecting faulty antenna or cable conditions.

With laboratory quality 50 ohm loads attached, the sensor will indicate 16 to 18 dB return loss. The default setting of 6 dB corresponds to a VSWR of 2. That is, with the alarm point set to 6 dB, an alarm will be generated if the VSWR is higher than 2.

Options:

- Allowable range: 0 (DISABLED), 1 to 20 dB
- Default: 6 dB

2.6.2 PA to Antenna Loss - High Alarm Point

Entry:

Main Menu ⇒ Alarms Menu ⇒ B <CR>

Purpose: To specify the threshold for the PA to antenna high loss alarm. At power-on, and once per hour during operation, a test is conducted. Because the test requires that one PA at a time be keyed, the test is conducted only when no calls are up. (If a new call is detecting during the test, the test is aborted.) Each nondisabled board/PA is individually keyed, and the PA power reading is compared to the M2 (for board 6) or M1 (for all other boards) forward power reading.

If the PA power minus the antenna power is equal to or greater than the threshold, an alarm is generated. This indicates problems with the combiner, duplexer, or cabling. A mistuned combiner will cause these alarms to occur.

Options:
- Allowable range: 0 (DISABLED—TEST IS NOT CONDUCTED), 1 to 20 dB
- Default: 9 dB

2.6.3 PA Temperature - High Alarm Point

Entry:

Main Menu ⇒ Alarms Menu ⇒ C <CR>

Purpose: To define the upper PA temperature limit. Temperatures above this limit cause an alarm to be logged.

Options:
- Allowable range: 0–100°C
- Default: 90°C

2.6.4 PA Temperature - Fan Activation Point

Entry:

Main Menu ⇒ Alarms Menu ⇒ D <CR>

Purpose: To identify the temperature that will cause the heat exchanger fan to be activated. The temperature must drop at least 8°C below the fan activation point before the fan will turn off.

Options:
- Allowable range: 0–100°C
- Default: 60°C

DYNAMIC FORWARD POWER CONTROL ALGORITHM:

The next three parameters control the dynamic forward power control algorithm. This algorithm dynamically adjusts the forward PA output power step according to:

- PA temperature
- Mobile VMAC power level
- +28 volt supply voltage

Each of the three controlling parameters can be individually disabled and adjusted. The algorithm is not cumulative—for example, if the PA temperature is too high, and the +28 volt supply is too low, the PAs will be reduced by only one step, not two. Also, the PA low power alarm threshold is effectively reduced when the algorithm has caused PA step reduction. That is, a FORWARD PA POWER LOW ALARM WILL not be caused by this algorithm (unless the power measured at a particular step is lower than it should be at that step).

2.6.5 PA Temp - PA Power Cutback Point

Entry:

Main Menu ⇒ Alarms Menu ⇒ E <CR>

Purpose: To specify one of the three parameters that control the Dynamic Forward Power Control algorithm.

If the temperature on a forward PA reaches the PA temp - PA Power Cutback Point, that PA's power step will be lowered one step below the user-specified Forward PA Power Step. Normally, this will result in significant cooling. When that PA's temperature drops 8ºC below the cutback temperature, the normal operating power step will be restored (unless one of the other mechanisms has imposed a power cutback).

Options:

- Allowable range: 0 (DISABLED), 1–100ºC
- Default: 90ºC

2.6.6 Mobile Power Control Causes PA Power Cutback

Entry:

Main Menu ⇒ Alarms Menu ⇒ F <CR>

Purpose: To specify the second of the three parameters that control the Dynamic Forward Power Control algorithm. If enabled, this causes the forward PA power step to be reduced in conjunction with the mobile power reduction (which, in turn, is controlled by the Mobile Dynamic Power Control Threshold). If enabled, for each two-step reduction in mobile power, the forward PA power is reduced one step. This mechanism is commonly employed to reduce the total amount of RF power in the system to the minimum, which statistically lowers the carrier to interference ratio.

Options:
- ENABLED
- DISABLED (Default)

2.6.7 +28 Volt Supply - PA Power Cutback Point

Entry:

Main Menu ⇒ Alarms Menu ⇒ G <CR>

Purpose: To specify the third of the three parameters that control the Dynamic Forward Power Control algorithm.

If the +28 volt supply voltage as measured at the controller board is equal to or lower than the +28 Volt Supply - PA Power Cutback Point parameter, all forward PA power steps will be lowered one step below the user specified Forward PA Power Step parameter. This will result in significantly less current drain. When the voltage goes back up by 1 volt, the normal operating power step will be restored (unless one of the other mechanisms has imposed a power cutback).

Options:
- Allowable range: 0 (DISABLED), .1 TO 50.9 VOLTS
- Default: 23.0 VOLTS

2.6.8 +28 Volt Supply - Low Alarm Point

Entry:

Main Menu ⇒ Alarms Menu ⇒ H <CR>

Purpose: To specify the +28 volt supply voltage alarm threshold. An alarm is generated if the +28 volt reading is equal to or lower than this voltage. The +28 volt is maintained by the system power supply and, optionally, by backup batteries. The EAC-2000 will continue to function down to about 19 volts. Normally, this alarm is used to signal loss of ac power. If set close to +28 volts, an alarm will be generated very quickly after the ac is lost. The voltage may be lowered to cause alarms to generate after some amount of battery discharge.

Options:
- Allowable range: 0 (DISABLED), .1 TO 50.9 VOLTS
- Default: 23.0 VOLTS

2.6.9 +12 Volt Supply - Low Alarm Point

Entry:

Main Menu ⇒ Alarms Menu ⇒ I <CR>

Purpose: To specify the +12 volt supply voltage alarm threshold. An alarm is generated if the +12 volt reading is equal or lower than this voltage. This alarm indicates a problem with the +28 to +12 volt dc-dc converter, harness wiring, or connectors.

Options:
- Allowable range: 0 (DISABLED), .1 TO 14.9 VOLTS
- Default: 10.0 VOLTS

2.6.10 +6 Volt Supply - Low Alarm Point

Entry:

Main Menu ⇒ Alarms Menu ⇒ J <CR>

Purpose: To specify the +6 volt supply voltage alarm threshold. An alarm is generated if the +6 volt reading is equal to or lower than this voltage. This alarm indicates a problem with the +28 to +6 volt dc-dc converter, harness wiring, or connectors.

Options:
- Allowable range: 0 (disabled), .1 to 9.9 volts
- Default: 5.4 volts

2.6.11 External Analog Inputs Menu

Entry:

Main Menu ⇒ Alarms Menu ⇒ K <CR>

Menu:

External Analog Inputs Menu

Default Values

PA 1–6 Cage:

1	Ext. Analog Input 1 Alarm State . .	DISABLED; Input Currently 0.0 V
2	Ext. Analog Input 2 Alarm State . .	DISABLED; Input Currently 0.0 V
3	Ext. Analog Input 3 Alarm State . .	DISABLED; Input Currently 0.0 V
4	Ext. Analog Input 4 Alarm State . .	DISABLED; Input Currently 0.0 V

PA 7–11 Cage:

5	Ext. Analog Input 1 Alarm State . .	DISABLED; Input Currently 0.0 V
6	Ext. Analog Input 2 Alarm State . .	DISABLED; Input Currently 0.0 V
7	Ext. Analog Input 3 Alarm State . .	DISABLED; Input Currently 0.0 V
8	Ext. Analog Input 4 Alarm State . .	DISABLED; Input Currently 0.0 V

Purpose: Allows setting of the alarm conditions for the external analog inputs available on a connector at the back of each PA cage. Up to four analog inputs per PA cage may be connected.

Options:

- Allowable entries:
  - (0) DISABLED
  - (1) ABOVE
  - (2) BELOW
- The input alarm points are individually controllable; if *above* or *below* is selected, a threshold between .1 and 5.0 volts may be specified.
- Default: (0) Disabled

2.6.12 External Digital Inputs Menu

Entry:

Main Menu ⇒ Alarms Menu ⇒ L <CR>

Menu:

External Digital Inputs Menu

Default Values

PA 1–6 Cage:

1	Ext. Digital Input 1 - Alarm State .	DISABLED; Input Currently LOW
2	Ext. Digital Input 2 Alarm State . .	DISABLED; Input Currently LOW
3	Ext. Digital Input 3 Alarm State . .	DISABLED; Input Currently LOW
4	Ext. Digital Input 4 Alarm State . .	DISABLED; Input Currently LOW

PA 7–11 Cage:

5	Ext. Digital Input 1 Alarm State . .	DISABLED; Input Currently LOW
6	Ext. Digital Input 2 Alarm State . .	DISABLED; Input Currently LOW
7	Ext. Digital Input 3 Alarm State . .	DISABLED; Input Currently LOW
8	Ext. Digital Input 4 Alarm State . .	DISABLED; Input Currently LOW

Purpose: Allows setting of the alarm conditions for the external digital inputs available on a connector at the back of each PA cage. Up to four digital inputs per PA cage may be connected.

Options:

- Allowable entries:
  - (0) DISABLED
  - (1) HIGH
  - (2) LOW
- Default: (0) DISABLED

2.6.13 External Digital Outputs Menu

Entry:

Main Menu ⇒ Alarms Menu ⇒ M <CR>

Menu:

External Digital Outputs Menu

		Default Values
PA 1–6 Cage:		
1	Ext. Digital Output 1 State	LOW
2	Ext. Digital Output 2 State	LOW
3	Ext. Digital Output 3 State	LOW
4	Ext. Digital Output 4 State	LOW
PA 7–11 Cage:		
5	Ext. Digital Output 1 State	LOW
6	Ext. Digital Output 2 State	LOW
7	Ext. Digital Output 3 State	LOW
8	Ext. Digital Output 4 State	LOW

Purpose: Allows setting of the state for the external digital outputs available on a connector at the back of each PA cage. Up to four digital outputs per PA cage may be connected. The outputs may be used to control external equipment via the EAC-2000 remote link. Also, options (1) and (2) support using external monitoring equipment to be connected to the EAC-2000.

Options:

- Allowable entries:
  - (0) LOW
  - (1) LOW IF CRITICAL ALARM EXISTS
  - (2) HIGH IF CRITICAL ALARM EXISTS
  - (3) HIGH
- Default: (0) LOW

2.6.14 Critical Alarms Menu

Entry:

Main Menu ⇒ Alarms Menu ⇒ N <CR>

Menu:

Critical Alarms Menu

		Default Values
A	BOARD OUT-OF-SERVICE ALARM	CRITICAL
B	Board ROM Alarm	CRITICAL
C	Board Calibration Memory Alarm	CRITICAL
D	Serial Data Link Alarm	CRITICAL
E	Personality Mismatch Alarm	CRITICAL
F	Synthesizer Unlocked Alarm	CRITICAL
G	RVS PA Pwr Low Alarm	CRITICAL
H	RSSI Alarm	LOG ONLY
I	PA Out-of-Service Alarm	CRITICAL
J	PA Temp - High Alarm	LOG ONLY
K	PA Power - Low Alarm	CRITICAL
L	PA to Antenna High Loss Alarm	CRITICAL
M	Antenna Ret Loss Alarm	CRITICAL
N	ROM Alarm	CRITICAL
O	RAM Alarm	CRITICAL
P	NOVRAM Alarm	CRITICAL
Q	SAT Detector Alarm	CRITICAL
R	Power Supply Voltages - Low Alarm	CRITICAL
S	External Analog Input Alarm	LOG ONLY
T	External Digital Input - Alarms	LOG ONLY

Purpose: Displays the alarms of which the EAC-2000 maintains a log. Any of the alarms can be set to "Log Only" (the EAC-2000 enters the alarm in its log) or "Critical" (the EAC-2000 logs the alarm and also automatically dials a designated telephone number to report the alarm). To set an alarm, select the letter in front of the alarm and select the state. (See Volume 2, Section 3.8 for alarm descriptions.)

2.6.15 RSSI Alarm Points Menu

Entry:

Main Menu ⇒ Alarms Menu ⇒ F <CR>

Menu:

RSSI Alarm Points Menu

		Default Values
A	Donor Control Channel RSSI - High Alarm Point	DISABLED
B	Donor Control Channel RSSI - Low Alarm Point . .	-80 dBm
C	Donor Voice Channel RSSI - High Alarm Point .	DISABLED

Purpose: Displays the RSSI signal levels that generate alarms.

DONOR CONTROL CHANNEL RSSI - HIGH ALARM POINT

Entry:

Main Menu ⇒ Alarms Menu ⇒ RSSI Alarms Menu ⇒ A <CR>

Purpose: To set the upper level for RSSI reading on the forward control channel. If the signal exceeds this level, an alarm is logged.

Options:
- Allowable range: -100 to -20 dBm
- Default: Disabled

DONOR CONTROL CHANNEL RSSI - LOW ALARM POINT

Entry:

Main Menu ⇒ Alarms Menu ⇒ RSSI Alarms Menu ⇒ B <CR>

Purpose: To set the lower level for RSSI reading on the forward control channel. If the signal falls below this level, an alarm is logged.

Options:
- Allowable range: -100 to -20 dBm
- Default: -80 dBm

2.6.15 RSSI Alarm Points Menu (Continued)

DONOR VOICE CHANNEL RSSI - HIGH ALARM POINT

Entry:

Main Menu ⇒ Alarms Menu ⇒ RSSI Alarms Menu ⇒ C <CR>

Purpose: To set the upper level for RSSI reading on the forward voice channel. If the signal exceeds this level, an alarm is logged.

Options:
- Allowable range: -100 to -20 dBm
- Default: Disabled

2.7 Set Defaults

Entry:

Main Menu ⇒ E <CR>

Purpose: To return all parameters to default settings.

CAUTION! Using selection **E**, Set Defaults, will default all parameters, including channels. Be sure to record ALL data before invoking this selection so that parameters may be reentered.

Section 3. System Monitoring Commands

3.1 Introduction

The EAC-2000 software allows the operator to obtain information on the status and performance of the system through a variety of simple commands. Each command is entered from the command entry level prompt (>). The following commands are described in this section of the manual:

- SSS (Show System Status) Command
- SCS (Show Call Status) Command
- RSS (RSSI Report) Command
- SSR (Scanned RSSI Report) Command
- PWR (PA Power Display) Command
- SAT (SAT Report) Command
- ALA (Alarm Report) Command
- DCS (Display Call Statistics) Command
- DCH (Display Call History) Command
- TIM (Time Display and Change) Command
- MIN (Mobile ID Number) Command
- REV (Show Hardware Revisions) Command

3.2 SSS (Show System Status) Command

Entry: At the > prompt, enter **SSS <CR>**.

Purpose: Lists a one-page report of selected EAC-2000 operating parameters, along with the conditions of inputs that are monitored, then returns to the command entry level. Figure 3-1 shows a sample SSS report. Items listed in the report are described on the following pages.

3.2 SSS (Show System Status) Command (Continued)

Figure 3-1. Sample SSS Report

```
>SSS

BOARD/PA    1      2      3      4      5      6      7      8      9      10     11
BD MODE     CNTL   VOICE  STBY   STBY   STBY   SCAN   STBY   STBY   DSABL  DSABL  DSABL
BD TYPE     AMPS   AMPS   AMPS   AMPS   AMPS   AMPS   AMPS   AMPS   NONE   NONE   NONE
DON. CHAN   333    84     63     105    84     329    105    84
BOOST CHAN  319    112    133    154    175    105    196    217
DON. RSSI   -64    -650   <-100  <-100  <-100  <-100  <-100  <-100
MOB. RSSI   <-120  -87    <-120  <-120  <-120  <-120  <-120  <-120
MOB.VMAC    0      0      0      0      0      0      0      0      0      0      0
ANT. SEL    M1     M1/2   M1/2   M1/2   M1/2   M1     M1/2   M1/2   M1/2   M1/2   M1/2
RVS PA SET  +20    +20    +20    +20    +20    +20    +20    +20    +20    +20    +20
RVS PA PWR  <0     +21    <0     <0     <0     <0     <0     <0
FWD PA MODE KEYED  KEYED  OFF    OFF    OFF    OFF    OFF    OFF    OFF    OFF    OFF
FWD PA STEP 0      0      0      0      0      0      0      0      0      0      0
FWD PA PWR  +46    +46    +0     +0     +0     +0     +0     +0     +0     +0     +0
FWD PA TEMP 46     42     40     34     34     34     36     38     0      0      0
M1 ANT PWR  FWD:   +44    REFL:  +0

Press RETURN when ready for more. . .

SUPPLY VOLTAGES         +28V   +12V   +6V
AT PA1-6 CAGE:          27.1   12.0   6.0
AT PA7-11 CAGE:         27.1   12.0   6.0
AT CNTLR BOARD:                12.1   6.0

EXT.ANALOG VOLTAGES:    XAD1   XAD2   XAD3   XAD4
AT PA1-6 CAGE:          0.0    0.0    0.0    0.0
AT PA7-11 CAGE:         0.0    0.0    0.0    0.0

EXT. DIGITAL INPUTS:    XIN1   XIN2   XIN3   XIN4
AT PA1-6 CAGE:          LOW    LOW    LOW    LOW
AT PA7-11 CAGE:         LOW    LOW    LOW    LOW

EXT. DIGITAL OUTPUTS    XOUT1  XOUT2  XOUT3  XOUT4
AT PA1-6 CAGE:          LOW    LOW    LOW    LOW
AT PA7-11 CAGE:         LOW    LOW    LOW    LOW

EAC SERIAL NUMBER:      SOFTWARE VERSION 20.03
```

3.2 SSS (Show System Status) Command (Continued)

Reported Items:

- BD MODE: Operating mode of each IF board (Standby, Control, Voice, Scan, or Disabled).

Status	Indicates
CNTL	Control
VOICE	Voice
STBY	Standby
SCAN	Scan (Scanning donor voice channels)
DSABL	Disabled (Board disabled by user, or alarm has occurred on board)

(NOTE: If a board or PA is disabled, the matching element will not be used by the system. If a forward PA is out of service due to an alarm, the associated forward board will be Standby.)

- BD TYPE: RF board type as read from the actual hardware. The installed RF boards have a built-in personality identifier which is read and reported.
  - Possible board types: JTACS, AMPS or ETACS
  - NONE=No board is detected, or there is a hardware communication problem between the RF board and the controller. (The channel display for that board will be blank.)

- DONOR CHAN: Forward transmit / reverse receive.

- BOOST CHAN: Forward transmit / reverse receive (blank if no board is installed).

- DONOR RSSI: Current RSSI from donor.

- MOBILE RSSI: Current RSSI from mobile.

- MOBILE VMAC: Current power level of mobile. 0 = Max power, 1 = 4 dB down, etc.

- ANTENNA SEL: Antenna selected via the SET command.

- RVS PA SET: Power level setting of the reverse PA.

- RVS PA PWR: Power reading of the reverse PA.

- FWD PA MODE: "KEYED," "OFF," or "DSABL."

3.2 SSS (Show System Status) Command (Continued)

- FWD PA STEP: Power level step (0=maximum power; 1=down 4 dB, etc.).
- FWD PA PWR: Power output reading of the forward PA output (ahead of combiner).
- FWD PA TEMP: Temperature reading of the PA associated with the board. A hyphen (-) indicates the PA has no temperature sensor.
- M1 ANT PWR: Forward and reflected power readings at the M1 antenna sensor. Represents PA 1–5, 7–11 forward powers after combiner and duplexer loss.
- SUPPLY VOLTAGES: +28, +12, and +6 volt supply voltage readings at various monitoring points.
- EXT. ANALOG VOLTAGES: Voltages at the external alarm/control connector on each PA cage. Range 0 to 5 volts.
- EXT. DIGITAL INPUTS: The state (LOW or HIGH) of the digital inputs on the external alarm/control connector. LOW = nothing connected, or less than 2 volts.
- EXT. DIGITAL OUTPUTS: State of the digital outputs on the external alarm/control connector. LOW = pulled to ground; HIGH = open collector off.

3.3 SCS (Show Call Status) Command

Entry: At the > prompt, enter **SCS <CR>**.

Purpose: Displays a short report of the current status of the RF boards. The system then pauses but continues to monitor the status. If the status of a board pair changes, a new report will be displayed. This command is especially useful in monitoring call activity in the boosted coverage area. Figure 3-2 shows a sample SCS report.

Figure 3-2. Sample SCS Report

```
>scs

BD    STATUS      DONOR     BOOST     MOBILE    REASON
                  CHAN      CHAN      VMAC
1     CONTROL     333       319       -         VOICE CHANNEL AVAILABLE
2     VOICE       84        112       0         MOBILE ORIGINATED CALL MIN=1231231234
3     STANDBY     -         -         -         MOBILE RELEASE DETECTED
4     STANDBY     -         -         -         MOBILE RSSI < THRESHOLD
5     STANDBY     -         -         -         MOBILE SAT FADED
6     SCAN        -         -         -         SYSTEM SETUP
7     STANDBY     -         -         -         UNSUCCESSFUL SETUP
8     STANDBY     -         -         -         SYSTEM SETUP
9     DISABLED    -         -         -         SYSTEM SETUP
10    DISABLED    -         -         -         SYSTEM SETUP
11    DISABLED    -         -         -         SYSTEM SETUP
```

Commands to Use During SCS:

Command	Action
R or **r**	Display the board RSSIs.
P or **p**	Display PA power readings.
S or **s**	Display board SAT readings.
H or **h**	Hold screen update (to be used if heavy call activity is causing information to go by too quickly). Use any keystroke to resume normal screen updating.
T or **t**	Turn time stamp on or off.
A or **a**	Lists number of handback attempts that have occurred since call began or, if board is STANDBY, the total number for the least call on that board.
Space or **<CR>**	Update screen (even if no status change has occurred).
<ESC> or **<CTRL> Z**	Exit the SCS command and return to the > prompt.

3.3 SCS (Show Call Status) Command (Continued)

Items Listed for Each Board Pair:

- STATUS: Current usage of the board: Standby, Control, Voice, or Disabled.
  - Board 1 is normally used to boost the **control** channel.
  - Boards 2-5 and 7-11 are used to boost the **voice** channels (on **standby** when no call is up).
  - Board 6 is used to scan (sometimes as CNTL).
  - **Disabled** means the board or the associated forward PA has been disabled by the user or because of an alarm.
  - **Pre-voice** occurs briefly at the beginning of mobile-originated or mobile-answered calls. This status occurs after the initial mobile access or page response on the reverse control channel and lasts until the voice channel assignment on the forward control channel.

- MOBILE VMAC: Current mobile power setting. Dynamic power control actions can be monitored by watching this column.
  - 0 = Maximum power
  - 7 = Minimum power (-28 dB)

- DONOR CHAN: Donor channel: control or voice. This is the input channel of the forward board and the output channel of the reverse board.

- BOOST CHAN: Boosted channel: control or voice. This is the output channel of the forward board and the input channel of the reverse board.

- REASON: Reason for the Status shown. Possible reasons are explained in the following chart.

3.3 SCS (Show Call Status) Command (Continued)

Reason Given	For ...	Indicates . . .
SYSTEM SETUP	Status	Board status was set at power up, after restore-to-service, or as result of SET command.
MOBILE ORIGINATED CALL	Voice	System detected a mobile-originated call.
MOBILE ANSWERED CALL	Voice	System detected a land-originated call.
MOBILE RSSI > THRESHOLD	Voice	Mobile RSSI exceeded the hand-in threshold.
MOBILE RELEASE DETECTED	Standby (when formerly Voice)	Mobile release (1.8 seconds of signaling tone) was detected.
MOBILE SAT FADED	Standby (when formerly Voice)	Mobile SAT was invalid for the SAT Fade Timeout period.
MOBILE RSSI < THRESHOLD	Standby (when formerly Voice)	Mobile RSSI receiver fell below the hand-back threshold.
DONOR RSSI < THRESHOLD	Standby (when formerly Voice)	Signal received from donor by forward receiver fell below donor RSSI threshold.
UNSUCCESSFUL SETUP (for RSSI candidates)	Standby (when formerly Voice)	EAC-2000 unable to send mobile to boosted voice channel. *(After a call setup is attempted, a boost path is set up and SAT from the mobile is monitored. If SAT does not verify within SAT Fade Timeout, call is ended. This means the mobile did not take hand-off message from booster, but remained on donor voice channel. This indicates that even though the mobile was identified as a candidate for boosting, the mobile was still in good contact with its donor cell site.)*
SETUP ABORTED	Standby (when formerly Voice)	Setup attempt aborted before any hand-off messages were sent to the mobile. *(Occurs occasionally on RSSI > Threshold calls if a mobile-originated or -answered call candidate is detected during setup process. In this case, the EAC-2000 will abort the RSSI call to handle the mobile-originated or -answered call, which is higher priority. Normally the RSSI candidate will be reidentified and handled shortly after the other call is completed.)*
ALARM DETECTED	Disabled	Either a board or the associated PA is disabled because of an alarm. *(More information about a disabled board can be obtained from the ALA command.)*
VOICE CHANNELS LOADED; VOICE CHANNEL AVAILABLE	Standby; Control	For the CNTL board only, indicates if EAC-2000 channels available. *(The cntl board switches to Standby when all voice channels are loaded only if the Control Channel State During All Channels Busy parameter is set to OFF. For all other settings of the Control Channel State parameter, the CNTL board remains active when all voice channels are loaded.)*

Continued . . .

3.3 SCS (Show Call Status) Command (Continued)

Reason Given	For ...	Indicates . . .
NO SERVICE ON DONOR CONTROL CHANNEL	Standby; Control	System data receiver listening to the forward control channel data stream from the donor cell site cannot obtain or maintain word synchronization. *(The CNTL board switches to Standby when there is No Service on Donor Control Channel only if the Control Channel State During All Channels Busy parameter is set to OFF. For all other settings of the Control Channel State parameter, the CNTL board remains active even if no donor control channel is received.)*
DEDICATED CONTROL BACKUP	Standby (CNTL board only)	Sometimes listed for a short duration after reset, automatic restore-to-service attempt, or switchover from board 6 boosting the control channel.
CALL TRANSFERRED	Standby (CNTL board only)	Voice call being boosted by the CNTL board was transferred to a voice board. *(The EAC-2000 CNTL channel always goes through this state on a call transfer, but SCS may not show it every time because the board switches to CNTL very quickly.)*
PAGE RESPONSE DETECTED	Pre-Voice	Mobile-answered call was detected (by monitoring the reverse control channel data stream).
MOBILE ACCESS DETECTED	Pre-Voice	Mobile-originated call was detected (by monitoring the reverse control channel data stream).
FALSE PRELIMINARY SETUP	Standby (when just previously Pre-Voice)	Although a mobile access or page response was detected, the system did not assign a voice channel within 5 seconds. *(Could be caused by a busy system. Some false accesses will also be decoded from noise. Occasional False Preliminary Setups are no cause for concern. For more information about why the false preliminary setup occurred, escape out of SCS and type* ***MIN****; the exact reason will be given here.)*
UNSUCCESSFUL PRELIMINARY SETUP (Multi-Hop systems only)	Standby (when just previously Pre-Voice)	EAC-2000 unable to identify boosted channel chosen by the previous EAC-2000 in the chain. *(Could be caused by incorrect channels entered for the Booster Link Channels on this or the previous EAC-2000, by interference on the booster link channel, or by the previous EAC-2000 having no voice channels available at the time of the call or incorrect Multi-Hop Mode parameter setting.)*

3.4 RSS (RSSI Report) Command

Entry: At the > prompt, enter **RSS**.

Purpose: Repeatedly lists the mobile RSSI readings on the installed boards (a header followed by a continuously updated display of the RSSI readings). To stop the display and return to the > prompt, hit ESC or **<CTRL> Z**. Figure 3-3 shows a sample list of RSSI readings. To display the donor RSSI readings, enter **RSS D** at the > prompt.

Figure 3-3. Sample List of RSSI Readings

```
>rss

BOARD/PA      1       2    3       4      5      6      7      8     9    10  11
MOBILE RSSI   <-120   -87  <-120   <-120  <-120  <-120  <-120  <-120
<ESCAPE>

>rss d

BOARD/PA      1       2    3       4      5      6      7      8     9    10  11
DONOR RSSI    -64     -65  <-100   <-100  <-100  <-100  <-100  <-100
<ESCAPE>
```

Mobile RSSI reflects the signal strength being received from the mobile at the M1 or M2 antenna connector; report range is -120 to -20 dBm.

- Mobile RSSI for the board boosting the control channel (defaults to board 1) will most often indicate <-120, since mobile transmissions on the reverse control channel are very brief (about 100 milliseconds).
- Mobile RSSI for boards involved in a call will vary according to the subscriber location.
- Mobile RSSI for board 6 will vary as the board is used to scan channels.
- Mobile RSSI for standby or disabled boards will indicate <-120.
- Mobile RSSI for positions with no board installed will be blank.

Donor RSSI reflects the signal strength being received from the donor as measured at the D1 antenna connector; report range is -100 to -20 dBm.

- Donor RSSI for the board boosting the control channel (defaults to board 1) should be steady and greater than -75 dBm (minimum signal level required from the donor).
- Donor RSSI for boards involved in a call should be steady and within a few dB of the donor RSSI on the control channel. Sometime during the last 5 seconds of a call, the signal level will drop to <-100. Donor RSSI for board should show <-100, unless board 6 is boosting the control channel.
- Donor RSSI for standby or disabled boards will indicate <-100.
- Donor RSSI for positions with no board installed will be blank.

3.5 SSR (Show Scanned Report) Command

Entry: At the > prompt, enter **SSR <CR>**, or **SSR** followed by a channel number.

Purpose: Repeatedly lists the averaged reverse RSSI readings on the donor voice channels as measured at the M1 or M2 antenna using board 6. Readings for 15 channels are shown; if no channel number is entered with the SSR command, then the 15 lowest channels in the list are displayed. If a channel is specified with SSR, then the 15 channels in the list equal to or greater than that are displayed. (It is not required that a channel in the list be entered to cause display of higher channels.)

Most often, the RSSI displayed is from mobiles in the donor area. Strong signals indicate mobiles that are approaching the EAC-2000.

In certain cases, the RSSI on a channel may be strong, but the EAC-2000 does not attempt to hand the candidate in. SSR precedes the RSSI with ***** or **L** to indicate channels that are not currently being considered for hand-in:

- A ***** that shows steady for 10 seconds, then disappears briefly, then is steady for another 10 seconds, and so on, indicates that the signal on the channel has RSSI above the Hand-in Threshold, but incorrect SAT.

- A steady ***** indicates the channel is one of the donor channels being boosted. In this case, SSR continues to display the RSSI being received on the channel, but the signal is coming from the EAC-2000 board boosting the call, not the mobile. (The mobile has been switched to the boosted voice channel.)

- If a channel has good RSSI and good SAT, but the mobile does not take the hand-in message (i.e., the EAC-2000 does repeated unsuccessful setups on the channel), then the SSR display will show no ***** briefly. When the ***** appears, it is because hand-in has been attempted. Typically, the RSSI will increase also, since there will be a board actively trying to boost the channel. After SAT Fade Timeout, the board will drop the boost, and the SSR displayed RSSI for the channel will drop, but the ***** will continue to display for the Delay Between Hand-in Attempts duration, after which the whole cycle will repeat.

- If SSR displays the RSSI with **L** preceding it, the channel is currently occupied by the modem mobile. In this case, the displayed RSSI is from the modem mobile as transmitted at the mobile antenna and received at the M1 or M2 antenna. Since the mobile transmit power is known, the isolation can be computed. Example:

  Suppose the Modem Mobile Power Step is set to 4, and SSR shows -35 dBm on the L designated channel. Then, the mobile to M1 or M2 antenna isolation would be +34 (max Power) - 16 (step 4 => 16 dB down) + 35 = 53 dB.

3.5 SSR (Show Scanned Report) Command (Continued)

☞ **VERY IMPORTANT:** The SSR reported for a channel that is currently being boosted by the EAC-2000 can be used to compute the isolation from the donor antenna to the antenna being used for board 6 (M1 or M2 as chosen in SET) in the mobile transmit band. Example:

(1) The Reverse PA Power Set is +20 dBm (the default).
(2) The Diversity parameter for board 6 is set to M1 (the default).
(3) SCS shows a call up with donor channel 300.
(4) SSR indicates -55 for channel 300.

In this case, the EAC-2000 would be transmitting channel 300 with +20 dBm on the D1 antenna. Board 6 would continue to scan the channel and receive -55 dBm at the M1 antenna.

The isolation on channel 300 would simply be the difference between +20 dBm and -55 dBm, or 75 db. Not that this shows the isolation on a single channel in the mobile transmit band only. A adequate reading is no guarantee that the isolation meets the specified minimum across the band and in the mobile receive band.

Use the following chart as a guide to see the strongest RSSI reading that should be displayed by SSR for channels being boosted. If stronger (i.e., lower) RSSIs occur, then the isolation is less than 75 db.

Reverse PA Power Set	Max SSR Displayed RSSI During Call for Isolation > 75 dB
+20 dBm	-55
+15 dBm	-60
+10 dBm	-65
+5 dBm	-70

3.6 PWR (PA Power Display) Command

Entry: At the > prompt, enter **PWR <CR>**, or **PWR X <CR>** where X is 1–6 indicating the display option desired.

Purpose: Mainly, PWR allows the user to continuously monitor the forward PA power. Also, PWR allows continuous monitoring of other PA parameters by choosing options 2–6. Each of the PWR options causes a selected SSS display line to be displayed on a continuously updated basis. The information has the same meaning as with SSS. Figure 3-4 shows a sample list of power readings.

Figure 3-4. Sample List of Power Readings

```
>pwr

OPTIONS:   1-FWD PA PWR; 2-FWD TEMP; 3-FWD MODE; 4-FWD STEP
           5-RVS PA PWR; 6-MOBILE VMAC... ENTER CHOICE: (1-6): 1

BOARD/PA   1    2    3    4    5    6    7    8    9    10   11
FWD PA PWR +46  +46  +0   +0   +0   +0   +0   +0   +0   +0   +0
<ESCAPE>
```

NOTE: PWR can be used to see the forward dynamic power control algorithm in action. The controlled parameter (FWD PA STEP), and two of the three controlling inputs (FWD PA TEMP and MOBILE VMAC) can be viewed. The third controlling input is the +28 Volt Supply Voltage reading.

3.7 SAT (SAT Report) Command

Entry: At the > prompt, enter **SAT <CR>**.

Purpose: Repeatedly lists the SAT readings on the boards (displays a header followed by a continuously updated display of the SAT readings for all boards). Figure 3-5 shows a sample list of SAT readings.

Figure 3-5. Sample List of SAT Readings

```
>sat

BOARD/PA     1     2     3     4     5     6     7     8     9     10    11
DONOR SAT    XXXX  6000  XXXX  XXXX  XXXX  XXXX  XXXX  XXXX  XXXX  XXXX  XXXX
MOBILE SAT   XXXX  6000  XXXX  XXXX  XXXX  XXXX  XXXX  XXXX  XXXX  XXXX  XXXX
<ESCAPE>
```

- Displayed values:
  - 5970, 6000, or 6030 = Valid SAT tone detected.
  - XXXX = Valid SAT tone not detected. (May indicate the board is being used for control channel boost or that a call is not currently up on the board.

- To stop the display and return to the > prompt, hit ESC or <CTRL> Z.

3.8 ALA (Alarm Report) Command

Entry: At the > prompt, enter **ALA <CR>**.

Purpose: Displays a one-page report of the number of times various alarm conditions have occurred since the last system reset, then returns to the > prompt. Figure 3-6 shows a sample ALA report. Reported alarms are described on the following pages.

- Counts stop at 255.

- All counts are zeroed after a power reset or a RES command. Counts may be zeroed by entering **ALA =0**.

- **Alarm log rate:** Some alarms are checked as often as five times a second. to prevent a single alarm condition from running up the count, a given alarm is logged at most one time in 10 minutes. The alarm counts may be interpreted as the number of 10-minute intervals in which the alarm occurred.

  There are two exceptions to this: the board and PA Out of Service alarms, which are really not logs at all, but reflect the current condition of the board or PA.

- **Automatic Restore to Service:** If an alarm condition causes a board or PA to be taken out of service, the system will continue to process calls using available boards and PAs until no calls are up. At that time, the controller will attempt to restore out-of-service boards to service by resetting the boards.

  After the boards reset, the controller power-on diagnostics are run on all boards and PAs. These diagnostics check for all alarms that may cause a board or PA to be out of service, and if an alarm of that type occurs, the board or PA remains out of service. If a board or PA fails to come back in service, the controller repeatedly tries to restore boards or PAs to service (during times when no calls are up) up to 10 times, the last 7 of which are spaced apart at least 1 hour. Note that regardless of whether the board or PA comes back in service, the original alarm that caused the problem is still maintained in the log. Except for the Out of Service alarms, the only way alarms will be zeroed is with **ALA=0** or a system reset.

Figure 3-6. Sample ALA Report

```
>ala

RF BOARD ALARMS RECORDED. . .
BOARD #:                                  1   2   3   4   5   6   7   8   9   10  11
BOARD OUT-OF-SERVICE ALARM                0   0   0   0   0   0   0   0   0   0   0
BOARD ROM ALARM                           0   0   0   0   0   0   0   0   0   0   0
BOARD CALIBRATION MEMORY ALARM            0   0   0   0   0   0   0   0   0   0   0
SERIAL DATA LINK ALARM                    0   0   0   0   0   0   0   0   0   0   0
PERSONALITY MISMATCH ALARM                0   0   0   0   0   0   0   0   0   0   0
SYNTHESIZER UNLOCK ALARM                  0   0   0   0   0   0   0   0   0   0   0
RVS PA PWR LOW ALARM                      0   0   0   0   0   0   0   0   0   0   0
DONOR RSSI HIGH ALARM - CNTL CHAN         0
DONOR RSSI LOW ALARM - CNTL CHAN          0
DONOR RSSI HIGH ALARM - VOICE CHAN        0   0   0   0   0   0   0   0   0   0   0
MOBILE RSSI HIGH ALARM - VOICE CHAN       0   0   0   0   0   0   0   0   0   0   0

PA ALARMS RECORDED. . .
PA #:                                     1   2   3   4   5   6   7   8   9   10  11
PA OUT-OF-SERVICE ALARM                   0   0   0   0   0   0   0   0   0   0   0
PA TEMP HIGH ALARM                        0   0   0   0   0   0   0   0   0   0   0
PA POWER LOW ALARM                        0   0   0   0   0   0   0   0   0   0   0
PA TO ANTENNA HIGH LOSS ALARM             0   0   0   0   0   0   0   0   0   0   0

Press RETURN when ready for more...

M1 ANTENNA RET LOSS ALARM ...............0

CNTLR BOARD ALARMS RECORDED...
ROM ALARM................................0
RAM ALARM................................0
NOVRAM ALARM.............................0
SAT DETECTOR #1 ALARM....................0
SAT DETECTOR #2 ALARM....................0

SUPPLY VOLTAGE ALARMS:  +28V   +12V   +6V
AT PA1–6 CAGE:          0      0      0
AT PA7–11 CAGE:         0      0      0
AT CNTLR BOARD:                0      0

EXT. ANALOG ALARMS:     XAD1   XAD2   XAD3  XAD4
AT PA1–6 CAGE:          0      0      0     0
AT PA7–11 CAGE:         0      0      0     0

EXT. DIGITAL ALARMS:    XIN1   XIN2   XIN3  XIN4
AT PA1–6 CAGE:          0      0      0     0
AT PA7–11 CAGE:         0      0      0     0
```

Alarms Reported for Each Board:

- BOARD OUT-OF-SERVICE ALARM: Board currently out of service due to a Board ROM alarm, Board Calibration Memory alarm, Synthesizer Unlock alarm, or RVS PA Pwr Low alarm. A call being boosted with that board will be dropped; however, other calls will continue. The system will continue to set up and boost calls using available boards until no calls are up, at which time the controller will attempt to restore the out-of-service board by resetting all boards. Boards that have been returned to service will not show a Board Out-of-Service alarm.

- BOARD ROM ALARM: Problem in the RF board read only memory. Checked for at power-up or restore-to-service by the RF board controller by computing a checksum and comparing to a store checksum. Causes board to be taken out of service.

- BOARD CALIBRATION MEMORY ALARM: Problem with the RF board nonvolatile memory, which is used to store calibration data for RSSI reporting, reverse PA power level set and reporting, etc. Checking is performed by the RF board controller by computing a checksum and comparing to stored checksum. Checked for at power-up or restore-to-service attempts. Causes board to be taken out of service.

3.8 ALA (Alarm Report) Command (Continued)

- SERIAL DATA LINK ALARM: Problem in serial link between controller board and RF board(s). This alarm is checked on each message received from the RF boards. If all installed boards have pegged counts, a problem on the controller board or the back plane is likely. If only one board has alarms, that board alone is suspect. If this alarm occurs, the board is taken out of service.

- PERSONALITY MISMATCH ALARM: Wrong type of board installed in a slot (e.g., a JTACS board in an AMPS EAC-2000). Checked for at power-up and restore-to-service attempts. Causes board to be taken out of service.

- SYNTHESIZER UNLOCKED ALARM: Unlocked synthesizer. Synthesizer lock is monitored continuously. Causes board to be taken out of service.

- RVS PWR LOW ALARM: The RVS PA Power reading reached or fell below the Reverse PA Power Low Alarm Point (- Voice or - Control, as appropriate).

  - For voice boards, checked at power-up, restore-to-service attempts, and once per minute when a call is up. Mobile RSSI must be at least -100 dBm and the alarm condition must persist for at least 1 second for this alarm to log on a voice board. Always causes voice board to be taken out of service.

  - For the cntl board (and also for board 6 when it is active as cntl), checked at power-up, restore-to-service attempts, and once every 10 minutes during operation during the next reverse control channel transmission.

    Causes the cntl board to be taken out of service <u>if the Backup Control Channel option is enabled</u>; otherwise, the cntl board is left active and the alarm is just logged.

- DONOR RSSI HIGH ALARM - CNTL CHAN: RSSI on CNTL board above the Donor Cntl Chan RSSI High Alarm Point parameter.

- DONOR RSSI LOW ALARM CNTL CHAN: RSSI on CNTL board below the Donor Cntl Chan RSSI Low Alarm Point parameter.

- DONOR RSSI HIGH ALARM - VOICE CHANNEL: Donor RSSI on board above the Donor Voice Channel RSSI - High Alarm Point during a call. The alarm condition must persist for 1 second before an alarm is logged.

- MOBILE RSSI HIGH ALARM - VOICE CHANNEL: RSSI from mobile above the Mobile Dynamic Power Control Threshold even after mobile has been powered back to step 7 (i.e., minimum power). Indicates mobiles were operating very close to EAC-2000. The alarm condition must persist for 1 second before an alarm is logged.

3.8 ALA (Alarm Report) Command (Continued)

Alarms Reported for Each Power Amplifier:

- PA OUT-OF-SERVICE ALARM: PA currently out of service due to PA Power Low alarm.

- PA TEMP HIGH ALARM: PA temperature above the PA Temperature High Alarm Point parameter. The alarm condition must persist for 5 seconds before an alarm is logged.

- PA POWER LOW ALARM: PA output power equal to or below the PA Power Low Alarm Point parameter.

  - For CNTL PA and for PA 6 when it is active as CNTL, checked at power-up, restore-to-service attempts, and once per minute thereafter. The alarm condition must persist for at least 3 seconds before an alarm is logged. Causes the CNTL PA to be taken out of service <u>if the Backup Control Channel option is enabled</u>; otherwise, the CNTL PA is left active and the alarm is just logged.

  - For Voice PAs, the alarm is checked continuously during a call but will only log if the signal being received from the donor exceeds -80 dBm. The low power condition must persist for 3 seconds for an alarm to be logged. A logged alarm will cause the PA to be taken out of service.

  - For PA 6, the alarm is checked during the brief interval the PA is used to set up a call.

  A PA POWER LOW ALARM may be accompanied by or caused by a tripped PA dc breaker. Refer to Appendix A, Section A.15.4, before resetting a tripped PA dc breaker.

- PA TO ANTENNA HIGH LOSS ALARM: Loss from forward PA to M2 (for PA 6) or M1 (for all others) was measured to be equal or greater than the PA to Antenna High Loss Alarm Point.

  This indicates a problem with the combiner, duplexer, or cabling. A mistuned combiner cavity will cause these alarms. Note: Check the connectors in the PA cage; sometimes, if not properly aligned, plugging in PAs will push the RF connector out of the housing.

  This alarm is checked for at power-on, restore-to-service attempts, and once per hour during operation. The alarm condition must persist for 2 seconds before an alarm is logged. Because the test requires that one PA at a time be keyed, the test is only conducted when no calls are up. If a new call is detected, the test is aborted. Each nondisabled board/PA is individually keyed, and the PA power reading is compared to the M2 (for board 6) or M1 (for all others) forward power reading.

  If the PA power minus the antenna power is equal or greater than the threshold, an alarm is logged. This alarm does not cause out-of-service on board or PA.

3.8 ALA (Alarm Report) Command (Continued)

System Alarm Conditions Reported:

- ROM ALARM: Problem in Read Only Memory. (Checked at power-up by computing a ROM checksum and comparing it with a stored checksum.)

- RAM ALARM: Problem in Random Access Memory. (Checked at power-up by writing distinguishable patterns to the entire external RAM and then checking for them. The ability to write all bits (both high and low) and non-shorted address lines is checked.)

- NOVRAM ALARM: Problem in Nonvolatile Memory. (Checked at power-up by looking for several "signature bytes" which indicate if data have ever been written and if gross memory loss has occurred. If a signature cannot be found, the system tries to write the defaults and the signature to the NOVRAM.)

  Alarm readings:
  - 0 = No problems.
  - 1 = Signature not found, but system was able to write it successfully. (All operating parameters will revert to their default values.) Software upgrades usually result in this reading, since different versions employ different signatures. Repeated occurrence indicates an intermittent NOVRAM.
  - 2 = Signature not found; system could not write the signature. Indicates faulty NOVRAM circuitry.

- SAT DETECTOR #1 AND #2 ALARMS: Problem with the SAT detection circuitry on the controller board, specifically, that the SAT PLL free running frequency cannot be adjusted to the desired point. SAT detector #1 is used for boards 1–6; #2 is used for boards 7–11. Most likely, this will cause calls on the associated boards to be dropped due to SAT Fade or Unsuccessful Setup. The direct symptoms can be temporarily bypassed by setting the SAT Fade Time-out to 250 seconds, which would allow a call to be boosted at least that long.

- SUPPLY VOLTAGE ALARMS: The +28, +12, or +6 Volt supply went below the associated Low Alarm Point. The voltages are monitored at the controller board, at PA 1–6 cage, and at PA 7–11 cage (if installed). A monitored supply voltage point must be in the alarm condition for at least 5 seconds before an alarm is logged. Shorter duration dips below the alarm points are ignored.

  - The +12 and +6 Volt alarms indicate problems with the associated dc-dc converter in the regulator module (which plugs into the back of the card cage) if they occur at all monitoring points, and/or problem with the power distribution wires or connectors if they occur at a single monitoring point.

3.8 ALA (Alarm Report) Command (Continued)

- The +28 Volt alarm may indicate several things, depending upon how the +28 Volt Supply - Low Alarm Point is set. The +28 volts is supplied by the large switching power supplies in the bottom of the cabinet. If external batteries are connected, they are parallel with the outputs of the switching supplies. If ac power is lost, the reading indicates the battery voltage, which drops according to battery capacity and EAC-2000 call activity.

  The +28V alarm point may be set close to +28 volts; in this case, a +28 volt alarm will be logged very quickly after c power is lost. The alarm point may be set lower, depending upon the particular battery voltage to remaining capacity relationship. In this case, the alarm will not be logged for short duration ac power outages, but will be logged when battery discharge is imminent. If the +28 Volt alarm point is set equal to the +28 Volt Supply - PA Power Cutback Point, the +28 Volt alarm will also indicate that the PAs were powered back due to low supply voltage.

- EXT. ANALOG ALARMS: Indicates the number of times the voltage on the general purpose analog input has gone above or below the threshold specified in the Ext. Analog Input Alarm State parameter. An external analog input alarm condition must persist for at least 1 second before an alarm is logged. Shorter durations are ignored.

- EXT. DIGITAL ALARMS: Indicates the number of times the input has been different from the Ext. Digital Input Alarm State parameter if enabled. An external digital input alarm condition must persist for at least 1 second before an alarm is logged. Shorter durations are ignored.

3.9 DCS (Display Call Statistics) Command

Entry: At the > prompt, enter **DCS <CR>**.

Purpose: Lists the total number and duration of calls handled per board.

- Separate totals are given according to reasons for call setup or termination.
- Statistics continue to accumulate indefinitely unless zeroed. (Statistics may be zeroed by entering **DCS=0**.

Figure 3-7 shows a sample DCS report. Listed statistics are described below.

Statistics Listed:

- NUMBER OF CALLS HANDLED - MOBILE ORIGINATED: Number of calls handled by the EAC-2000 that were set up because a mobile in the boosted coverage area placed a call. (These calls are processed through the boosted control channel; the booster identifies the mobile as a candidate for boosting by monitoring the data streams.)
- NUMBER OF CALLS HANDLED - MOBILE ANSWERED: Number of calls handled by the EAC-2000 that were set up because a mobile in the boosted coverage area answered a call. (These calls are processed through the boosted control channel; the booster identifies the mobile as a candidate for boosting by monitoring data streams.)
- NUMBER OF CALLS INITIATED - MOBILE RSSI > THRESH: Number of calls handled by the EAC-2000 that were set up because a mobile with a call up directly with the donor drove into the boosted coverage area. (The EAC-2000 identifies the mobile as a candidate for boosting because the RSSI on one of the channels in the donor voice channels lists goes above the hand-in threshold.)
- CALL TIME - MOBILE ORIGINATED: Total duration of all calls handled that were originated by a mobile in the booster coverage area. (In minutes, accurate to 1 minute.)
- CALL TIME - MOBILE ANSWERED: Total duration of all calls handled that were answered by a mobile in the booster coverage area. (In minutes, accurate to 1 minute.)
- CALL TIME - MOBILE RSSI > THRESH: Total duration of all calls handled that were answered by a mobile in the booster coverage area. (In minutes, accurate to 1 minute.)

Figure 3-7. Sample DCS Report

```
>dcs

  EXTEND-A-CELL CALL STATISTICS - SINCE *** 00-00-00 00:00:00  SCREEN 1

                     NUMBER OF CALLS HANDLED

                MOBILE         MOBILE         MOBILE         TOTAL
                  ORIG         ANSWER    RSSI>THRESH

BD 1                0              0              0             0
BD 2                3              5              1             9
BD 3                0              0              0             0
BD 4                0              0              0             0
BD 5                0              0              0             0
BD 7                0              0              0             0
BD 8                0              0              0             0
BD 9                0              0              0             0
BD 10               0              0              0             0
BD 11               0              0              0             0
TOTAL               3              5              1             9

Press RETURN when ready for more. .

  EXTEND-A-CELL CALL STATISTICS - SINCE *** 00-00-00 00:00:00  SCREEN 2

                     CALL TIME (MINUTES)

                MOBILE         MOBILE         MOBILE         TOTAL          AVERAGE
                  ORIG         ANSWER    RSSI>THRESH

BD 1                0              0              0             0              0.0
BD 2                2              3              4            10              1.1
BD 3                0              0              0             0              0.0
BD 4                0              0              0             0              0.0
BD 5                0              0              0             0              0.0
BD 7                0              0              0             0              0.0
BD 8                0              0              0             0              0.0
BD 9                0              0              0             0              0.0
BD 10               0              0              0             0              0.0
BD 11               0              0              0             0              0.0
TOTAL               2              3              4            10              1.1
AVERAGE           0.9            0.6            4.3           1.1

Press RETURN when ready for more . .

  EXTEND-A-CELL CALL STATISTICS - SINCE *** 00-00-00 00:00:00  SCREEN 3

                     NUMBER OF CALL TERMINATED

                MOBILE         MOBILE         MOBILE         DONOR          TOTAL
               RELEASE       SAT FADE    RSSI<THRESH   RSSI<THRESH

BD 1                0              0              0             0              0
BD 2                6              0              2             1              9
BD 3                0              0              0             0              0
BD 4                0              0              0             0              0
BD 5                0              0              0             0              0
BD 7                0              0              0             0              0
BD 8                0              0              0             0              0
BD 9                0              0              0             0              0
BD 10               0              0              0             0              0
BD 11               0              0              0             0              0
TOTAL               6              0              2             1              9

Press RETURN when ready for more . .
```

Figure 3-7. Sample DCS Report (Continued)

```
  EXTEND-A-CELL CALL STATISTICS - SINCE *** 00-00-00 00:00:00  SCREEN 4

                     NUMBER OF CALLS

                -- UNSUCCESSFUL SETUP --       SHORT
             ORIG+ANSW    RSSI>THRESH      DURATION
BD 1                 1              0             0
BD 2                 2              2             0
BD 3                 0              0             0
BD 4                 0              0             0
BD 5                 0              0             0
BD 7                 0              0             0
BD 8                 0              0             0
BD 9                 0              0             0
BD 10                0              0             0
BD 11                0              0             0
TOTAL                3              2             0

Press RETURN when ready for more . .


  EXTEND-A-CELL CALL STATISTICS - SINCE *** 00-00-00 00:00:00  SCREEN 5

NUMBER OF UNSUCCESSFUL ACCESS ATTEMPTS:. . . . . . . . . . . . . . . . . . . . 1
     EAC MULTI-HOP SIGNALING FAILED. . . . . . . . . . . . . . . . . . . . . . 0
     DONOR DENIED ACCESS TO CONTROL CHANNEL. . . . . . . . . . . . . . . . . . 0
     DONOR ISSUED NO RESPONSE MESSAGE. . . . . . . . . . . . . . . . . . . . . 1
     DONOR ISSUED DIRECTED RETRY . . . . . . . . . . . . . . . . . . . . . . . 0
     DONOR ISSUED REORDER OR INTERCEPT . . . . . . . . . . . . . . . . . . . . 0
     DONOR ISSUED RELEASE. . . . . . . . . . . . . . . . . . . . . . . . . . . 0
NUMBER OF CALL ATTEMPTS WHILE BUSY . . . . . . . . . . . . . . . . . . . . . . 0
NUMBER OF TIMES ALL EAC CHANNELS BUSY. . . . . . . . . . . . . . . . . . . . . 5
TIME ALL EAC CHANNELS BUSY (MINUTES) . . . . . . . . . . . . . . . . . . . . .37
NUMBER OF CALLS TRANSFERRED. . . . . . . . . . . . . . . . . . . . . . . . . 0
NUMBER OF HANDBACK GRABBACK ATTEMPTS THAT CONTINUED ON EAC . . . . . . . . .19
NUMBER OF DYNAMIC POWER CONTROL ACTIONS (POWER DECREASES) . . . . . . . . .12
NUMBER OF DYNAMIC POWER CONTROL ACTIONS (POWER INCREASES). . . . . . . . . 1
LAST EAC RESET   THU 10-28-93  16:53:33
```

- NUMBER OF CALLS TERMINATED - MOBILE RELEASE DETECTED: Number of calls terminated because mobile release was detected by the EAC-2000. Mobile release occurs if the mobile or land user hangs up. (Most calls should end because of mobile release, but some releases will be missed, especially in weak signal conditions. If release is missed or ignored, one of the other termination mechanisms should end the call.)

- NUMBER OF CALLS TERMINATED - MOBILE SAT FADED: Number of calls terminated because the SAT received by the EAC-2000 from the mobile was incorrect for the SAT Fade Timeout period. (Usually indicates that the mobile drove out of range of the booster and could not be handed back to the donor cell. Excessive terminations of this type will occur if mobile release is consistently missed.)

- NUMBER OF CALLS TERMINATED - MOBILE RSSI < THRESH: Number of calls terminated because the RSSI from the mobile fell below the hand-back threshold, and the EAC-2000 was able to hand the mobile back to the donor.

3.9 DCS (Display Call Statistics) Command (Continued)

- NUMBER OF CALLS TERMINATED - DONOR RSSI < THRESH: Number of calls terminated because the signal being received from the donor fell below the donor RSSI threshold for 2 seconds.

- NUMBER OF UNSUCCESSFUL SETUPS - ORIG+ANSW: Indicates that the mobile never arrives on the assigned voice channel. High numbers of these, along with high numbers of SAT fades, indicate a problem with the mobile-to-booster path or the board.

- NUMBER OF UNSUCCESSFUL SETUPS - RSSI>THRESH: Number of times the EAC-2000 tried to set up a mobile that was detected as having strong RSSI, but the mobile did not take the hand-off message. (This does not mean that the call ended, but merely that the donor cell continued to handle the call.)

  - Too many of this type for all boards may indicate one of the following:
    - Hand-in threshold too low.
    - Antennas facing the boosted coverage area also cover a significant portion of the donor cell coverage area. (This will cause the booster to falsely identify mobiles as candidates for boosting when they are in good contact with the donor cell.)
    - Intermod signal (with correct SAT) of sufficient strength on one of the channels in the donor voice channel list.

  - Too many for one board, and not others, indicates a problem with that board.

- NUMBER OF CALLS OF SHORT DURATION: Number of calls that lasted less than 10 seconds. A large number for all boards may indicate a coverage area overlap.

3.9 DCS (Display Call Statistics) Command (Continued)

- NUMBER OF UNSUCCESSFUL ACCESS ATTEMPTS: Number of call setups that were unsuccessful because the donor cell site did not assign a voice channel to the candidate.

  - EAC MULTI-HOP SIGNALING FAILED: Only applies when Modes 3 and 4 are selected in Multi-Hop Feature.
  - DONOR DENIED ACCESS TO CONTROL CHANNEL: Donor does not properly manipulate B/I bit.
  - DONOR ISSUED NO RESPONSE MESSAGE: Access was successful, but donor ignored.
  - DONOR ISSUED DIRECTED RETRY: Usually indicates that the donor is busy.
  - DONOR ISSUED REORDER OR INTERCEPT: Usually indicates that the donor is busy.
  - DONOR ISSUED RELEASE: Possible indication that the mobile is denied service due to authentication failure, but varies from system to system.

- NUMBER OF CALL ATTEMPTS WHILE BUSY: The number of accesses that were attempted in the EAC-2000 coverage area while all channels were busy. This statistic can only be logged if the Control Channel State During All Channels Busy parameter is set to BOOST ACCESSES, DENY ACCESSES BUT COUNT, or DIRECTED RETRY. If set to OFF or DENY ACCESSES, accesses will not occur during all busy (so they cannot be counted).

- NUMBER OF TIMES ALL EAC CHANNELS BUSY: Number of times that the last available board was used to set up a call, causing the EAC-2000 to be fully loaded. (See note on next page.)

- TIME ALL CHANNELS BUSY (MINUTES): Total time that all available boards were being used to boost calls. (See note on next page.)

- NUMBER OF CALLS TRANSFERRED (Revertive Control Channel Option only): Number of calls initially handled by the control channel equipment and subsequently transferred to voice channel equipment.

3.9 DCS (Display Call Statistics) Command (Continued)

☞ NOTE—REVERTIVE CONTROL CHANNEL OPTION:

If this option is enabled, some calls will be handled by the control channel equipment initially. Calls that are transferred to (normal) voice channel boards will be logged completely on that board (i.e., the statistics will log as if the call were initially handled on the voice pair). If a call is handled initially on the control channel and ends without being transferred, the statistics are logged on the control channel board.

If the Revertive Control Channel Option is enabled—

- NUMBER OF TIMES ALL CHANNELS BUSY: Number of calls initially handled by the control channel equipment. ("All busy" in this case is defined as "all available voice channels busy" + "control channel boosting a voice call.")

- TIME ALL CHANNELS BUSY: Time the control channel equipment was being used to boost a voice call.

- NUMBER OF CALLS HANDLED by the control channel board, the NUMBER OF CALLS TRANSFERRED, and the NUMBER OF TIMES ALL CHANNELS BUSY will not add up as might be expected because some calls handled on the control channel equipment may be detected as UNSUCCESSFUL SETUPS.

- NUMBER OF HANDBACK GRABBACK ATTEMPTS THAT CONTINUED ON EAC: During a call, if a mobile's RSSI falls below the Handback Threshold, a handback/grabback will be performed. The mobile is handed back to the donor voice channel, then another handback message is sent in competition with the signal from the donor. This second handback message is referred to as the grabback. If the donor signal is stronger, the mobile will remain on the donor channel; the call will end on the EAC-2000 and be logged in the MOBILE RSSI < THRESHOLD call terminate category. Of the EAC-2000 signal is stronger, the mobile will take the grabback; the call will continue on the EAC-2000 and a statistic will be logged here. A single call may result in several occurrences of this statistic.

  High numbers of this statistic (i.e., 2 to 3 times the total number of calls) indicates that the EAC-2000 is doing more handback/grabbacks than is needed. This can be reduced by decreasing the Handback Threshold, decreasing the Maximum Number of Handback Attempts Per Call, or increasing the Minimum Delay Between Handback Attempts.

3.9 DCS (Display Call Statistics) Command (Continued)

- NUMBER OF DYNAMIC POWER CONTROL ACTIONS (POWER DECREASES): Number of times a mobile's power level was decreased because it was too close to the booster. (Too many decreases could indicate that the Mobile Dynamic Power Control parameter is set too low.)

- NUMBER OF DYNAMIC POWER CONTROL ACTIONS (POWER INCREASES): Number of times a mobile's power level was increased after previously having been decreased. (Too many power increases and decreases may indicate that there is not enough difference between the Mobile Dynamic Power Control Threshold and the threshold that triggers power increase (hand-back threshold).

- LAST EAC RESET: Date and time of last reset. (If **ALA=0** has not been entered, this indicates how long the alarm counts reported in ALA have been accumulating.)

NOTE: A new EAC-2000 will show some amount of call activity in the DCS and DCH reports. This represents the results of factory burn-in testing. Enter **DCS=0** and **DCH=0** to clear these out.

3.10 DCH (Display Call History) Command

Entry: At the > prompt, enter **DCH <CR>**.

Purpose: To display incremental totals of certain call statistics. Figure 3-8 shows a sample DCH report.

- Totals are computed each hour and maintained in a week-long record. For the call history to be correct, the time must be accurate.

  Examples: NUMBER OF CALLS HANDLED listed for MON 5 is the total number of calls initiated for one hour on Monday, between 5:00 a.m. and 5:59 a.m. The entry for MON 22-4 includes calls between Monday 10:00 p.m. and Tuesday 4:59 a.m.

- DCH statistics are maintained in nonvolatile memory (i.e., a temporary power outage or a RES command will not destroy the week's history).

- To zero the statistics (all except the totals, which accumulate indefinitely), enter **DCH=0**.

NOTE: A new EAC-2000 will show some amount of call activity in the DCS and DCH reports. This represents the results of factory burn-in testing. Enter **DCS=0** and **DCH=0** to clear these out.

Statistics Displayed:

- TOTAL SYSTEM RUN TIME (HOURS): Number of hours the system (or at least the controller board) has been running. After being zeroed at the factory, this statistic accumulates indefinitely.

- TOTAL NUMBER OF CALLS HANDLED BY SYSTEM: Number of calls handled by the system (accumulates indefinitely).

- TOTAL CALL TIME HANDLED BY THE SYSTEM (MINUTES): Number of call minutes boosted by the system (accumulates indefinitely).

- NUMBER OF CALLS HANDLED: Number of calls initiated during the hour for all board pairs for all reasons.

- CALL TIME: Number of call minutes handled by the booster during the hour. (If nine boards are available for boosting, the total available call minutes during an hour is 9 x 60 = 540.)

Figure 3-8. Sample DCH Report

```
>dch

TOTAL EAC RUN TIME (HOURS). . . . . . . . . . . . . . . . . . . . .   5
TOTAL NUMBER OF CALLS HANDLED BY EAC. . . . . . . . . . . . . . . .   9
TOTAL CALL TIME HANDLED BY EAC (MINUTES). . . . . . . . . . . . . .   9

Press RETURN when ready for more . .
                    EXTEND-A-CELL HOURLY CALL HISTORY

NUMBER OF CALLS HANDLED BY EAC
      5   6   7   8   9   10  11  12  13  14  15  16  17  18  19  20  21  22-4
MON   0   0   0   0   0   0   0   0   0   0   0   0   0   0   0   0   0   0
TUE   0   0   0   0   0   0   0   0   0   0   0   0   0   0   0   0   0   0
WED   0   0   0   0   0   0   0   0   0   0   0   0   0   0   0   0   0   0
THU   0   0   0   0   0   0   0   0   0   0   0   0   0   0   0   0   0   0
FRI   0   0   0   0   0   0   0   0   0   0   0   0   0   0   0   0   0   0
SAT   0   0   0   0   0   0   0   0   0   0   0   0   0   0   0   0   0   0
SUN   0   0   0   0   0   0   0   0   0   0   0   0   0   0   0   0   0   0

CALL TIME HANDLED BY EAC (MINUTES)
      5   6   7   8   9   10  11  12  13  14  15  16  17  18  19  20  21  22-4
MON   0   0   0   0   0   0   0   0   0   0   0   0   0   0   0   0   0   0
TUE   0   0   0   0   0   0   0   0   0   0   0   0   0   0   0   0   0   0
WED   0   0   0   0   0   0   0   0   0   0   0   0   0   0   0   0   0   0
THU   0   0   0   0   0   0   0   0   0   0   0   0   0   0   0   0   0   0
FRI   0   0   0   0   0   0   0   0   0   0   0   0   0   0   0   0   0   0
SAT   0   0   0   0   0   0   0   0   0   0   0   0   0   0   0   0   0   0
SUN   0   0   0   0   0   0   0   0   0   0   0   0   0   0   0   0   0   0

Press RETURN when ready for more . .

NUMBER OF CALL ATTEMPTS WHILE ALL CHANNELS BUSY
      5   6   7   8   9   10  11  12  13  14  15  16  17  18  19  20  21  22-4
MON   0   0   0   0   0   0   0   0   0   0   0   0   0   0   0   0   0   0
TUE   0   0   0   0   0   0   0   0   0   0   0   0   0   0   0   0   0   0
WED   0   0   0   0   0   0   0   0   0   0   0   0   0   0   0   0   0   0
THU   0   0   0   0   0   0   0   0   0   0   0   0   0   0   0   0   0   0
FRI   0   0   0   0   0   0   0   0   0   0   0   0   0   0   0   0   0   0
SAT   0   0   0   0   0   0   0   0   0   0   0   0   0   0   0   0   0   0
SUN   0   0   0   0   0   0   0   0   0   0   0   0   0   0   0   0   0   0

TIME ALL EAC CHANNELS BUSY (MINUTES)
      5   6   7   8   9   10  11  12  13  14  15  16  17  18  19  20  21  22-4
MON   0   0   0   0   0   0   0   0   0   0   0   0   0   0   0   0   0   0
TUE   0   0   0   0   0   0   0   0   0   0   0   0   0   0   0   0   0   0
WED   0   0   0   0   0   0   0   0   0   0   0   0   0   0   0   0   0   0
THU   0   0   0   0   0   0   0   0   0   0   0   0   0   0   0   0   0   0
FRI   0   0   0   0   0   0   0   0   0   0   0   0   0   0   0   0   0   0
SAT   0   0   0   0   0   0   0   0   0   0   0   0   0   0   0   0   0   0
SUN   0   0   0   0   0   0   0   0   0   0   0   0   0   0   0   0   0   0
```

- NUMBER OF CALL ATTEMPTS WHILE BUSY: The number of accesses that were detected in the EAC-2000 coverage area while all channels were busy. The hourly record is shown for this if the Control Channel State During All Channels Busy parameter is set to BOOST ACCESSES, DENY ACCESSES BUT COUNT, or DIRECTED RETRY.

- NUMBER OF TIMES ALL CHANNELS BUSY: (Displayed if the Control Channel State During All Channels Busy is set to OFF or DENY ACCESS, because for those settings, accesses do not occur.) Indicates the number of times that the last available board was used to set up a call during the hour, causing the EAC-2000 to be fully loaded.

- TIME ALL CHANNELS BUSY: Total time (in minutes) that all available boards were being used to boost a call during the hour.

3.11 TIM (Time Display and Change) Command

Entry: From the > prompt, enter **TIM <CR>**.

Purpose: To display and change the time and date on the EAC-2000 clock. The EAC-2000 uses this clock to determine (1) when to update the incremental statistics kept for the DCH command and (2) which records to update.

The clock circuitry is located on the controller board. The clock has lithium battery backup with 10 years minimum battery life. Accuracy is ±1 minute at 25ºC. The unit properly maintains the date, even during leap years.

Figure 3-9 shows a sample TIM screen.

Figure 3-9. Sample TIM Screen

```
>tim

Currently  WED  08-02-94  10:13:04
Enter new time (HH:MM)  :  10:25
Enter new date (MM_DD_YY)  : 8-2-94
Enter number for new day (1=MON, 2=TUE ... 7=SUN)  :  3
Currently  WED  08-02-94  10:25:33

>
```

3.12 MIN (Mobile ID Number) Command

Entry: From the > prompt, enter **MIN <CR>**.

Purpose: To display a listing of the last five mobile-answered or mobile-originated access attempts by mobiles.

The EAC-2000 decodes both mobile and cell site control channel data upon call origination or answer. It then keeps track of channel assignments by the mobile telephone number (MIN) which is part of every data transmission. The MIN received from the mobile and the donor channel assignment sent by the cell site is available as a troubleshooting aid through the MIN command.

Like the SCS display, the MIN display is a refreshed listing of the last five access attempts. Each listing includes the 10-digit MIN, type of access (mobile-originated or mobile-answered), and activity.

Figure 3-10 shows a sample MIN screen.

Figure 3-10. Sample MIN Screen

```
A>min

MIN             ACTIVITY
8015606385      MOBILE ANSWERED CALL      DONOR CHAN = 245
8015601407      MOBILE ORIGINATED CALL    DONOR CHAN = 308
8015609843      MOBILE ORIGINATED CALL    DONOR CHAN = 56
8015605627      MOBILE ANSWERED CALL      DONOR CHAN = 98
8015609843      MOBILE ORIGINATED CALL    DONOR CHAN = 203
```

The chart on the next page explains the Activities that may occur.

3.12 MIN (Mobile ID Number) Command (Continued)

Activity	Meaning
DONOR CHAN = XXX	Most often displayed; indicates that the access was repeated, and the donor assigned a channel.
NOT BOOSTED - DONOR ISSUED RELEASE NOT BOOSTED - DONOR ISSUED REORDER NOT BOOSTED - DONOR ISSUED INTERCEPT NOT BOOSTED - DONOR ISSUED DIRECTED RETRY	These indicate that the access was repeated and received by the donor, but that the donor responded with the indicated message. These messages from the donor are used in various ways by different system manufacturers, but most often indicate that the cell site was busy, that there was a problem with the dialed number, or that the subscriber was not validated.
NOT BOOSTED - DONOR DENIED ACCESS	In this case, a valid access or page response was received by the EAC-2000, but when the EAC-2000 tried to access the donor, the donor denied the access (i.e., did not flip the B/I bit properly). This could be because the donor is busy or could indicate a problem in the EAC-2000 to donor reverse control channel path or equipment.
NOT BOOSTED - DONOR ISSUED NO RESPONSE	In this case, a valid access or page response was received by the EAC-2000, and repeated to the donor, but the donor failed to respond within the maximum allowable time (5 seconds). This could indicate a busy cell site, or could also indicate EAC-2000 to donor reverse control channel problems.
NOT BOOSTED - STATION POWER CLASS = 1	Indicates that the EAC-2000 did not boost the mobile because of the mobile's power class, which is also displayed. This action is controlled by the Station Power Class Selective Boosting parameter.

3.13 REV (Show Hardware Revisions) Command

Entry: From the > prompt, enter **REV <CR>**.

Purpose: To display a listing of hardware revisions of the various assemblies in the EAC-2000. Also shows the RF board software revision, date code, and serial number.

Section 4. Special Commands

4.1 Introduction

In addition to the commands for system setup and monitoring (described in Sections 2 and 3), there are special commands intended for hardware verification. These lower-level commands are less "user friendly" than the commonly used commands; their use requires detailed knowledge of the hardware and software. However, they are more flexible and therefore more powerful.

WARNING!! It is not recommended that these commands be used in the field. Contact Allen Telecom Systems, Systems Engineering Department, before using them.

4.2 Commands

A summary of these commands is given below. In the command syntax shown—

- Each command is entered at the > prompt.
- A, B, and C represent hex data to be entered.
- Brackets [ ] enclose optional entries.

Entry	Purpose
RFC	Invokes a mode (signified by a # prompt) which allows communication with the RF boards directly. The protocol used is beyond the scope of this document. This command must be used with caution because it could destroy personality and calibration data stored on the RF boards. Exit this command using ESC.
RUN AAAA	Causes program execution to begin at location AAAA in EPROM.
CBY AAA[-BBBB]	Displays Code BYte[s] (i.e., in EPROM) from location AAAA [to BBBB] in hex.

4.2 Commands (Continued)

Entry	Purpose
DBY AA[-BB][=CC]	Displays Data BYte[s] in internal RAM from hex location AA [to location BB], or if =CC is included, changes the bytes in the range to CC in hex.
XBY AAAA[-BBBB][=CC]	Displays/changes eXternal memory BYtes or memory mapped i/o in the range from AAAA [to BBBB].
CHK	Computes and displays the CHecKsum of program memory (i.e., uses the move instruction) and also displays the stored checksum.
WRP AAAA[=BB]	Creates a continuous WRite Pulse to external memory location AAAA; data written is 55 hex or BB hex if included. Exit this command by pressing ESC.
RDP AAAA[-BBBB]	Creates a continuous ReaD Pulse to external memory locations in the range AAAA [to BBBB], and displays the values read on the screen (max of 15 locations displayed). Exit by pressing ESC.
WAT	Causes pulsing of the WATchdog timer to be suspended, thus allowing it to expire. A power-on reset should follow shortly.

AMPS
EAC-2000™ Manual

Volume 3
Technical Information

27-7657-2

Issue 7/95

© Copyright 1995 The Antenna Specialists Co.
All Rights Reserved

ALLEN TELECOM GROUP
SYSTEMS DIVISION™

Field Support

If you need technical assistance with the EAC-2000™, contact Allen Telecom Systems at one of the following telephone numbers:

Extend-A-Cell HOTLINE:		(800) 800-EAC4 (3224)
	or	(216) 349-8413
Systems Engineering Department:		(216) 349-8413

Contents

Page

List of Figures and Diagrams v

1. Introduction 1-1

1.1 About This Volume 1-1
1.2 Introduction to Cellular Boosters 1-2
1.2.1 Use of Cellular Boosters 1-2
1.2.2 Frequency Allocation Plan 1-4

2. EAC-2000™ Description 2-1

2.1 Introduction 2-1
2.2 EAC-2000 Concept 2-1
2.2.1 Control Channel Amplifiers 2-1
2.2.2 Voice Channel Amplifiers 2-2
2.3 EAC-2000 Operation 2-3
2.3.1 Antennas 2-3
2.3.2 Forward Path Operation 2-4
2.3.3 Reverse Path Operation 2-4
2.3.4 Hand-off Messages 2-5
2.4 System Board Functions 2-6
2.4.1 RF Boards 2-6
2.4.2 Backplane Board 2-7
2.4.3 Forward Preamp 2-8
2.4.4 Reverse Preamp 2-8
2.4.5 Reverse Combiner 2-8
2.4.6 45-Watt PA 2-8
2.4.7 PA Interface Board 2-9
2.4.8 Mobile Shelf 2-9
2.4.9 Power Supply 2-9
2.5 How Calls Are Processed 2-10
2.5.1 Calls Placed/Answered from Within Booster Coverage Area 2-10
2.5.2 In-Progress Calls Entering the Booster Coverage Area . 2-11
2.5.3 Hand-backs 2-12

Page

2. EAC-2000™ Description (Continued)

2.6 Multi-Hop Operation 2-14
2.6.1 Control Channel Response or Access 2-14
2.6.2 Repeating the Response or Access 2-15
2.7 Local/Remote Link 2-16
2.7.1 Local Link 2-16
2.7.2 Remote Link 2-16
2.8 Programmable Parameters 2-16
2.9 Alarms 2-16

3. Specifications and Drawings 3-1

3.1 Specifications 3-1
3.2 Equipment Characteristics 3-5
3.2.1 Accessories 3-5
3.2.2 Interchangeability 3-5
3.2.3 Compliance with Standards 3-5
3.2.4 Reliability 3-7
3.2.5 Service Skills Required for the EAC-2000 3-7
3.3 EAC-2000 Illustrations 3-8
3.4 EAC-2000 Diagrams 3-8

List of Figures and Diagrams

Figures **Page**

1-1. Cellular Booster Operation 1-3
1-2. Channel Assignment and Frequency Allocation 1-4
2-1. EAC-2000 Concept 2-2
2-2. RF Board Block Diagram 2-7
3-1. Specifications 3-1
3-2. EAC-2000, Front View (Door Removed) 3-12
3-3. EAC-2000, Back View (Door Removed) 3-13
3-4. Regulator Module Wiring Diagram 3-15
3-5. AMPS Power Supply Shelf Wiring Diagram 3-17

EAC-2000 Diagrams

In addition, the following foldout diagrams are included in this section:

- Block Diagram
- Main Harness Wiring Diagrams
- Card Cage Wiring Diagram
- Backplane Wiring Diagram
- PA Cage Wiring Diagram
- Mobile Shelf Wiring Diagram

Section 1. Introduction

1.1 About This Volume

This volume is the third of three volumes pertaining to the AMPS EAC-2000™ booster. It contains descriptions, specifications, and drawings for the EAC-2000. Volume 1 includes installation procedures, and Volume 2 contains operating procedures. A set of appendices, a glossary, an index and a parts and accessories order information section accompany the three volumes.

This volume has been divided into three sections, described below.

- Section 1. Introduction: Outlines the contents of this volume, defines key terms, and provides an overview of cellular boosters.

- Section 2. EAC-2000 Description: Describes EAC-2000 operation, including the operational concept, functions of each of the system boards, and how calls are processed.

- Section 3. Specifications and Drawings: Provides specifications for power, environment, mechanical, interface, RF, and alarm/control connections. Describes equipment characteristics, and provides illustrations and diagrams.

1.2 Introduction to Cellular Boosters

1.2.1 Use of Cellular Boosters

Cellular telephone systems transmit signals in two directions between cell sites and mobile telephones within the signal coverage area. The signal path from the cell site to the mobile is called the forward path, and the path from mobile to cell site is the reverse path.

Weak signal transmissions may occur within the coverage area because of indoor applications, terrain obstructions, or distance from the transmitter. For example—

- Within a large building, signals may be marginal because of signal attenuation by the building or because subscribers are on lower floors.
- Steep terrain may shield a portion of the coverage area, causing unsatisfactory signal levels.
- Coverage of a rural highway may be unsatisfactory because of its distance from the cell-site transmitter.

One solution in these situations is to add more cell sites. However, in low-traffic areas, a signal booster may be a much less expensive way to extend the transmission range. As shown in Figure 1-1, the booster has an amplifier in each cell-site/mobile path, which receives the signal, amplifies it, and reradiates it.

The range is extended by the gain of the receiving and transmitting antennas and of the booster amplifier itself. Also, the path from the cell site to the booster is typically line-of-sight and therefore has very low propagation loss when compared to the typical path to a mobile.

Figure 1-1. Cellular Booster Operation

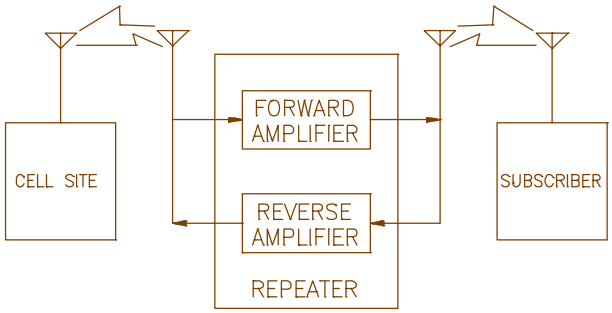

1.2.2 Frequency Allocation Plan

Cellular frequencies for AMPS-compatible systems are allocated as shown in Figure 1-2. Frequencies 824–849 MHz are used for reverse path transmissions, and 869–894 MHz are used for forward path transmissions. These bands of frequencies are divided into 666 full-duplex channel pairs, each 30 kHz wide. The channels are divided between two independent systems (A and B), each system receiving 333 channels. Of the 333 channels, 21 are control channels and 312 are voice channels. The control channels for the A and B systems are next to each other in the center of the band.

The expanded band segments (A', A", and B") provide an additional 2.5 MHz of bandwidth to each licensee. The nonwireline Band A expansion is provided in two segments: a 1.5 MHz segment (A') above the B band and a 1 MHz segment ((A") below the A band. The entire 2.5 MHz wireline band B expansion is above the A' segment. The formulas for calculating AMOS frequencies from channel numbers are provided in Figure 1-2.

Figure 1-2. Channel Assignment and Frequency Allocation

Band Designation	Channel Numbers		Mobile Transmit Frequency		Land Transmit Frequency	
Band A"	991	1023	824.040	825.000	869.040	870.000
Band A Voice	1	312	825.030	834.360	870.030	879.360
Band A Control	313	333	834.390	834.990	879.390	879.990
Band B Control	334	354	835.020	835.620	880.020	880.620
Band B Voice	355	666	835.650	844.980	880.650	889.980
Band A’	667	716	845.010	846.480	890.010	891.480
Band B’	717	799	846.510	848.970	891.510	893.970

Computing frequencies: For a given channel, the frequencies may be computed as follows:

	Channel Number	Center Frequency, MHz
Forward:	$1 \le N \le 7998$	0.03N + 870.000 MHz
	$991 \le N \le 1023$	0.03 (N-1023) + 870 MHz
Reverse:	$1 \le N \le 799$	0.03N + 825.000 MHz
	$991 \le N \le 1023$	0.03 (N-1023) + 825 MHz

Section 2. EAC-2000™ Description

2.1 Introduction

This section of the manual describes and illustrates the EAC-2000 design concept and operation and provides descriptions of the various system boards.

2.2 EAC-2000 Concept

The EAC-2000 booster uses 21 separate narrowband amplifiers. The simplified diagram in Figure 2-1, shows 4 narrowband amplifiers: 2 (forward and reverse) for the control channel and 2 (forward and reverse) for the voice channel.

2.2.1 Control Channel Amplifiers

A forward amplifier boosts and translates the frequency of the control channel transmitted from the donor cell site to the mobiles. A reverse amplifier boosts and translates the frequency of the control channel transmitted from the mobiles to the donor cell site.

The narrowband amplifiers are a single channel (30 kHz) wide and have dual synthesizers that control input and output channels independently. For example, if the cell site, the EAC-2000, and the mobiles in the primary coverage area communicate on control channel 340, the EAC-2000 could be set up to receive control channel 340, amplify it, and reradiate it on channel 335. The mobiles in the booster coverage area that are unable to receive channel 340 would lock onto channel 335 and communicate with the cell site through the EAC-2000. The translated control channel is referred to as the boosted control channel.

This concept of control channel translation is possible because the mobiles lock onto the strongest control channel. This is significant because the mobiles will receive only one signal, even if on the fringe of the weak coverage area. Therefore, there is no interfering signal.

Figure 2-1. EAC-2000 Concept

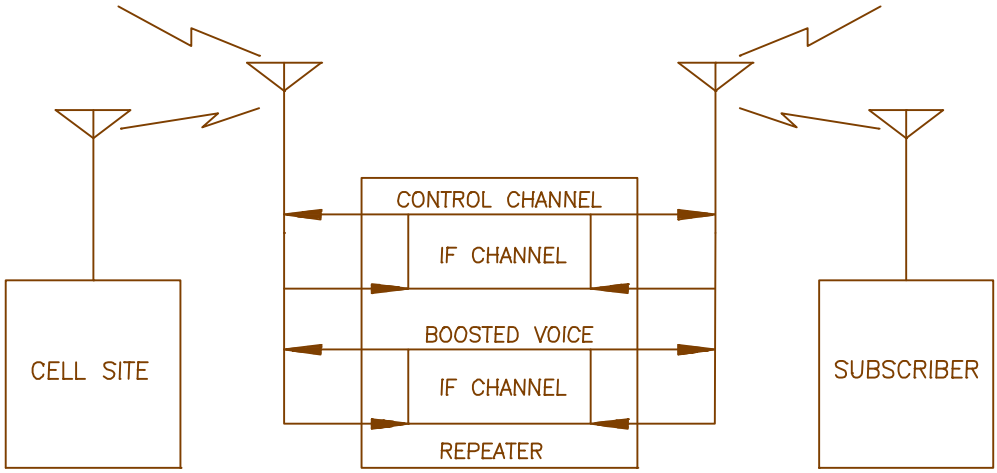

2.2.2 Voice Channel Amplifiers

The EAC-2000 also contains narrowband forward and reverse amplifiers for boosting voice channels. These amplifiers, which are keyed as needed when voice channel activity is detected in the boosted coverage area, translate the frequency of the boosted signal. When a mobile is detected in the coverage area, a voice channel booster is set up, and a hand-off message is sent to the mobile, causing it to switch to the boosted voice channel.

2.3 EAC-2000 Operation

Several aspects of EAC-2000 operation are described in this section:

- Antennas
- Forward path operation
- Reverse path operation
- Hand-off messages

Refer to the block diagram at the end of Section 3 in conjunction with the written descriptions.

2.3.1 Antennas

The EAC-2000 uses four antennas:

- D1 antenna *(lower right corner of block diagram)*: Primary antenna facing donor cell site(s), used for:
  - Reception of control and voice channel signals from donor cell site(s).
  - Transmission of control and voice signals back to cell site(s).

- M1 antenna *(lower left corner of block diagram)*: Primary antenna facing mobiles in the booster coverage area, used for:
  - Transmission of boosted control channel and boosted voice channels to mobiles.
  - Diversity reception from mobiles.

- M2 antenna *(center bottom of block diagram)*: Second antenna facing mobiles in the booster coverage area, used for:
  - Sending hand-off messages to mobiles.
  - Diversity reception from mobiles.
  - Sending control data to Multi-Donor Units, when installed

- Mobile antenna *(not shown)*: Antenna for the installed cellular mobile, facing the donor cell site.

2.3.2 Forward Path Operation

RF signals transmitted by the cell site (on both control and voice channels) are received at the D1 antenna and passed through the duplexer to the forward preamplifier. The forward preamp amplifies the signal and provides RF output to the narrowband forward receiver of the RF boards.

The signals coming out of the forward transmitter of each RF board are fed to a 45-watt power amplifier (PA). The PA outputs are combined in a transmit combiner. Note that the output channels for the forward direction are fixed by this combiner. The output of the combiner is fed to another duplexer, which is coupled to the M1 antenna facing the desired coverage area.

2.3.3 Reverse Path Operation

The reverse path through the system, starting with signals transmitted by the mobiles and received at the M1 antenna, is similar to the forward path. The reverse preamp has an additional RF input from the M2 antenna. Each RF board attached to the preamp can individually select the M1 or the M2 input as part of a diversity algorithm.

An important difference between the two paths is in the output power capability. The forward path employs separate 45-watt PAs, which are combined through a conventional transmit combiner. PAs 1–5 and 7-11 must operate on the fixed channel to which their associated combiner cavity is tuned. By contrast, the reverse path signals are amplified on each board and passively combined in a reverse combiner assembly, allowing the reverse transmitted signals to operate on any channel.

The reverse signals operate at a much lower power level, however, because the link between the cell site and the EAC-2000 is fixed (and probably line-of-sight), whereas the link between the EAC-2000 and mobiles is not as reliable. A balanced system (that is, a system with similar forward and reverse gains) requires higher power PAs in the forward direction. In addition, since the signal from the mobiles may be weak, diversity is employed by the reverse path receivers on each RF board.

2.3.4 Hand-off Messages

The sixth RF board is used for scanning and sending handoff messages.

- The reverse path **receive** portion is used to scan the donor voice channels for mobiles that may enter the booster coverage area.

- The forward path **transmit** portion of this board is connected to a 45-watt PA 6, which is connected to the M2 antenna duplexer. Since this path is not combined, the hand-off/locating board can transmit with high power level on any channel. This capability is used to send hand-off messages to mobiles, causing the mobile to tune to one of the fixed forward channels associated with boards 1–5 and 7–11.

- Board 6 is also used as a backup control channel booster.

2.4 System Board Functions

The EAC-2000 system includes the following boards:

- RF boards
- Backplane board
- Controller board
- Forward pre amp
- Reverse pre amp
- Reverse combiner
- 45-watt power amplifier
- DC-DC converter shelf
- PA interface
- Mobile shelf

2.4.1 RF Boards

Figure 2-3 shows a more detailed block diagram of one RF path on the RF boards. Forward and reverse paths differ only in tuning.
In the forward direction, one of the signal paths from the preamp board is fed to a mixer/synthesizer on the narrowband forward path. The signal is translated down to the 45 MHz intermediate frequency (IF), where it is further filtered and amplified. The IF filter is one channel (30 kHz) wide, allowing only the selected channel to be amplified. After passing through the IF filter, the signal is translated back up by another mixer/synthesizer. Since the two synthesizers are not tied together, the receive and transmit channels can be set independently.

A microcontroller on the narrowband boards controls all outputs (input channel, output channel, gain, and antenna select output), monitors inputs (RSSI and synthesizer lock), runs the diversity algorithm and detects signaling tone.

Figure 2-3. RF Board Block Diagram

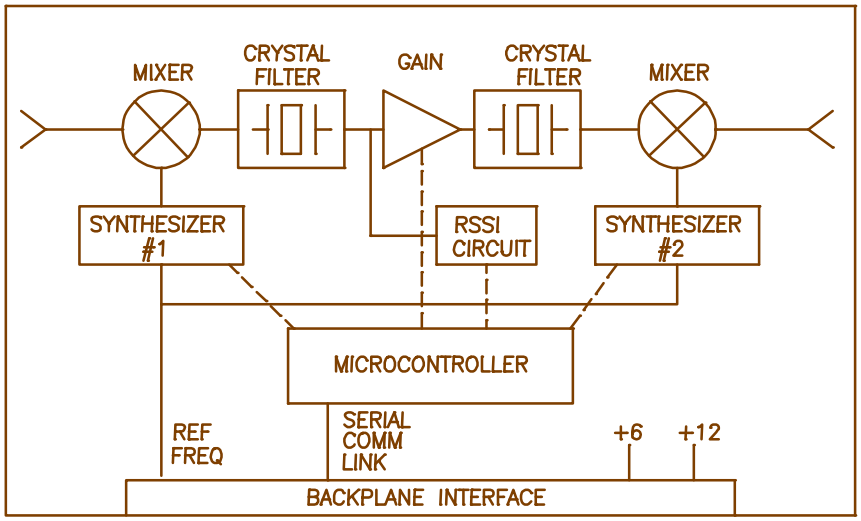

2.4.2 Controller Board

The controller board contains—

- Controller microprocessor
- 128 kilobytes of EPROM
- 32 kilobytes of nonvolatile RAM
- Watchdog timer
- RS-232 interface
- Reference oscillator

Because all system parameters (e.g., channel numbers, gains) are stored in non-volatile RAM, the system will resume operation after a power outage in the same state as before the outage. The RS-232 interface connects a serial port to a local terminal. Monitor software allows system parameter entry and system monitoring.

2.4.2 Backplane Board

The RF boards and the controller board plug into the backplane board. Connectors on the backplane connect dc and RF with the rest of the system.

2.4.3 Forward Preamp

The forward preamp board receives input from the D1 antenna via the D1 duplexer. The board amplifies then splits the signal, providing output to each of the 11 RF boards. The board has net loss of 7 dB typical. The amplifier section is designed for high intercept point.

2.4.4 Reverse Preamp

The reverse preamp board receives input from the M1 and M2 antennas via duplexers. The board amplifies and splits both signals. Each RF board has a control line connecting to the reverse preamp that controls which signal is used (M1 or M2). The reverse preamp is designed for good sensitivity and provides about 11 dB gain typical.

2.4.5 Reverse Combiner

The reverse combiner is entirely passive and broadband. Signals from the reverse transmitter of the RF boards are fed in at about +33 dBm. The signals are passively combined to a single output with net loss about 12 dB.

2.4.6 45-Watt PA

The 45-watt PA is a standard base station design with added front end gain. The unit has a pot on the front which allows the power output to be manually adjusted downward 7 to 10 dB. The PA also has three digital inputs (only two are used) which allow digital setting of the power output to one of four steps:

- Step 0 = full power
- Step 1 = 4 dB down
- Step 2 = 8 dB down
- Step 3 = 12 dB down

The PA has forward power sense and temperature sense outputs.

2.4.7 PA Interface Board

Each PA cage may contain up to six 45-watt PAs and will contain one PA interface board. The purpose of this board is to condense the numerous control and sense leads required for the PAs to a relatively low number of wires, which are connected to the controller board via the cabinet harnessing. This board can be viewed as an "I/O Expander" which is fully controlled by the controller board.

The PA interface board has power control outputs to each PA, a temperature sense, and forward power sense coming from each PA.

The PA interface board also contains some undedicated outputs and inputs which are routed to the external alarms/controls connector at the back of the PA cage.

2.4.8 Mobile Shelf

The mobile shelf contains—

- Interface to cellular mobile
- External dialer modem

This setup allows remote control of the system via the mobile. The system can be set up to initiate a call over this link when an alarm condition occurs.

2.4.9 Power Supply

The power supply system consists of—

- Dual switching 28 volt supplies (supply power for the PAs and for dc-dc converters)
- 28-to-12 volt dc-dc converter (supplies power for the RF portions of the boards)
- 28-to-6 volt dc-dc converter (supplies power for the logic portions of the system)

The dc-dc converters are contained in the regulator module.

2.5 How Calls Are Processed

The EAC-2000 is capable of boosting up to 10 channels at once, while the donor cell may employ 15 or more channels. The EAC-2000's call processing algorithms dynamically allocate the RF boards to service only mobiles in the booster coverage area.

The EAC-2000 identifies mobiles in the booster coverage area by two methods: one for identifying mobiles that place or answer calls from within the booster coverage area and another for identifying mobiles that enter the area with a call in progress.

2.5.1 Calls Placed/Answered from Within Booster Coverage Area

To identify calls placed or answered from within the booster coverage area, the EAC-2000 monitors the data streams on the boosted control channel, both forward and reverse. When a mobile that is not engaged on a call drives into the booster coverage area, it normally rescans and locks onto the strongest control channel (the boosted control channel). If, once inside the booster coverage area, that mobile places or answers a call, the following sequence occurs:

1. The mobile accesses the reverse boosted control channel. The EAC-2000 receives the access, then accesses the reverse donor control channel.

    - The EAC-2000 waits for the corresponding voice channel designation message on the forward channel.

    - The EAC-2000 modifies the voice channel designation message by substituting one of its boosted voice channels for the donor voice channel, thus sending the mobile to one of the boosted voice channels.

2. A boost path is set up between the mobile and the primary donor cell site, with the mobile operating on the boosted voice channel, the donor operating on the donor voice channel, and the EAC-2000 translating and boosting between the two.

The primary donor cell is defined as the cell site whose control channel the EAC-2000 is boosting. All mobiles that originate or answer calls through the EAC-2000's boosted control channel will be boosted back to the primary donor cell.

2.5.2 In-Progress Calls Entering the Booster Coverage Area

Scanning Donor Voice Channels. To identify mobiles that may drive into the boosted coverage area with a call in progress (i.e., already on a voice channel), the EAC-2000 scans the donor voice channel in the mobile transmit band and maintains an RSSI average for each channel. If the average RSSI exceeds a preset **hand-in threshold**, and the SAT on the channel is correct, the mobile on that channel is considered a candidate.

Handing In. Once a candidate is identified, the EAC-2000 forces the mobile to one of the boosted voice channels. To do this, the transmit portion of the hand-off/locating board (board 6) and PA 6 is used to send a hand-off message to the mobile. A boost path is set up for that channel in the same fashion as if the candidate had been identified by decoding the data streams.

Multiple Neighboring Cells. To provide for situations in which in-progress calls may be linked to various neighboring cell sites, the monitoring system allows for entry of three separate **donor voice channel lists**, one for each possible SAT frequency.

- If the booster is adjacent to a single cell site, the control channel of that cell site is the **donor control channel**. The voice channels used in that cell site may be entered into the donor voice channel list with the SAT of that cell site to handle mobiles that drive between the donor and booster with a call up.
- If the booster is adjacent to several cell sites, the voice channels of all the neighboring cells are entered into the scan list with the SAT of the neighboring cells. The control channel of one of the cell sites is chosen as the donor control channel, and this cell is then referred to as the **primary donor cell**.

Boosting the Call. As noted earlier, calls placed or answered from within the booster coverage area (and identified by decoding data streams) are boosted back to the primary donor cell. By contrast, in-progress calls identified by the channel scanning process are **boosted back to the cell on which the call was originally set up**. That is, if a mobile drives in with a call-up to a neighboring cell, the EAC-2000 will boost the call back to that neighbor. This means that the RF path between the EAC-2000 and any possible donor must support booster operation.

Note that if multiple donors are used, the D1 antenna system at the EAC-2000 must be specially designed for this operation. Specifically, signal strength at the D1 antenna must be close to identical (within ±2 dB) from all possible donor cell sites.

2.5.3 Hand-backs

Once a booster pair has been set up, the EAC-2000 monitors for one of the following conditions to determine when to hand back the mobile (that is, take down the booster on that channel):

- SAT fade
- Mobile release (1.8 seconds of signaling tone on the reverse voice channel)
- Weak mobile RSSI (RSSI received from the boosted mobile goes below a preset hand-back threshold)
- Weak donor RSSI

Weak mobile RSSI identifies the mobile as a hand-back candidate. Once a hand-back candidate is identified, the EAC-2000 sends the mobile a hand-off message directing it back to the original donor voice channel. This allows the mobile to be covered as it drives out of the booster coverage area back into the donor cell site coverage area.

Mobiles Heading Away from the Donor Cell. Sometimes a mobile leaving the booster area will drive out of cellular coverage. In this situation, handing the mobile back to the original donor cell would result in a weaker or nonexistent signal.

To handle this situation, the EAC-2000 uses the grab-back process. Shortly after sending the hand-off message, the EAC-2000 tries to hand the mobile back to the booster by sending it a second hand-off message (called a grab-back message) directing the mobile to come back to the boosted voice channel. When the grab-back message is sent, however, the mobile (because of the first hand-off message) is on the donor voice channel and possibly is receiving signal from the donor cell site.

- If the signal from the donor is stronger than the signal from the EAC-2000, the mobile will ignore the grab-back message and remain on the donor voice channel. The EAC-2000 will then free up the equipment it was using to boost the call, since the mobile is now being handled directly by the donor.

- If the EAC-2000 signal is stronger during the grab-back message (as would be the case if the mobile were driving away from the EAC-2000 but not toward the donor cell that was handling the call), the mobile will come back to the booster voice channel, and the EAC-2000 will continue to boost the mobile.

2.5.3 Hand-backs (Continued)

The entire hand-back/grab-back process takes only about 500 milliseconds. Once a mobile comes back to the booster after a hand-back/grab-back, that mobile will not be considered a hand-back candidate again for several seconds (a programmable parameter), regardless of its signal level. The EAC-2000 will periodically send hand-back/grab-backs but continue to handle the mobile until the signal level is unusable.

Hand-offs to a New Cell. If a mobile being boosted back to one donor cell drives toward another donor cell, a dilemma occurs. The serving cellular system thinks the mobile is on one voice channel, while the booster actually has it translated to another channel.

The signal level from the booster to the donor is set such that it is below the donor's hand-off candidate threshold. The donor will thus always identify the boosted mobile as a candidate for hand-off, and the cellular system will try to find the mobile in the cell sites adjacent to the donor. Since the mobile is actually on the booster's translated voice channel, it will not be seen in any cell site, so a system hand-off will not occur.

A solution is to provide a means for the adjacent cell sites to see the mobile on the voice channel that the cellular system thinks it is on. Once this is accomplished, the cellular system can determine which adjacent cell the mobile is driving into, assign a voice channel in that cell, and then send a hand-off message for the mobile to go to that channel.

This can be achieved by placing a reverse-translating **Multi-Donor Unit** (Allen Telecom Systems) at each of the cell sites adjacent to the booster. The unit is connected to the cell-site receive antennas to scan for boosted mobiles and then translate those mobiles back to the donor's voice channel for presentation to the cell-site locating receiver.

The Multi-Donor Units must know the relationships in effect between boosted and donor channels for calls being handled by the EAC-2000 booster(s). This is accomplished by data signaling between the EAC-2000 and any adjacent Multi-Donor Units on a booster link channel.

2.5.3 Hand-backs (Continued)

The EAC-2000 looks for the boosted mobile signal level to fall below a settable Multi-Donor activation threshold. If this happens, the booster encodes and transmits the channel relationships to any Multi-Donor Units that may be listening. However, this does not mean the mobile will necessarily be handed off. Transmission of this information merely allows the Multi-Donor Unit to know (if it is able to see the mobile signal at sufficient level) to which channel it should "untranslate" the mobile.

2.6 Multi-Hop Operation

Multi-hop operation (illustrated below) involves setting up two or more EAC-2000 units (or EAC-2000 units and EAC-IV units) to operate together in a line—for example, along a major corridor leading into a metropolitan area.

Donor Cell	⇔	Booster #1	⇔	Booster #2	⇔	Booster #3

The boosters are set up so that there is a two-way RF path between the donor and booster #1 and between each pair of adjacent boosters. This arrangement can be used to handle situations in which a mobile—

- Places or answers a call while in the coverage area of any of the boosters.

- Drives across the coverage boundary:
  - Donor-to-booster
  - Booster-to-booster (away from donor)
  - Booster-to-booster (toward donor)
  - Booster-to-donor

2.6.1 Control Channel Response or Access

When a mobile places or answers a call, the first exchange of information occurs on the reverse control channel (from mobile to donor). If the call is a mobile-answered call, the exchange is a page response. If it is a mobile-originated call, the mobile does an access. There is little difference in the way EAC-2000 boosters handle these two. Since the mobiles self-locate, the control channel chosen for the access determines in which booster's coverage area (if any) the mobile is located.

2.6.2 Repeating the Response or Access

All boosters between the terminating booster and the donor cell repeat the access or page response and decode it. From the decoding they extract the mobile identification number (MIN). Next, the cellular system assigns a voice channel to that particular mobile by sending, over the forward control channel, an initial voice channel designation (IVCD) message consisting of the mobile's MIN and a voice channel that will be used by the donor for the call.

The multi-hop boosters are all monitoring the forward control channel data stream. The boosters that decoded the access or page response on the reverse control channel also decode the corresponding IVCD message on the forward channel.

Booster #1 substitutes its chosen boosted channel for the donor voice channel in the IVCD message and sets up a boost path between the donor-assigned voice channel and the boosted voice channel of booster #1. Likewise, booster #2 changes the channel number in the IVCD message and sets up a boost path between the boosted voice channels of boosters #1 and #2.

All of the boosters between the terminating EAC-2000, where the call is placed, and the donor cell will in this fashion identify that particular mobile as a candidate for repeating and will have decoded the donor channel assigned.

The mobile will decode the IVCD message from the terminating EAC-2000 and go to the boosted voice channel assigned by it. All EAC-2000s between the donor and the terminating one will simultaneously set up boost paths between the previous EAC-2000 (or donor) and the next EAC-2000. Thus the path from mobile to donor is complete.

2.7 Local/Remote Link

The operating parameters of the EAC-2000 can be programmed and monitored locally, through a serial link attached to a standard RS-232, ASCII terminal. The same control can be exercised remotely via a telephone line, modem, and the same kind of terminal.

2.7.1 Local Link

The local link is established by connecting a conventional ASCII, RS-232 terminal to the 25-way D-sub connector on the EAC-2000 controller board. The terminal should be set for 9600 baud, even parity, 7 data bits, 1 stop bit, full duplex (no local echo), all capitals, disable auto XON/XOFF and soft scroll, and "carriage return only."

2.7.2 Remote Link

The EAC-2000 comes equipped with an integral modem attached to an installed cellular mobile radio.

This equipment makes it possible to dial up and communicate with the EAC-2000 using a remote terminal and compatible modem. The EAC-2000 can also be set up to automatically dial a predetermined telephone number if a major fault occurs.

Once the remote link is established, the interface with the system is exactly like that on the local link, but at a different baud rate. If both links are up, characters typed on either terminal are echoed to both, along with the resulting EAC-2000 output. This makes it possible for an experienced operator to exercise the system remotely while someone watches locally, or for the two to exercise the system together.

2.8 Programmable Parameters

Virtually all of the operating parameters of the EAC-2000 are under software control. For descriptions of the programmable parameters and the available options for each, refer to Volume 2, Section 2.

2.9 Alarms

The EAC-2000 constantly monitors and logs a variety of alarm conditions. For descriptions of these alarm conditions, see Volume 2, Section 3.8.

Section 3. Specifications and Drawings

3.1 Specifications

Specifications for power, environment, mechanical, RF, interface, and general purpose alarm/control connections are given in Figure 3-1.

Figure 3-1. Specifications

Power	
Recommended ac service:	200–240 Vac, single-phase 50/60 Hz 20 amp min.
AC power requirements (for 10 channel operation):	
28 Vdc power supply without battery plant	2900 watts max.
28 Vdc power supply with battery plant	4000 watts max.
System dc power requirements (supplied by 28 V power supply):	19–30 Vdc 100 amps max.
Environment	
Operating temperature:	-30° to +60°C
Relative humidity:	95% max @ +50°C
Storage temperature:	-40° to +75°C
Mechanical	
Outdoor cabinet dimensions (HxWxD):	68 x 24 x 40 in *(169.7 x 62.2 x 101.6 cm)*
Weight:	Approximately 690 lbs *(363 kg)*

Figure 3-1. Specifications (Continued)

RF			
Gain:	> 120 dB		
Overall reverse path noise figure:	< 12 dB		
Channel filter bandwidth	> 26 kHz @ -6 dB > 75 kHz @ -60 dB		
Maximum input signal level:	-40 dBm		
Frequency tracking accuracy (for channel boost mode):	±1.5 Hz max per MHz of translation		
RSSI range:			
Reverse:	-120 to -20 dBm		
Forward:	-100 to -20 dBm		
RF power amplifiers:			
PAs 1–10 (forward direction):	45-watt		
PA 6 (hand-off transmitter):	45-watt		
Reverse direction:	10 x 2-watt (combined linearly)		
Programmable frequency control:			
Spacing:	30 kHz		
Range:	824–849 MHz 869–894 MHz		
Channels:	1–799, 991–1023		
Output frequency accuracy (for data transmission mode):	±1.5 ppm max.	±0.25 ppm max.	±0.25 ppm max.
Maximum usable power output: (Measured at antenna connector, after internal combiner and duplexer losses)			
	5-Channel	10-Channel	
M1 antenna port (forward direction):	20 watts/channel 100 watts total	15 watts/channel 150 watts total	
M2 antenna port (hand-off):	20 watts max.		
D1 antenna port (reverse direction):	100 milliwatts per channel 1.0 watt total		

Figure 3-1. Specifications (Continued)

Interface	
Antenna connectors:	Type N
Local diagnostic interface:	RS232, ASCII 9600 baud, even parity, 7 data bits, 1 stop bit, full duplex
Remote diagnostic interface:	Microcomm TravelPorte™ (high-speed, error correcting, data compression modem)
General Purpose Alarm/Control Connections	
Digital Inputs (pins 6, 7, 8, 9):	
Load:	> 100 kΩ
Low:	< 2 Vdc
High:	> 4 Vdc max. +28 Vdc
Open Collector Outputs (pins 2, 3, 4, 5):	Max. +15 Vdc, 20 mA Impedance 733 Ω
Analog inputs (pins 10, 11, 12, 13):	
Load:	1 MΩ
Range:	0–5 Vdc, 20 mV resolution
+5 Vdc source (pin 1):	+5 Vdc ±5%, 100 mA max.

3.2 Equipment Characteristics

EAC-2000 accessories, module interchangeability, compliance, and reliability are described in this section, along with skills required for servicing the equipment.

3.2.1 Accessories

The following items are supplied with the EAC-2000:

- EAC-2000 Technical Manual (Volumes 1, 2, and 3), power supply manual, mobile manual, modem manual

3.2.2 Interchangeability

Inside the EAC-2000, the following modules are interchangeable:

- RF boards (positions 1–11)
- 45-watt PAs

3.2.3 Compliance with Standards

The EAC-2000 complies with the applicable agency rules regarding cellular base stations for AMPS systems.

- **AMPS Cellular Systems:** The unit is designed to work in systems that comply with—
  - EIA/TIA 553A Cellular System Mobile Station–Land Station Compatibility Specification
  - EIA/TIA IS-20A, Recommended Minimum Standards for 800 MHz Cellular Land Stations
  - EIA/TIA IS-19B, Recommended Minimum Standards for 800 MHz Cellular Subscriber Units
  - RSS-118, Radio Standards Specification, Canada

- **TDMA Cellular Systems:** The EIA/TIA IS54A and IS54B Cellular system Dual-Mode Mobile Station - Base Station Compatibility Standard specifies both analog and digital modes of operation. The EAC-2000 is not capable of boosting digital calls. However, the EAC-2000 can operate with dual mode systems and dual mode mobiles. The EAC-2000 control channel always transmits with the "PCI" bit clear. Dual mode radios operating on the boosted control channel therefore access using the EIA 553 (i.e., analog) protocol. The donor cell, whether dual mode or not, will assign an analog channel, and the EAC-2000 will boost the call.

3.2.3 Compliance with Standards (Continued)

- **NAMPS Cellular Systems:** The Motorola NAMPS Air Interface Specification specifies both a 30 kHz wide channel operation and a 10 kHz wide channel operation. The EAC-2000 is not capable of boosting calls assigned to narrow channels. However, the EAC-2000 can operate with both NAMPS radios and NAMPS systems. The EAC-2000 control channel always transmits with the "EP" bit clear. NAMPS radios operating on the boosted control channel therefore access using the EIA 553 protocol. The donor cell, whether NAMPS capable or not, will assign a wide channel, and the EAC-2000 will boost the call.

- **Microcomm Modem:** This modem is compatible with the following modem standards:

Bell 103	CCITT V.32
Bell 212A	CCITT V.42
CCITT V.21	CCITT V.42 BIS
CCITT V.22	MNP Class 5
CCITT V.22 BIS	MNP Class 10

- **Cellular Radio:** The cellular radio used for remote mode operation is a standard unit and complies with applicable standards.

3.2.4 Reliability

Careful consideration has been given to the reliability of the unit during design.

- In most cases, **circuit design** is based on derating component specifications to 50% or less of guaranteed limits.

- The **power supply** has transient protection to guard against lightning and power line surges.

- The **microprocessor** circuitry has a low voltage reset and watchdog timer to provide firmware program reliability.

3.2.5 Service Skills Required for the EAC-2000

The microprocessor components and circuitry require service by personnel skilled in repairing firmware-driven logic assemblies. The RF circuitry contains surface-mounted components that require special care when being repaired.

3.3 EAC-2000 Illustrations

Figures 3-2 and 3-3 illustrate front and back views of the AMPS EAC-2000 with the doors removed.

3.4 EAC-2000 Diagrams

Figure 3-4 shows the regulator module wiring diagram, and Figure 3-5 shows the power supply shelf wiring diagram. In addition, the following foldout diagrams are included in this section:

- Block Diagram
- Main Harness Wiring Diagrams
- Card Cage Wiring Diagram
- Backplane Wiring Diagram
- PA Cage Wiring Diagram
- Mobile Shelf Wiring Diagram

Figure 3-2. AMPS EAC-2000, Front View (Door Removed)

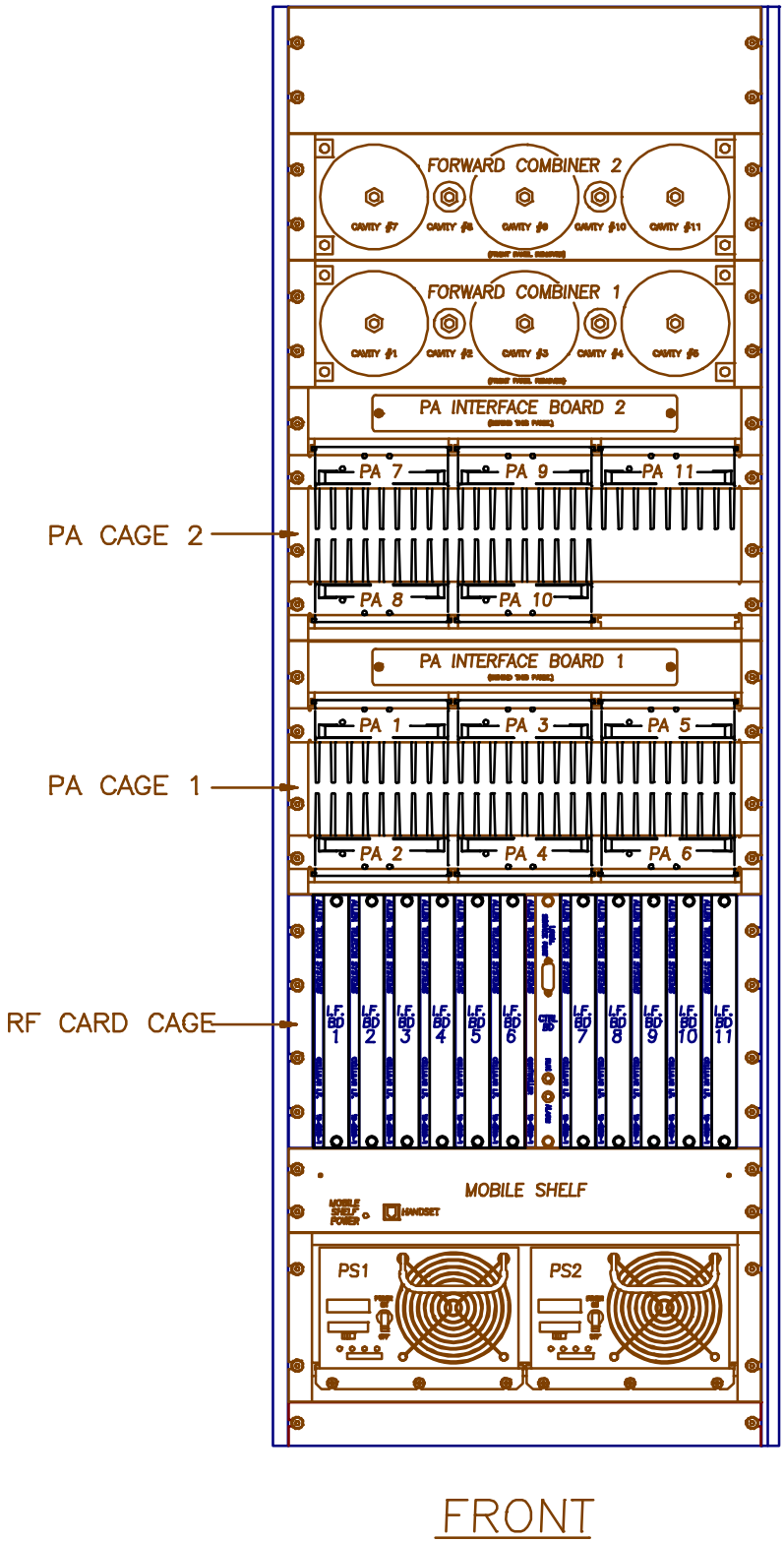

Figure 3-3. AMPS EAC-2000, Back View (Door Removed)

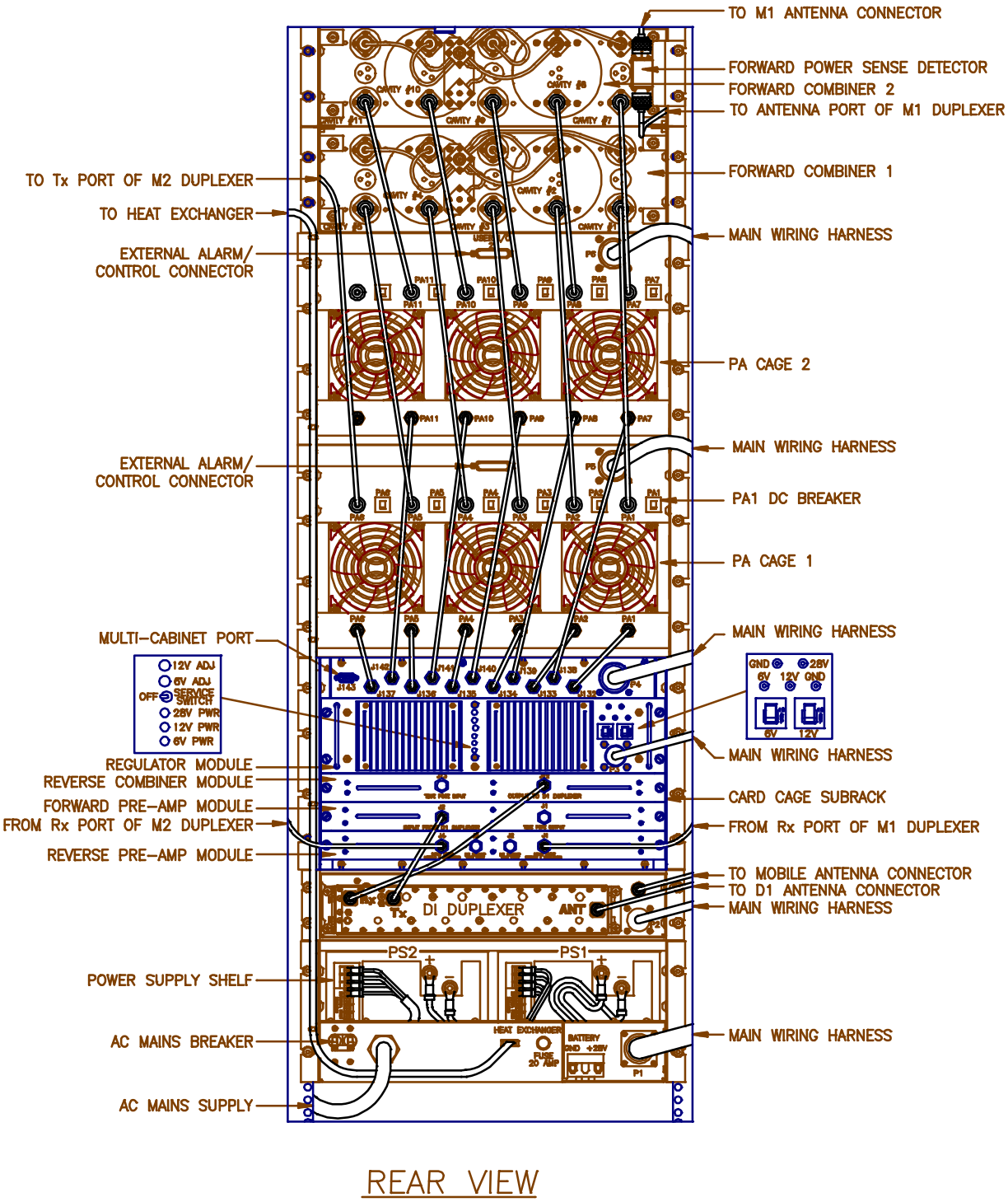

Figure 3-4. Regulator Module Wiring Diagram

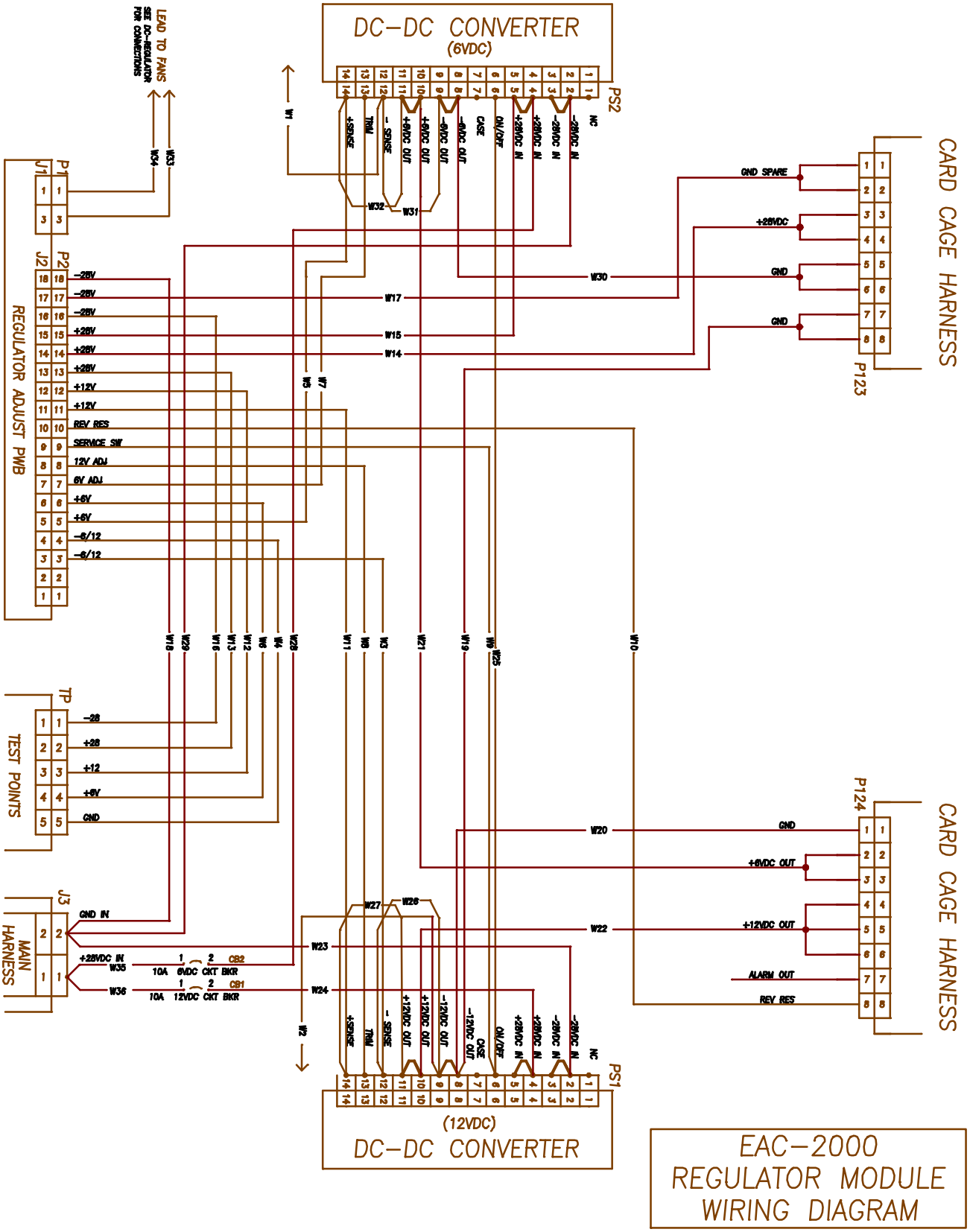

Figure 3-5. Power Supply Shelf Wiring Diagram

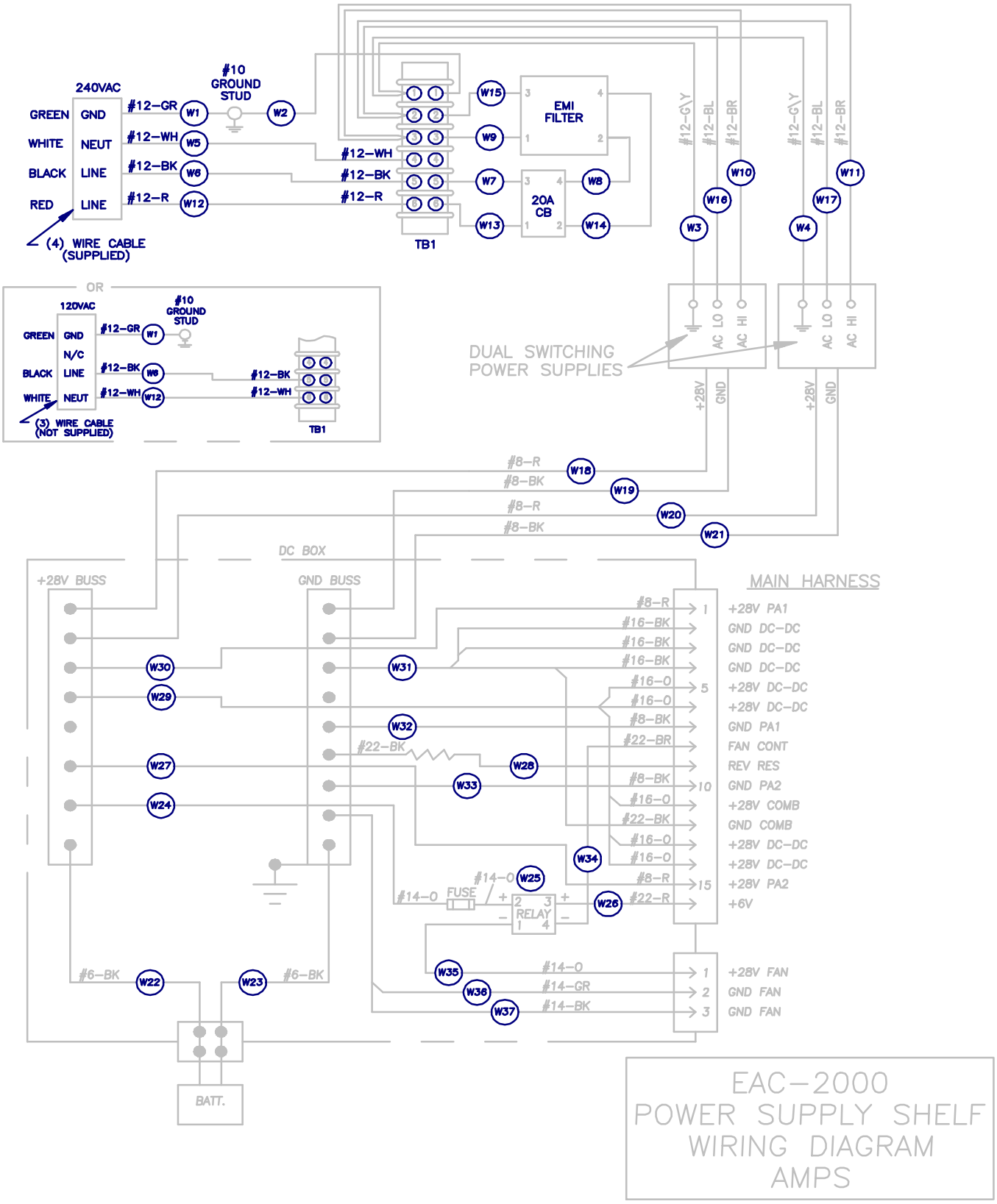

AMPS
EAC-2000™ Manual

Appendices

27-7658-3

Issue 12/95

© Copyright 1995 Allen Telecom Systems
All Rights Reserved

ALLEN TELECOM GROUP
SYSTEMS
DIVISION ™

Field Support

If you need technical assistance with the EAC-2000™, contact Allen Telecom Systems at one of the following telephone numbers:

Extend-A-Cell HOTLINE:		(800) 800-EAC4 (3224)
	or	(216) 349-8413
Systems Engineering Department:		(216) 349-8413

Appendix A
Troubleshooting Guide

Contents

Page

A.1 Getting Help A-3

A.2 Basic Troubleshooting Tips A-3
- A.2.1 Illegible Display A-3
- A.2.2 No Display A-3
- A.2.3 No Power on Channel A-4

A.3 Donor-Dropped Calls A-6
- A.3.1 Weak Signals from Donor A-6
- A.3.2 Cellular System Hand-offs A-7
- A.3.3 Donor RSSI < Threshold Counts (Nominal Number) A-8
- A.3.4 Donor RSSI < Threshold Counts (Large Number) A-9

A.4 Calls Not Processed A-10

A.5 Poor Talk-Back Range (Mobile-to-Booster) A-11

A.6 Dropped Calls Near Edge of Booster Coverage Area A-13

A.7 Excessive Hand-backs/Hand-ins on Voice Channel A-15

A.8 No Hand-in A-16

A.9 No Hand-back A-16

A.10 Dropped Calls Along Multi-Hop Path A-17

A.11 Unsuccessful Setups A-18

A.12 Dropped Calls Due to SAT Fades A-19

A.13 Cross-Talk A-20

A.14 Erratic Operation of Remote Modem A-22

Contents (Continued)

Page

A.15 Alarms A-23
A.15.1 SYN LOC Alarms A-23
A.15.2 I2C and EEPROM Alarms A-23
A.15.3 RF COM Alarms A-23
A.15.4 Personality Alarms A-23

A.16 Noise A-26
A.16.1 Burst Noise at the Mobile A-26
A.16.2 Transmitter Output Noise, Forward Direction A-28

A.17 Trouble Locking Onto Control Channel A-29

A.1 Getting Help

The procedures in this appendix may be used in case of trouble. For help with these or any other problems, feel free to contact Allen Telecom Systems', Extend-A-Cell Technical Hotline:

HOTLINE

1-800-800-EAC4 (1-800-800-3224)

International: 1-216-349-8413

Office hours are 8:00 a.m. to 5:30 p.m. EST, Monday–Friday. Twenty-four hour emergency paging is available by following the directions on the Hotline voicemail message. Routine assistance at other times can be arranged in advance.

A.2 Basic Troubleshooting Tips

A.2.1 Illegible Display

Symptom: Illegible display when terminal is turned on.

Solution: Check terminal setup.

A.2.2 No Display

Symptom: No display when terminal is turned on.

Solution: Power down. Recheck power hookup, terminal hookup, and terminal setup.

A.2.3 No Power on Channel

Symptom: No power on one or more channels.

Check the ALA screen:

- Is there an RF board Out-of-Service alarm? If yes—
  - Is it due to a Personality Mismatch?

    Solution: Check to make sure that the right IF board has been installed and that it is seated correctly on the back plane connector.
  - Is it due to Serial Data Link alarms?

    Solution: Swap the board with another position in the card cage. If the Serial Data Link alarm stays with the slot position, replace the back plane board. If the Serial Data Link alarm goes with the suspect RF board, replace that RF board.
  - Is it due to Synthesizer Unlock alarms?

    Solution: Replace the defective RF board.
  - Are there PA Low Power alarms and a PA Out-of-Service alarm?

    Solution: Continue with the following check items. If no other cause is found, PAs may need to be exchanged or replaced.

A.2.3 No Power on Channel (Continued)

- Are any connections loose? Check, especially, the "Phoenix" connectors that seat in the PA 'D' connectors (accessible through the back of the unit).

  Solution: Tighten loose connections.

- Where is power being lost? (Use normal RF troubleshooting procedures to determine this.)

  - When keyed, the IF board output should be above -8 dBm, measured at the TNC connector input to the PA shelf.

  - The 45W PA output can be checked at the N connector on the panel below the TNC connectors.

- Does the power supply current rise by about 5–7A when the PA is keyed?

  If so, the PA is receiving drive and putting out power. This indicates a problem somewhere between the output connector and the combiner.

A.3 Donor-Dropped Calls

Customers complain that calls are being dropped. SCS and DCS show that an excessive number of calls are being terminated due to "DONOR RSSI < THRESHOLD."

(If customer complaints are few, but call statistics indicate a high percentage of DONOR < RSSI THRESHOLD counts, refer to sections A.3.3 and A.3.4 below.)

A.3.1 Weak Signals from Donor

Signals from the donor cell site may be below the default donor disconnect threshold (-80 dBm). The EAC-2000 equipment will disconnect the call and record it as a DONOR RSSI < THRESHOLD if the received donor signal is below this level.

The minimum recommended donor signal level is -75 dBm (-70 dBm for Multi-Hop), although operation to -85 dBm can be expected with some degradation. If this is acceptable, the donor minimum disconnect threshold should be changed to -90 dBm. Under no circumstance should reliable operation be expected below -85 dBm.

Weak signals from the donor may be a result of—

- ☑ Improperly engineered donor-repeater RF path.
- ☑ Improperly oriented donor antenna.
- ☑ Insufficient gain in the donor antenna.
- ☑ Excessive loss in the RF cable between the donor antenna and the EAC-2000.
- ☑ Nearby obstructions affecting or blocking the donor antenna.
- ☑ Lossy or bad RF antenna connectors.
- ☑ Defective duplexer within the EAC-2000.
- ☑ Defective forward preamp module.
- ☑ Defective internal RF cabling within the EAC-2000.

A.3.2 Cellular System Hand-offs

The cellular system hands the EAC-2000-processed mobile to another cell site.

This will occur if there is another nearby cell site where the signal from the EAC-2000 is stronger than at the selected donor cell site, and if the signal from the EAC-2000 to the donor cell site is below the donor's hand-off candidate threshold (typically -85 dBm). This will result in a dropped call if the mobile is out of range of the other cell site. If this is happens, any one of the following steps can be used to solve the problem:

- Increase the signal level from the EAC-2000 to above the desired cell site's hand-off candidate threshold.
- Reduce the hand-off candidate threshold at the desired donor cell site to below the signal being received from the EAC-2000.
- Reorient and/or replace the donor antenna at the EAC-2000 with a more directional antenna to reduce the signal level at the nearby cell site to less than that at the desired donor cell site.
- Select the stronger nearby cell site as the donor.

Note that the signal level received at the donor cell site from the EAC-2000 will nominally be 20 to 25 dB below that received at the EAC-2000 from the donor cell. That is, a signal of -60 dBm from the donor cell site at the EAC-2000 generally correspond to a -80 to -85 dBm signal at the donor cell site from the EAC-2000. This difference in power levels is necessary to prevent the EAC-2000 from interfering with the channel reuse pattern of the other cell sites within the cellular system. Thus, in most cases the signal level from the EAC-2000 at the cell site will be below that cell site's hand-off candidate threshold.

A.3.3 DONOR RSSI < THRESHOLD Counts (Nominal Number)

Calls are processed normally, but DCS statistics indicate that a small percentage (up to 20%) are recorded as being terminated at the EAC-2000 due to DONOR RSSI < THRESHOLD.

This is considered to be a normal condition. The majority of calls should end due to MOBILE RELEASE DETECTED. However, there will always be mobiles that drive out of range of the EAC-2000, away from the cellular system while trying to maintain the call. These calls will drop due to SAT FADES either at the EAC-2000 or at the donor cell site. Usually, the SAT fade timer at the EAC-2000 is synchronized with the timer at the donor cell site. Thus, if the donor cell site drops the call due to a SAT fade before the EAC-2000's SAT timer has expired, the EAC-2000 will record the call as a DONOR < THRESHOLD reason for termination (as explained below).

This number can be reduced if the EAC-2000 SAT fade timer is set to a shorter interval than the cell site's SAT fade timer. This is not recommended, however, since it may result in some marginal calls being dropped that otherwise could continue.

The recommended setting for the SAT fade timer at the EAC-2000 is the same setting that is used at the cell site (usually 3 to 5 seconds). This setting allows the majority of call terminations under these weak-signal conditions to be recorded as SAT FADES, with some nominal number being recorded as DONOR < THRESHOLD.

A.3.4 DONOR RSSI < THRESHOLD Counts (Large Number)

Calls are processed normally, but a large DONOR < THRESHOLD count, along with a low number of SAT FADE counts, shows up in DCS statistics as the reason for calls being terminated.

This situation happens when the SAT fade timer in the EAC-2000 is set to a period longer than the SAT fade timer at the donor cell site. That is, weak mobiles that are dropped by the donor cell site due to SAT fade will show up as a donor-dropped call at the EAC-2000 because the EAC-2000 is still looking for the mobile to reappear.

Setting the SAT fade timer at the EAC-2000 to a period longer than the donor cell site fade timer is not necessary (nor is it recommended), but it does not cause any harm to system operation. The SAT fade timer may be set longer than the cell site if the operator wishes, as long as it is understood that this will result in an unusually high number of DONOR RSSI < THRESHOLD counts.

A.4 Calls Not Processed

Mobile-originated calls through the EAC-2000 result in an immediate "fast busy" in the earpiece. Also, calls placed to mobiles in the EAC-2000 service area receive an OUT-OF-SERVICE message from the cellular system. Mobiles otherwise lock onto the EAC-2000 control channel.

This condition may occur for one of two reasons:

- **Too Weak a Signal from the Mobile at the EAC-2000.** This can occur if the mobile is at the edge of the booster coverage area. The signal from the EAC-2000 must be above -110 to -105 dBm for consistently reliable reverse-path control channel operation. Also, note that many manufacturers' mobiles are capable of locking onto a weak control channel at signal levels far below that usable for voice communication.

- **Defective Reverse Path Through the EAC-2000.** Check the following hardware to confirm that a reverse RF path exists for the mobile to obtain service with the donor cell:

  - ☑ RF board in slot 1 (switch with another board)
  - ☑ Presence of power to the Reverse Combiner module
  - ☑ Reverse RF preamp module
  - ☑ *Defective duplexers
  - ☑ *Defective mobile M1 or M2 antenna system/cabling
  - ☑ *RF cables for open, short, or intermittent connections

☞ NOTE: The mobiles may operate satisfactorily for the last three conditions (marked *) when near the EAC-2000, but will exhibit these symptoms when operated at any distance from the EAC-2000.

A.5 Poor Talk-back Range (Mobile-to-Booster)

Talk-out range seems to be significantly better than the talk-back range. This problem exhibits itself as particularly noisy signals from the mobile while the mobile is receiving relatively noise-free signals from the EAC-2000.

This condition may occur for several reasons:

- Donor Cell Is Powering Down the Mobile. If the signal from the EAC-2000 back to the donor cell site exceeds the power reduction threshold at the cell site, then the cell site will attempt to reduce the "mobile signal" from the EAC-2000.

  Since the output from the EAC-2000 is limited at +20 dBm, the cell site may reduce the mobile to its minimum power step. One way to resolve this problem is to work through the SET functions to reduce the reverse PA power, which is adjustable from +5 to +20 dBm.

  In addition, the power cutback threshold at the donor cell may be increased, if necessary, to maintain the signal from the EAC-2000 below the cutback threshold. At least a 6 dB margin below the cutback threshold is recommended to prevent the mobiles from erroneously being powered down.

- Antennas Are Not Broadband. If base station antennas that are optimized for the cellular transmit band are used, then the mobile receive signals in the cellular receive band (mobile transmit band) at the EAC-2000 will suffer. Antennas that offer gain over the entire transmit-receive band should be used. This applies to both the mobile M1/M2 antennas and the donor D1 antenna.

A.5 Poor Talk-back Range (Mobile-to-Booster) (Continued)

- **Poor Isolation Between Donor and Mobile Antennas at the EAC-IV.** Poor isolation between the donor (D1) and mobile service (M1/M2) antennas at the EAC-2000 result in an increased noise floor (and possibly cross-talk) at the EAC-2000's reverse preamp input. This will also reduce the effective mobile EAC-2000 range since this noise floor will mask weak signals.

  Note that the antenna connected to the modem mobile within the EAC-2000 must also have sufficient isolation from the D1 and M1/M2 antennas. Otherwise, the local mobile may cause preamp overload within the EAC-2000, and hence noisy operation for other mobiles that are being repeated.

  Normally, vertical separation of 40 feet or more between the D1, the M1/M2, and the modem mobile antennas will provide adequate isolation. Appendix D describes how much isolation is needed, how to achieve it, and how to measure it.

- **Defective Reverse Preamp.** A defective reverse preamp will also cause poor talk-back range. First, check to see if the gain through the preamp is within specification (better than 9 dB for each path, exclusive of duplexer losses). If gain is less than this value on either path, then the preamp should be replaced. Ordinarily, diversity will select the better path if one side of the preamp is bad, but it is possible that for both paths to be bad, particularly if lightning damage is involved.

- **Defective Duplexers or Cables.** Defective duplexers and/or cables with excessive insertion loss (> 2 dB) will also affect talk-back range.

- **Some Imbalance Is Normal.** Since the EAC-2000 (and cell sites) transmit at higher ERPs than the mobiles, some imbalance between talk-out and talk-back will exist. Diversity and low-noise preamps are typically used to minimize this imbalance, but some imbalance usually remains even with these measures.

A.6 Dropped Calls Near Edge of Booster Coverage Area

Calls are set up either to or from mobiles when they are relatively close to the EAC-2000 but are dropped abruptly when they are near the edge of the EAC-2000 coverage area away from the donor cell.

This situation may occur if the power output from PA 6 (the hand-in PA) is low. Normal operation is for the forward voice channel (PAs 2–5 and 7-11) to hand the mobile back to its originally assigned channel when that mobile drops below the hand-back threshold at the EAC-2000. The hand-in transmitter (PA 6) is used to hand the mobile back to the boosted channel, assuming that PA 6 again captures the mobile after it has been sent to its original channel. Thus, low PA 6 power will not hand a mobile back to the booster, thereby causing that mobile to be abruptly dropped if it is not within range of the donor cell.

Low power from PA 6 may be caused by one of the following:

- PA 6 power output adjusted too low. The PA 6 power level should be set to at least as high as the voice channel power output setting.
- Defective PA 6, providing low power output.
- Low RF board 6 output (should be at least -8 dBm).
- Defective M2 antenna, including improper vertical alignment.
- Defective duplexer associated with PA 6.
- Defective RF cabling associated with PA 6.

A.6 Dropped Calls Near Edge of Booster Coverage Area (Continued)

In addition to the causes just described, calls may be dropped unnecessarily by the EAC-2000 if the system parameters are improperly set. The following two conditions should be checked if an abnormal number of dropped calls are being reported.

- Hand-back Threshold Set Too Low. This will place the mobile in a noisy path situation before attempting the hand-back/grab-back sequence. A mobile in a noisy path situation will have a higher probability of missing the subsequent grab-back message after it is handed back to its original donor channel. If the mobile does not correctly decode the grab-back message, and if it is out of range of the donor cell, the call will then be dropped.

- Excessive Number of Hand-back/Grab-back Message Attempts Programmed into the EAC-2000, with Short Delay Between Attempts. This would increase the probability of a grab-back transmission being missed by the mobile, particularly if a low hand-back threshold is programmed, as in the previous paragraph. The number of attempts should be reduced to minimize the probability of a missed hand-in transmission under these circumstances.

A.7 Excessive Hand-backs/Hand-ins on Voice Channel

The mobile user notices an excessive number of hand-offs when in the EAC-2000 area.

A certain number of hand-back/hand-in operations are to be expected in normal system operation. These hand-offs will occur when the mobile is near the fringe of the EAC-2000 area and away from the donor coverage area. Excessive hand-offs may occur due to improper selection of hand-back and hand-in thresholds, as follows:

- **Hand-in and Hand-back Thresholds Too Close Together.** A minimum of 6 dB between these two thresholds is required, and 10 dB is recommended to keep the hand-back attempts to a minimum.

- **Reversed Hand-in and Hand-back Thresholds.** The hand-in threshold should always be higher than the hand-back threshold (for example, -75 dBm for hand-in and -85 dBm for hand-back).

- **Hand-back Threshold Set Too High.** This situation will occur if there is a minimum of overlap between the donor and the EAC-2000. The EAC-2000 attempts to hand back to the donor, but it is always stronger than the donor because it attempts the hand-back when the mobile is still relatively close (and therefore strong) to the EAC-2000.

- **Improperly Set Timing and Number of Hand-back Attempts.** After determining that the thresholds are properly set, the time between the hand-back attempts may be adjusted along with the maximum number of attempts to minimize the effect of excessive hand-offs to the user.

- **Improper Signal Balancing in Multi-Donor Installation.** If a multiple-donor installation is involved, improper signal balancing from the EAC-2000 back to the donor cell sites can also cause excessive hand-offs. Refer to the Multi-Donor application note and troubleshooting guide if this type of installation is involved.

Reverse RF boards with improperly calibrated or defective reverse RSSI circuitry can also cause excessive hand-backs and hand-ins on the voice channel. However, this will usually be noticed with a particular channel rather than with all channels in the EAC-2000.

A.8 No Hand-in

Mobiles drive into the area of the EAC-2000 from the donor area but are not handed-in until they drive close to the EAC-2000. Calls are otherwise processed normally to and from the mobiles within the EAC-2000 coverage area.

This situation will occur if there is significant overlap of coverage between the donor and the EAC-2000. The signal from the EAC-2000 must be a few dB stronger than the donor at the mobile before hand-in will occur. If desired, the hand-in threshold can be raised to minimize the number of unnecessary hand-in transmissions.

A.9 No Hand-back

Mobiles do not hand-back to the donor when driving from the EAC-2000 coverage area to the donor coverage area.

This condition may occur in the following situations:

- Minimum Overlap of Coverage Between the Donor and the EAC-2000. If the hand-back threshold is set too high, the EAC-2000 will exceed the maximum number of hand-back attempts allowed before the mobile is close enough to the donor to keep the EAC-2000 from capturing it with its subsequent hand-in attempt. The hand-back threshold should be decreased while the number of hand-back attempts is increased.

- Defective Hand-off Data Transmission from the Associated Forward Voice IF Board. This condition would be associated with one channel only, rather than all channels. This can be checked by keying the suspect forward channel via the SET mode, and then monitoring the transmitted signal for power output, proper deviation, and the data waveform for excessive distortion.

A.10 Dropped Calls Along Multi-Hop Path

Mobiles are abruptly dropped or are handed back to the donor channel while driving along a multi-hop corridor.

This situation will occur if the hand-in and hand-back thresholds are improperly set at each EAC-2000 along the corridor. Also, minimum or nonexistent overlapping coverage between the EAC-2000s cause calls to be dropped.

- Improperly Set Hand-back Thresholds. In a multi-hop system, the hand-back thresholds at each EAC-2000 must be set so that they are at least 10 to 15 dB below the received level from the next EAC-2000 down the corridor. This level is determined when the EAC-2000 down the corridor is transmitting back to the current EAC-2000 at its maximum limited output (normally +20 dBm).

  The 10 to 15 dB margin is necessary to allow the mobile to operate down to nominally -110 dBm at any EAC-2000. Otherwise, any EAC between the donor and the EAC-2000 serving the mobile could erroneously hand-back a mobile to the wrong channel and cause a dropped call if the 10 to 15 dB margin is not provided. (For example, if the maximum received level from the next EAC-2000 down the corridor is at -90 dBm, then the hand-back threshold should be set at -105 dBm.)

- Minimum Overlap Coverage and Hand-in Threshold Too High. Calls could also be dropped if there is minimum overlap coverage between the EAC-2000s, and if the hand-in threshold is set too high. That is, the mobile could drive down the corridor to an area that is below the hand-back threshold of its current EAC-2000 and still not be above the hand-in threshold of the next EAC-2000. The hand-in threshold of the next EAC-2000 down the corridor should be set such that it will attempt hand-ins to the mobile before that mobile drops below the hand-back threshold of its current EAC-2000. Note that this is the case only for those mobiles that are driving down the corridor away from the donor.

A.10 Dropped Calls Along Multi-Hop Path (Continued)

- Hand-back Threshold Too High. For mobiles that are traveling toward the donor up a corridor, a too-high hand-back threshold at its current EAC-2000 could also cause a call to be dropped. That is, the current EAC-2000 may have depleted its hand-back attempts to the mobile if that mobile has not progressed to the point where the signal from the next EAC-2000 up the corridor is stronger than the current EAC-2000. This is not likely to occur because the hand-back thresholds must be set to a reasonably low level, as described earlier.

- Gap in Coverage Area. It also is possible to have a multi-hop system with adequate signal levels for the interconnecting path (due to antenna heights at the EAC-2000s), but to have a gap between the mobile coverage areas of the EAC-2000s. If this is the case, then mobiles traveling either down or up the corridor will likely have their calls dropped when they reach this area. To prevent this from occurring, the mobile coverage areas should be designed such that overlapping coverage is provided, preferably with received signal levels from the mobiles at or above -95 dBm in the overlap area.

A.11 Unsuccessful Setups

Mobile is identified as "RSSI > Threshold," and call setup is attempted, but the mobile does not go to the boosted voice channel. These calls are labeled as "unsuccessful setup" by SCS at the EAC-2000.

In this situation, mobiles are not being handed-in from their original voice channel by the EAC-2000. This can occur in areas where signals are approximately the same at the mobile from the donor and from the EAC-2000. The EAC-2000 must be at least a few dB stronger than the donor at the mobile before the EAC-2000 will capture that mobile. This is a desirable condition in that it keeps the mobile on the donor when signals from the donor are adequate.

A.12 Dropped Calls Due to SAT Fades

An excessive number of SAT fades are noted in the call statistics, or customers are complaining that calls are being dropped.

- If excessive SAT fades are noted with one RF board, then a problem may exist with the reverse receiver portion (450 kHz limiter-amplifier, discriminator, audio filter, audio switch) of that board. In this case, the RF board must be replaced.

- If excessive SAT fades are noted with half or all RF boards, then check for SAT detector operation as follows:

  ☑ Enter the SAT=<CR> command. Check to see if the SAT free run frequency reads *6100 ± 50 Hz*. Press <ESC> to exit.

Note that SAT fades will be recorded if the mobile subscriber hangs up within 10 seconds after the call is placed. This will result in a nominal number of SAT fades in the call statistics, which is considered normal.

A defective reverse preamplifier could also cause an excessive number of SAT fades. Check the reverse preamplifier for proper gain (9 dB minimum) and monitor its output with a spectrum analyzer to make sure that it is not generating noise or other spurious signals.

A.13 Cross-Talk

Cross-talk is heard through the booster on some channels, particularly if two or more mobiles are close to the EAC-2000.

Cross-talk can be a result of insufficient isolation between the M1/M2 and donor antennas, and/or too-close spacing between the donor and boosted channel assignments.

- **Insufficient Isolation, Channels Too Close.** A minimum of 75 dB antenna isolation is recommended.

  Operation with antenna isolations of less than 80 dB is feasible if signal levels from the donor cell are stronger than -65 dBm. Refer to the appendix on isolation for suggestions on achieving and measuring antenna isolation.

  ☞ NOTE: For multi-hop installations, adjacent EAC-2000s along the corridor should not use channels from the same 21-channel spacing set. If the same channel set is used, the intermodulation products from the transmitter outputs in both directions will fall directly on the receiver inputs. In many cases, the randomness of the channel assignment by the donor site will minimize this problem, but there will be channel assignment combinations that could result in significant cross-talk due to intermod. It is best to avoid this possibility by offsetting the channel sets between adjacent EAC-2000s.

- **Mobiles Very Close to the EAC-2000.** Two or more mobiles that are very close to the EAC-2000 (within a quarter of a mile or so) could cause cross-talk to a weak signal at the EAC-2000 from a distant mobile. The EAC-2000 automatically powers down the two strong mobiles to minimize this condition, but there could be a few seconds of cross-talk to the weak mobile until the EAC-2000 has had time to power down the strong mobiles.

A.13 Cross-Talk (Continued)

- **Nearby Noncellular Transmitters.** Other noncellular transmitters that may be operating near the EAC-2000 may also cause cross-talk. Standard procedures for solving this type of problem should be used. The presence of a foreign signal on one of the boosted reverse path channels can be checked as follows:

  1. Enter SET, disable RF board 1, select the hand-in threshold menu, record the value, and then set it to 0 (disabled).

  2. Exit SET, and monitor SCS for current call activity.

  3. When all current calls are terminated, enter the following sequence:

Entry	Function
RFC <CR>	Invokes RF board communication mode
*b03 <CR>	Enables "receive only" mode.
R <CR>	Either command shows reverse signal levels.

  4. Repeat the R <CR> commands several times and note the RSSI levels on each reverse channel. A channel that has an abnormally high RSSI reading (i.e., -100 dBm or so) compared to the other channels probably has a foreign signal present on one of the boosted reverse channels.

  5. When this test is completed, exit the RFC mode by pressing <ESC>, and then enter SET to restore board 1 back to service and restore the hand-in threshold to its original value.

- **Nonlinear or Oxidized Connections.** Nonlinear or oxidized connections near the EAC-2000 can also cause cross-talk. Again, standard procedures should be used to solve this type of problem.

- **Mobile Close to Booster Is Responding to Hand-off Data Transmissions.** A mobile operating in close proximity to the EAC-2000 may be susceptible to overload by the voice channel or hand-off transmitters. This may result in some mobiles responding to a hand-off data transmission meant for a different mobile, thereby causing it to end up on the wrong channel.

A.14 Erratic Operation of Remote Modem

Remote dial-up of the cellular modem results in either not connecting, or if a connection is made, excessive errors.

This situation may be caused by any of several different factors:

- Insufficient Antenna Isolation. If insufficient isolation exists between the modem mobile antenna and the donor or the M1 and M2 antennas, RF overload of the mobile can cause modem connect problems. Antenna isolation problems also cause some modem calls to be degraded, while others are okay. This is due to the donor cell randomly assigning the mobile to channels that fall on a spurious product that is generated due to mobile overload. The use of an attenuator at the modem mobile's antenna connector can help in may cases. Contact Field Service for assistance.

- Network Limitations. Network limitations in some areas degrade operation. The modems should be set to negotiate an acceptable speed, but it may help to lower the baud rate to 2400 or even 1200, to force the modems to use a lower speed.

- Inadequate or Noisy Donor-to-Mobile Path. The direct path from the donor to the mobile may be inadequate or noisy. The EAC-2000 normally does not boost the modem mobile, so that a voice channel will not be used when remotely monitoring EAC-2000 If this is the case, either a better antenna (gain) should be used with the modem mobile or the EAC-2000 should be allowed to boost the modem mobile.

- Defective Mobile. If poor results persist, then it may be possible that the mobile is defective. Troubleshoot this condition by substitution only after the conditions outlined above have been checked.

A.15 Alarms

A.15.1 SYN LOC Alarms

Occasional Synthesizer Unlocked alarms are being logged, but the boards remain in service.

The unlock may be occurring only when transient conditions (e.g., high temperature or an adjacent board keyed) exist. The board should be replaced. The board should be replaced, but as long as the software does not take the board out of service, it can be left in operation.

A.15.2 RF COM Alarms

RF COM alarms are reported.

A RF COM alarm indicates that a particular RF board failed to respond correctly to a command from the main controller board. An occasional RF COM alarm may be experienced, which should be of no concern because the board will continue to operate normally. If a hardware problem exists, the main controller board will take the affected RF board out of service and generate an alarm for subsequent auto-dialing.

A.15.3 Personality Alarms

An IF board generates a personality alarm and the board is taken out of service.

A personality alarm indicates the wrong board type in the EAC-2000 (i.e., a JTACS board in an AMPS system).

A.15.4 PA Alarms

The system is logging PA alarms.

PA alarms on a single PA are most often caused by PA failure. PA alarms on multiple PAs indicate a problem with the PA cage wiring or PA interface board. The following may also cause PA alarms:

- PA Power Low Alarm Point set too low
- PA power potentiometer set too low
- PA improperly seated in page cage
- Connectors on PA cage or connectors on PA damaged
- Faulty RF board (produces low input power to PA)

A.15.4 PA Alarms (Continued)

- Faulty PA interface board
- Faulty PA cage or system wiring harness
- Installation of PA into unit with power on (causing PA dc breaker to trip)
- Faulty PA dc breaker

The following troubleshooting procedure is recommended.

1. Using the SET command, examine the PA Power Low Point. Use Key Forward PA *(Main Menu → Power Amplifiers Menu → Key Forward PA)* to key the PA and examine the reported power. If the reported power is only slightly low, follow the PA power adjustment procedure (see Volume 1, Section 4.7) or adjust the PA Power Low Alarm Point.

2. If the power reported with Key Forward PA is acceptable, bring the PA back into service. *(See the NOTE following step 10 for instructions on how to do this.)* Place test calls until the call comes up on the board/PA. If an alarm occurs then, the RF board should be replaced. *(Note: Certain failures on the RF board may cause power to be generated with Key Forward PA but not when used to repeat a call. This is because the RF board uses a locally generated oscillator signal with Key Forward PA and uses the received signal when a call is being repeated.)*

3. If zero or very low PA power is reported, unkey the PA. Remove it from the card cage and examine the connectors on the PA and in the associated PA slot. In particular, pay close attention to the RF power connectors and the dc power pins.

   - If an RF connector in the PA is pushed in, then the PA will have to be replaced.

   - If the RF connector on the card cage receptacle is pushed out, it is possible to reseat the RF connector by pushing it in from the rear of the PA cage while the PA is installed.

4. Examine the coaxial cables that connect the RF card cage to the PA cage, looking for loose connections, broken coaxial, etc.

A.15.4 PA Alarms (Continued)

5. Examine the PA dc breaker associated with the alarmed PA (refer back to Figure 4-3 in Volume 1 for breaker locations). If the breaker is tripped, reset it.

6. Even if no visible problem is seen, reinstall the alarmed PA. Key it again, and examine the reported power. If the power is acceptable now, the problem may be that the PA was improperly seated, or that an earlier PA replacement caused the breaker to trip.

7. If reseating the PA does not fix the problem, or if alarms occur on the same PA within a few days, replace the PA. Key the new PA and examine the power reported.

8. If replacing the PA does not correct the problem, replace the RF board (or temporarily exchange the board with a board from another slot).

9. If replacing the PA and the RF board does not correct the problem, replace the PA interface board.

10. If none of the above procedures correct the problem, replace the PA cage.

☞ NOTE: Once a PA alarm occurs, that PA will show an Out-of-Service Alarm for an indefinite period of time and will not be used for calls. To cause the system to more quickly test an out-of-service PA, the operator may reset the system either by using the RES command or by powering off and then on. However, boosted control channel service will be lost for a few seconds.

It is possible to cause the software to retest a single RF board and PA without loss of service. To do this, use the SET command to bring up RF board status (Main Menu → RF Boards Menu → Position *x* → Status), and select ENABLED. When the ENABLED option is chosen (even if the board is already enabled) the board and PA will be fully initialized and retested. The board/PA will be momentarily keyed and all major functions—including synthesizer lock, PA power output, etc.—will be checked. If no alarms occur, the board and PA will be returned to service. This operation will not cause control channel interruption unless it is performed on the board that is repeating the control channel. To see the results, exit SET and use the ALA command.

A.16 Noise

A.16.1 Burst Noise at the Mobile

Customers complain about noise bursts or periods of muted audio.

Under certain circumstances, noise bursts or periods of muted audio may happen due to the following:

- **Noise Bursts During Hand-back/Grab-back.** If the mobile is in the fringe area of the EAC-2000 out of range from the donor cell, then the mobile will undergo a series of noise bursts as the EAC-2000 attempts to hand the mobile back to the donor cell, and then takes it back. Since the EAC-2000 has no way of knowing whether the mobile is driving back to the donor or out into oblivion, this is a normal consequence.

  The impact of this operation can be reduced by increasing the length of time between hand-back attempts, reducing the number of hand-back attempts, and/or changing the handback threshold. This can be accomplished through the SET menu under System Parameters.

- **PA 6 Hand-off Noise Bursts.** There have been reported instances of noise bursts occasionally being heard on boosted mobiles when the EAC-2000 is setting up a new call. These noise bursts occur when the hand-off transmitter (PA 6) is keyed on for a hand-in transmission and when the correct combination of boosted donor channels exist.

The EAC-2000 uses a different channel set for its boosted channel set. The intermodulation products generated by the high-power voice channel signals therefore fall on a channel set different from that used by the donor cell. Thus, these intermodulation products do not fall on the donor channels that are being boosted. Using a different channel set in this manner allows the EAC-2000 to receive -75 dBm signals with just a few channels separation from the high-power +43 dBm boosted signals.

A.16.1 Burst Noise at the Mobile (Continued)

However, hand-in transmissions by PA 6 are performed on the donor channels. This allows an intermodulation product to be generated, where the difference in frequency between any two EAC-2000 boosted voice channels is mixed with the PA 6 transmission. This product will thus fall on the adjacent (or a multiple of the adjacent, depending on the combination of EAC-2000 voice channels that are active) donor channel on which the hand-off transmission is made. If this product falls on one of the active donor channels which is being boosted, and it is of sufficient amplitude, then a noise burst will be passed through the EAC-2000 to the mobile.

If poor antenna isolation exists at the EAC-2000 the hand-off burst could be stronger than the donor voice signal that is being boosted. In this case, the hand-off intermodulation product will capture the forward voice channel in the EAC-2000 and the hand-off transmission will be passed to the mobile.

In this case, the mobile would be handed to the new channel with obvious disastrous results. This has been rare and has occurred only where the installer has completely disregarded the minimum recommended antenna separation requirements.

Meeting the minimum antenna isolation requirements described in the appendix on isolation will ensure that erroneous hand-off transmissions are not passed to currently boosted mobiles.

The noise burst can be minimized by increasing the isolation between the donor and the M1/M2 antennas. This is most easily accomplished by placing a 10 dB pad (with TNC connections) at the input to the forward preamplifier. This pad would normally be placed on the RCV port of the donor duplexer, with the preamp cable being attached to the pad. In most cases, the EAC-2000 has sufficient forward gain margin to allow this to be done, even at the minimum acceptable donor input signal level of -75 dBm. The donor signal will now read 10 dB lower (i.e., -85 dBm). If the EAC-2000 is being operated at the minimum recommended input signal level, be sure to also move the Donor RSSI Disconnect level in the SET menu down by 10 dB.

A.16.1 Burst Noise at the Mobile (Continued)

For donor signals that are stronger than -60 dBm or so, it is recommended that the pad be placed in the D1 antenna lead rather than at the forward preamp input. The reason for this is that the reverse signal will likely need to be reduced to prevent the signals arriving at the donor from being "too hot" and therefore being above the mobile power cutback threshold at the donor. This pad may be placed either externally on the D1 type N connector, or on the antenna port (TNC) of the donor duplexer. In either case, the power handling capacity of the pad should be one watt minimum.

NOTE: The noise burst problem does not exist in the reverse direction since there are no "equivalent" transmissions made in the reverse direction.

An alternative approach to eliminating the PA 6 hand-off noise burst would be to use a boosted channel set separation that is different than the separation used at the donor cell. For example, if the donor cell uses a 21-channel spacing, then the EAC-2000 can be assigned a 22-20-22-20-22 channel spacing scheme. This will ensure that intermodulation products generated by PA 6 and the boosted output channels will not fall in one of the EAC-2000 input channels.

A.16.2 Transmitter Output Noise, Forward Direction

The EAC-2000 PA outputs occasionally remain with a very noisy signal output after a call has been terminated.

This can happen with an improperly set donor RSSI threshold or if the donor RSSI threshold has been disabled, and particularly if the SAT fade timer is set for an abnormally long period. To prevent this from happening, the SAT fade time in the EAC-2000 should be set to match the donor cell SAT fade time, and the donor RSSI threshold should be set 10 dB below the signal level received from the donor cell site.

A.17 Trouble Locking Onto Control Channel

Subscribers have trouble locking onto the EAC-2000 boosted control channel.

The EAC-2000 contains a crystal-based reference oscillator. The frequency calibration of the reference oscillator is trimmed as close as possible at the factory. However, like all crystals, the oscillator exhibits an aging characteristic, and the calibration may drift over time.

If drifting does occur, the frequency of the EAC-2000 boosted control channel may need to be adjusted.

Refer to Appendix C for adjustment procedures.

Appendix B
Isolation

Contents

Page

B.1 Need for Isolation B-3
B.2 Achieving Antenna Isolation B-4
B.2.1 Physical Separation B-4
B.2.2 Hints for Optimizing Physical Separation B-6
B.2.3 Operation with Antenna Isolation of Less Than 80 dB B-9
B.2.4 Additional Techniques B-9
B.3 How to Measure Antenna Isolation B-10
B.3.1 Using a Spectrum Analyzer with Tracking Generator B-10
B.3.2 Using a Spectrum Analyzer with Signal Generator B-11
B.3.3 Using a Spectrum Analyzer and EAC-2000 . . . . . B-11

B.1 Need for Isolation

In order to discuss narrowband high-power frequency translated repeaters, it is necessary to understand the concept of antenna isolation. This is most easily explained by discussing broadband on-frequency boosters (bi-directional amplifiers).

Broadband cellular boosters, such as the Antenna Specialists Co.'s Extend-A-Cell® II and Decibel Products' Prism Plus™, require isolation between the donor and coverage antennas to prevent direct RF oscillation. This oscillation is induced by positive feedback when the output signal is being received and re-amplified by the input. This condition is similar to the audio feedback that sometimes occurs in public address systems (the squeal or screech).

In general, this isolation must be at least 10 dB in excess of the gain set in the device. If a broadband booster gain of 75 dB is desired, antenna isolation must be at least 85 dB. This isolation may vary as a function of frequency, so it is important that the isolation be checked across the entire cellular spectrum. It is also important to note that isolation may be degraded by antenna icing, additional antennas or feedlines installed on the antenna support, as well as other factors.

The EAC-2000 high-power translating repeater system also needs a significant amount of isolation to operate properly. System gain in the EAC-2000 exceeds 120 dB, but direct RF oscillation is not a factor due to frequency translation and narrowband filtering. Isolation can be significantly below 120 dB.

There are two reasons that antenna isolation is required in the EAC-2000 system:

- Because only a few channels may exist between the input and output frequencies, the *noise floor* inherent in the high-power transmitting path can *desensitize* the donor (forward path) receiver.

- The high-power *data messages* sent by PA 6 on the M2 antenna can mix with the control channel and any voice channels in use and cause *intermodulation products*. If one of these products falls on the donor input channel of a call in progress, the mobile may hear a noise burst, or worse, respond to a hand-in message. The result would be a "cross-connected" call or two mobiles on the same EAC-2000 output channel.

B.1 Need for Isolation (Continued)

If antenna isolation in excess of 80 dB is achievable, then the EAC-2000 will operate successfully with no other action being required. This appendix describes—

- Recommended installation techniques and practical hints for achieving antenna isolation.
- Techniques for obtaining successful operation under less than ideal conditions (< 80 dB antenna isolation).
- Techniques for measuring isolation.

B.2 Achieving Antenna Isolation

There are two primary ways of achieving antenna system isolation:

- Physical separation between the antennas. This is sometimes augmented by placing physical barriers between the antennas if there is insufficient physical space.

- Attenuation in series with the donor antenna path.

B.2.1 Physical Separation

Physical isolation can be achieved by either vertical or horizontal separation. Horizontal separation is generally not recommended by itself as it requires a significantly greater distance to obtain the equivalent isolation that would be provided by vertical separation. Horizontal separation is generally successful only when there is some physical barrier between the antennas.

Figure B-1 illustrates the isolation typically obtainable with horizontal separation, unity gain antennas, and no intervening structures. Note that more than 200 feet (60 meters) is required to obtain only 65 dB of isolation. This distance is impractical for most installations. However, this isolation would be increased by the front-to-back ratios of directional antennas and transmission line losses.

Figure B-2 shows the isolation obtainable with vertical separation. Twenty-five feet can give up to 65 dB, while 60 feet (18.3 meters) provides more than 75 dB. This will vary depending upon the vertical beamwidths of both antennas, their directional characteristics (if any), their placement on the supporting structure, and the composition of the supporting structure.

Figure B-1. Antenna Isolation versus Horizontal Separation

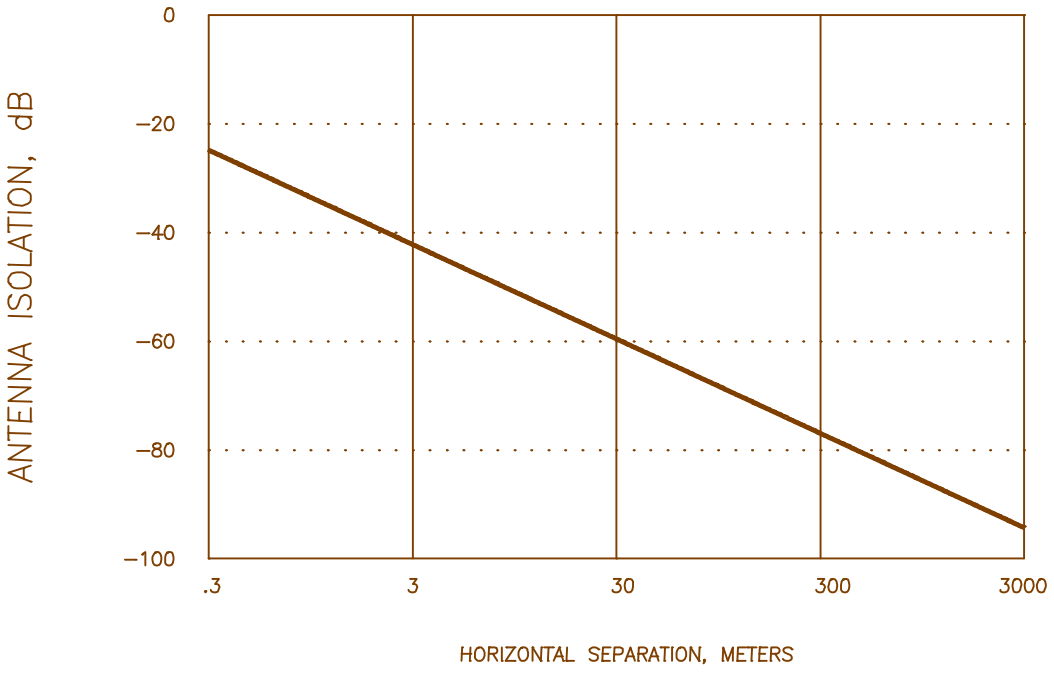

Figure B-2. (Dipole) Antenna Isolation versus Vertical Separation

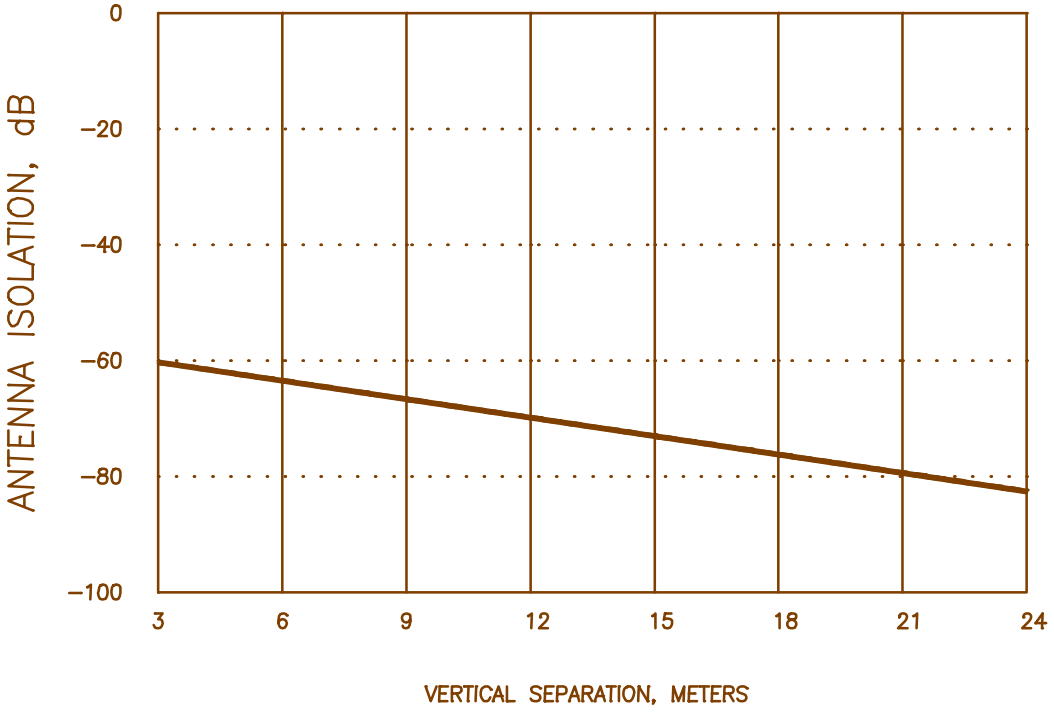

B.2.1 Physical Separation (Continued)

Higher isolations for a given antenna separation are possible where directional antennas are used and their coverage patterns do not overlap. Metal towers often give better isolation than wooden poles when directional antennas are mounted on opposite sides of the tower. Note that reflections from nearby structures (within several hundred feet) become predominant when trying to achieve isolation in excess of 80 dB.

B.2.2 Hints for Optimizing Physical Isolation

The following list illustrates some of the antenna installation techniques that may be used to optimize antenna isolation. Figure B-3 depicts a typical tower-mounted antenna installation.

1. Place the antennas vertically in-line on the mounting structure to take full advantage of the deep nulls off the ends of high-gain vertically polarized antennas.

2. Use high gain antennas. High gain antennas typically have sharper nulls off the ends of the antenna. The use of a circular dish-type parabolic reflector donor antenna reduces the vertical as well as the horizontal beamwidth of the antenna and thus provides higher isolation to antennas mounted above or below it than does a partial parabolic reflector or corner reflector with a single dipole element. Consider a 60-degree 17 dBd gain sector type antenna over a partial parabolic antenna with a dipole element as this antenna typically has a 6–7 degree vertical beamwidth.

3. Consider using a metal antenna support instead of a wooden pole. Isolations observed on wooden poles have been highly variable, with some installations having excellent isolation (particularly with directional antennas for both the mobile coverage and donor antennas) while others have had poorer isolation than that achievable on a metal tower. Also, wooden poles with their attendant antenna installation arrangements (e.g., wooden cross-arms) are subject to warpage or out-of-plumb installation. This can seriously tilt the antennas and cause poor coverage.

Figure B-3. Tower Mounted Antenna Installation

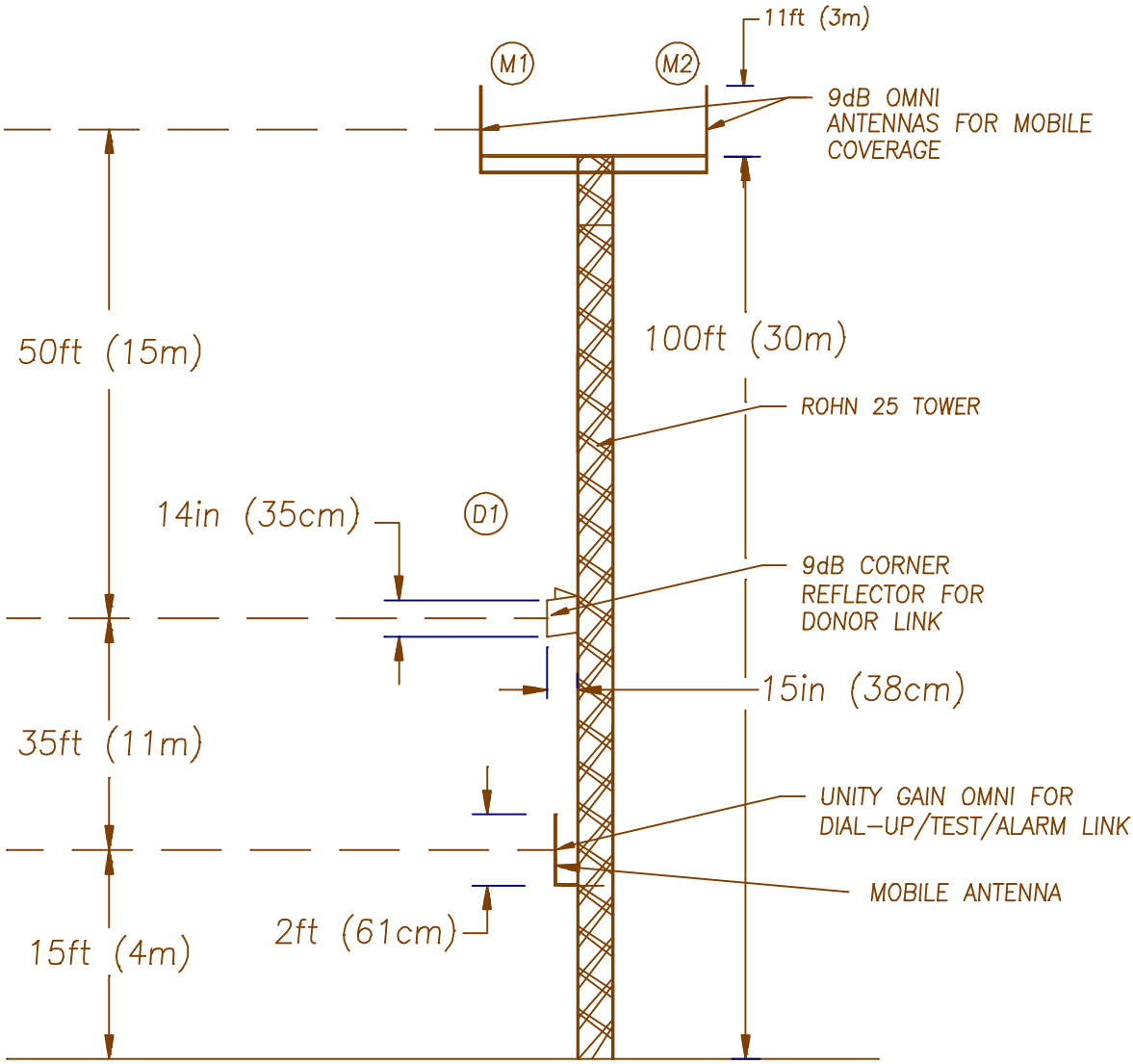

B.2.2 Hints for Optimizing Physical Isolation (Continued)

4. In addition to vertical separation, place the donor and M1/M2 antennas on opposite sides of a metal tower. While this contradicts technique 1 above somewhat, the presence of the metal structure between the two antenna systems, while maintaining vertical separation, can sometimes provide an additional 10 dB, or more, of isolation.

5. In difficult cases, the use of an ice shield or other metal flat-screen structure between the vertically separated donor and M1/M2 antennas can be used to improve isolation. The metal screen should have bonded joints and be a minimum of 3 feet (1 meter) square. A 10-feet-square (3-meter-square) screen gives superior performance, but may prove to be physically impossible to keep on the tower or pole. The screen should be mounted 1 to 2 feet (.5 to 1 meter) above the donor antenna, shielding it from all view of the coverage antennas. It may be necessary to "fine-tune" the shield placement for optimum performance.

6. Structures found on the roofs of many buildings can provide isolation between antennas even if little or no vertical separation is possible. For example, mount the donor antenna over the side of the building and mount the coverage antennas at the other side of the roof, preferably with a penthouse or elevator shaft between. Sometimes a penthouse, especially if it is of metal construction, can give sufficient isolation by itself. If construction is of wood or block, metal sheeting may be placed on the inside or outside walls to increase isolation.

7. Very high isolations can be achieved by using earth as the blocking medium. Isolations in excess of 130 dB have been reported for tunnel applications.

☞ NOTE: Nearby structures, such as other towers or buildings, can degrade antenna isolation if both antennas are exposed to reflections from these structures.

B.2.3 Operation with Antenna Isolation of Less Than 80 dB

When separation alone cannot give the required isolation, it is necessary to use attenuators in the donor signal path. Attenuators, or "pads," will increase isolation dB for dB. That is, a 10 dB pad will improve the isolation by 10 dB.

☞ In an EAC-2000 installation, isolation is much more important than donor signal level.

Although a -75 dBm donor input level is specified, this includes a 10 dB fade margin which is seldom needed on the point-to-point paths found in typical EAC-2000 installations. Also, a high D1 input signal level from the donor equates to a high signal level being sent back to the donor from the EAC-2000. This can cause the cell site to make power control decisions based on EAC signal strength, which could cause dropped calls.

In view of the above, the following attenuation guidelines are recommendations:

- With donor signal > -65 dBm, use a 10 dB or greater pad at the D1 duplexer ANT port. Aim for donor RSSI of -75 dBm ± 5 dBm

- With donor signal < -65 dBm but > -76 dBm, use a 10 dB pad at the D1 duplexer LOW port. Donor signal levels (after the pad) should not fall below -85 dBm. If the signal levels may fall below -78 dBm, the Donor RSSI release threshold must be reset to -90 dBm.

B.2.4 Additional Techniques

If interference or cross-connected calls still persist after all attempts at improving antenna isolation (either physically or artificially with attenuators) have been exhausted, the following suggestions may yield further improvement:

- Interference due to the transmitter noise floor can be reduced by increasing the separation between the donor and boosted channel sets. Increasing the separation to at least 6 and no more than 11 channels will help many stubborn cases.

B.2.4 Additional Techniques (Continued)

- If short noise bursts or cross-connected calls due to hand-off PA intermod are reported, they can be eliminated by adopting an alternating boosted channel set spacing. That is, instead of setting the boosted channel set spacing to the same increment (usually 21) as the donor, alternate the channel spacing on a 20-22-20-22-20 channel basis. This will move any locally generated intermodulation products off the channels that are being received from the donor.

B.3 How to Measure Antenna Isolation

B.3.1 Using a Spectrum Analyzer with Tracking Generator

Antenna isolation is most effectively measured using a spectrum analyzer with tracking generator.

1. Connect the tracking generator output to the end of the transmission line going to the M1 or M2 antenna.

2. Connect the spectrum analyzer to the end of the transmission line going to the D1 antenna.

3. Set the tracking generator output at maximum (usually 0 dBm). Use an accessory amplifier, if available, to boost this output to at least +20 dBm.

4. Set the spectrum analyzer to sweep first the low split and then the high split. The isolation is then the spectrum analyzer reading plus the tracking generator output. *(For example, if the spectrum analyzer reads -50 dBm and the tracking generator output is +20 dBm, the isolation is 70 dB.)*

   Note that isolation is often frequency dependent, with several nulls and peaks possible in each band. The highest peak in either band defines the minimum isolation that is achieved with this particular antenna configuration. Be sure to discount any signals being received by the antenna connected to the spectrum analyzer. Note these signals with the tracking generator turned off. These signals will likely be higher than the signal being generated by the tracking generator and may make measuring the actual isolation difficult. Also, many spectrum analyzers have difficulty measuring signals below -60 dBm to -70 dBm

B.3.1 Using a Spectrum Analyzer with Tracking Generator (Continued)

when sweeping a broad bandwidth. This may limit the ability to accurately measure isolation unless smaller bandwidths are used.

B.3.2 Using a Spectrum Analyzer with Signal Generator

A second method of measuring isolation uses a signal generator rather than the tracking generator as the signal source. The signal generator frequency and amplitude can be manually changed to avoid conflict with existing strong signals from the donor (and other) cell sites. The spectrum analyzer sweep bandwidth can also be narrowed to achieve greater sensitivity for measuring actual isolation. The signal generator should be manually swept through both the low split and the high split bands to determine the minimum isolation point.

B.3.3 Using a Spectrum Analyzer and EAC-2000

A third method to measure isolation uses the EAC-2000 itself as the signal source and is relatively simple to accomplish with a spectrum analyzer and the following procedure. (This procedure should be done <u>after</u> the unit is programmed and the combiner is tuned.)

1. Connect the D1 antenna feedline to a spectrum analyzer.

2. Go into SET and select menu B, Power Amplifiers.

3. Key up PA 1 through PA 11 in sequence and note the level on the spectrum analyzer for each channel. Also note the PA power reading in dBm.

4. Calculate the isolation:

   Isolation = PA dBm -3 dB (combiner/duplexer loss) - D1 dBm.

   Since this D1 dBm measurement is a negative number, this can be simplified:

   Isolation = PA dBm + |D1 dBm| -3

B.3.3 Using a Spectrum Analyzer and EAC-2000 (Continued)

Example:

PA dBm = 46, D1 dBm = -30, |D1 dBm| = 30

Isolation = 46 +30 -3

Isolation = 73 dB

5. Take the highest readings obtained from PAs 1–5 and 7–11 to calculate an isolation value for the M1 antenna. Take the readings from PA 6 to calculate the isolation value for the M2 antenna. To get a more accurate reading of isolation on the M2 antenna, we recommend temporarily exchanging the M1/M2 antenna connections and rereading the values received when keying PAs 1–5 and 7–11.

Appendix C
Reference Oscillator Adjustment

C.1 Adjusting the Reference Oscillator (If Needed)

The EAC-2000 contains a crystal-based reference oscillator. The frequency calibration of the reference oscillator is trimmed as close as possible at the factory and should not require adjustment at the time of installation.

However, like all crystals, the oscillator exhibits an aging characteristic, and the calibration may drift over time. To maintain the specified accuracy over time, the frequency of the EAC-2000 boosted control channel should be checked periodically and adjusted, if necessary, to compensate for long-term aging.

NOTE: Do NOT use voice channels as a basis for frequency adjustment, since the EAC-2000 oscillator accuracy contributes only a small part of the accuracy on voice channels.

C.1.1 Adjustment Procedure

There are two approved vendors for the oscillator. The following shows a typical adjustment session for one of them. The procedure for the other vendor merely uses *T8* in place of *T7* in the following sequence.

The easiest way to tell which vendor oscillator is installed is simply to try one. If the software indicates "*acknowledge errors*," or if the frequency does not move, then use the other.

At the command entry level prompt >:

Entry	System Response
RFC<CR>	TYPE "H" FOR HELP
#T7<CR>	TRIMMING POT 7 ENTER C, U or D (Center, Up, or Down); RET when finished:
CUUUUUDDU<CR>	(no response)
#<ESC>	>

C.1.1 Adjustment Procedure (Continued)

The pot should be centered any time an adjustment is made. This not only centers the pot, but also ensures that the software and hardware variables are initialized properly. This may actually cause the frequency to move several parts off. The U's and D's may then be used to trim it back in.

> CAUTION! If the frequency seems to be very far off, especially at installation time, be sure the measurement equipment you are using is calibrated accurately.

AMPS
EAC-2000™ Manual

Glossary and Index

27-7659-2

Issue 12/95

© Copyright 1995 Allen Telecom Systems
All Rights Reserved

ALLEN TELECOM GROUP
SYSTEMS
DIVISION™

Glossary

AMPS – Advanced Mobile Phone System. Cellular standard that provides compatible operation in the 824–849 and 869–894 MHz band.

Boost – To receive, amplify, and reradiate signals to fill in weak coverage areas.

Boosted Control Channel – The control channel used between the booster and the mobiles in the booster coverage area (a different frequency than the donor control channel).

Booster – A system that boosts or repeats.

Booster Coverage Area – The area where subscribers obtain coverage through the booster.

Booster Link Channel – A dedicated channel in an EAC-2000 in Multi-hop configuration. When the EAC-2000 responds to a call, it transmits a continuous data message over the booster link channel, which the next booster in the chain decodes in order to identify the channel on which the call is boosted.

Command Entry Level – The level at which the software system accepts three-letter commands. Indicated by the prompt character >.

D1 Antenna – The primary antenna facing the donor cell site, used for reception of control and voice channel signals from the donor cell site and for transmission of control and voice signals back to the cell site.

Donor Cell Site – The cell site in communication with the booster.

Donor Control Channel – The control channel used between the cell site and the booster (and all the mobiles in direct contact with the cell site).

EAC-2000™ – The trademarked name for a booster made by Allen Telecom Systems.

Forward Path – The path taken by the RF signal transmitted by the donor cell, which is received, amplified, and reradiated by a booster and received ultimately by a subscriber in the booster coverage area.

Grab-back Message – A second voice channel assignment message sent to a mobile leaving the booster coverage area, directing the mobile to come back to the boosted voice channel. If the donor's signal is stronger, the mobile will ignore the grab-back message; if the EAC-2000 signal is stronger, the mobile will come back to the boosted voice channel.

Hand-back Threshold – Signal level at which a mobile being boosted becomes a candidate for returning to the original donor site voice channel. This threshold is set as an operating parameter for the individual system.

Hand-in Threshold – Signal level at which a mobile on one of the donor voice channels becomes a candidate for boosting. This threshold is set as a parameter for the individual system.

Hand-off – The process of transferring a boosted call back to the donor cell or to another booster or cell.

Inactivity Timeout – A programmable period of time after which, if no keyboard entries have been received, the EAC-2000 software system will terminate any running commands and end the session.

M1 Antenna – Primary antenna facing the mobiles in the booster coverage area. Used for transmission of the boosted control channel and boosted voice channels to the mobiles, and for diversity reception from the mobiles.

M2 Antenna – Secondary antenna facing the mobiles in the booster coverage area, used for sending hand-off messages to the mobiles and for diversity reception from the mobiles.

Mobile Antenna – Antenna for the installed cellular mobile facing the donor cell site.

Modem Mobile MIN – Assigned mobile identification number of the mobile cellular telephone.

Multi-hop Operation – Two or more EAC-2000 units set up to operate together in a line to provide seamless cellular coverage (e.g., along a traffic corridor). Each booster in the line communicates with the previous and next unit.

PA – Power Amplifier

Primary Donor Cell – When a booster is adjacent to several cell sites, the control channel of the cell with the best signal is chosen as the donor control channel, and this cell is referred to as the primary donor cell.

Remote Link – Modem link between the EAC-2000 and another terminal. The remote terminal may be used to exercise the system.

Repeater – Synonymous with **booster**, usually applied to boosters that translate frequencies. The EAC-2000 is type-accepted as a repeater.

Reverse Path – The path taken by the RF signal transmitted by a subscriber mobile in the booster coverage area, which is received, amplified, and reradiated by a booster and received ultimately by the donor cell site.

RSSI – Received Signal Strength Indicator.

SAT – Supervisory Access Tone.

Index

NOTE: Bold Roman numerals indicate volume numbers.

Accessories, **III:** 3-4
  replacing, **Apps.:** Parts-1 to -5
ac
  breaker locations, **I:** 4-3, 4-4
  connections, **I:** 3-5
  (See also Power)
ALA. *(See Command(s))*
Alarm report. *(See Command(s), ALA)*
Alarm(s), **Apps.:** A-23
  connecting external, **I:** 3-7 to -9, **III:** 3-3
  critical, **I:** 4-23 to -24, 5-5, **II:** 2-11, 2-58
  log only, **I:** 4-24
  programming, **I:** 4-19 to -24
  RSSI, **II:** 2-11
  (See also individual alarms—e.g., PA alarms)
Amplifiers. *(See Control channel amplifiers, PAs, Voice channel amplifiers)*
Antenna(s)
  connectors, illustrated, **I:** 3-6
  D1, **I:** 1-7,2-4,2-5,2-6,2-7,2-9, **III:** 2-3
  installation, illustrated, **I:** 2-8, **Apps.:** B-7
  installing, **I:** 3-6, **Apps.:** B-6 to -12
  isolation, **I:** 2-6, 2-7 to -8, 3-6, 7-3, **Apps.:** B-4 to -10
  M1/M2, **I:** 2-4, 2-5, 2-6, 2-7, **III:** 2-3
  mobile, **I:** 2-4, 2-5, 2-6, 2-7, **III:** 2-3
  placement/location of, **I:** 2-2, 2-6
  return loss low alarm point, **II:** 2-10, 2-50
  separation, **I:** 2-6
  types, **I:** 2-4 to-5, **III:** 2-3
Auto-dial
  delay between retries, **II:** 2-6, 2-32
  dial-up phone numbers, **II:** 2-6, 2-30
  enable, **II:** 2-5, 2-29
  max trial period, **II:** 2-6, 2-32
  trials max, **II:** 2-6, 2-31

Backplane. *(See EAC-2000, diagrams, System boards)*
Back-up control channel option, **II:** 2-4, 2-22
Baud rate. *(See Modem—setup, local port, remote port)*
Block diagram. *(See EAC-2000, diagrams)*
Boards. *(See System boards)*
Boosted control channel(s), **II:** 2-4, 2-20, **III:** 2-1
  defined, **I:** 1-3
Boosted control channel(s) (Continued)
  selecting, **I:** 2-12, 7-4 to -5
  setting, **I:** 4-16
Boosted voice channel(s), **II:** 2-5, 2-27
  defaults, **II:** 2-5
  selecting, **I:** 2-16, 7-4 to -5
  setting, **I:** 4-19
Booster link channel, **I:** 4-15, 8-5, **II:** 2-4, 2-24
  - previous EAC, **I:** 4-15, **II:** 2-5, 2-24
Breaker. *(See ac)*
Burse noise, **Apps.:** A-26

Cabinet
  footprint, illustrated, **I:** 3-4
  size, **I:** 2-3, **III:** 3-1
Call processing
  described, **I:** 5-4 to -6**III:** 2-10 to -13
  parameters, **II:** 2-9
  problems, **Apps.:** A-10
  recommendations, **II:** 2-9
Card cage wiring diagram. *(See EAC-2000, diagrams)*
Cellular boosters
  operation, illustrated, **III:** 1-2
  use of, **III:** 1-2
Channel(s)
  assignment, **III:** 1-3
  for combined multi-cab/-hop/-donor operation, **I:** 10-2
  selecting, **I:** 2-11
  (See also Control channel(s); Directed retry channels)
Combined operation. *(See Multi-cabinet, Multi-hop, Multi-donor)*
Combiner
  cavity, illustrated, **I:** 4-27
  reverse, **III:** 2-8
  tuning, **I:** 4-26 to -30
Command(s)
  ALA, **I:** 4-13, **II:** 3-14 to -19
  basic, **I:** 4-7 to -10
  DCH, **II:** 3-27 to -28

Command(s) (Continued)
DCS, **II:** 3-20 to -26
entering, **I:** 4-8, **II:** 1-6 to -8
listed, **I:** 4-9, **II:** 1-9
LOC, **I:** 4-10, **II:** 1-8
MIN, **II:** 3-30 to -31
Command(s) (Continued)
PWR, **II:** 3-12
RES, **I:** 4-8, 4-10, **II:** 1-8
REV, **II:** 3-32
RSS, **II:** 3-9 to -10
SAT, **II:** 3-13
SCS, **II:** 3-5 to -8
SET, **I:** 4-8, **II:** 2-1 to -60
special, **II:** 4-1 to -2
SSR, **I:** 4-9, **II:** 3-11
SSS, **I:** 4-13, **II:** 3-1 to -4
syntax, **I:** 4-7, **II:** 1-6
system monitoring, **II:** 3-1 to -32
TIM, **I:** 4-32, **II:** 3-29
Communication parameters. *(See Modem—setup, Local port, Remote port)*
Compliance with standards, **III:** 3-4
Console timeout, **II:** 2-5, 2-29
Continuous cycles, escaping from, **I:** 4-8, **II:** 1-8
Control channel(s)
amplifiers, **III:** 2-1
boosting, **I:** 1-5
parameters, **II:** 2-4
response, **I:** 7-1, **III:** 2-14 to -15
RF board to use for, **II:** 2-4, 2-20
state during "all channels busy", **II:** 2-4, 2-21
(See also Boosted control channel(s); Donor control channel(s); Revertive control channel; Substitute control channel)
Controller board. *(See System boards)*
Critical alarm(s). *(See Alarms)*
Cross-talk, **Apps.:** A-21

D1. *(See Antenna(s))*
DCH. *(See Command(s))*
DCS. *(See Command(s))*
Delay between hand-in attempts. *(See Hand-in)*
Dial command. *(See Modem—setup)*
Dial prefix string *(See Modem—setup)*
Dial-up phone numbers. *(See Auto-dial)*
Directed retry channels, **I:** 2-14, 4-15, **II:** 2-4, 2-22
setting, **I:** 4-16
Disconnect parameters, **II:** 2-9
Donor control channel(s), **I:** 1-6, 4-24, **II:** 2-4, 2-19, **III:** 2-11
defined, **I:** 1-3
identifying, **I:** 2-11
Donor control channel(s) (Continued)
RSSI, alarm points, **I:** 4-24, **II:** 2-59
setting, **I:** 4-15
(See also Control channel(s))
Donor RSSI, **II:** 2-9, 2-46
Donor voice channel(s)
identifying, **I:** 2-15 to -16
lists, **I:** 1-6, **II:** 2-5, 2-26 to -27, **III:** 2-11
RSSI, high alarm point, **I:** 4-24, **II:** 2-60
setting, **I:** 4-17 to -18
Doors, securing, **I:** 3-5
Dropped calls, **Apps.:** A-6, A-14, A-18, A-20
Dynamic forward power control algorithm, **II:** 2-52

EAC-2000
answering, **I:** 5-4
combined with EAC-IVs, **I:** 7-4
concept, **III:** 2-1 to -2
diagrams, end of Vol. 3
illustrated, **I:** 3-2, 3-3, **III:** 3-6, 3-7, 3-8
operation, **I:** 1-4 to -7, **II:** 1-2 to -5, **III:** 2-3 to -5
originating, **I:** 5-5
specifications, **III:** 3-1 to -3
Environment, **III:** 3-1
Equipment characteristics, **III:** 3-4 to -5
Erratic operation of EAC-2000, **Apps.:** A-23
External alarms/controls. *(See Alarms)*

Fan activation. *(See PA, temperature)*
Figures, listed, **I:** vi, **II:** vi, **III:** v
Footprint. *(See Cabinet)*
Forward PA
power low alarm point, **II:** 2-3, 2-15
power step, **II:** 2-3, 2-15
(See also Key forward PA)
Forward path, **I:** 1-2, 1-4, **III:** 2-4
defined, **I:** 1-3
Frequency allocation, **I:** 1-4, **III:** 1-3

Gain, **III:** 3-2
Grab-back, **I:** 1-7, **III:** 2-12

Hand-back, **I:** 1-6, **III:** 2-12
max num attempts per call, **II:** 2-9, 2-47
min delay between attempts, **II:** 2-9, 2-48
mobile power step, **II:** 2-8, 2-43
Hand-back/grab-back control, **II:** 2-9, 2-49
Hand-back threshold(s), **II:** 2-8, 2-43, **III:** 2-12
determining, **I:** 6-1
setting, **I:** 6-2
setting for Multi-hop, **I:** 7-5 to -7
Hand-in, **III:** 2-11
delay between attempts, **II:** 2-8, 2-45
excessive, **Apps.:** A-15
mobile power step, **II:** 2-8, 2-43
none (troubleshooting), **Apps.:** A-16
Hand-in threshold(s), **II:** 2-8, 2-41
determining, **I:** 6-1
setting, **I:** 6-2
Hand-off(s)
cellular system, **Apps.:** A-7
messages, **III:** 2-5
noise bursts, **Apps.:** A-26
to a new cell, **III:** 2-13
Hang-up string *(See Modem—setup)*
Hardware installation, **I:** 3-1 to -10

Inactivity timeout, **I:** 4-10, **II:** 1-8
Initialization string *(See Modem—setup)*
Inputs/outputs
alarm states, **II:** 2-10
electrical specifications for, **I:** 3-8
external analog, **II:** 2-55
external digital, **II:** 2-56, 2-57
typical wiring for, **I:** 3-9
Interchangeability of equipment, **III:** 3-4
Interface specifications, **III:** 3-3
Isolation
achieving, **Apps.:** B-4 to -9
measuring, **I:** 2-9, **Apps.:** B-10 to -12
need for, **Apps.:** B-3

Key forward PA, **II:** 2-3, 2-16
Key reverse PA, **II:** 2-3, 2-16

Local link, **III:** 2-16
establishing, **II:** 1-2 to -3
Local port
baud rate, **II:** 2-7, 2-35
comm params, **II:** 2-7, 2-36
Locking onto control channel, **Apps.:** A-29
Log only alarms *(See Alarms)*

M1, M2. *(See Antenna(s))*
Main harness wiring diagram. *(See EAC-2000, diagrams)*
MDU *(See Multi-donor operation)*
Mechanical
installation, **I:** 3-4 to -5
specifications, **III:** 3-1
Menu(s)
Alarms, **II:** 2-50
Call Processing Parameters, **II:** 2-48
Control Channels, **II:** 2-19
Menu(s) (Continued)
Critical Alarms, **II:** 2-58
Disconnect Control, **II:** 2-46
External Analog Inputs, **II:** 2-55
External Digital Inputs, **II:** 2-56
External Digital Outputs, **II:** 2-57
Modem Control, **II:** 2-28
Power Amplifiers, **II:** 2-14
RF Board Position, **II:** 2-13
RF boards, **II:** 2-12
SET Main, **II:** 2-12
SET, using, **I:** 4-11, **II:** 1-7
SET menu map, **I:** 4-12, **II:** 2-2
Site ID, **II:** 2-17
System Parameters, **II:** 2-17
Thresholds and Power Control, **II:** 2-40
Voice Channels, **II:** 2-25
Microcontroller, **III:** 2-6
MIN. *(See Command(s))*
Mobile
antenna *(See Antenna(s))*
checking out, **I:** 5-2
dynamic power control threshold, **II:** 2-8, 2-41
power control causes PA power cutback, **II:** 2-10, 2-53
power step, **I:** 4-25, **II:** 2-6, 2-39
programming, **I:** 5-2
RSSI > threshold, **II:** 2-9, 2-49
shelf, **III:** 2-9 *(See also EAC-2000, diagrams)*
setting up service, **I:** 5-2
Modem, **III:** 3-5
control parameters, **II:** 2-5 to -6
equipment, **I:** 5-1
erratic operation, **Apps.:** A-22
mobile MIN, **I:** 4-25, **II:** 2-6, 2-38, 3-30
mobile power step, **II:** 2-6, 2-39
setup parameters, **II:** 2-6 to -7
setup strings, **II:** 2-6, 2-33 to -35

Mounting
the cabinet, **I:** 3-4
surface, **I:** 2-4
Multi-cabinet operation, **I:** 10-1 to -3
Multi-donor activation threshold, **I:** 8-2, 8-4, **II:** 2-8, 2-42, **III:** 2-14
Multi-donor operation, **I:** 1-6, 2-1, 2-6, 8-1 to -4, **III:** 2-13
installing EAC-2000 for, **I:** 8-2
with Multi-cabinet/-hop, **I:** 10-1 to -3
Multi-hop operation, **I:** 2-2, 2-6, 4-13, 7-1 to -8, **II:** 2-4, 2-18, **III:** 2-14 to -15
Multi-hop operation (Continued)
enabling, **I:** 7-3 to -4
installing EAC-2000 for, **I:** 7-2 to -8
with Multi-cabinet/-donor, **I:** 10-1 to -3
selecting boosted channels for, **I:** 7-4

Noise, **Apps.:** A-27

Optimizing performance, **I:** 6-1 to -2
Output power, setting, **I:** 4-26 to -31
Outputs. *(See Inputs/Outputs)*

Parameter(s)
alarm, **II:** 2-10 to -11
initial, **I:** 4-13 to -25
power amplifier, **II:** 2-3
RF board, **II:** 2-3
summaries, **II:** 2-3 to -11
system, **II:** 2-4 to -9
Parts, ordering, **Apps.:** Parts-1 to -5
PA(s)
45-watt, **III:** 2-8
cage wiring diagram. *(See EAC-2000, diagrams)*
to antenna loss - high alarm point, **II:** 2-10, 2-51
interface board, **III:** 2-9
power levels, adjusting, **I:** 4-26 to -30
power potentiometer, illustrated, **I:** 4-28
setting power low alarm points, **I:** 4-31
temp - fan activation point, **II:** 2-10, 2-51
temp - high alarm point, **II:** 2-10, 2-51
temp - PA power cutback point, **II:** 2-10, 2-52
Password(s), **I:** 4-25, **II:** 2-5, 2-28 to -29
bypassing, **I:** 1-3
Pin out, external alarm/control connector, **I:** 3-7

Power
class. *(See Station power class)*
control parameters, **II:** 2-8, 2-40 to -45
cutback point. *(See PA, temp)*
levels *(See PAs)*
output, **III:** 3-2
service requirements, **I:** 2-3
specifications, **III:** 3-1
(See also ac connections)
Power supply
described, **III:** 2-9
shelf wiring diagram, **III:** 3-10
voltage parameters, **II:** 2-10, 2-53 to -54
Powering up/down, **I:** 4-3
Preamplifiers, **III:** 2-8
Primary donor cell, **I:** 1-7, **III:** 2-10, 2-11
PWR. *(See Command(s))*

Quick start procedures, **I:** ix

Reference oscillator adjustment, **Apps.:** C-1 to -2
Regulator module, **III:** 2-9
wiring, illustrated, **III:** 3-9
Reliability, **III:** 3-5
Remote link, **III:** 2-16
EAC-2000 answering, **I:** 5-3
EAC-2000 originating, **I:** 5-4
establishing, **II:** 1-4 to -5
installing, **I:** 5-1 to -6
testing, **I:** 5-4 to -6
Remote port
baud rate, **II:** 2-7, 2-36
comm params, **II:** 2-7, 2-37
handshake, **II:** 2-7, 2-38
Report values, setting, **I:** 4-32
Reports/readings, examples
ALA, **II:** 3-15
DCH, **II:** 3-28
DCS, **II:** 3-21
MIN, **II:** 3-30
PWR, **II:** 3-12
RSSI, **II:** 3-9
SAT, **II:** 3-13
SCS, **II:** 3-5
SSS, **II:** 3-2
TIM, **II:** 3-29
REV. *(See Command(s))*
Reverse PA
power low alarm point, **II:** 2-3, 2-16
power set, **II:** 2-3, 2-15
(See also Key reverse PA)

Reverse path, **I:** 1-3, 1-4, **III:** 1-2, 2-4
setting output power, **I:** 4-30
Revertive control channel option, **I:** 2-12, **II:** 2-4, 2-23, 3-25
RF board(s), **III:** 2-6
diversity, **II:** 2-3, 2-14
status, **II:** 2-3, 2-13
to use for control channel, **II:** 2-4, 2-20
RF specifications, **III:** 3-2
RSS. *(See Command(s))*
RSSI, **III:** 3-2
alarm points, **II:** 2-11, 2-59
averaging speed, **II:** 2-8, 2-44
(See also Donor RSSI, Mobile RSSI, Donor control channel(s), Donor voice channel(s))

SAT
fade timeout, **II:** 2-9, 2-47
(See also Command(s))
SCS. *(See Command(s))*
Separation of antennas, **I:** 2-6, 3-6, **Apps.:** B-4 to -6
(See also Antenna(s))
Service
for mobile, setting up, **I:** 5-2
skills required , **III:** 3-5
SET, **II:** 2-1 to -60
exiting, **I:** 4-11, **II:** 1-7
menu map, **I:** 4-12, **II:** 2-2
moving through menus, **I:** 4-11, **II:** 1-7
Set defaults feature, **II:** 2-60
Setups, unsuccessful, **Apps.:** A-18
Signal level/strength, **I:** 2-6, 3-7, 7-3
at MDU, **I:** 8-3
measuring, **I:** 2-9 to -10
weak, from donor, **Apps.:** A-6
Site
ID, **I:** 4-14, **II:** 2-4, 2-18
requirements, **I:** 2-2 to -4
Space recommendations, **I:** 2-3
Specifications, **III:** 3-1 to -4
SSS. *(See Command(s))*
Start-up procedures. *(See Quick start)*
Station power class selective boosting, **II:** 2-8, 2-45
Substitute control channel, **I:** 2-13, 4-15, **II:** 2-4, 2-23
SYN LOC alarms, **Apps.:** A-23
System boards, **III:** 2-6 to -9
backplane, **III:** 2-7
controller, **III:** 2-7
PA interface, **III:** 2-9
(See also RF boards)
System status, **I:** 4-13

Talk-back range, **Apps.:** A-11
Temperature. *(See PA, temperature)*
Terminal
connecting, **I:** 4-5
location of connector, illustrated, **I:** 4-5
Threshold(s)
parameters, **II:** 2-8, 2-40 to -45
programming, **I:** 4-19 to -24
TIM. *(See Command(s))*
Time values, setting, **I:** 4-32
Transmitter combiner. *(See Combiner)*
Transmitter output noise, **Apps.:** A-28
Troubleshooting, **Apps.:** A-1 to -27

Voice channel(s)
amplifiers, **III:** 2-2
boosting, **I:** 1-5
parameters, **II:** 2-5
(See also Boosted voice channel(s); Donor voice channel(s))

Warranty, iii
Wiring diagrams. *(See EAC-2000, diagrams)*

Parts & Accessories
Order Information

This section provides procedures for ordering or exchanging parts and accessories, a list of replaceable assemblies for the EAC-2000™, and reference drawings. Warranty information is given in the front of this manual.

☞ NOTE: Field troubleshooting beyond the assembly level should NOT be attempted. Construction is comprised of machine-placed surface mount components. Special factory test fixtures are required for repair.

Replacing Parts and Accessories

To order spare or replacement assemblies, refer to the following instructions:

I. Exchange Procedures: Units Under Warranty

Failed EAC-2000 parts or assemblies that are still under the manufacturer's warranty can be exchanged by following these procedures:

1. Obtain the EAC-2000 serial number. The serial number is labeled on each of the system components.
2. Call the Extend-A-Cell Hotline: (800) 800-EAC4 (3224) or 216-349-8413. Be prepared to supply the unit serial number and any other pertinent information. Refer to the following parts list and reference drawings to identify specific parts and their locations.
3. Repair parts/assemblies will be shipped. Allen Telecom Systems will ship replacement parts or assemblies with a Return Materials Authorization form. This form must be used to return failed parts or assemblies to Allen Telecom Systems. All parts are shipped next day air, free of charge, unless otherwise instructed by the customer.
4. Return failed parts/assemblies to Allen Telecom Systems according to instructions on the Return Materials Authorization form.

☞ The customer account will be billed for the full value of the replacement part or assembly at the time of shipment. The account will be credited when the failed parts/assemblies are received by Allen Telecom Systems.

II. Exchange Procedures: Units No Longer Under Warranty

Selected EAC-2000 parts or assemblies that are no longer under warranty can be replaced through Allen Telecom Systems' exchange program. This program permits customers to exchange a failed part or assembly for a working part or assembly, for a nominal charge. Contact Allen Telecom Systems, Systems Engineering Department, to determine which parts and assemblies can be exchanged under this program.

To take advantage of this program, follow the procedures listed above under *I. Exchange Procedures: Units Under Warranty.*

☞ The customer account will be billed for the full value of the replacement part or assembly at the time of shipment. The account will be credited when the failed part/assembly is received by Allen Telecom Systems. The customer account will be billed a nominal exchange charge. All parts are shipped at the customer's expense.

III. Purchasing Spare Parts

Spare parts for the EAC-2000 can be purchased by contacting Allen Telecom Systems, Customer Service Department at (216) 349-8677 or (800) 321-9977 for prices and delivery. Refer to the following list and illustrations to identify specific parts and their locations.

☞ Spare or replacement parts orders can be processed more efficiently when items are identified by their part number. The Systems Engineering Department of Allen Telecom Group can assist customers with locating and verifying the correct part number. Customers should be prepared to provide the unit model and serial number, which are printed on labels affixed to each unit.

Replaceable Parts/Assemblies for EAC-2000

The following list includes service parts/assemblies that are frequently purchased as spares and is not inclusive of all parts/assemblies that are available for the EAC-2000. Items not included in this list may be ordered by contacting Allen Telecom Systems Customer Service Department.

Number on Reference Drawing	Part Number	Description
1	19-5612-1	Reverse Combiner Module
2	19-5598-1	Controller Board
3	19-5838-1	D1 Duplexer
4	19-5613-1	Forward Preamp Module
5	19-5599-1	RF Board
6	21-117-1	45-Watt Power Amplifier
7	19-5588-1	PA Interface Board
8	19-5627-1	Power Sensor
9	59-12-1	28 Vac Power Supply
10	19-5620-1	Regulator Module
11	19-5614-1	Reverse Preamp Module

Reference Drawings

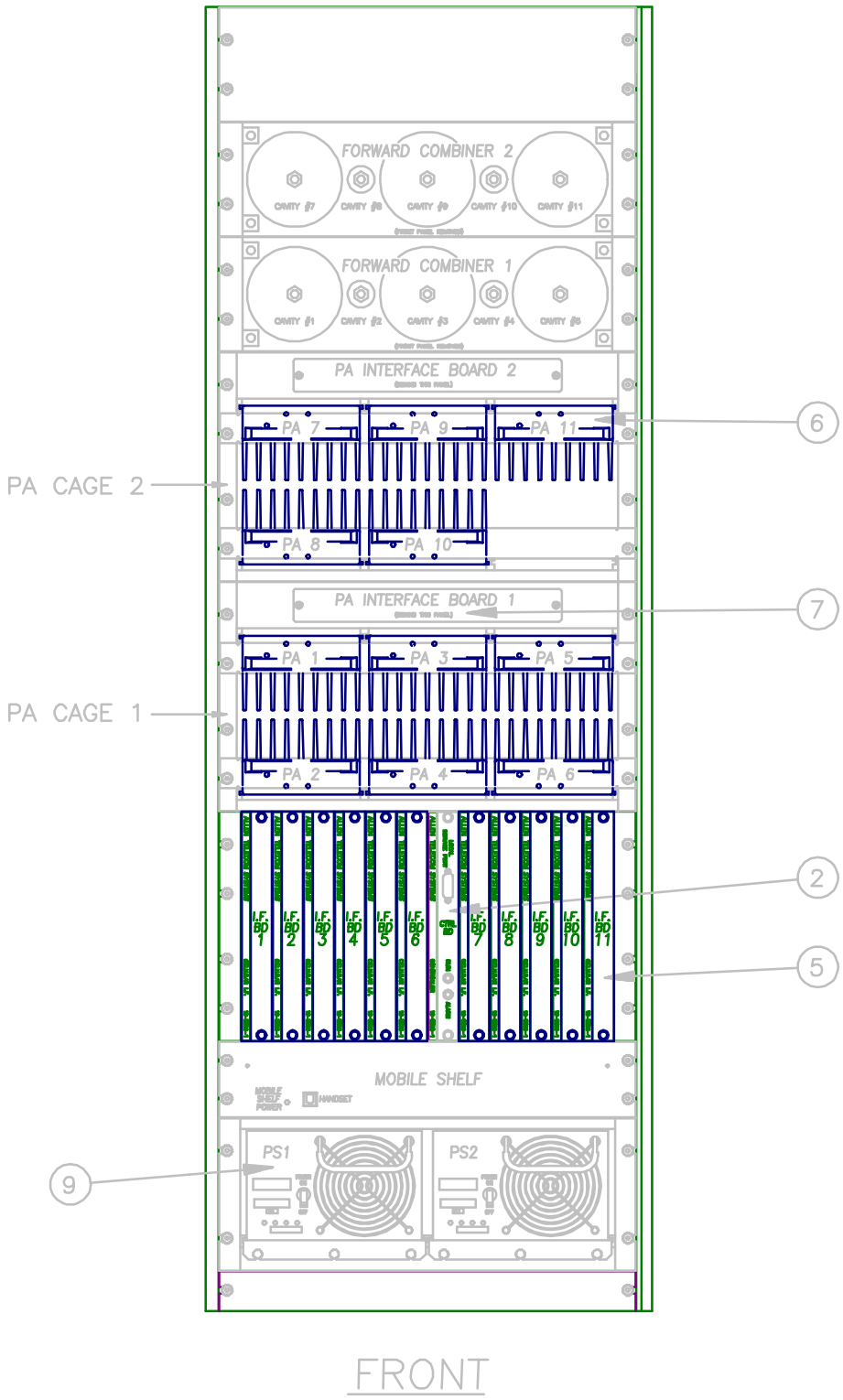
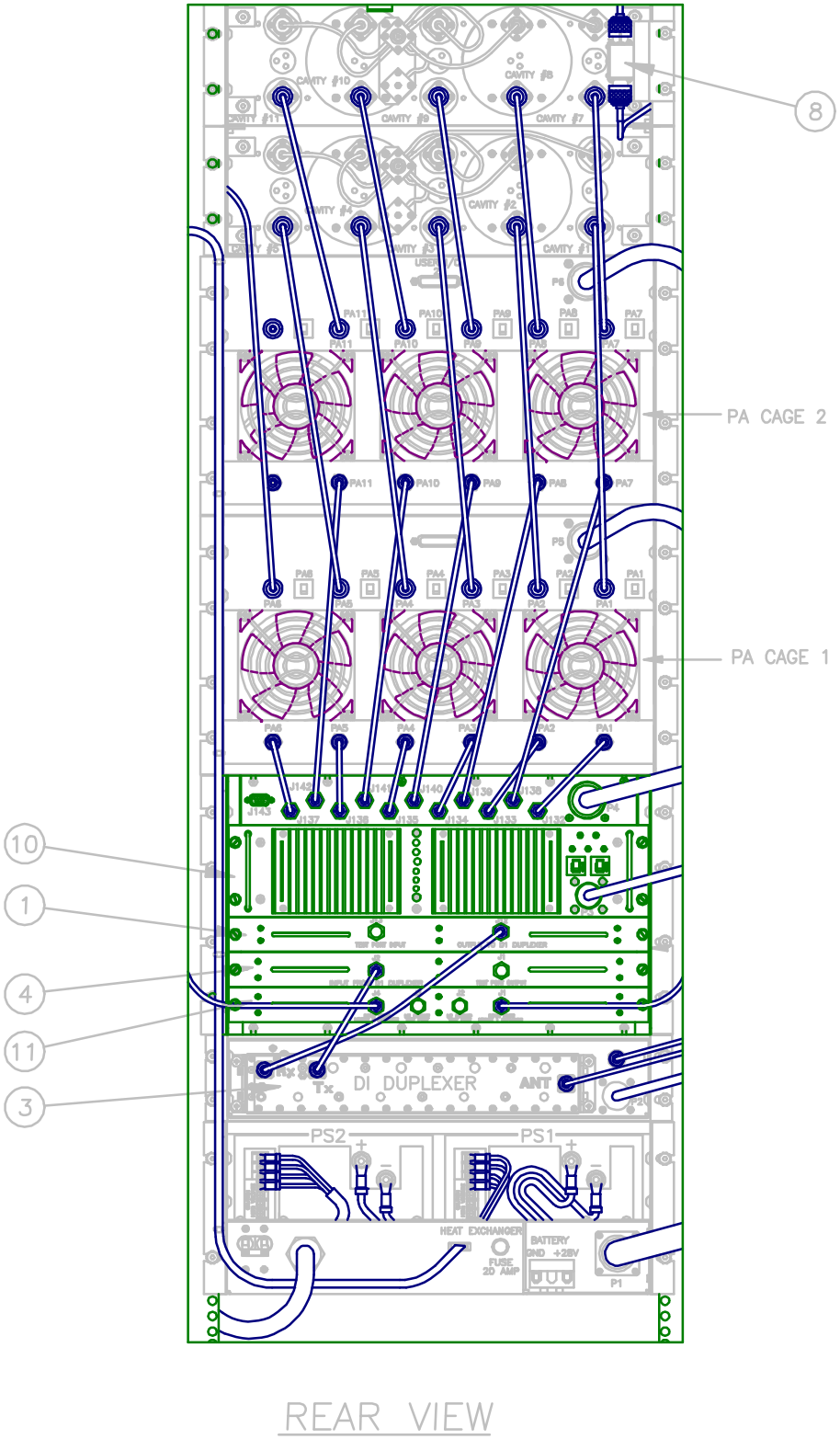
Reference Drawings (Continued)