# zoom 5363

## WiFi Voice Gateway

### *Install Sheet*

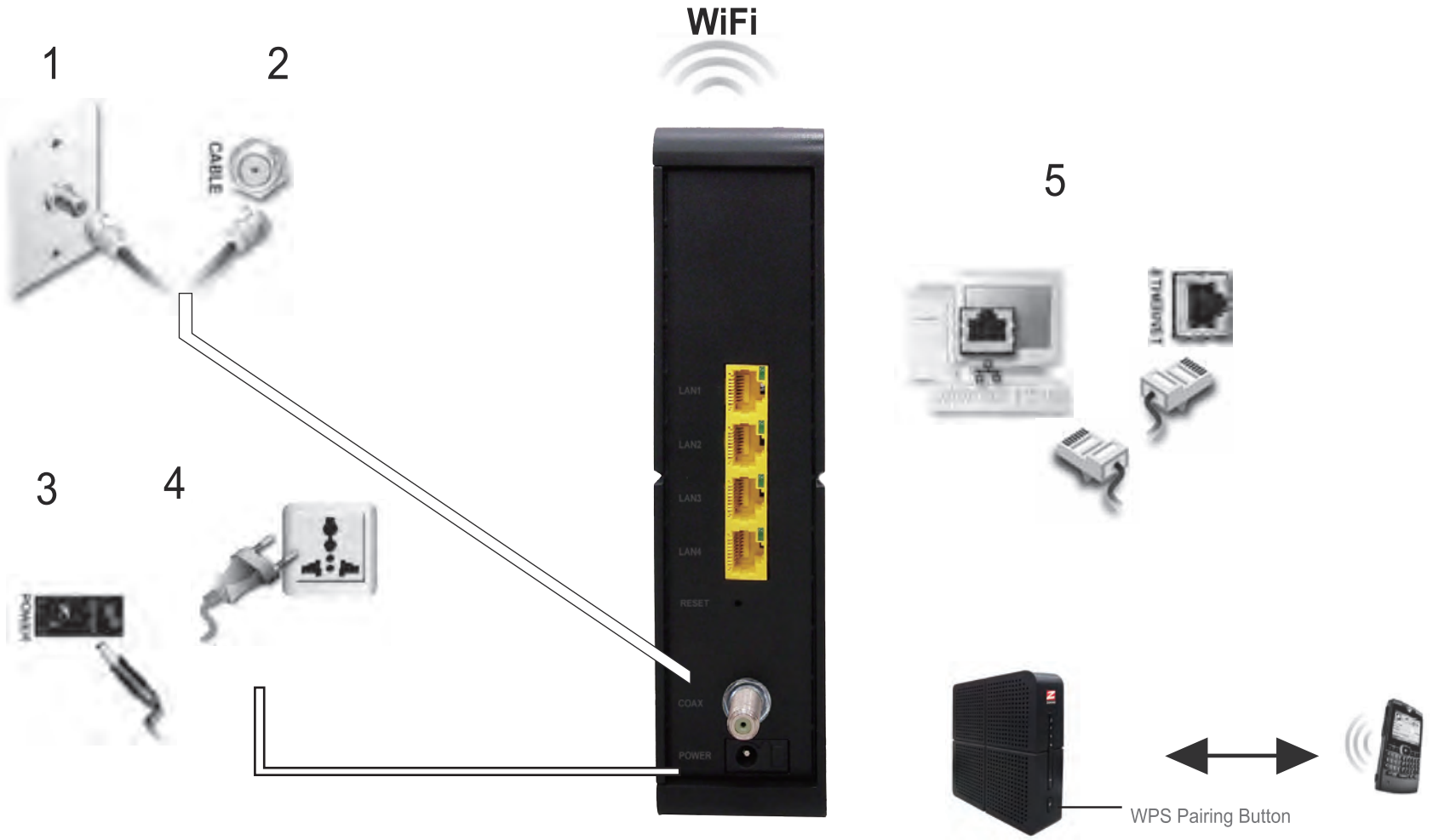

# zoom 5363
## WiFi Voice Gateway

## *Install Sheet*

## *Troubleshooting*

**This information is to help you quickly solve a problem. Before calling your service provider, try unplugging and plugging the power cord in the AC wall outlet to restart the gateway.**

| The Problem | The Solution |
|---|---|
| Green POWER light is OFF | Check that the 5363 WiFi Voice Gateway is plugged into the AC adapter and wall outlet. |
| Cannot receive or send data | If you have cable TV, check that your TV is working and the picture is clear.<br>If you cannot receive your regular TV channels, your data service will not function. |
| | Check the IP address by following the steps in “Verifying the IP Address” in the User Guide. On computers using UNIX or Linux, you must have Adobe Acrobat Reader installed before opening the User Guide. Call your cable provider if you need an IP address. |
| | Check the lights on the front panel. Note the first light from top to bottom that is off. This light indicates |

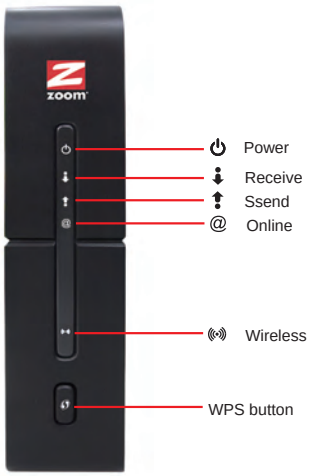


See the dimensioned view below for the spacing needed between the screw head and wall for wall mount installation:

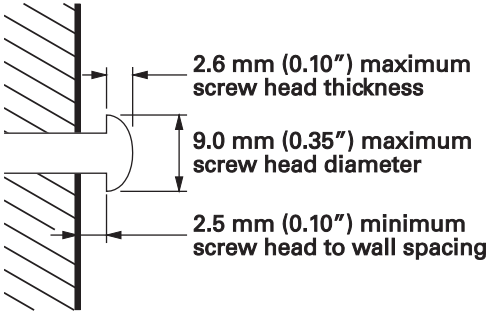


Note to CATV System Installer pay attention to Section 820.93 of the National Electric Code, which provides guidelines for proper grounding and, in particular, specifies that the coaxial cable shield shall be connected to the grounding system of the building, as close to the point of cable entry as practical.

# zoom 5363

## WiFi Voice Gateway

## *Install Sheet*

## *Federal Communication Commission Interference Statement*

This equipment has been tested and found to comply with the limits for a Class B digital device, pursuant to Part 15 of the FCC Rules. These limits are designed to provide reasonable protection against harmful interference in a residential installation. This equipment generates, uses and can radiate radio frequency energy and, if not installed and used in accordance with the instructions, may cause harmful interference to radio communications. However, there is no guarantee that interference will not occur in a particular installation. If this equipment does cause harmful interference to radio or television reception, which can be determined by turning the equipment off and on, the user is encouraged to try to correct the interference by one of the following measures:

- Reorient or relocate the receiving antenna.
- Increase the separation between the equipment and receiver.
- Connect the equipment into an outlet on a circuit different from that to which the receiver is connected.
- Consult the dealer or an experienced radio/TV technician for help.

FCC Caution: Any changes or modifications not expressly approved by the party responsible for compliance could void the user's authority to operate this equipment.

This device complies with Part 15 of the FCC Rules. Operation is subject to the following two conditions:
(1) This device may not cause harmful interference, and
(2) this device must accept any interference received, including interference that may cause undesired operation.equipment.

FCC RF Radiation Exposure Statement:
This equipment complies with FCC RF radiation exposure limits set forth for an uncontrolled environment.
This equipment should be installed and operated with minimum distance 25cm between the radiator & your body.

According to FCC 15.407(e), the device is intended to operate in the frequency band of 5.15GHz to 5.25GHz under all conditions of normal operation. Normal operation of this device is restricted to indoor used only to reduce any potential for harmful interference to co-channel MSS operations.

Internal dual band 3x3 MIMO antenna arrays with Beamforming for optimal Wi-Fi performance
For product available in the USA/Canada market, only channel 1~11 can be operated. Selection of other channels is not possible.

This device and it's antennas(s) must not be co-located or operating in conjunction with any other antenna or transmitter except in accordance with FCC multi-transmitter product procedures.

150000000000C