WIRELESS NETWORKING

ANTENNA OPTIONS and INSTALLATION INSTRUCTIONS

ZoomAir Wireless Network Interface Cards are available with either an integrated antenna or an external antenna. The 11Mbps ZoomAir, supporting both PCMCIA and PCI formats, and shipping with the ZoomAir Hardware Access Point, comes with an external dipole antenna, providing more uniform coverage and up to 30% greater range in specific settings. Additional antenna models are available to meet specific wireless networking installation needs.

MAXIMIZING RANGE

The built-in patch antenna on the PCMCIA and PCI Models has a horizontal pattern shaped like a cone. When using two ZoomAir cards with the integrated patch antenna in an office environment where set-up is less than 10 ft. apart, you can minimize packet errors by placing the units on different planes. Once the units are further than 10 ft. apart, the antenna signals will reflect off walls, tables, and people, thus changing signal polarization. Outdoor polarization has an even greater effect. If there are not any objects in the path of the two radio cards, the two cards should be on different planes to achieve the best range and to minimize packet errors.

The external dipole antenna model has an omni pattern. It transmits and receives signals equally in all directions. When using ZoomAir cards with external dipole antennas, it's best to have them all oriented in the same direction. If you have one card with a dipole antenna and another with an integrated antenna, we recommend that the dipole be at 90° to the integrated patch.

With all cards, placement is very important. If one computer is under a desk, loss will occur. Glass and metal will also cause degradation (e.g., inside a car). Weather conditions such as snow and rain water increase signal attenuation. Essentially, different materials affect the propagation of radio waves: Some cause more attenuation than others. See below for some common examples:

• Wood	Floors	**Low**
• Plaster	Walls	**Low**
• Glass	Windows	**Low**
• Water	Damp Wood; Aquariums	**Medium**
• Bricks	Inner and Outer Walls	**Medium**
• Marble	Inner Walls	**Medium**
• Paper	Paper Rolls	**High**
• Concrete	Floors and Outer Walls	**High**
• Metal	Desks; Partitions	**Very High**

ANTENNAS

■ DIPOLE ANTENNA

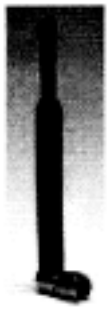

The **ZoomAir 2.2 dBi Dipole Antenna Model #98110-02** is supplied as standard equipment with the 11Mbps ZoomAir Wireless Network Interface Card and the ZoomAir Hardware Access Point. It attaches directly to each device's built-in antenna jack. The ZoomAir Dipole Antenna's radiation pattern is omni-directional: It transmits and receives signals equally well in all directions. When compared with the 11 Mbps ZoomAir Model with the NIC's integrated antenna, the ZoomAir Dipole typically provides more uniform coverage and up to 30% greater range.

Model 98110-02 Specifications	
Frequency range	2.4-2.483 GHz
Gain[1]	2.2 dBi
Polarization[2]	Linear
Nominal impedance	50 ohms
Connector	Reverse polarity SMA male (plug)
Dimensions	3.25”(82mm) length; 9/32”(7mm) diameter
Weight	< 0.5 oz (<14gm)

Omni-directional to 300 ft. (90m) in a typical partitioned office or 1,000 ft. (300m) with an unobstructed line of sight

■ OMNI-DIRECTIONAL ANTENNA

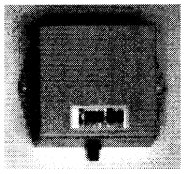

ZoomAir 4.0 dBi Omni-Directional Antenna Model #98110-04 can be mounted on a ceiling for use as an omni-directional antenna, or mounted on a wall to provide increased range in a single direction. The antenna attaches to the 11 Mbps ZoomAir Wireless Network Interface Card or a ZoomAir Hardware Access Point through a 1-meter or 3-meter low-loss coaxial cable (sold separately). Cable length can be extended to a maximum recommended 6 meters by attaching additional cable segments using a supplied adapter. The ZoomAir Omni-Directional Antenna package includes mounting hardware.

Model 98110-04 Specifications	
Frequency range	2.4-2.484 GHz
Gain[1]	4.0 dBic (circular)
3 dB beamwidth (elevation)	220° (typical)
Polarization[3]	Right-hand circular
Nominal impedance	50 ohms
Connector	Reverse polarity SMA female (jack)
Dimensions	3”W (7.6cm) x 3”H (7.6cm) x 1.5” (3.8cm)
Weight	3.0 oz (85 gr)

Ceiling mounted for a radius coverage of 380ft.(115m) in a typical partitioned office or 1,500ft.(455m) in an unobstructed environment. Directional range to 450ft. (115m) in a partitioned office or 1275ft.(390m) in an unobstructed environment.
Omni-directional to 300 ft.(90m) in a typical partitioned office or 1,000 ft.(300m) with an unobstructed line of sight

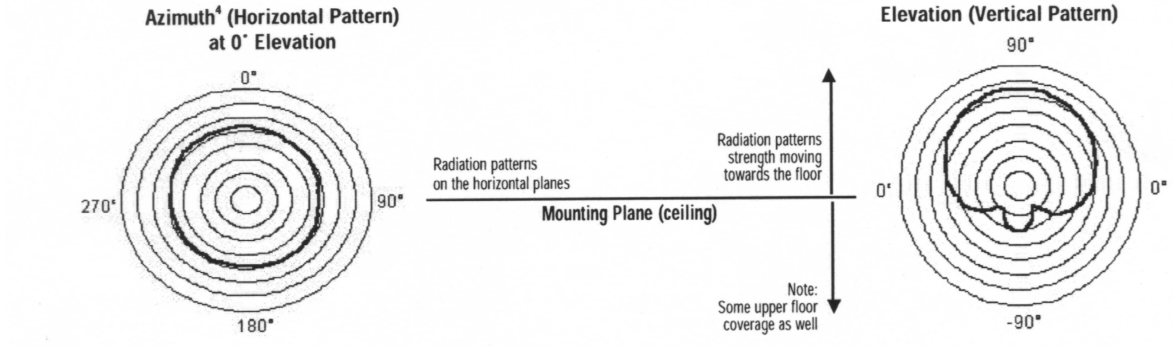

■ DIRECTIONAL ANTENNA

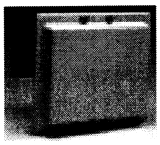

A range of one mile can be achieved if a line-of-sight position is established using two **ZoomAir 13.0 dBi Directional Antennas Model #98110-13**. The unit is designed for both indoor and outdoor use. Connection is made through a 1-meter or 3-meter low-loss coaxial cable (sold separately). Cable length may be extended to a maximum recommended 6 meters by attaching additional cable segments using a supplied adapter. Mounting/positioning hardware is included.

Model 98110-13 Specifications	
Frequency range	2.3-2.500 GHz
Gain[1]	13.0 dBi
Polarization[2]	Linear
Azimuth and elevation beamwidth	35’
Nominal impedance	50 ohms
Lightning protection	DC grounded
Connector	Reverse polarity SMA female (jack)
Dimensions	8.7”W(22.1cm) x 7.9”H(20.1cm) x 1.4”D(3.6cm)
Weight	0.77 lb (0.35 kg)

Up to1 mile(1.6km) point-to-point unobstructed line of sight

Azimuth[4] (Horizontal Pattern) at 0˚ Elevation

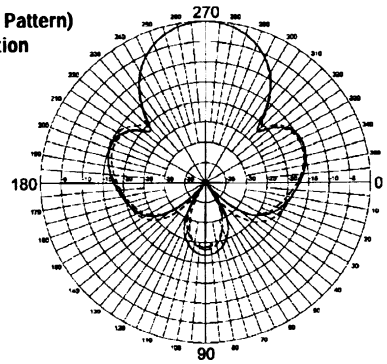

Elevation (Vertical Pattern)

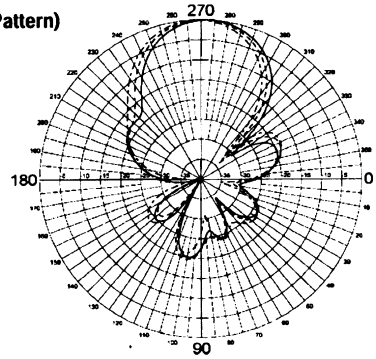

■ MINIATURE DIELECTRIC ANTENNA

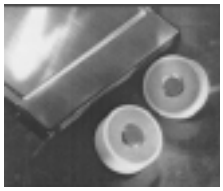

The ZoomAir 2.15 dBi Miniature Dielectric Antenna Model #98110-21 is supplied to OEM’s for installation within their equipment. The antenna attaches to the ZoomAir 11Mbps Wireless Network Interface Card with a 6 inch supplied cable.

Model 98110-21 Specifications	
Frequency range	2.4-2.5 GHz
Gain	2.15 dBi
Polarization[2]	Vertical
Nominal impedance	50 ohms
Connector	Reverse polarity SMA male (plug)
Dimensions	3”W(76mm) 2”H(50mm) wide .382”D (9.7mm)
Weight	.14 oz (4g)

DAC Series

TYPICAL CHARACTERISTICS

Receiving Signal Response vs Frequency

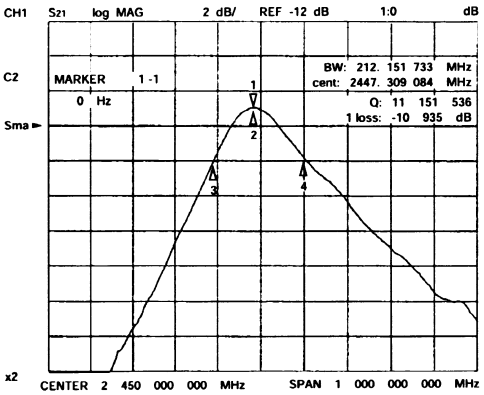

Return Loss

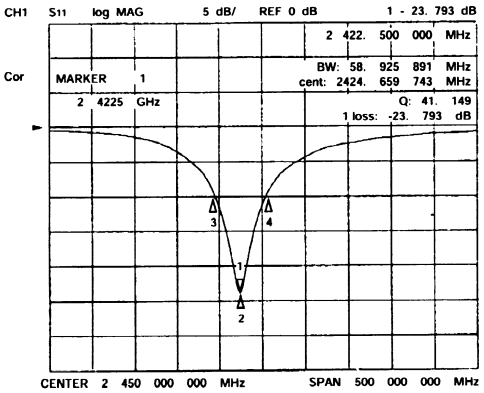

Smith Impedance

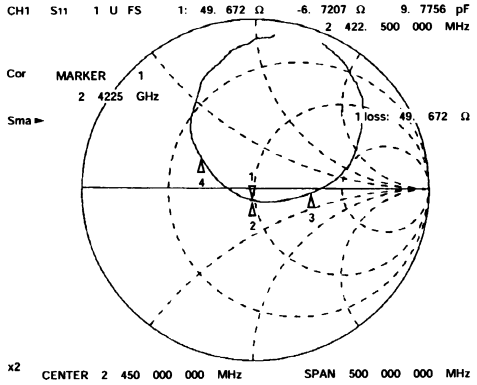

DIRECTIVITY CHART

Horizontal Pattern

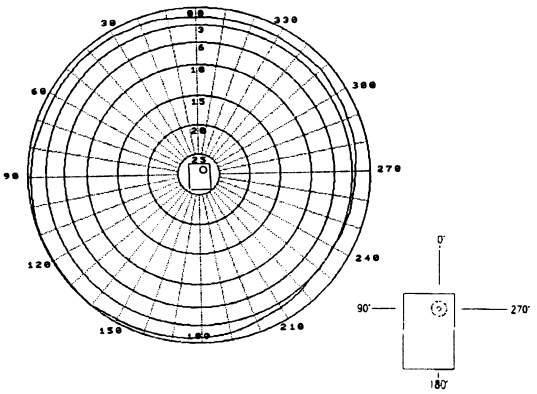

Vertical Pattern

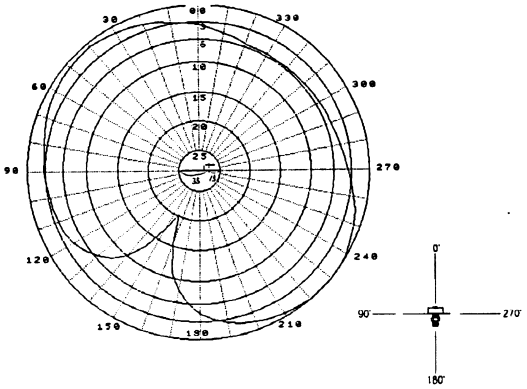

Vertical Pattern

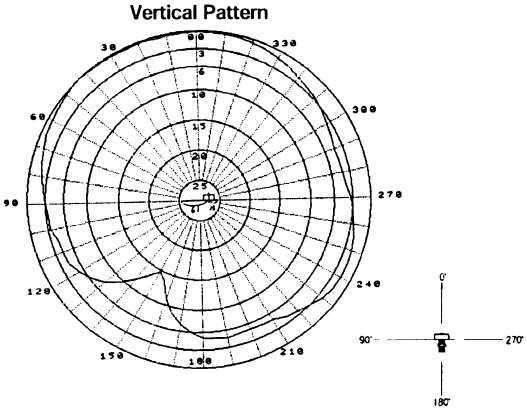

Antenna Products and Application Summary			
98110-02	2.2 dBI dipole onmi-directional antenna with an SMA male (plug) connector – rated at 300 ft. (90m) coverage in a typical indoor office and over 1,000 ft. (300m) space in an open environment. Provided as standard equipment with the 11 Mbps ZoomAir with an external attenna Wireless Network Interface Card and ZoomAir Hardware Access Points.	**98110-13**	13 dBi directional patch antenna with SMA female/jack connector (for indoor or outdoor use) provides up to 1 mile point-to-point range. Includes fully adjustable mounting bracket.
		98112-3	3-meter low-loss cable with SMA male(plug) connectors (total loss of ~1.0 dB); includes an extension adapter (~0.2 dB loss).
98110-04	4.0 dBic (circular) omni-directional antenna with an SMA female(jack) bulk-head connector for improved indoor coverage or point-to-point application use. Typical range: 450 ft.(135m) in an office environment and 1500 ft.(450m) unobstructed point-to-point application use. Mounting hardware included.	**98112-1**	1-meter low-loss cable with SMA male(plug) connectors (total loss of ~0.5 dB); includes an extension adapter (~0.2 dB loss).
		98110-21	2.15 dBi Miniature Dielectric Antenna with cable is provided to OEMs for their installation within their equipment.

Contact Your ZoomAir Dealer or Visit **www.zoom.com**

Footnotes:

1 Gain: Decibel (dBi or dBic for circular) expression for the ratio of the radiation intensity in a given direction relative to a theo-retical isotropic (omni-directional) radiator.

2 Polarization (Linear): A pattern requiring antennas to be placed in the same orientation with close attention to polarization alignment angle (alignment should be within ±5° for optimum performance).

3 Polarization (Right-hand circular): A pattern that reduces the effects of reflections in a typical indoor environment (best suited as an access point).

4 Azimuth: The radiation intensity pattern located in the horizontal plane.

5 Installation must comply with FCC RF exposure requirements.

Important Installation Note:

ZoomAir and its resellers or distributors are not liable for injury, damage, or violation of government regulations, or state and local codes, associated with the installation and use of ZoomAir antenna products. Professional antenna installers are recommended if there are any questions, concerns, unknowns, or liability risk with the handling of these products.

ANTENNA
INSTALLATION INSTRUCTIONS

Caution: For the purpose of satisfying FCC RF exposure compliance requirements, antennas should be positioned in such a way that a separation distance of at least 20cm is maintained between the transmitter's radiating structures and the body of the user or nearby persons.

■ DIPOLE ANTENNA

Remove the antenna from the box. You'll notice that the antenna is L-shaped and the short part of the L has a built-in connector with a silver hexagonal collar. The ZoomAir Card's mating connector has a knurled brass collar.

To maintain consistent antenna orientation, hold the antenna vertically and gently tighten the hexagonal collar on the antenna body until the antenna stays in place. ***Do not attempt to turn the knurled brass collar on the PC Card. It is glued in place.***

Note: If you later want to reposition the antenna due to orientation changes, you must first loosen the antenna's hexagonal nut, reposition the antenna, and then retighten the nut.

■ OMNI-DIRECTIONAL ANTENNA

1. Carefully remove the existing dipole antenna: Gently unscrew the hexagonal collar on the antenna body. ***Do not attempt to turn the knurled brass collar on the PC Card. It is glued in place.***
2. Attach one end of the cable* to the omni-directional antenna and the other to the ZoomAir PC Card. Again, be careful of the collar glued in place.
3. 3A. If you are using a ZoomAir Hardware Access Point, mount the antenna in a central location as an "umbrella" to provide optimal coverage.
   3B. If you are using ZoomAir in a point-to-point application, mount both antennas so that they are facing each other in a line of sight orientation.

■ DIRECTIONAL ANTENNA

1. Carefully remove the existing dipole antenna: Gently unscrew the hexagonal collar on the antenna body. ***Do not attempt to turn the knurled brass collar on the PC Card. It is glued in place.***
2. Attach one end of the cable* to the directional antenna and the other to the ZoomAir PC Card. Again, be careful of the collar glued in place.
3. Using the supplied universal mounting and positioning hardware, position the antenna in a vertical orientation so that the receiving antenna is in the line of sight.

■ MINIATURE DIELECTRIC ANTENNA

1. Mount the antenna as per OEM requirement
2. Attach one end of the cable* to the ZoomAir PCMCIA Card. Again, be careful of the collar glued in place.
3. Attach the other end of the cable* to the antenna.

Note: With the omni-directional and directional antennas, you can couple cables to achieve a recommended maximum length of 6 meters before experiencing an unacceptable signal dB loss.

* Sold separately

See Antenna Options for Selection Information.

ZOOM

World Headquarters
Zoom Telephonics, Inc., 207 South Street, Boston, MA 02111 USA
Tel: 617-423-1072 Fax: 617-423-3923
www.zoom.com

Zoom is a registered trademark. ZoomAir is a trademarks of Zoom Telephonics, Inc.
All other registered trademarks and trademarks used herein are the property of their respective holders.
©2000 Zoom Telephonics, Inc. 25657-C