F1DA2835P

Datasheet

Confidential / Preliminary Documentation
Revision 1.3

List of Contents

1. General
   - 1.1 Overview
   - 1.2 Features
   - 1.3 Application
   - 1.4 Pinout Diagram
   - 1.5 Device Terminal Functions
   - 1.6 Module Dimension

2. Characteristics
   - 2.1 Electrical Characteristics
   - 2.2 RF Characteristics
   - 2.3 Audio Characteristics

3. Interface
   - 3.1 USB
   - 3.2 I2C
   - 3.3 UART0 and UART1
   - 3.4 SPI
   - 3.5 PWM
   - 3.6 Audio Interfaces

4. Application Schematic
5. Antenna Spec
6. Module Placement Rule
7. PCB Layout
8. Reflow Temperature Profile
9. Packing Information
10. Revision History

1. General

1.1 Overview

This specification covers Bluetooth module which complies with Bluetooth specification version 5.3 and integrates RF & Baseband controller in small package. This Module has deployed Action's ATS2835P Chipset

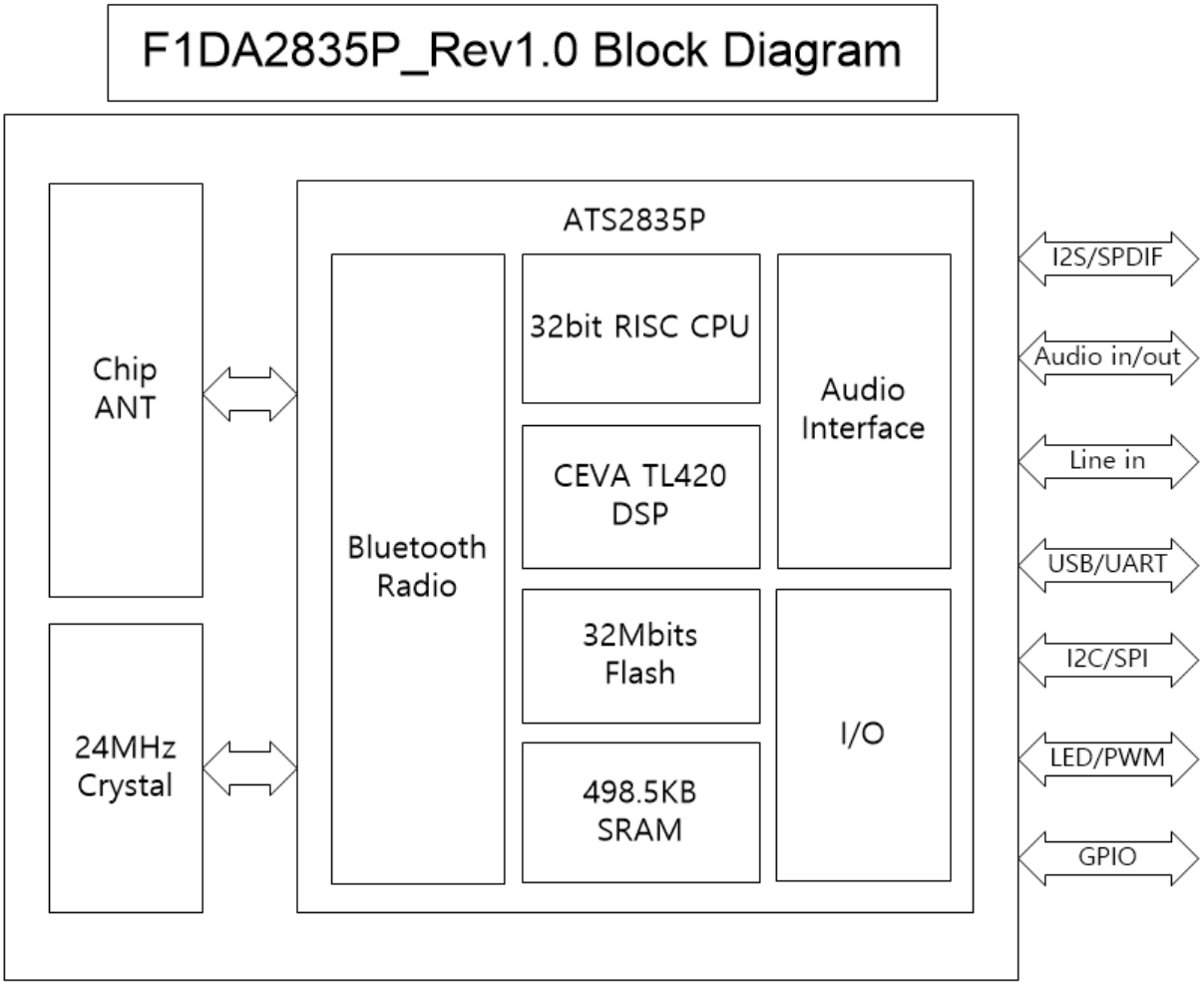

1.2 Features

- Bluetooth supports
  - . Support Bluetooth V5.3
  - . Compatible with Bluetooth V5.2/V5.0/V4.2/V4.2 LE/V4.0/V3.0/V2.1 + EDR
  - . RF performance of 5dbm Transmitter power
  - . -93dBm@GFSK, -92dBm@π/4 DQPSK, -87dBm@8DPSK modulation.
  - . Internal Chip Antenna
- 342MHz CEVA TL420 DSP core
- Audio Interface
  - . I2S TX and I2S RX*2, sampling rate up to 192KHz
  - . SPDIF TX and RX, sampling rate up to 96KHz
  - . Analog and Digital microphone
- Physical interfaces
  - . Supports SD/MMC/eMMC card interface
  - . Supports SDIO interface
  - . USB 2.0 device and host controllers
  - . Serial Interface: SPI*2, UART*2, I2C
  - . Supports Remote Control with internal IRC
  - . Supports LCM with 8bit CPU Interface, 4COM/5COM/6COM Segment LCD, 7pin LED
  - . 9 PWM drivers independent of MCU
  - . Supports 32 GPIO and 1 WIO(wake up IO)
- Memory
  - . Internal 32M bits SPI serial Flash for custom defined software
  - . Internal 498.5KB RAM
  - . Internal 32KB CPU ICache for SPI NorFlash
  - . Internal 32KB Cache for SPI pSRAM
- Improved Audio Quality
  - . SBC & AAC Bluetooth audio transmission format
  - . Stereo Codec

1.3 Application

- Portable stereo speakers
- Bluetooth car audio unit
- Stereo headsets and headphones
- Other Bluetooth audio applications
- Speaker phones

1.4 Pinout Diagram

F1DA2835P_Rev1.1_PINMAP

1. Top View

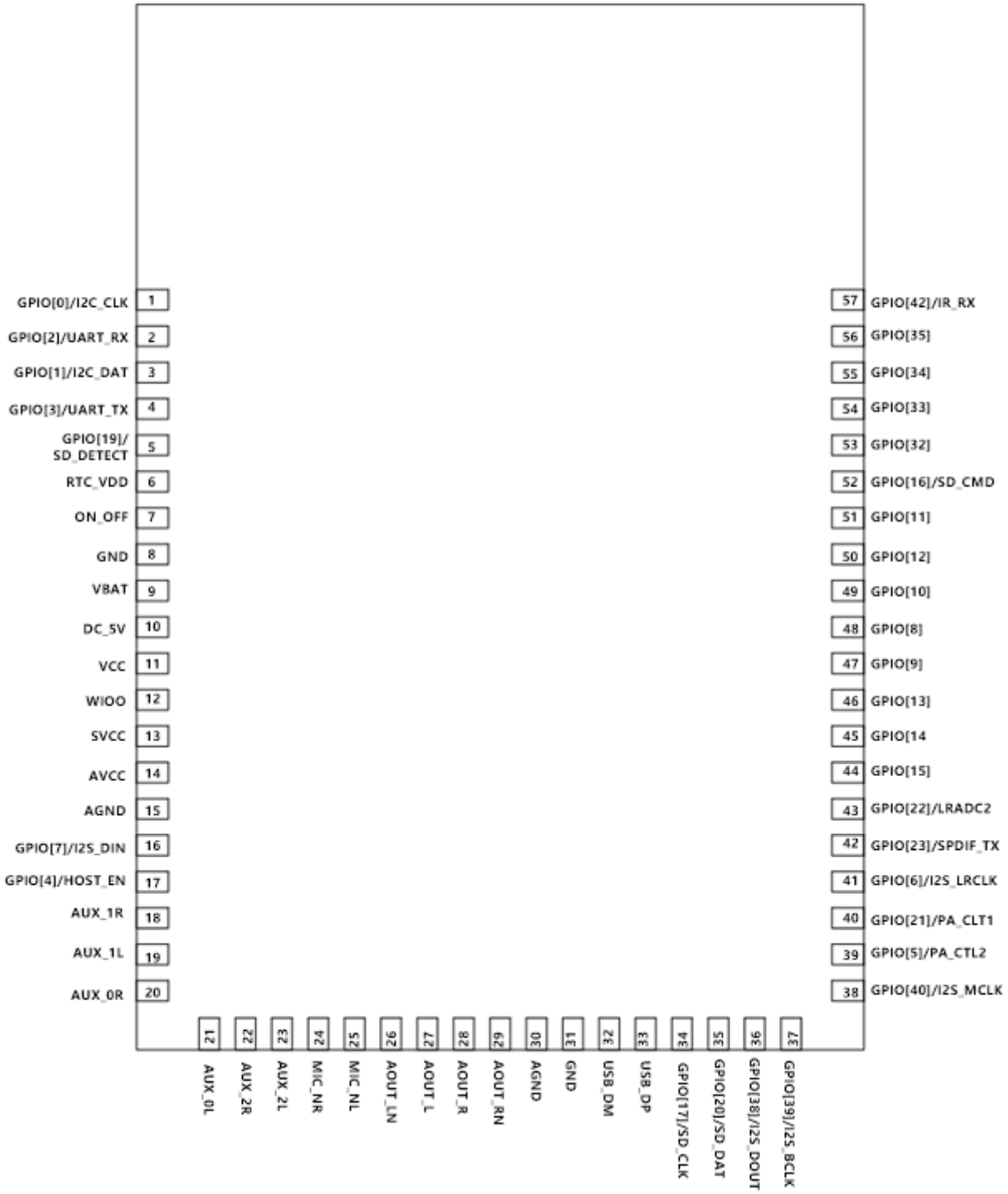

1.5 Device Terminal Functions

Pin No.	Pin Name	Function Multiplex	IO Type	PAD Drive Level	GPIO Initial State	Description
1	GPIO0 /I2C_CLK	LED_COM0 LCD_WRB LCD_COM0 PWM1 UART0_RTS I2STX_MCLK I2SRX0_MCLK I2SRX1_MCLK Timer2_cap SPI2_SS	DIO	2/4/6/8/10/ 12/14/16mA	Z	Bit0 of General purpose I/O port
2	GPIO2	LED_COM2 LCD_RDB LCD_COM2 SPI1_MOSI PWM2 UART0_RX LRADC4 I2STX_LRCLK I2SRX0_LRCLK I2SRX1_LRCLK Timer2_cap SPI2_MOSI	DIO	2/4/6/8/10/ 12/14/16mA	V	Bit2 of General purpose I/O port
3	GPIO1	LED_COM1 LCD_RS LCD_COM1 I2C_SDA PWM3 UART0_CTS I2STX_BCLK I2SRX0_BCLK I2SRX1_BCLK Timer3_cap SPI2_MISO	DIO	2/4/6/8/10/ 12/14/16mA	Z	Bit1 of General purpose I/O port
4	GPIO3	LED_COM3 LCD_CEB LCD_COM3 SPI1_CLK UART0_TX I2STX_DOUT I2SRX0_DIN I2SRX1_DIN Timer3_cap SPI2_CLK	DIO	2/4/6/8/10/ 12/14/16mA	V	Bit3 of General purpose I/O port
5	GPIO19	LCD_SEG17 I2C_SDA Timer3_cap	DIO	2/4/6/8/10/ 12/14/16mA	Z	Bit19 of General purpose I/O port
6	RTC_VDD		PWR			RTC power
7	ON_OFF		AI			ON/OFF reset signal

8	GND		GND			GND
9	VBAT		PWR			Battery Voltage input
10	DC_5V		PWR			5.0V Voltage
11	VCC		PWR			Digital IO PWR
12	WIO0	LRADC1	DIO	2/4/6/8/10/ 12/14/16mA	WIO 0	LRADC1
13	SVCC		PWR			PWR for standby
14	AVCC		PWR			Analog IO PWR
15	AGND		GND			Analog GND
16	GPIO[7] /I2S_DIN	LED_COM7 PTA_GRANT LCD_SEG1 SPDIF_RX PWM0 UART1_TX FMCLKOUT I2STX_DOUT I2SRX1_DIN Timer3_cap SD1_DAT3	DIO	2/4/6/8/10/ 12/14/16mA	Z	Bit7 of General purpose I/O port
17	GPIO[4] /HOST_EN	LED_COM4 LCD_CEB LCD_COM4 PWM1 Timer2_cap IR_RX	DIO	2/4/6/8/10/ 12/14/16mA	Z	Bit4 of General purpose I/O port
18	AUX_1R	GPIO49	AI/DIO	2/4/6/8/10/ 12/14/16mA		Linein right channel input1
19	AUX_1L	GPIO48	AI/DIO	2/4/6/8/10/ 12/14/16mA		Linein left channel input1
20	AUX_0R	GPIO47	AI/DIO	2/4/6/8/10/ 12/14/16mA		Linein right channel input0
21	AUX_0L	GPIO46	AI/DIO	2/4/6/8/10/ 12/14/16mA		Linein left channel input0
22	AUX_2R	GPIO55	AI/DIO	2/4/6/8/10/ 12/14/16mA		Linein right channel input2
23	AUX_2L	GPIO54	AI/DIO	2/4/6/8/10/ 12/14/16mA		Linein left channel input2
24	MIC_NR	GPIO45 DMIC_DAT	AI/DIO	2/4/6/8/10/ 12/14/16mA		Microphone right channel input
25	MIC_NL	GPIO44 DMIC_CLK	AI/DIO	2/4/6/8/10/ 12/14/16mA		Microphone left channel input
26	AOUT_LN	GPIO51 I2STX_LRCLK I2SRX0_LRCLK I2SRX1_LRCLK PWM3	AO/DIO	2/4/6/8/10/ 12/14/16mA		Left channel differential output
27	AOUT_L	GPIO50	AO/DIO	2/4/6/8/10/ 12/14/16mA		Left channel output
28	AOUT_R	GPIO52	AO/DIO	2/4/6/8/10/ 12/14/16mA		Right channel output
29	AOUT_RN	GPIO53 I2STX_DOUT	AO/DIO	2/4/6/8/10/ 12/14/16mA		Right channel differential output

		I2SRX0_DIN I2SRX1_DIN PWM5				
30	AGND		GND			Analog Ground
31	GND		GND			GND
32	USB_DM		AIO			USB Data minus
33	USB_DP		AIO			USB Data plus
34	GPIO[17] /SD_CLK	SPI2_CLK LCD_SEG15 SPI1_CLK UART0_TX Timer3_cap	DIO	2/4/6/8/10/ 12/14/16mA	Z	Bit17 of General purpose I/O port
35	GPIO[20] /SD_DAT	SPI2_MISO LCD_D8 LCD_SEG10 SPI1_MISO PWM2 UART1_CTS Timer2_cap	DIO	2/4/6/8/10/ 12/14/16mA	Z	Bit20 of General purpose I/O port
36	GPIO[38] /I2S_DOU T	SPDIF_RX BT_REQ LCD_SEG28 PWM0 I2SRX0_DIN I2SRX1_DIN	DIO	2/4/6/8/10/ 12/14/16mA	PU	Bit38 of General purpose I/O port
37	GPIO[39] /I2S_BCLK	BT_ACCESS LCD_SEG29 PWM1 I2SRX0_BCLK I2SRX1_BCL K	DIO	2/4/6/8/10/ 12/14/16mA	PU	Bit39 of General purpose I/O port
38	GPIO[40] /I2S_MCL K	PTA_GRANT LCD_SEG30 PWM2 I2SRX0_MCLK I2SRX1_MCL K	DIO	2/4/6/8/10/ 12/14/16mA	PU	Bit40 of General purpose I/O port
39	GPIO[5] /PA_CTL2	LED_COM5 BT_REQ LCD_COM5 PWM3 Timer3_cap	DIO	2/4/6/8/10/ 12/14/16mA	Z	Bit5 of General purpose I/O port
40	GPIO[21] /PA_CTL1	SPI2_MOSI LCD_D9 LCD_SEG11 SPI1_MOSI PWM0 UART0_RX TEMPADC I2STX_MCLK I2SRX0_MCLK I2SRX1_MCLK Timer3_cap SD1_CLK UART1_TX SD0_DAT1	DIO	2/4/6/8/10/ 12/14/16mA	Z	Bit21 of General purpose I/O port

41	GPIO[6] /I2S_LRCLK	LED_COM6 BT_ACCESS LCD_SEG0 PWM4 I2SRX0_LRCLK I2SRX1_LRCLK Timer2_cap SD1_DAT0	DIO	2/4/6/8/10/ 12/14/16mA	Z	Bit6 of General purpose I/O port
42	GPIO[23] /SPDIF_TX	LCD_D11 LCD_SEG13 PWM2 UART0_TX LRADC3 I2STX_BCLK I2SRX0_BCLK I2SRX1_BCLK Timer3_cap SD1_CMD SD0_DAT3 SD0_DAT0	DIO	2/4/6/8/10/ 12/14/16mA	Z	Bit23 of General purpose I/O
43	GPIO[22] /LRADC2	LCD_D10 LCD_SEG12 IR_RX PWM1 UART0_TX I2STX_LRCLK I2SRX0_LRCLK I2SRX1_LRCLK Timer2_cap SD1_DAT2 UART1_RX SD0_DAT2	DIO	2/4/6/8/10/ 12/14/16mA	Z	Bit22 of General purpose I/O port
44	GPIO[15]	LED_SEG7 LCD_D7 LCD_SEG9 SPI1_IO3 PWM4 UART1_RX I2STX_MCLK I2SRX0_MCLK I2SRX1_MCLK Timer3_cap SD1_DAT0	DIO	2/4/6/8/10/ 12/14/16mA	Z	Bit15 of General purpose I/O port
45	GPIO[14]	LED_SEG6 LCD_D6 LCD_SEG8 SPI1_IO2 LRADC11 Timer2_cap	DIO	2/4/6/8/10/ 12/14/16mA	Z	Bit14 of General purpose I/O port
46	GPIO[13]	LED_SEG5 LCD_D5 LCD_SEG7 SPI1_IO3 PWM8 UART1_RTS LRADC10 Timer3_cap SD1_DAT3	DIO	2/4/6/8/10/ 12/14/16mA	Z	Bit13 of General purpose I/O port

47	GPIO[9]	LED_SEG1 LCD_D1 LCD_SEG3 SPI1_CLK PWM4 LRADC6 SPI2_CLK Timer3_cap SD1_CMD	DIO	2/4/6/8/10/ 12/14/16mA	Z	Bit9 of General purpose I/O port
48	GPIO[8]	LED_SEG0 LCD_D0 LCD_SEG2 SPI1_SS PWM3 LRADC5 SPI2_SS Timer2_cap SD1_CLK	DIO	2/4/6/8/10/ 12/14/16mA	Z	Bit8 of General purpose I/O port
49	GPIO[10]	LED_SEG2 LCD_D2 LCD_SEG4 SPI1_MISO PWM5 UART0_CTS LRADC7SPI2 _MISO Timer2_cap SD1_DAT0	DIO	2/4/6/8/10/ 12/14/16mA	Z	Bit10 of General purpose I/O port
50	GPIO[12]	LED_SEG4 LCD_D4 LCD_SEG6 SPI1_IO2 PWM7 LRADC9 Timer2_cap SD1_DAT2	DIO	2/4/6/8/10/ 12/14/16mA	Z	Bit12 of General purpose I/O port
51	GPIO[11]	LED_SEG3 LCD_D3 LCD_SEG5 SPI1_MOSI PWM6 UART0_RTS LRADC8 SPI2_MOSI Timer3_cap SD1_DAT1	DIO	2/4/6/8/10/ 12/14/16mA	Z	Bit11 of General purpose I/O port
52	GPIO[16] /SD_CMD	SPI2_SS LCD_SEG14 SPI1_SS PWM4 UART0_RX Timer2_cap	DIO	2/4/6/8/10/ 12/14/16mA	Z	Bit16 of General purpose I/O port
53	GPIO[32]	LCD_SEG22 I2STX_MCLK I2SRX0_MCL K I2SRX1_MCL K	DIO	2/4/6/8/10/ 12/14/16mA	PU	Bit32 of General purpose I/O port
54	GPIO[33]	LCD_SEG23	DIO	2/4/6/8/10/	PU	Bit33 of General purpose I/O

		I2STX_BCLK I2SRX0_BCLK I2SRX1_BCL K		12/14/16mA		port
55	GPIO[34]	LCD_SEG24 I2STX_LRCLK I2SRX0_LRCLK I2SRX1_LRCL K	DIO	2/4/6/8/10/ 12/14/16mA	PU	Bit34 of General purpose I/O port
56	GPIO[35]	SPDIF_TX LCD_SEG25 I2STX_DOUT I2SRX0_DIN I2SRX1_DIN	DIO	2/4/6/8/10/ 12/14/16mA	Z	Bit35 of General purpose I/O port
57	GPIO[42] /IR_RX	I2C_SCL PWM3 PWM5 I2STX_BCLK I2SRX0_BCLK I2SRX1_BCLK SD0_CLK0 IR_RX UART1_TX SD1_DAT1	DIO	2/4/6/8/10/ 12/14/16mA	Z	Bit42 of General purpose I/O port

Note:
(1) Boot from SPI Nor Flash;
(2) PU: Pull up through 10K resistor;
(3) Z: High resistance;
(4) V: Variable state;
(5) L: Low level.

1.6 Module Dimension

F1DA2835P_Rev1.1_Dimension

1. Top View (Unit : mm)

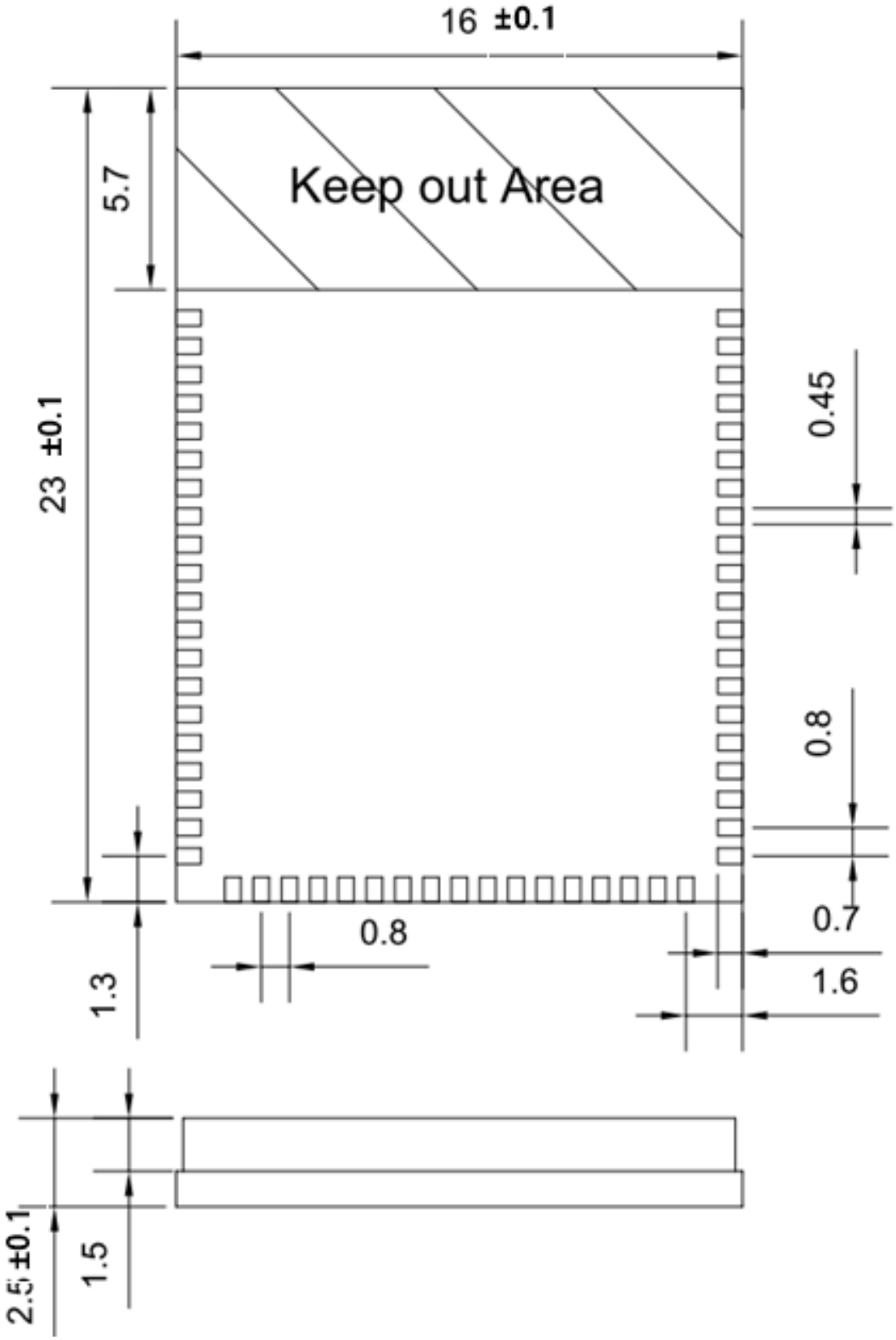

2. Characteristics

2.1.1 Electrical Characteristics

Absolute Maximum Ratings				
Parameter	Symbol	Min	Max	Unit
Ambient Temperature	Tamb	-30	+80	°C
Storage temperature	Tstg	-55	+150	°C
ESD Stress voltage	Vesd (Human body model)	4000	-	V
Supply Voltage	DC5V	-0.3	9	V
	BAT	-0.3	5	V
	VCC/SVCC/AVCC	-0.3	3.6	V
	VDD	-0.3	1.32	V
Input Voltage	3.3V IO	-0.3	3.6	V
	1.2V IO	-0.3	1.32	V

Recommended PWR Supply				
Supply Voltage	Min	Typ	Max	Unit
BAT (Li)	3.4	3.8	4.5	V
DC5V	4.5	5.0	7.0	V
VCC/SVCC/AVCC	2.8	3.1	3.4	V
VDD/RTCVDD	1.08	1.2	1.32	V
VREF	--	1.5	--	V
ONOFF	--	--	1.32	V

DC Parameters for +3.3V IO Pin with Schmitt Trigger Off					
Parameter	Symbol	Min.	Max.	Unit	Condition
Low-level input voltage	VIL	-	0.8	V	VCC = 3.1V Tamb = -10 to 70 °C
High-level input voltage	VIH	2.0	-	V	
Low-level output voltage	VOL	-	0.4	V	
High-level output voltage	VOH	2.4	-	V	

DC Parameter for +3.3V IO Pin with Schmitt Trigger On					
Parameter	Symbol	Min.	Max.	Unit	Condition
Schmitt trigger positive-going threshold	VT+	-	1.9	V	VCC=3.1V Tamb = -10 to 70 °C
Schmitt trigger negative-going threshold	VT-	1.2	-	V	

2.1.2 Power consumption

VDD = 1.2V @ 25°C unless otherwise specified

Parameter	Symbol	Condition	Min.	Typ.	Max.	Unit
A2DP	Ct	SBC	-	13.5	-	mA
HFP	Cr	mSBC	-	16.5	-	mA
Sniff Mode	Cs	500ms	-	450	500	µA
Standby	Cd	Vbat = 3.8V， with RTC	35	-	50	µA

2.2 RF Characteristics

2.2.1 BR(Conducted)

Transmitter

Parameter	Condition	Min.	Typ.	Max.	Unit
Maximum RF Transmit PWR	-	-	6	7	dBm
RF PWR Control Step	-	2	4	8	dB
20dB Bandwidth for Modulated Carrier	-	-	914		KHz
Adjacent Channel Transmit	+2 MHz	-		-20	dBm
	-2 MHz	-		-20	dBm
	+3 MHz	-		-40	dBm
	-3 MHz	-		-40	dBm
Frequency Deviation	Δf1avg Maximum Modulation	140	166	175	KHz
	Δf2max Maximum Modulation	115	130		KHz
	Δf1avg/Δf2avg	0.8	1		
Initial Carrier Frequency Tolerance	-	-75	±10	75	KHz
Frequency Drift	DH1 Packet	-25	±10	25	KHz
	DH3 Packet	-40	±10	40	KHz
	DH5 Packet	-40	±10	40	KHz
Frequency Drift Rate	-	-20	3	20	KHz/50us

Receiver

Description		Min.	Typ.	Max.	Unit
Sensitivity			-91		dBm
Maximum Input PWR at 0.1% BER		-20			dBm
Co-Channel Interface		-		11	dB
Adjacent Channel Selectivity C/I	$F = F_0 + 1MHz$	-		0	dB
	$F = F_0 - 1MHz$	-		0	dB
	$F = F_0 + 2MHz$	-		-30	dB
	$F = F_0 - 2MHz$	-		-30	dB
	$F = F_0 + 3MHz$	-		-40	dB
	$F = F_{image}$	-		-9	dB

2.2.2 EDR(Conducted)

Transmitter

Description		Min	Typ.	Max.	Unit
Relative Transmit PWR(EDR)		-	3	4	dB
π/4 DQPSK max carrier frequency stability|ω_0|		-10	±3	10	KHz
π/4 DQPSK max carrier frequency stability|ω_i|		-75	±5	75	KHz
π/4 DQPSK max carrier frequency stability|$\omega_0+\omega_i$|		-75	±4	75	KHz
8DPSK max carrier frequency stability |ω_0|		-10	±3	10	KHz
8DPSK max carrier frequency stability |ω_i|		-75	±5	75	KHz
8DPSK max carrier frequency stability|$\omega_0+\omega_i$|		-75	±5	75	KHz
π/4 DQPSK Modulation Accuracy	RMS DEVM			20	%
	99% DEVM	99	100		%
	Peak DEVM			35	%
In-band spurious emissions	F >F0 + 3MHz			-40	dBm
	F < F0 - 3MHz			-40	dBm
	F = F0 + 3MHz			-40	dBm
	F = F0 - 3MHz			-40	dBm
	F = F0 + 2MHz			-20	dBm
	F = F0 - 2MHz			-20	dBm
	F = F0 + 1MHz			-26	dBm
	F = F0 - 1MHz			-26	dBm
EDR Differential Phase Encoding		99	100		%

Receiver

Description		Min.	Typ.	Max.	Unit
Sensitivity at 0.1% BER	π/4 DQPSK		-90	-	dBm
	8DPSK		-85	-	dBm
Maximum Input PWR at 0.1% BER	π/4 DQPSK	-20			dBm
	8DPSK	-20			dB
C0-Channel Interference	π/4 DQPSK	-		13	dB
	8DPSK	-		21	dB

2.2.3 LE 1M(Conducted)

Transmitter

Description		Min.	Typ.	Max.	Unit
Maximum RF Transmit PWR			3.5	4.5	dBm
In-band emissions	+2 MHz		-45	-20	dBm
	-2 MHz		-45	-20	dBm
	+3 MHz		-43	-30	dBm
	-3 MHz		-43	-30	dBm
Modulation Characteristics	Δf1avg Maximum Modulation	225	252	275	KHz
	Δf2max Maximum Modulation	185	232		KHz
	Δf1avg/Δf2avg	0.8	0.95		
Carrier Frequency Offset		-150	<+/-10	150	KHz
Frequency Drift		-50	<+/-10	50	KHz

Receiver

Description		Min.	Typ.	Max.	Specification
Sensitivity LE 1M (dBm)			-95		<-70
Maximum Input PWR at 0.1% BER		-10	-2		-10
C/I (dB)	Co-channel		17		<21dB
	Adjacent 1Mhz		20		<15dB
	Adjacent 2MHz		23/26		<-17dB
	Adjacent >=3Mhz		21		<-27dB
	Image interference		27		<-9dB
	Image+/-1Mhz		21		<-15dB
Blocking(dBm)	30Mhz~2000Mhz	-30			-30
	2000Mhz~2400MHz	-35			-35
	2500MHz~3000MHz	-35			-35
	3000MHz~12.75Ghz	-30			-30
Inter-Modulation	Payload length: 37, n: 3, Packets: 1500 RF Level: -64 dBm		-30		PER≦30.8% ≧-50
	Payload length: 37, n: 4 Packets: 1500 RF Level: -64 dBm		-30		PER≦30.8% ≧-50
	Payload length: 37, n: 5 Packets: 1500 RF Level: -64 dBm		-30		PER≦30.8% ≧-50

2.2.4 LE 2M(Conducted)

Transmitter

Description		Min.	Typ.	Max.	Unit
Maximum RF Transmit PWR			3.5	4.5	dBm
Adjacent Channel Transmit	+2 MHz		-53	-20	dBm
	-2 MHz		-53	-20	dBm
	+3 MHz		-56	-30	dBm
	-3 MHz		-56	-30	dBm
Frequency Deviation	Δf1avg Maximum Modulation	450	495	550	KHz
	Δf2max Maximum Modulation	370	442		KHz
	Δf1avg/Δf2avg	0.8	0.92		
Carrier Frequency Offset		-150	<+/-10	150	KHz
Frequency Drift		-50	<+/-10	50	KHz
Frequency Drift Rate		-20	<+/-5	20	KHz/50us

Receiver

Description		Min.	Typ.	Max.	Specification
Sensitivity LE 2M(dBm)			-92		<-70
Maximum Input PWR at 0.1% BER		-10	-8		-10
C/I (dB)	Co-channel		14		<21dB
	Adjacent 2Mhz		22		<15dB
	Adjacent 4MHz		16/20		<-17dB
	Adjacent >=6Mhz		13		<-27dB
	Image interference		24		<-9dB
	Image+/-2Mhz		22		<-15dB
Blocking(dBm)	30Mhz~2000Mhz	-30			-30
	2000Mhz~2400MHz	-35			-35
	2500MHz~3000MHz	-35			-35
	3000MHz~12.75Ghz	-30			-30
Inter-Modulation	Payload length: 37, n: 3, Packets: 1500 RF Level: -64 dBm		-30		PER≦30.8% ≧-50
	Payload length: 37, n: 4 Packets: 1500 RF Level: -64 dBm		-30		PER≦30.8% ≧-50
	Payload length: 37, n: 5 Packets: 1500		-30		PER≦30.8% ≧-50

2.3 Audio Characteristics

2.3.1 Audio ADC

Pre-Amplifier						
Parameter	**Conditions**		**Min**	**Typ**	**Max**	**Unit**
Full Scale Input Voltage	THD+N < 1%		-	-	2.8	Vpp
Analogue gain	AUX OP	-	-12	-	7.5	dB
	MIC OP	Single Ended	26	-	39	dB
		Full Differential	32	-	45	
Analogue to Digital Converter						
Resolution	-		-	-	20	Bits
Input Sample Rate	-		8	-	96	kHz
SNR	fin = 1kHz@Full Scale InputVoltage B/W = 22Hz~22kHz Fs=48kHz		-	96	-	dB
Dynamic Range	fin = 1kHz@-40dBFS Input Voltage B/W = 22Hz~22kHz Fs=48kHz		-	94	-	dB
THD+N	fin = 1kHz(input=1.6Vpp) B/W= 22Hz~22kHz Fs=48kHz		-	-85	-	dB
Digital gain	-		0	-	45	dB

2.3.2 Stereo DAC

Digital to Analogue Converter						
Parameter	**Conditions**		**Min**	**Typ**	**Max**	**Unit**
Resolution	-		-	-	20	Bits
Output Sample Rate	-		8	-	96	kHz
SNR	fin = 1kHz@0dBFS input B/W = 22Hz~22kHz Fs=48kHz,Load=16Ω	-	-	98	-	dB
		A-Weighting	-	101	-	dBA
Dynamic Range	fin = 1kHz@-48dBFS input B/W = 22Hz~22kHz Fs=48kHz,Load=16Ω	-	-	98	-	dB
		A-Weighting	-	101	-	dBA
THD+N	fin = 1kHz@0dBFS input B/W = 22Hz~22kHz Fs=48kHz,Load=16Ω	-	-	-87	-	dB
Digital gain	-		<-98	-	24	dB
Stereo crosstalk	fin = 1kHz@0dBFS input	-	-	-78	-	dB
PWR Amplifier						
Analogue gain	-		-98	-	0	dB
Max	fin = 1kHz@0dBFS input	Single Ended	-	-	536	mVrms
Amplitude/PWR	Fs=48kHz,Load=16Ω	Output	-	-	18	mW
	fin = 1kHz@0dBFS input Fs=48kHz,Load=16Ω	Direct drive Output	-	-	536	mVrms
					18	mW
	fin = 1kHz@0dBFS input Fs=48kHz,Load=10KΩ	Full Differential Output	-	-	1.82	Vrms

3. Interface

3.1 USB

• Complies with the USB2.0 Specification Revision 1.0a.
• UTMI+ level2 Transceiver Macrocell Interface.
• Supports point-to-point communication with one full-speed or high-speed device in Host mode (no HUB support).
• Supports full-speed or high-speed in peripheral mode.
• Supports 3 IN endpoint and 3 OUT endpoint except endpoint0.
• Supports bulk Isochronous and Interrupt transfer.
• Partially configurable endpoint endpoint type and single, double triple or quad buffering.
• Integrated synchronous RAM as endpoint FIFOs.
• Supports suspend, resume and power managements function.
• Support remote wakeup for device mode.
• Support DMA transfer for endpoint in1 and out2

3.2 I2C

• Both master and slave functions supported
• Support standard mode (100kbps) and fast-speed mode (400kpbs)
• Only 7-bit address mode support
• 8 bit x16 TX FIFO and 8bit x16 RX FIFO
• Supports general call
• Pull-up resistors are required on both of the I2C signal lines as the I2C drivers are open drain. Typically external 2.2k-Ohm resisters are used to pull the signals up to VCC if not select internal Pull-Up resistor.

I2C	GPIO	
I2C_SCL	GPIO0	GPIO42
I2C_SDA	GPIO1	GPIO19

3.3 UART0 and UART1

F1DA2835P contains two UART interfaces (UART0 and UART1)

• 5-8 Data Bits and LSB first in Transmit and Received
• 1-2 Stop Bits
• Even, Odd, or No Parity
• 16 Byte Transmit and Receive FIFOs
• Capable of speeds up to 6Mbps to enable connections with Bluetooth and other peripherals
• Support IRQ and DMA mode to transmit data
• Support RTS/CTS Automatic Hardware Flow Control to reduce interrupts to host system
• UART RX Support DMA single mode
• Add UART RX DMA counter for valid data in RAM。

• RX Baud Rate tolerance≤±2%
• UART0 TXFIFO can be accessed by CPU and DSP

UART0	GPIO			
RTS	GPIO0	GPIO11		
CTS	GPIO1	GPIO10		
RX	GPIO2	GPIO16	GPIO21	
TX	GPIO3	GPIO22	GPIO17	GPIO23

UART1	GPIO		
RTS	GPIO13		
CTS	GPIO20		
RX	GPIO15	GPIO22	
TX	GPIO7	GPIO21	GPIO42

3.4 SPI

3.4.1 SPI1

The SPI module is designed according to Motorola serial peripheral interface protocols. It can be configured as either a master or slave device. It can generate a large range of SPI clock so as to communicate with different devices supporting SPI protocols. Especially, this module support three operation mode: write &read, write only, read only mode.
SPI write & read mode use the MOSI pin to serially write instructions, addresses or data to the device. It also uses the MISO pin to read data or status from the device synchronous. This mode is designed to meet normal SPI application.

• Support SPI normal mode: mode 0/1/2/3
• Only support normal 4 wire mode
• Support IRQ and DMA mode to transmit data
• Support D-cache Interface
• Support 16 level delay chain, 1ns/step
• Support 1x/2x/dual/4x/quad access SPI NOR
• Support slave mode
• Support 100MHz spi_clk as highest speed

SPI	GPIO		
SPI1_SS	GPIO8	GPIO16	
SPI1_CLK	GPIO9	GPIO17	GPIO3
SPI1_MISO	GPIO10	GPIO20	
SPI1_MOSI	GPIO11	GPIO21	GPIO2
SPI1_I2	GPIO12	GPIO14	
SPI1_I3	GPIO13	GPIO15	

3.4.2 SPI2

- Support SPI normal mode: mode 0/1/2/3
- Only support normal 4 wire mode
- Support IRQ and DMA mode to transmit data
- Support 16 level delay chain, 1ns/step
- Support slave mode
- Support 100MHz spi clk as highest speed

SPI	GPIO		
SPI2_SS	GPIO8	GPIO16	GPIO0
SPI2_CLK	GPIO9	GPIO17	GPIO3
SPI2_MISO	GPIO10	GPIO20	GPIO1
SPI2_MOSI	GPIO11	GPIO21	GPIO2

3.5 PWM

• Independent of 9 PWM
• The frequency of PWM comes from the division of 32KHz
• Support normal mode and breath mode
  - Normal mode can output 256 kinds of duty
  - Breath mode supports breathing lights with various flicker frequencies

PWM	GPIO				
PWM0	GPIO7	GPIO38	GPIO21		
PWM1	GPIO0	GPIO4	GPIO22		
PWM2	GPIO23	GPIO2	GPIO20	GPIO40	
PWM3	GPIO8	GPIO42	GPIO1	GPIO51	GPIO5
PWM4	GPIO16	GPIO9			
PWM5	GPIO10	GPIO42	GPIO53		
PWM6	GPIO11				
PWM7	GPIO12				
PWM8	GPIO13				

3.5.1 Normal Mode Timing

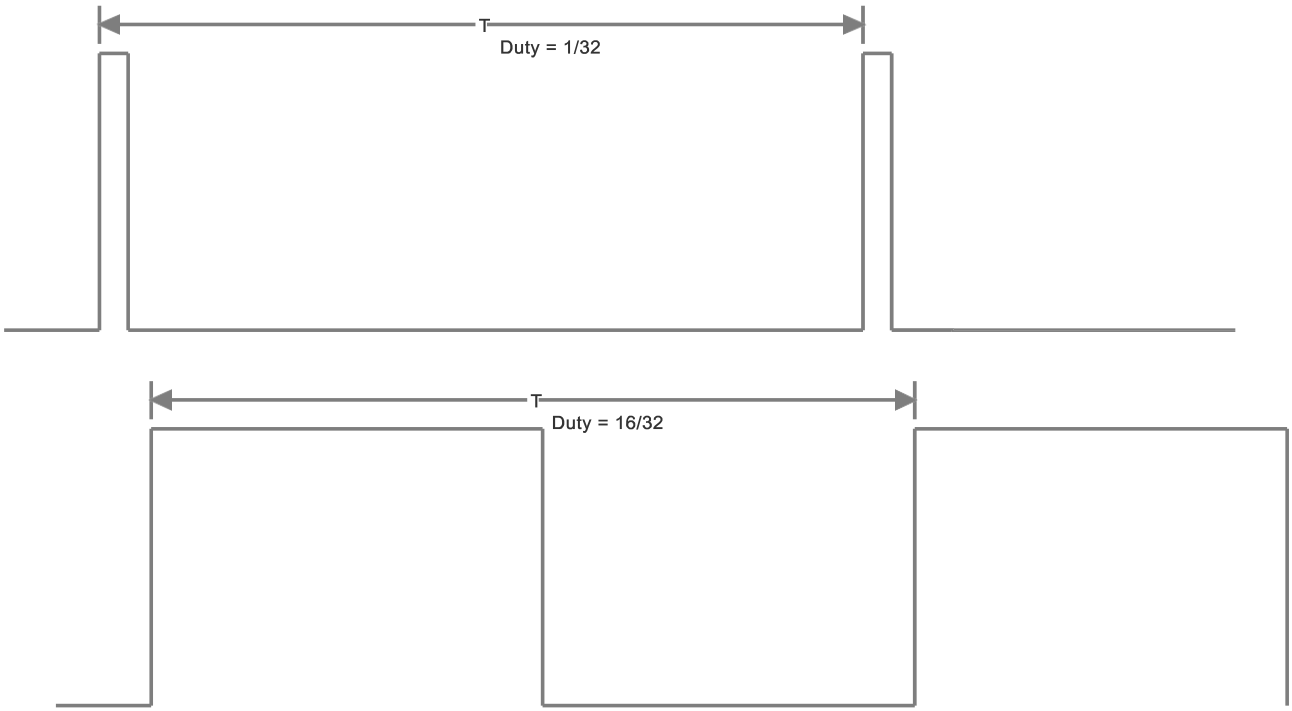

PWM can be used as backlights enable signal of LCD. The brightness of the backlights is decided by the duty cycle of

3.5.2 Breath Mode Timing

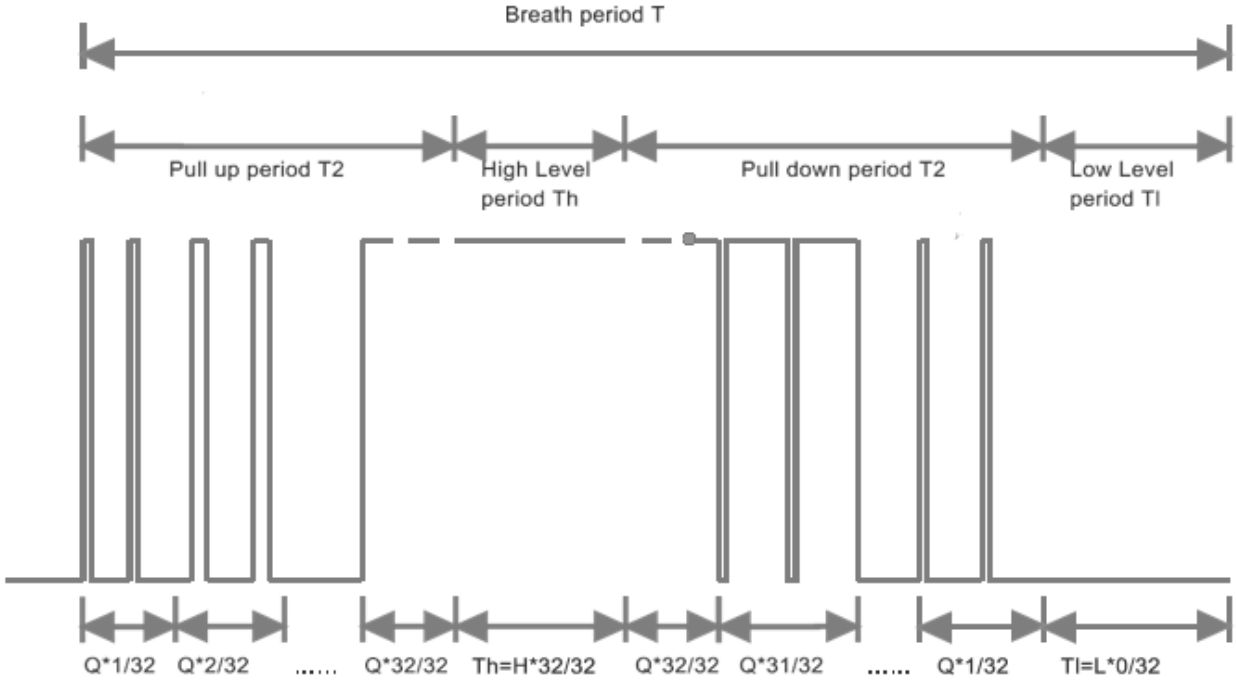

The breath mode of PWM can be used for driver of breathing light. For example, if PWM CLK from CMU is f=1/t and we need the time of pull up or pull down to be T2=Q*32*32t=0.5s, and the time of high level Th=H*32T=0.5s and the time of low level Tl=L*32t=2s, when we set Q=2, the f should be 4096 and H is 64, L is 256.

3.6 Audio Interfaces

3.6.1 DAC

- Build in stereo 24 bit input sigma-delta DAC, SNR>98dB, SNR (A-WEIGHTING)>101dB, THD<-87dB
- DAC supports sample rate 8k/12k/11.025k/16k/22.05k/24k/32k/44.1/48/96kHz
- Support digital volume of 256 steps with zero cross detection
- Build in stereo 20mW PA (Power Amplifier) for headphone. PA output supports traditional mode and direct drive mode(for earphone)
- An anti-pop circuit for suppressing noise of PA when enable and disable
- Support differential audio output for speaker PA

3.6.2 ADC

- Build in stereo 24 bit input sigma-delta ADCs, SNR>96dB, SNR (A-WEIGHTING)>98dB, THD<-85dB
- ADC supports sample rate 8k/12k/11.025k/16k/22.05k/24k/32k/44.1/48/96kHz
- A digital high-pass filter can be used to remove dc offsets when ADC use

• Supports single-ended input analog microphones and full difference input microphone
• Supports Digital microphones

3.6.3 I2S

• F1DA2835P supports 3 groups of I2S, two of which are receivers (I2SRX0 and I2SRX1), and one is transmitter (I2STX).
• I2SRX0 and I2SRX1 support I2S receiver(RX) with master mode and slave mode
• I2STX support I2S transmission(TX) with master mode and slave mode
• I2S support sample rate 8k/12k/11.025k/16k/22.05k/24k/32k/44.1k/48k/96k/192kHz

I2S	GPIO				
I2STX_MCLK	GPIO0	GPIO15	GPIO21	GPIO32	GPIO40
I2STX_BCLK	GPIO1	GPIO23	GPIO33	GPIO39	GPIO42
I2STX_LRCLK	GPIO2	GPIO6	GPIO22	GPIO34	GPIO51
I2STX_DOUT	GPIO3	GPIO7	GPIO35	GPIO38	GPIO53
I2SRX0_MCLK	GPIO0	GPIO15	GPIO21	GPIO32	GPIO40
I2SRX0_BLCK	GPIO1	GPIO23	GPIO33	GPIO39	GPIO42
I2SRX0_LRCLK	GPIO2	GPIO6	GPIO22	GPIO34	GPIO51
I2SRX0_DIN	GPIO3	GPIO7	GPIO35	GPIO38	GPIO53
I2SRX1_MCLK	GPIO0	GPIO15	GPIO21	GPIO32	GPIO40
I2SRX1_BCLK	GPIO1	GPIO23	GPIO33	GPIO39	GPIO42
I2SRX1_LRCLK	GPIO2	GPIO6	GPIO22	GPIO34	GPIO51
I2SRX1_DIN	GPIO3	GPIO7	GPIO35	GPIO38	GPIO53

3.6.4 SPDIF

F1DA2835P supports SPDIF TX and RX.
The SPDIF of F1DA2835P supports sampling rate: 192k/96k/48k/44.1k/32kHz

SPDIF	GPIO	
SPDIF_TX	GPIO35	GPIO23
SPDIF_RX	GPIO7	GPIO38

4. Application Schematic

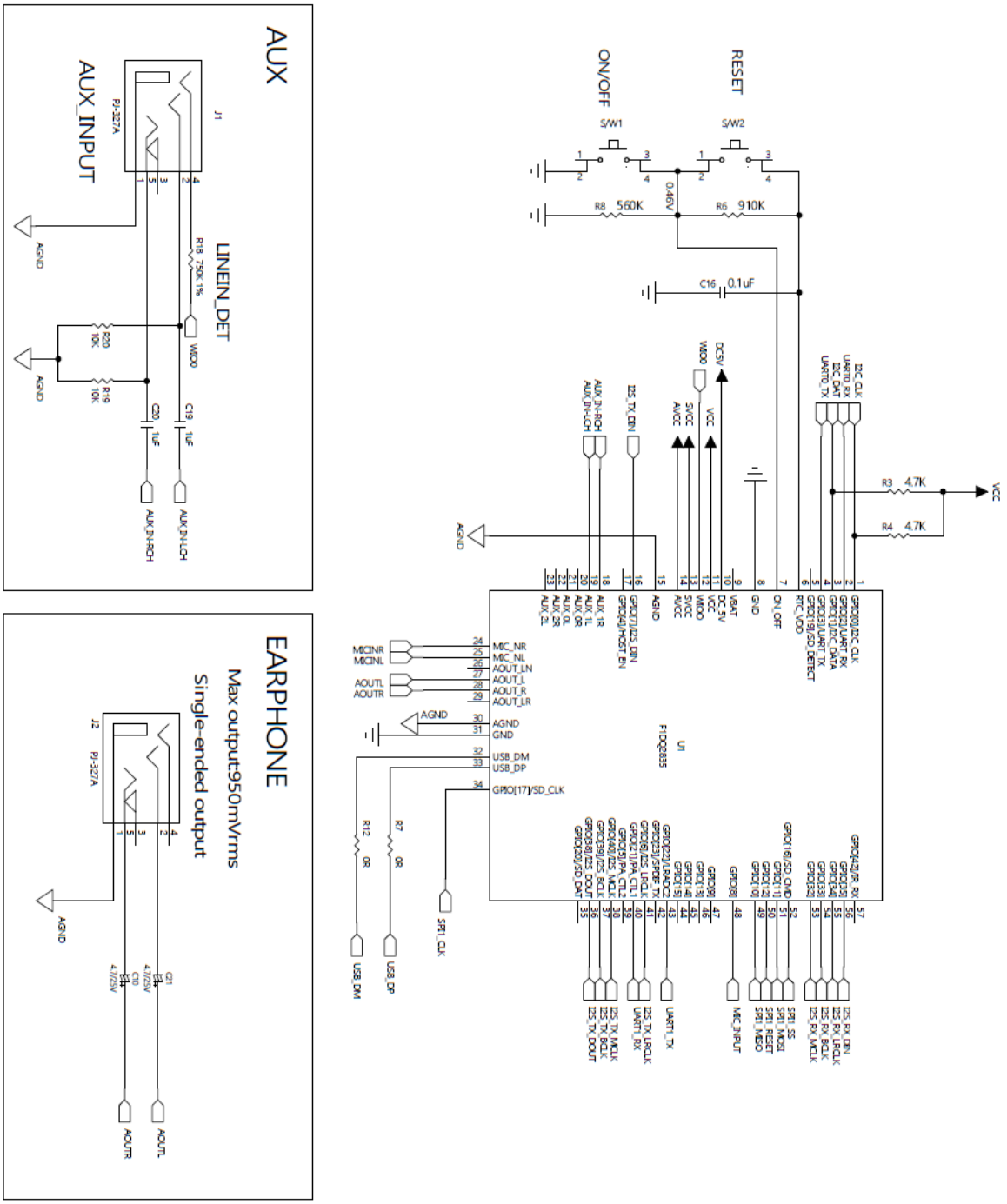

5. Antenna spec

5.1 Passive measurement data

Return Loss

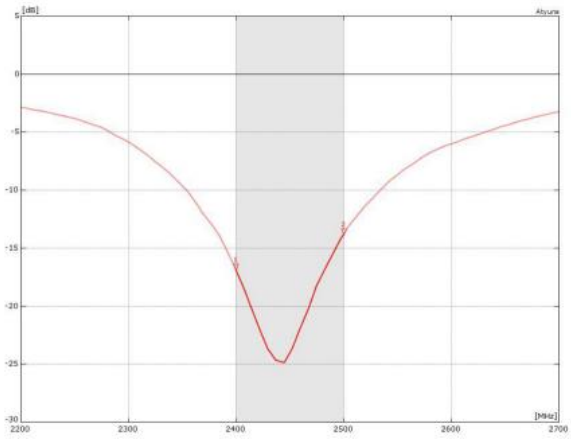

VSWR

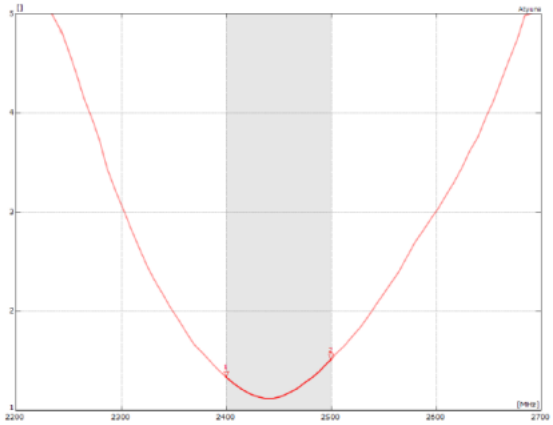

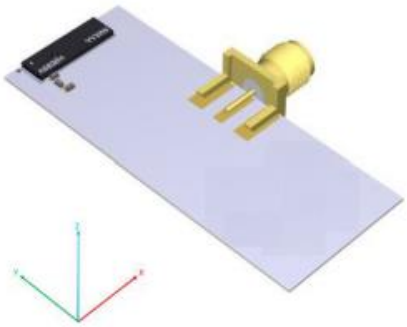

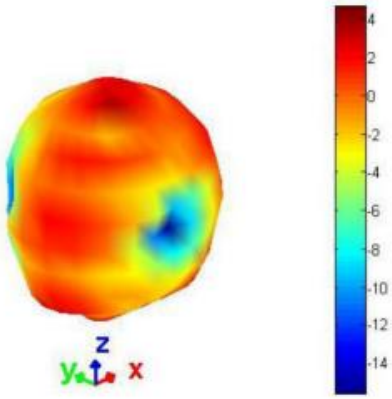

XY

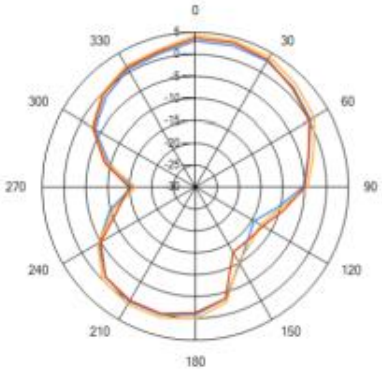

XZ

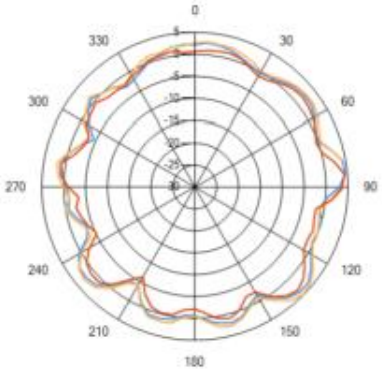

YZ

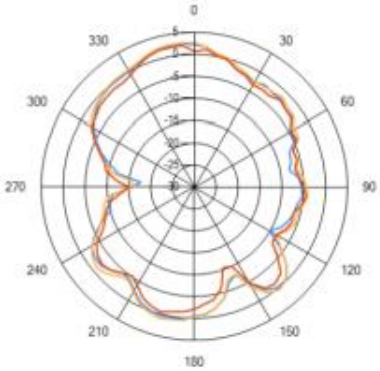

2.4GHz 2.45GHz 2.5GHz

5.2 Active measurement data(T.B.D)

6. Module Placement Rule

On the main PCB, the areas under the antenna should not contain any top, inner layer, or bottom copper as shown in Figure. For the best range performance, keep all external metal away from the chip antenna at least 45 mm. In all cases, the performance of the antenna can vary depending on GND.

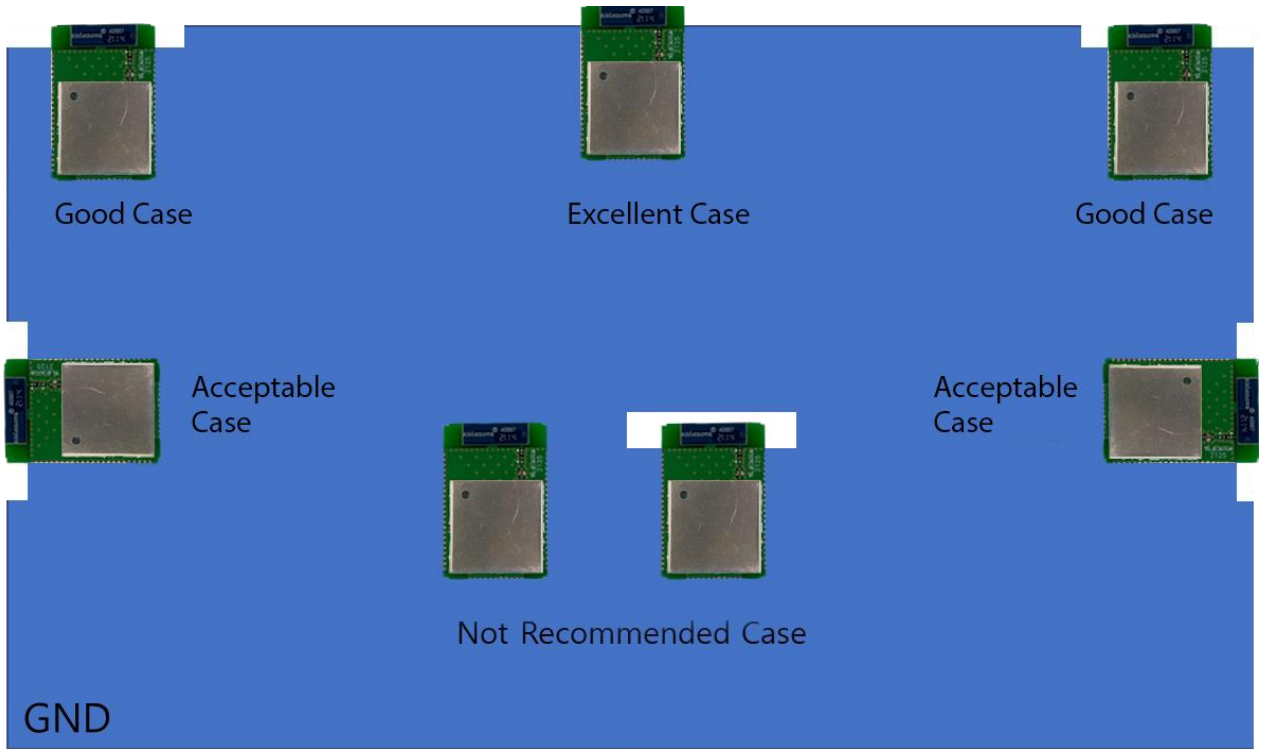

7 . PCB Layout

F1DA2835P_Rev1.1_Layout

1. Top View (Unit : mm)

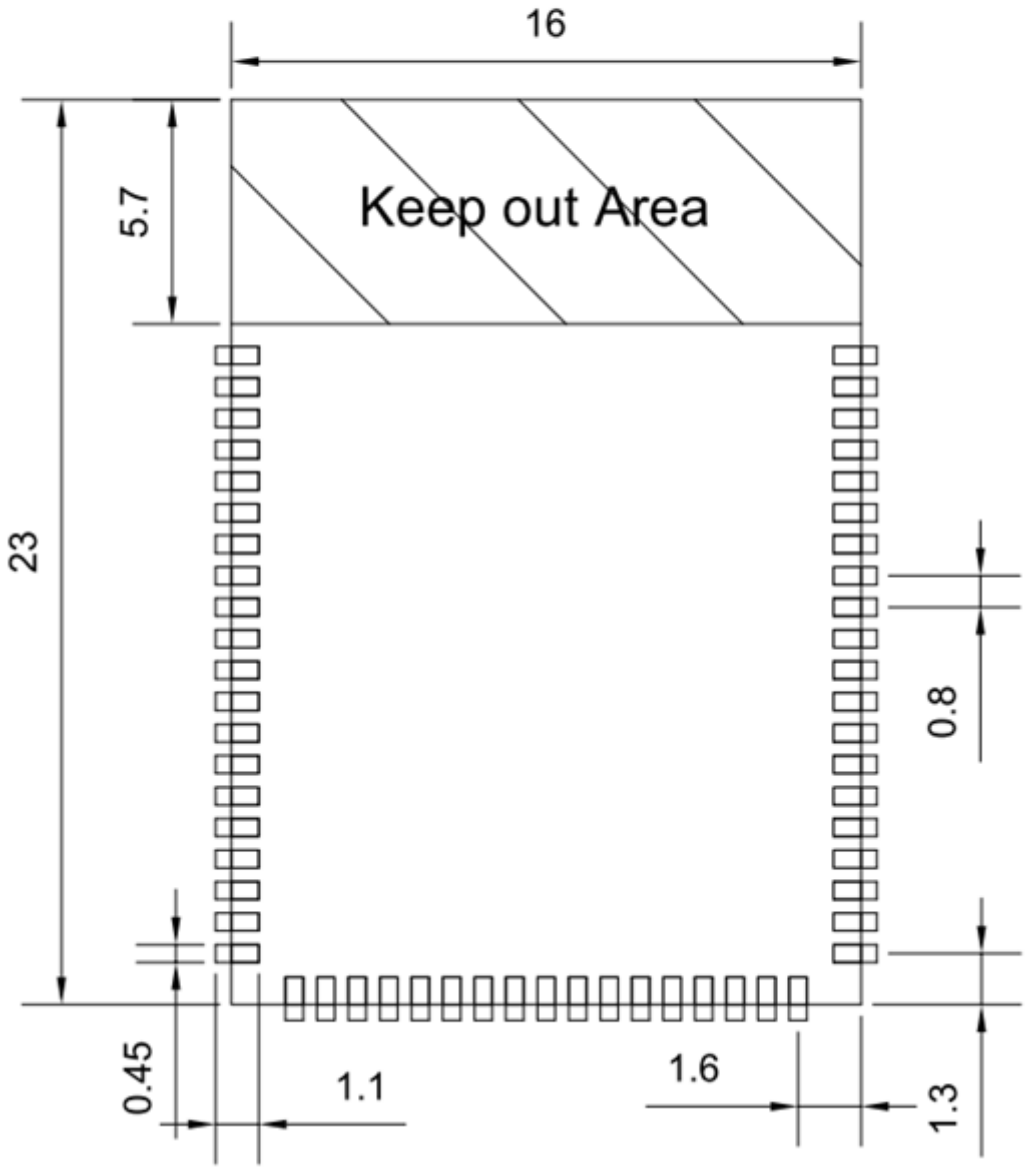

8. Reflow Temperature Profile

The F1DA2835P is constructed with all RoHS compliant material and should be reflowed accordingly. This Module is Moisture Sensitivity Level MSL4 and must be stored and handled accordingly.

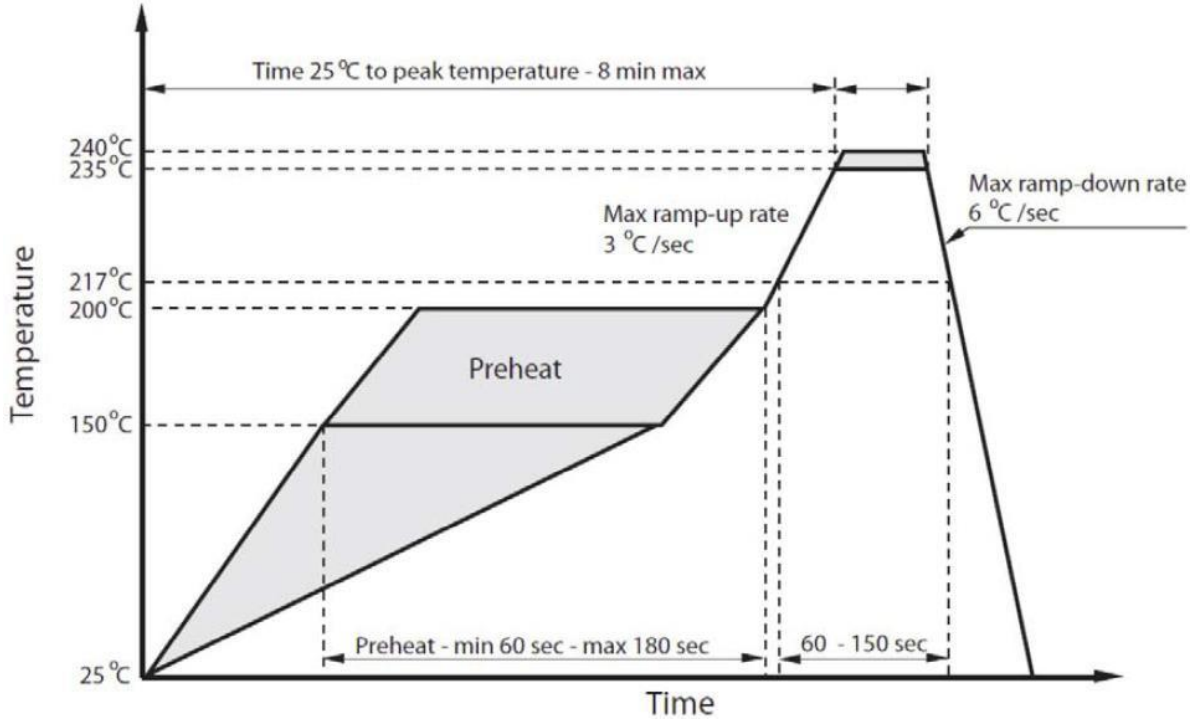

Figure 8-1 Typical Reflow Solder Profile

9. Packing information

a. Reel(Robbin)

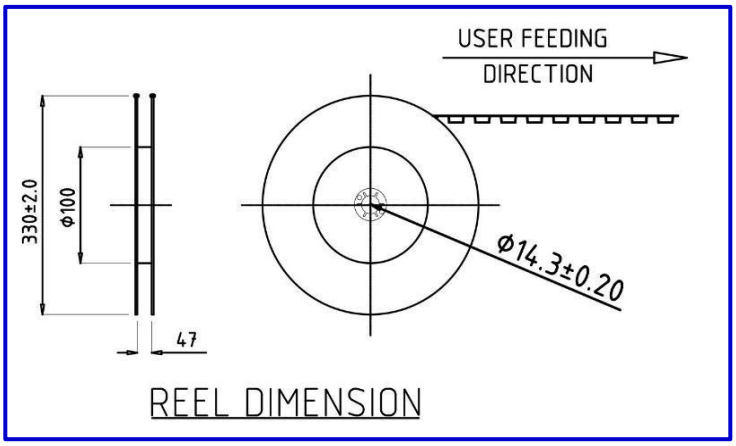

b. Carrier Tape(Robbin)

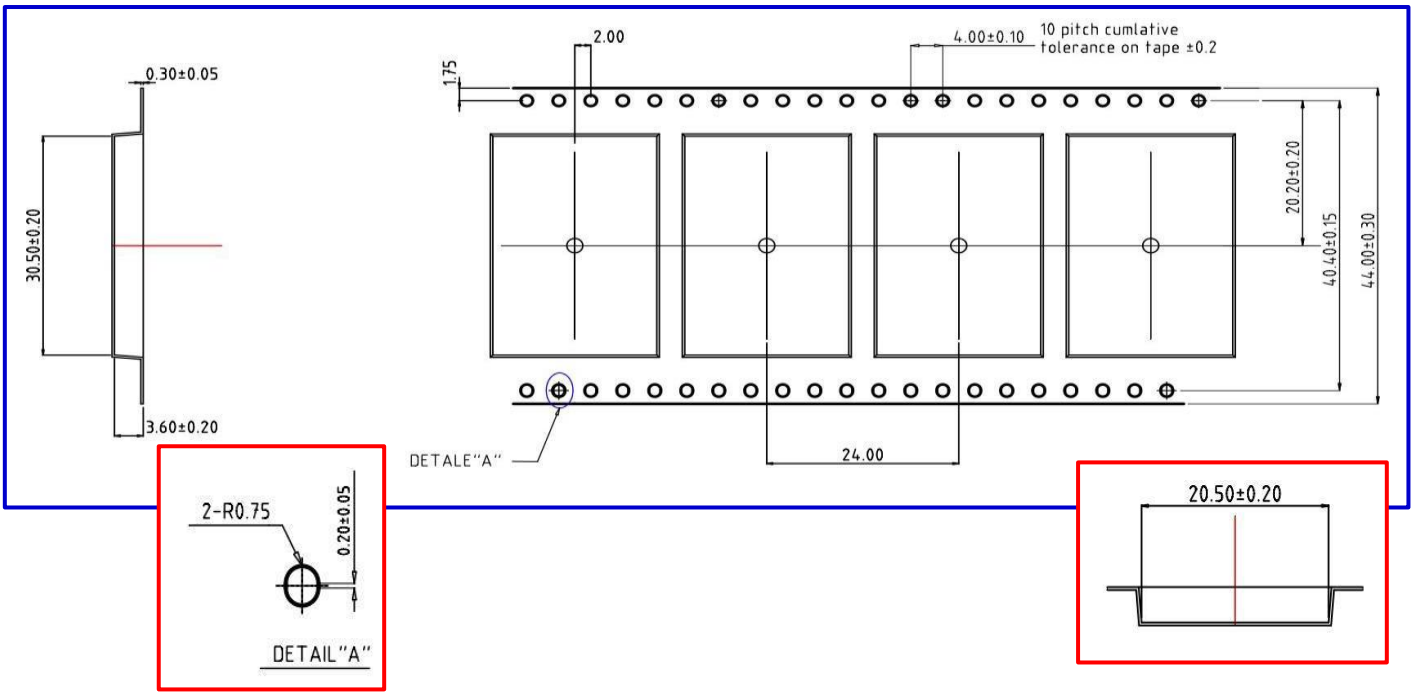

c. Gift Box Packing

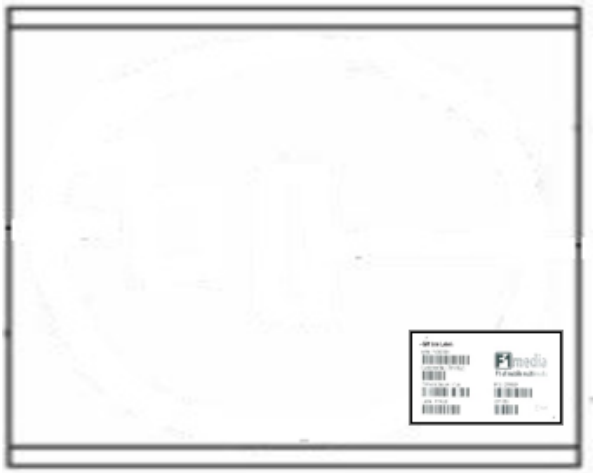

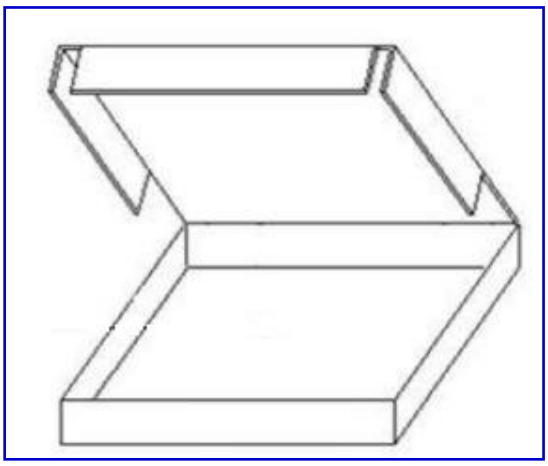

Gift BOX Size (단위; mm)				
구분				QTY(ea)
#0	340	360	54	700

d. Carton Box Packing

Carton BOX Size (단위; cm)					
구분				Gift BOX수량	QTY(ea)
#1	37.5	38	63	10	7,000
#2	36	33.5	39	5	3,500

10. Revision History

Revision	Date	Change Descriptions	Issued by
Rev 1.0	2023-05-17	Initial release	T. G. KIM
Rev 1.1	2023-05-25	Changed antenna spec	T. G. KIM
Rev 1.2	2023-09-15	Changed RF Characteristics spec	T. G. KIM
Rev 1.3	2023-09-25	Changed Electrical Characteristics	T. G. KIM

FCC Statement

FCC Part 15C 15.247, 15E 15.407 is applied to the modular transmitter.

Federal Communication Commission Interference Statement
This equipment has been tested and found to comply with the limits for a Class B digital device, pursuant to Part 15 of the FCC Rules. These limits are designed to provide reasonable protection against harmful interference in a residential installation. This equipment generates, uses and can radiate radio frequency energy and, if not installed and used in accordance with the instructions, may cause harmful interference to radio communications. However, there is no guarantee that interference will not occur in a particular installation. If this equipment does cause harmful interference to radio or television reception, which can be determined by turning the equipment off and on, the user is encouraged to try to correct the interference by one of the following measures:

- Reorient or relocate the receiving antenna.
- Increase the separation between the equipment and receiver.
- Connect the equipment into an outlet on a circuit different from that to which the receiver is connected.
- Consult the dealer or an experienced radio/TV technician for help.

This device complies with Part 15 of the FCC Rules. Operation is subject to the following two conditions: (1) This device may not cause harmful interference, and (2) this device must accept any interference received, including interference that may cause undesired operation.

FCC Caution: Any changes or modifications not expressly approved by the party responsible for compliance could void the user's authority to operate this equipment.

This device and its antenna(s) must not be co-located or operation in conjunction with any other antenna or transmitter.

IMPORTANT NOTE:

FCC Radiation Exposure Statement:
This equipment complies with FCC radiation exposure limits set forth for an uncontrolled environment.

This equipment should be installed and operated with minimum distance 20cm between the radiator & your body.

This module is intended for OEM integrator. The OEM integrator is still responsible for the FCC compliance requirement of the end product, which integrates this module.

USERS MANUAL OF THE END PRODUCT:

In the users manual of the end product, the end user has to be informed to keep at least 20cm separation with the antenna while this end product is installed and operated. The end user has to be informed that the FCC radio-frequency exposure guidelines for an uncontrolled environment can be satisfied. The devices must be installed and used in strict accordance with the manufacturer's instructions as described in the user documentation that comes with the product.The end user has to also be informed that any changes or modifications not expressly approved by the manufacturer could void the user's authority to operate this equipment. If the device is small or for such use that it is not practicable to place the statement on the product, then additional FCC part 15.19 statement is required to be available in the users manual: This device complies with Part 15 of FCC rules. Operation is subject to the following two conditions: (1) this device may not cause harmful interference and (2) this device must accept any interference received, including interference that may cause undesired operation.

LABEL OF THE END PRODUCT:

The final end product must be labeled in a visible area with the following " Contains FCC ID: BEJ-F1DA2835P ". If the device is small or for such use that it is not practicable to place the statement on the product, then the following FCC part 15.19 statement has to also be available on the label: This device complies with Part 15 of FCC rules. Operation is subject to the following two conditions: (1) this device may not cause harmful interference and (2) this device must accept any interference received, including interference that may cause undesired operation.

IC Statement

This Class B digital apparatus complies with Canadian ICES-003.
This device complies with Industry Canada license-exempt RSS standard(s).
Operation is subject to the following two conditions: (1) this device may not cause interference, and (2) this device must accept any interference, including interference that may cause undesired operation of the device.
Cet appareil numérique de la classe B est conforme á la norme NMB-003 du Canada.
Le présent appareil est conforme aux CNR d'Industrie Canada applicables aux appareils radio exempts de licence. L'exploitation est autorisée aux deux conditions suivantes : (1) l'appareil ne doit pas produire de brouillage, et (2) l'utilisateur de l'appareil doit accepter tout brouillage radioélectrique subi, même si le brouillage est susceptible d'en compromettre le fonctionnement.

Any changes or modifications not expressly approved by the manufacturer could void the user's authority to operate this equipment.

This device and its antenna(s) must not be co-located or operation in conjunction with any other antenna or transmitter.

The device could automatically discontinue transmission in case of absence of information to transmit, or operational failure. Note that this is not intended to prohibit transmission of control or signaling information or the use of repetitive codes where required by the technology.

IMPORTANT NOTE:

IC Radiation Exposure Statement

This equipment complies with IC RSS-102 radiation exposure limits set forth for an uncontrolled environment. This equipment should be installed and operated with minimum distance 20cm between the radiator & your body.
Cet équipement est conforme aux limites d'exposition aux rayonnements IC établies pour unenvironnement non contrôlé. Cet équipement doit être installé et utilisé avec un minimum de 20cm de distance entre la source de rayonnement et votre corps.

This module is intended for OEM integrator. The OEM integrator is still responsible for the IC compliance requirement of the end product, which integrates this module.

USERS MANUAL OF THE END PRODUCT:

In the users manual of the end product, the end user has to be informed to keep at least 20cm separation with the antenna while this end product is installed and operated. The end user has to be informed that the IC radio-frequency exposure guidelines for an uncontrolled environment can be satisfied. The end user has to also be informed that any changes or modifications not expressly approved by the manufacturer could void the user's authority to operate this equipment. If the device is small or for such use that it is not practicable to place the statement on the product, then following IC statement is required to be available in the users manual: IC statement is required to be available in the users manual: This device complies with Industry Canada license-exempt RSS standard(s). This Class B digital apparatus complies with Canadian ICES-003. Operation is subject to the following two conditions: (1) this device may not cause harmful interference and (2) this device must accept any interference received, including interference that may cause undesired operation.

LABEL OF THE END PRODUCT:

The final end product must be labeled in a visible area with the following
" Contains IC : 2703H-F1DA2835P "

Transmit Antenna Notice

This radio transmitter [IC: 2703H-F1DA2835P] has been approved by Innovation, Science and Economic Development Canada to operate with the antenna types listed below, with the maximum permissible gain indicated. Antenna types not included in this list that have a gain greater than the maximum gain indicated for any type listed are strictly prohibited for use with this device.

Antenna list (type, maximum gain(dBi))

Model	Type	Maximum gain (dBi)
F1-FR4-ANT : F1304R	SMD	2.1