Composition Touch, Composition Colour

Radio

L69VW2

Composition Touch, Composition Colour:
Radio
Stand: 21.08.2013
Englisch: 11.2013
Artikel-Nr.: 142.5R6.RCT.20

1425R6RCT20

CONFIDENTIAL
not for distribution

CONFIDENTIAL
not for distribution

Description of symbols

Refers to a section within a chapter that contains important information and safety notes ⚠ that should always be observed.

Indicates that the section is continued on the next page.

Indicates the end of a section.

Indicates situations in which the vehicle must be stopped as quickly as possible.

® ™ Indicates a registered trademark. However, the absence of this symbol does not constitute a waiver of the rights concerning any term.

⇒ ⚠ ⇒ ⚠ ⇒ ⚠ Symbols like these refer you to warnings within the same section or on a given page. They draw your attention to possible risks of accident or injury and explain how they can be avoided.

⇒ ⓘ Cross reference to information about possible damage to your vehicle within the same section or on a given page.

⚠ DANGER

Texts with this symbol indicate dangerous situations which will lead to fatal or severe injuries if you do not observe the warning.

⚠ WARNING

Texts with this symbol indicate dangerous situations which could lead to fatal or severe injuries if you do not observe the warning.

⚠ CAUTION

Texts with this symbol indicate dangerous situations which could lead to slight or severe injuries if you do not observe the warning.

NOTICE

Texts with this symbol indicate situations which could cause damage to the vehicle or vehicle equipment if you do not observe the warning.

Texts with this symbol contain additional information on the protection of the environment.

Texts with this symbol contain additional information.

CONFIDENTIAL
not for distribution

Volkswagen AG works continuously to develop and further improve all models. Please understand that we must therefore reserve the right to alter any part of the vehicle and its equipment or technical specifications at any time. The data provided concerning scope of delivery, appearance, performance, dimensions, weights, fuel consumption, standards and vehicle functions are all correct at the time of going to print. Some of the equipment described might not yet be available in a particular vehicle (information can be provided by your local Volkswagen dealership), and some equipment may not be available in certain countries. No legal commitment may be inferred from the information, illustrations or descriptions in this manual.

No part of this manual may be reprinted, reproduced or translated without the written permission of Volkswagen AG.

All rights under the laws of copyright are expressly reserved by Volkswagen AG. Subject to alteration and amendment.

Printed in Germany.

© Volkswagen AG 2013

This paper was bleached without the use of chlorine.

CONFIDENTIAL
not for distribution

FCC Compliance Statement [Level 4]

<North America>

This device complies with part 15 of the FCC Rules. Operation is subject to the following two conditions: (1) This device may not cause harmful interference, and (2) this device must accept any interference received, including interference that may cause undesired operation.

NOTE:

This equipment has been tested and found to comply with the limits for a Class B digital device, pursuant to Part 15 of the FCC Rules. These limits are designed to provide reasonable protection against harmful interference in a residential installation. This equipment generates, uses, and can radiate radio frequency energy and, if not installed and used in accordance with the instructions, may cause harmful interference to radio communications. However, there is no guarantee that interference will not occur in a particular installation. If this equipment does cause harmful interference to radio or television reception, which can be determined by turn-ing the equipment off and on, the user is encouraged to try to correct the interference by one or more of the following measures:

- Reorient or relocate the receiving antenna.
- Increase the separation between the equipment and receiver.
- Connect the equipment into an outlet on a circuit different from that to which the receiver is connected.
- Consult the dealer or an experienced radio/TV technician for help.

Caution:

Any changes or modifications in construction of this device which are not expressly approved by the party responsible for compliance could void the user's authority to operate the equipment.

<Canada>

This Class B digital apparatus complies with Canadian ICES-003 "To prevent radio interference to the licensed service, this device is intended to be operated indoors and away from windows to provide maximum shielding. Equipment (or its transmit antenna) that is installed outdoors is subject to licensing."

Cet appareil numérique de la classe B est conforme à la norme NMB-003 «Pour empêcher que cet appareil cause du brouillage au service faisant l'objet d'une licence, il doit être utilisé à l'intérieur et devrait être placé loin des fenêtres afin de fournir un écran de blindage maximal. Si le matériel (ou son antenne d'émission) est installé à l'extérieur, il doit faire l'objet d'une licence.»

Operation is subject to the following two conditions :

(1) This device may not cause Interference, and (2) this device must accept any interference, including interference that may cause undesired operation of the device.

PRODUCT SPECIFICATION

MODEL	L69VW2-C04A L69VW2-C04B	L69VW2-R13A L69VW2-R13B L69VW2-R15C
Dimensions (mm) W	292.8	292.8
Dimensions (mm) H	176.3	176.3
Dimensions (mm) D	202.03	202.03
Weight (KG)	1.77	1.36
Power Requirement	9V~18V	9V~18V
Power Consumption	25W * 4CH	25W * 4CH

Bluetooth Specification

Standard	Bluetooth Version 4.0
Frequency Range	2400 ~ 2483.5 MHz
Output Power (Max.)	+4 dBm Max.

About this manual

- An alphabetical index is included at the end of this manual.
- A list of abbreviations explains technical abbreviations and terms.
- Directions and positions (e.g. right, left, front, rear) are normally relative to the vehicle's direction of travel.
- Illustrations help with orientation and should be regarded as a general guide.
- In right-hand drive vehicles the controls may sometimes be different to those displayed in illustrations or described in the text.

All equipment and models are described without indicating whether the equipment is optional or specific to the model type. This means that some of the equipment described might not be fitted in your vehicle. Your Volkswagen dealership can provide more information on this.

All details provided in this manual correspond to the information available at the time of going to print and apply only to factory-fitted infotainment systems. Due to continuous technical improvement of the infotainment system and possible updates to the unit's software, the displays and functions on the infotainment system may differ from the details given in this manual. No claims may be derived from the differing details, illustrations or descriptions.

Please ensure that this manual is in the vehicle if you lend or sell the vehicle to someone else. ◁

CONFIDENTIAL
not for distribution

Introduction

Before using the unit for the first time

Before using the infotainment system for the first time, carry out the following steps. This will enable you to use the infotainment system safely and make full use of the functions it provides:

- ✓ Observe safety notes ⚠ ⇒page 3.
- ✓ Familiarise yourself with the controls for the infotainment system ⇒page 7.
- ✓ In the `System setup`, reset the infotainment system to its original condition (factory settings) ⇒page 40.
- ✓ Use suitable data storage devices for media mode ⇒page 20.

Safety information for the infotainment system

⚠ WARNING

Accidents and injuries can occur if the driver is distracted. Operating the infotainment system can distract you from the road.

- **Always drive carefully and responsibly.**
- **Select volume settings that allow signals from outside the vehicle (such as emergency services sirens) to be easily heard at all times.**
- **Setting the volume too high may damage your hearing. This also applies even if you are only exposed to high volumes for short periods.**

⚠ WARNING

The volume level may suddenly change when you switch audio source or connect a new audio source.

- **Reduce the base volume before switching audio source or connecting a new audio source.**

⚠ WARNING

Connecting, inserting or removing a storage device while the vehicle is in motion can distract you from the road and lead to accidents.

⚠ WARNING

Connecting leads for external devices may obstruct the driver.

- **Arrange the connecting leads so that they do not obstruct the driver.**

⚠ WARNING

External devices that are placed loose in the vehicle or not properly secured can be flung though the interior and cause injuries during a sudden driving or braking manoeuvre, or in the event of an accident.

- **You should never position or attach an external device on a door, on the windscreen or above or near to the areas marked “AIRBAG” on the steering wheel, the dash panel and the seat backrests, or between these areas and the vehicle occupants. External devices can cause serious injury in an accident, especially when the airbags deploy.**

⚠ WARNING

The armrest may obstruct the driver's arm movements, which could cause accidents and severe injuries.

- **Always keep the armrest down while the vehicle is in motion.**

⚠ WARNING

Opening the housing on a CD player can lead to injuries from invisible laser radiation.

- **CD players should only be repaired by a qualified workshop.**

NOTICE

The infotainment system can be damaged by incorrect insertion of a storage device or insertion of an incompatible storage device.

CONFIDENTIAL
not for distribution

NOTICE (Continued)

- When inserting a memory card, ensure that it is correctly positioned ⇒page 20.
- Applying force may destroy the memory card slot's locking mechanism.
- Only use suitable memory cards.
- When inserting and removing a CD, always hold it flat and at a right angle to the front of the unit. Inserting or removing a CD at an angle to the drive can lead to scratching ⇒page 20.
- Inserting a second CD while a CD is already in the CD drive or being ejected can destroy the CD drive in the unit. Always wait until the CD is completely ejected!

NOTICE

The CD drive can be damaged by any foreign objects attached to a storage device, and by irregularly shaped storage devices.

NOTICE (Continued)

- Only clean 12 cm standard CDs should be used.
  - Do not affix stickers or other items to the data storage device. Stickers may peel off and damage the CD drive.
  - Do not use printable data storage devices. Coatings and prints may peel off and damage the drive.
  - Do not insert 8 cm single CDs or irregularly shaped CDs or DVDs.
  - Do not insert DVD Plus discs, dual discs or flip discs, as these are thicker than normal CDs.

NOTICE

The vehicle loudspeakers may be damaged if the volume is too high or the sound is distorted. ◁

CONFIDENTIAL
not for distribution

CONFIDENTIAL
not for distribution

Overview of the control elements

Fig. 1 Overview of the control elements

Different versions of the infotainment system are supplied. The labelling and functions of the infotainment buttons ⇒ Fig. 1 ② and the position of the CD slot ⑤ may vary between versions.

① **Rotary/push knob:**
- *Press* to switch on or off ⇒ page 7.
- *Turn* to adjust the basic volume on whichever source is in use ⇒ page 7.

② **Infotainment buttons**: *press* a button to select a function.
- RADIO: switches to radio mode and changes frequency band in radio mode ⇒ page 12.
- MEDIA: switches to media mode ⇒ page 20.
- CAR: opens vehicle and system settings ⇒ Booklet *Owner's manual*, chapter *Introduction to the infotainment system*.
- SETUP: opens menu and system settings ⇒ page 40.
- SOUND: opens sound and volume settings ⇒ page 40.
- EJECT: ejects the CD ⇒ page 20.
- MUTE: mute the audio source ⇒ page 8.
- PHONE: opens the telephone control system ⇒ page 30. The current audio source is muted if no mobile telephone provision is installed.

③ **Touchscreen** ⇒ page 7.

④ **Setting knob**: the function of this button depends on the unit's operating state.
- In **all radio modes: turn** for manual station or channel selection. **Press** to start and stop the scan function ⇒ page 12.
- In **media mode:** *turn* to open the track list. *Press* to start and stop the scan function ⇒ page 20.
- *Turn* to select menu options in long lists and *press* to access the selected option (e.g. select a station from the station list).

⑤ **CD slot**: for inserting and removing CDs ⇒ page 20.

⑥ **AUX-IN socket**: for connecting an external audio source ⇒ page 20.

⑦ **Memory card slot**: the slot is located underneath or to the left of the screen, depending on the unit version ⇒ page 20. ◁

Confidential not for distribution

Overview of the control elements

Fig. 1 Overview of the control elements

Different versions of the infotainment system are supplied. The labelling and functions of the infotainment buttons ⇒ Fig. 1 ② and the position of the CD slot ⑤ may vary between versions.

① **Rotary/push knob:**
- *Press* to switch on or off ⇒ page 7.
- *Turn* to adjust the basic volume on whichever source is in use ⇒ page 7.

② **Infotainment buttons**: *press* a button to select a function.
- RADIO: switches to radio mode and changes frequency band in radio mode ⇒ page 12.
- MEDIA: switches to media mode ⇒ page 20.
- CAR: opens vehicle and system settings ⇒ Booklet *Owner's manual*, chapter *Introduction to the infotainment system*.
- SETUP: opens menu and system settings ⇒ page 40.
- SOUND: opens sound and volume settings ⇒ page 40.
- EJECT: ejects the CD ⇒ page 20.
- MUTE: mute the audio source ⇒ page 8.
- PHONE: opens the telephone control system ⇒ page 30. The current audio source is muted if no mobile telephone provision is installed.

③ **Touchscreen** ⇒ page 7.

④ **Setting knob**: the function of this button depends on the unit's operating state.
- In **all radio modes: turn** for manual station or channel selection. **Press** to start and stop the scan function ⇒ page 12.
- In **media mode:** *turn* to open the track list. *Press* to start and stop the scan function ⇒ page 20.
- *Turn* to select menu options in long lists and *press* to access the selected option (e.g. select a station from the station list).

⑤ **CD slot**: for inserting and removing CDs ⇒ page 20.

⑥ **AUX-IN socket**: for connecting an external audio source ⇒ page 20.

⑦ **Memory card slot**: the slot is located underneath or to the left of the screen, depending on the unit version ⇒ page 20. ◁

SKODA not for distr

Overview of the control elements

Fig. 1 Overview of the control elements

Different versions of the infotainment system are supplied. The labelling and functions of the infotainment buttons ⇒ Fig. 1 ② and the position of the CD slot ⑤ may vary between versions.

① **Rotary/push knob:**
- *Press* to switch on or off ⇒ page 7.
- *Turn* to adjust the basic volume on whichever source is in use ⇒ page 7.

② **Infotainment buttons**: *press* a button to select a function.
- RADIO: switches to radio mode and changes frequency band in radio mode ⇒ page 12.
- MEDIA: switches to media mode ⇒ page 20.
- CAR: opens vehicle and system settings ⇒ Booklet *Owner's manual*, chapter *Introduction to the infotainment system*.
- SETUP: opens menu and system settings ⇒ page 40.
- SOUND: opens sound and volume settings ⇒ page 40.
- EJECT: ejects the CD ⇒ page 20.
- MUTE: mute the audio source ⇒ page 8.
- PHONE: opens the telephone control system ⇒ page 30. The current audio source is muted if no mobile telephone provision is installed.

③ **Touchscreen** ⇒ page 7.

④ **Setting knob**: the function of this button depends on the unit's operating state.
- In **all radio modes: turn** for manual station or channel selection. **Press** to start and stop the scan function ⇒ page 12.
- In **media mode:** *turn* to open the track list. *Press* to start and stop the scan function ⇒ page 20.
- *Turn* to select menu options in long lists and *press* to access the selected option (e.g. select a station from the station list).

⑤ **CD slot**: for inserting and removing CDs ⇒ page 20.

⑥ **AUX-IN socket**: for connecting an external audio source ⇒ page 20.

⑦ **Memory card slot**: the slot is located underneath or to the left of the screen, depending on the unit version ⇒ page 20. ◁

CONFIDENTIAL
not for distribution

Overview of the control elements

Fig. 1 Overview of the control elements

Different versions of the infotainment system are supplied. The labelling and functions of the infotainment buttons ⇒ Fig. 1 ② and the position of the CD slot ⑤ may vary between versions.

① **Rotary/push knob:**
- *Press* to switch on or off ⇒ page 7.
- *Turn* to adjust the basic volume on whichever source is in use ⇒ page 7.

② **Infotainment buttons**: *press* a button to select a function.
- RADIO: switches to radio mode and changes frequency band in radio mode ⇒ page 12.
- MEDIA: switches to media mode ⇒ page 20.
- CAR: opens vehicle and system settings ⇒ Booklet *Owner's manual*, chapter *Introduction to the infotainment system*.
- SETUP: opens menu and system settings ⇒ page 40.
- SOUND: opens sound and volume settings ⇒ page 40.
- EJECT: ejects the CD ⇒ page 20.
- MUTE: mute the audio source ⇒ page 8.
- PHONE: opens the telephone control system ⇒ page 30. The current audio source is muted if no mobile telephone provision is installed.

③ **Touchscreen** ⇒ page 7.

④ **Setting knob**: the function of this button depends on the unit's operating state.
- In **all radio modes: turn** for manual station or channel selection. **Press** to start and stop the scan function ⇒ page 12.
- In **media mode:** *turn* to open the track list. *Press* to start and stop the scan function ⇒ page 20.
- *Turn* to select menu options in long lists and *press* to access the selected option (e.g. select a station from the station list).

⑤ **CD slot**: for inserting and removing CDs ⇒ page 20.

⑥ **AUX-IN socket**: for connecting an external audio source ⇒ page 20.

⑦ **Memory card slot**: the slot is located underneath or to the left of the screen, depending on the unit version ⇒ page 20. ◁

Confidential
not for distr

General information on operating the unit

Introduction

This chapter contains information on the following subjects:

Rotary/push knobs and infotainment buttons . 7
Switching on and off 7
Adjusting base volume 8
Operating function buttons and displays on the screen 8
Selecting list entries and browsing lists 9
Input windows with on-screen keypad 10
Additional display information and display options 11

Changes to settings may cause the display content to vary and some aspects of the infotainment system operation to differ from the descriptions given in this manual.

Additional information and warnings:

- Safety information ⚠ for infotainment system ⇒page 3
- Overview of the control elements ⇒page 6

Lightly pressing the buttons or briefly touching the touchscreen is sufficient to operate the infotainment system.

Not all listed function buttons and functions may be available due to the device software used in your market. The equipment is not faulty if a function button is missing from the screen.

Due to country-specific legislation, certain functions cannot be selected on the screen when the vehicle is travelling above a certain speed.

Using a mobile telephone in the vehicle may cause noise from the vehicle loudspeakers.

There may be restrictions on the use of Bluetooth® devices in some countries. Information is available from the local authorities.

In some vehicles equipped with ParkPilot, the volume of the current audio source is automatically lowered when reverse gear is engaged. Volume reduction can be set in the **`Sound setup`** menu⇒page 42. ◁

Rotary/push knobs and infotainment buttons

First read and observe the safety warnings ⚠ on page 3 and the introductory information on page 7.

Rotary/push knobs

The left-hand rotary/push knob ⇒Fig. 1 ① is referred to as the volume control or the on/off switch.

The right-hand rotary/push knob ⇒Fig. 1 ④ is referred to as the setting knob.

Infotainment buttons

This manual uses a button symbol with blue content and the term “infotainment button” to refer to buttons on the infotainment system, e.g. the infotainment button MEDIA.

Infotainment buttons are operated either by *pressing* them or by *pressing and holding*. ◁

Switching on and off

First read and observe the safety warnings ⚠ on page 3 and the introductory information on page 7.

To switch the infotainment system on or off manually, briefly *press* the rotary/push knob ⇒Fig. 1 ①.

After switching on, the system starts at the last selected volume setting, provided that this does not exceed the preselected maximum switch-on volume ⇒page 42, *Sound and volume settings*.

Depending on the unit version and the country, the infotainment system may switch off automatically when the engine is switched off or the vehicle key ▶

CONFIDENTIAL not for distribution

is removed from the ignition lock. If the infotainment system is switched on again, it will switch off automatically after approximately 30 minutes (switch-off delay).

The infotainment system is permanently linked to the vehicle. It cannot be used in another vehicle.

If the vehicle battery has been disconnected, the ignition must be switched on before switching the infotainment system back on. ◁

Adjusting base volume

First read and observe the safety warnings ⚠ on page 3 and the introductory information on page 7.

Function: action
Increasing the volume: turn the volume control ⇒ Fig. 1 ① clockwise or press the button on the multifunction steering wheel ⇒ Booklet *Owner's manual*.
Decreasing volume: turn the volume control ⇒ Fig. 1 ① anticlockwise or press the button on the multifunction steering wheel.

Changes to the base volume are indicated by a "bar" on the screen. During this time the infotainment system cannot be operated.

It is possible to preset certain volume settings and adjustments ⇒ page 42.

Muting the infotainment system

- Turn the volume control ⇒ Fig. 1 ① anticlockwise until is displayed.
- **OR:** press the MUTE infotainment system button[1] ⇒ Fig. 1 ②.

Any media source currently being played is stopped while the infotainment system is muted. appears on the display.

If the base volume has been considerably increased to play a certain audio source, reduce the volume again before switching to another audio source. ◁

Operating function buttons and displays on the screen

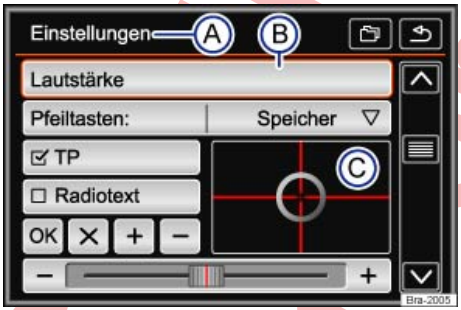

Fig. 2 Overview of possible function buttons on the screen

First read and observe the safety warnings ⚠ on page 3 and the introductory information on page 7.

The infotainment system is equipped with a touchscreen ⇒ Fig. 1 ③.

Active areas of the screen where certain functions can be accessed are called "function buttons". These buttons are operated by briefly *touching* the screen or by *touching and holding*. Function buttons are referred to in this manual with the word "function button" and a button symbol ...

Function buttons start functions or open submenus. In submenus the name of the currently selected menu is displayed in the title bar ⇒ Fig. 2 Ⓐ. ▶

[1] Depending on the unit version.

CONFIDENTIAL
not for distribution

Inactive (grey) function buttons cannot be selected.

Overview of displays and function buttons

Displays and function buttons: action and effect	
Ⓐ	In the title bar, the currently selected menu and any other possible function buttons are displayed.
Ⓑ	Touch to open a further menu.
Ⓒ	Move the crosshair across the screen with slight pressure without losing contact. **OR**: touch the desired position on the screen, the crosshair moves to this position.
[🗀]	Touch to move up one level at a time from certain lists.
[↩]	Touch to move up one level at a time to the main menu from a submenu or to undo inputs made.
[... ▽]	Touch to open a pop-up window (option window), displaying further setting options.
[☑ ...] / [☐ ...]	Some functions or displays are marked with a checkbox and are activated ☑ or deactivated ☐ by touching this box.
[OK]	Touch to confirm an input or selection.
[✖]	Touch to close a pop-up window or an input window.
[+] / [-]	Touch to change settings incrementally.
[▭]	Move the slider across the screen with slight pressure without losing contact. ◁

Selecting list entries and browsing lists

Fig. 3 List entries settings menu

First read and observe the safety warnings ⚠ on page 3 and the introductory information on page 7.

List entries can be opened by touching them directly on the screen or by using the setting knob ⇒ Fig. 1 ④.

Marking and selecting list entries with the setting knob

- *Turn* the setting knob to mark each consecutive list entry with a selection box so you can browse through the list.
- *Press* the setting knob to select the marked list entry.

Browsing lists (scrolling)

If there are more items available in a list view than can be displayed on the screen, function buttons for scrolling or a scroll bar are displayed on the right of the screen ⇒ Fig. 3.

- *Browsing lists line-by-line*: touch the [△] or [▽] function button briefly.
- *Browsing lists page-by-page*: *briefly* touch the screen above or below the scroll marker.
- *Browsing long lists quickly page-by-page*: *touch and hold* the screen above or below the scroll marker.
- *To quickly scan through a long list*, place your finger on the scroll marker and move it over the screen *without losing contact*. Lift your finger off the screen when you reach the desired position. ◁

CONFIDENTIAL not for distribution

Input windows with on-screen keypad

Fig. 4 Input window with on-screen keyboard

First read and observe the safety warnings ⚠ on page 3 and the introductory information on page 7.

Input windows with on-screen keyboard allow you to enter text, such as an entry name for storing a destination or a search term for searching in long lists.

Not all of the function buttons listed here are available in all countries and for all topics.

Subsequent chapters only explain those functions that differ from the general view described here.

Overview of function buttons

Function buttons: action and effect	
①	123...: touch to open the input window for numbers and special characters. ABC...: touch to go back to the input window for letters.
②	Displays the number and opens the list of entries corresponding to the specifications that are still available.
Letters/numbers	Touch to insert the character in the input line.
Letters and ▽	Press and hold to open a pop-up window with special characters based on the letter shown. Touch the desired character to enter it. Some special characters can also be written out (e.g. “AE” for “Ä”).
⇧	Touch to switch between upper and lower case.
␣	Touch to enter a space.
OK	Touch to accept the suggestion in the input line and close the input window.
⌫	Touch to delete characters in the input line from right to left. Press and hold to delete several characters at once.
⮌	Touch to close the input window. ◁

The input line with the cursor is located on the left in the top line of the screen *. All inputs are displayed here.

Input windows for free text input

An input window for free text entry allows any letter, number and special character to be entered in any combination.

Touching the OK function button applies the sequence of characters currently displayed in the window.

Input windows for selecting a stored entry

It is only possible to select a sequence of letters, numbers and special characters that matches a stored entry.

Every time a character is entered, a destination corresponding to the specifications is proposed in the input line. When terms are made up of more than one word, the space must be entered as well.

If fewer than 99 entries are available, the number of remaining entries is displayed after the input line ⇒ Fig. 4 ②. Touching this function button displays a list of these remaining entries.

CONFIDENTIAL
not for distribution

Additional display information and display options

First read and observe the safety warnings ⚠ on page 3 and the introductory information on page 7.

The displays that appear on the screen can vary depending on the settings, and may differ from those described here.

Displays such as the current time and the current outside temperature can be displayed on the screen in the status bar.

All displays appear only after the infotainment system has completed start-up. ◁

CONFIDENTIAL
not for distribution

Audio mode

Radio mode

Introduction

This chapter contains information on the following subjects:

RADIO main menu 12
RDS radio data service 13
Station buttons 14
Selecting, setting and storing stations 14
Scan function (SCAN) 16
Radio text 16
TP function (traffic program) 17
Incoming traffic announcement 17
FM/AM settings 18

Additional information and warnings:

- Safety information ⚠ for infotainment system ⇒ page 3
- Overview of the control elements ⇒ page 6
- Basic information on use ⇒ page 7
- Menu and system settings (SETUP) ⇒ page 40

Multi-storey car parks, tunnels, high buildings and mountains can impair radio reception.

Foil or metal-coated stickers attached to the windows may affect reception on vehicles with a window aerial. ◁

RADIO main menu

Fig. 5 RADIO main menu

Fig. 6 Radio mode station list

First read and observe the safety warnings ⚠ on page 3 and the introductory information on page 12.

Selecting the frequency band

- Select the required frequency band by pressing the RADIO infotainment button.

Function buttons in the RADIO main menu

Function button: effect	
①	Changes the displayed station button group by touching the function button.
	Opens the list of currently receivable radio stations ⇒ page 14.
	Opens the frequency dial for the selected frequency band ⇒ page 15.
	Opens the settings menu for the currently activated frequency band (FM or AM) ⇒ page 18.

▶

CONFIDENTIAL
not for distribution

Function button: effect	
< / >	Browses through the available or stored stations. Setting for the arrow buttons in the **FM/AM setup** menu ⇒ page 18.
SCAN	The function button is only displayed while the scan function is on ⇒ page 16.
1... to 12...	Station buttons for storing stations ⇒ page 14.
↻	Updates the station list (**AM** frequency band) ⇒ page 15.

Possible displays and symbols

Display: meaning	
Ⓐ	Displays station frequency or station name, and also possibly radio text. Station name and radio text are only displayed when RDS is available and activated ⇒ page 13.
RDS off[a)]	The RDS radio data service is deactivated. RDS can be activated in the **FM setup** menu ⇒ page 18.
TP	TP traffic news is activated and can be received ⇒ page 17.
No TP	No traffic news station can be received.
☆	The radio station is stored to a station button.

a) Varies by country and unit version.

RDS radio data service

Fig. 7 RADIO main menu

Fig. 8 Radio mode station list

First read and observe the safety warnings ⚠ on page 3 and the introductory information on page 12.

RDS (radio data system) is a radio data service which enables additional FM services, such as the display of station names, automatic station tracking, radio text and TP traffic news (TP).

RDS is not supported by all units and is not available everywhere or on every FM radio station.

RDS can be deactivated in some country and unit versions ⇒ page 18.

Without RDS it is not possible to use **radio data services**.

Station name and automatic station tracking

If RDS is available, station names can be displayed in the *RADIO* main menu and in the **FM station list**.

FM radio stations may occasionally or continuously broadcast different content on different regional frequencies under the same station name (e.g. Radio 2).

By default, automatic station tracking always switches to the currently selected station's frequency that offers the best reception, as the vehicle travels from one area to the next. As a result, you may lose the regional programme you are listening to.

Automatic frequency changing and automatic station tracking can be deactivated in the **FM setup** ⇒ page 18.

Confidential not for distribution

The radio stations are responsible for the content of the information sent. ◁

Station buttons

Fig. 9 RADIO main menu

First read and observe the safety warnings ⚠ on page 3 and the introductory information on page 12.

In the *RADIO* main menu, you can store stations from the currently selected frequency band on 12 consecutively numbered function buttons. These function buttons are called station buttons.

Selecting stations via the station buttons	Touch the station button that shows the required station. When a stored station is selected via the station buttons, it will only be played if it can be received at your current location.
Changing station button group	Touch the ⇒ Fig. 9 ① function button. The station buttons are displayed in groups of four function buttons (1 ... to 4 ..., 5 ... to 8 ... and 9 ... to 12 ...).
Displaying station buttons	If radio text is shown instead of the station buttons, touch radio text in order to show the station buttons.
Storing stations to station buttons	See Storing stations ⇒ page 15.

◁

Selecting, setting and storing stations

Fig. 10 RADIO main menu

Fig. 11 Radio mode station list ▶

CONFIDENTIAL
not for distribution

First read and observe the safety warnings ⚠ on page 3 and the introductory information on page 12.

Selecting stations

Selecting stations using arrow buttons < / >	Touch the < or > ⇒ Fig. 10 function button. The unit only switches to stored or receivable stations, depending on what settings have been made for the arrow buttons. Setting for the arrow buttons in the **FM/AM setup** menu ⇒ page 18.
Selecting stations from a station list	Touch the ≡ ⇒ Fig. 10 function button to open the station list. Search through the list and touch the required station to select it. To close the station list, touch the ⮌ ⇒ Fig. 11 function button.
Updating the station list	In the **FM** frequency band the station list is updated automatically. In the **AM** frequency band, touch the ↻ ⇒ Fig. 11 function button to update the station list.

Tuning to a station frequency manually

Displaying the frequency dial	Turn the setting knob *one stop further*. **OR**: touch the ⊞ ⇒ Fig. 10 function button.
Adjusting the frequency in stages	*Turn* the setting knob. **OR**: touch the arrow buttons to the left or the right of the frequency band.
Quickly browsing through the frequency band	*Touch* one of the arrow buttons **at the top** of the screen ⇒ Fig. 10. The next receivable station is set automatically. **OR**: *press and hold* one of the arrow buttons **at the top** of the screen ⇒ Fig. 10. When you *release* the button, the unit automatically tunes to the next available station. **OR**: place your finger on the slider in the frequency dial and drag it along the dial.
Hiding the frequency band	*Briefly press* the setting knob. Manual frequency selection is also closed if you select a station with a station button. The frequency band closes automatically after a period of inactivity.

Storing stations

Storing the current station to a station button	*Press and hold* the desired station button ⇒ Fig. 10 until a tone is sounded. The station currently playing is then stored on that station button.
Storing a station from the station list to a station button	Touch the ≡ ⇒ Fig. 10 function button to open the station list. Stations already stored on a station button are marked in the station list with the ☆ ⇒ Fig. 11 symbol. Select the desired station by *pressing and holding* on the screen. Touch the button to which you wish this station to be assigned. A signal tone sounds, and the station is then stored on this station button. Repeat the process to store further stations from the station list.
Deleting stored stations	All stored stations can be deleted individually or together in the **FM/AM setup** menu ⇒ page 18.

CONFIDENTIAL not for distribution

142.5R6.RCT.20

Stopping station names scrolling (FM frequency)

Some radio stations transmit a very long station name, which is shown on the screen as a scrolling text.

To fix the text that is currently displayed to the screen, touch the station name and hold until a tone is sounded.

Fixed station names are indicated by a dot to each side of the name.

The fixed text is adopted for all the station buttons on which the corresponding station is stored. ◁

Scan function (SCAN)

First read and observe the safety warnings ⚠ on page 3 and the introductory information on page 12.

When the scan function is running, all available stations on the current frequency band are played in sequence for approximately 5 seconds each. SCAN appears on the display.

Starting the scan function	Press the setting knob briefly. **OR**: touch the ⚙ function button and then select SCAN.
Stopping the scan function	Press the setting knob briefly. **OR**: touch the SCAN function button to end the scan function at the station arrived at. Manually selecting a station with the station buttons also stops the scan function. ◁

Radio text

Fig. 12 RADIO main menu

Fig. 13 Radio mode: radio text is visible

First read and observe the safety warnings ⚠ on page 3 and the introductory information on page 12.

Some RDS-compatible stations also broadcast additional text information known as radio text.

The station buttons can be hidden to enlarge the display area for the radio text ⇒ Fig. 13.

Hiding station buttons	Touch displayed radio text ⇒ Fig. 12.
Displaying station buttons	Touch displayed radio text ⇒ Fig. 13.
Switching off radio text permanently	In the **FM setup** menu, deactivate the ☑ Radio text function button by touching it ⇒ page 18. ◁

CONFIDENTIAL
not for distribution

TP function (traffic program)

Fig. 14 RADIO main menu with TP display

Fig. 15 Radio mode: station list with TP display

First read and observe the safety warnings ⚠ on page 3 and the introductory information on page 12.

Traffic news monitoring with the TP function is only possible if a traffic news station is available. Traffic news stations are indicated in the *RADIO* main menu and in the station list by **TP** ⇒ Fig. 14 and ⇒ Fig. 15.

Some stations that do not broadcast their own traffic news support the TP function through a link to a traffic news station (EON).

Switching the TP function on and off

- In the **FM/AM setup** menu, activate ☑ or deactivate ☐ the Traffic program (TP) function button by touching it ⇒ page 18.

If the station that is currently selected does **not** support the TP function, **No TP** will be shown in the top right of the screen.

Activated TP function and station selection

While traffic news monitoring is on, **TP** is displayed at the top right in audio mode ⇒ Fig. 14. Traffic announcements broadcast by the current station or a linked traffic news station will interrupt the current audio mode.

In **FM mode**, the **selected** station must support the TP function. After the TP function is switched on, if you change via the station buttons or manual selection to a station that does **not** support the TP function, traffic news monitoring will not be possible (display: **No TP**).

If the currently selected traffic news station can no longer be received, **No TP** is also displayed and you will have to start a manual station search ⇒ page 14.

In **AM** mode or **media mode**, the unit will always automatically tune to a traffic news station in the background, provided that a TP station is available. This procedure may take some time. ◁

Incoming traffic announcement

First read and observe the safety warnings ⚠ on page 3 and the introductory information on page 12.

Incoming traffic announcements will interrupt the active audio mode.

During the traffic announcement a pop-up window is displayed and, if required, the radio is switched to the traffic news station (EON) for the duration of the traffic announcement.

The media mode is paused and the volume is adjusted to the preset level ⇒ page 42. ▶

CONFIDENTIAL
not for distribution

The traffic announcement volume setting can be adjusted with the volume control ⇒ Fig. 1 ①. The adjusted volume setting will be applied to subsequent announcements.

- Touch the Cancel function button to end the traffic announcement. The TP function remains activated.
- **OR**: touch the Deactivate function button to end the current traffic announcement and permanently switch off the TP function. ◁

FM/AM settings

First read and observe the safety warnings ⚠ on page 3 and the introductory information on page 12.

FM setup

- Select the **FM** frequency band by pressing the RADIO infotainment button.
- Touch the function button to open the **FM setup** menu.

Function button: effect
Scan: scan function (SCAN). When the scan function is running, all available stations on the current frequency band are played in sequence for approximately 5 seconds each ⇒ page 16.
Arrow buttons: define the settings for the < und > arrow buttons. The setting is adopted for all frequency bands (FM, AM). Preset list: **all stored** stations on the selected frequency band can be browsed with the arrow buttons. Stations: **all available** stations on the selected frequency band can be browsed with the arrow buttons.
☑ Traffic program (TP): the TP function (traffic news monitoring) is activated ⇒ page 17.
☑ Radio text: radio text is activated ⇒ page 16.
Delete preset list: to delete some or all stored stations. All: all stored stations will be deleted (FM 1, FM 2, FM 3). To delete individual stations, selected the desired preset list FM 1, FM 2 or FM 3. Then touch the station button of the station you wish to delete.
Advanced setup: settings for the RDS radio data services. RDS Regional: defines the setting for automatic **station tracking** with RDS ⇒ page 13. Fixed: the unit only switches to alternative frequencies for the selected station that broadcast the same regional service. Automatic: the unit always switches to the station's frequency that currently offers the best reception. As a result, regional programmes may be interrupted. ☐ Radio Data System (RDS)[a]: the radio data system (RDS) is deactivated ⇒ page 13. If the ☐ checkbox is deactivated, the traffic program (TP) and radio text functions are not available. ☑ Alternative frequency (AF): automatic station tracking is activated. If the ☐ checkbox is deactivated, automatic station tracking is **switched off**. The RDS Regional function button is then inactive (greyed out).

a) Varies by country and unit version.

AM setup

- Select the **AM** frequency band by pressing the RADIO infotainment button.
- Touch the function button to open the **AM setup** menu. ▶

CONFIDENTIAL not for distribution

Function button: effect
Scan: scan function (SCAN). When the scan function is running, all available stations on the current frequency band are played in sequence for approximately 5 seconds each ⇒ page 16.
Arrow buttons: define the settings for the < und > arrow buttons. The setting is adopted for all frequency bands (FM, AM). Preset list: **all stored** stations on the selected frequency band can be browsed with the arrow buttons. Stations: **all available** stations on the selected frequency band can be browsed with the arrow buttons.
☑ Traffic program (TP): the TP function (traffic news monitoring) is activated ⇒ page 12.
Delete preset list: to delete some or all stored stations. All: all stored stations will be deleted (AM 1, AM 2, AM 3). To delete individual stations, select the desired preset list AM 1, AM 2 or AM 3. Then touch the station button of the station you wish to delete. ◁

CONFIDENTIAL
not for distribution

Media mode

Introduction

This chapter contains information on the following subjects:

Data storage device and file requirements . . . 20
Playing order of files and folders 21
MEDIA main menu 22
Changing the media source 23
Changing tracks in the MEDIA main menu . . . 24
Selecting tracks from the track list 24
Inserting or ejecting a CD 25
Inserting or removing a memory card 26
External data storage device connected to USB port 26
External audio source connected to the AUX-IN socket 27
Connecting an external audio source via Bluetooth® 28
Media settings 28

"**Media sources**" are audio sources containing audio files on various different storage devices (e.g. CD, memory card, external MP3 player). These audio files can be played by the infotainment system from its corresponding drives or audio input sockets (internal CD drive, memory card slot, AUX-IN socket etc.).

Copyright

Audio and video files stored on data storage devices are normally subject to national and international copyright laws. Observe legal requirements.

Additional information and warnings:

- Safety information ⚠ for infotainment system ⇒ page 3
- Overview of the control elements ⇒ page 6
- Basic information on use ⇒ page 7

This product is subject to certain intellectual property rights and copyrights owned by the Microsoft Corporation. The use or distribution of this type of technology outside this product requires a licence from Microsoft or an authorised Microsoft company.

Data storage device and file requirements

First read and observe the safety warnings ⚠ on page 3 and the introductory information on page 20.

Factory-fitted CD drives conform to safety class 1 according to DIN IEC 76 (CO) 6/ VDE 0837.

The infotainment system only accepts standard 12 cm CDs, and memory cards measuring 32 mm x 24 mm x 2.1 mm or 1.4 mm.

The supported file formats listed are collectively referred to below as "audio files". A CD containing audio files of these types is referred to as an "audio data CD".

Media source	Requirements for playing in the unit
Audio CDs (up to 80 minutes).	– CD Digital Audio specification.
CD-ROM, CD-R and CD-RW audio data CDs up to max. 700 MB (megabytes) with the file systems ISO 9660 Level 1 or 2, Joliet or UDF 1.02, 1.5, 2.01 SD and MMC memory cards with the file systems FAT12, FAT16, FAT32, VFAT or exFAT up to max. 2 GB (gigabytes), SDHC memory cards up to max. 32 GB and SDXC memory cards up to max. 2 TB (terabytes).	– MP3 files (.mp3) with bit rates of between 32 and 320 kbit/s or with variable bit rate. – WMA files (.wma) up to 10 mono/stereo without copy protection. – Playlists in the formats PLS, M3U and WPL. – Playlists no larger than 20 kB and containing no more than 1,000 entries. – File name and path information not longer than 256 characters.

CONFIDENTIAL not for distribution

Media source	Requirements for playing in the unit
AUX External audio source.	– Playback of external audio sources via 3.5 mm jack plug ⇒page 27.
Audio file playback via Bluetooth®[a].	– The external media player must support the A2DP Bluetooth® profile ⇒page 28.

a) Bluetooth® is a registered trademark of Bluetooth® SIG, Inc.

Restrictions and notes

Contamination, exposure to high temperatures and mechanical damage can render storage devices unusable. Please observe the manufacturer's instructions.

Variations in the quality of storage devices from different manufacturers can lead to problems during playback.

Please observe copyright laws.

The unit may be unable to read individual tracks or the entire storage device due to the storage device's configuration or the devices and programs used for recording. Information about the best ways to create audio files and configure storage devices (compression rate, ID3 tag etc.) can be found online.

The reading time may vary considerably depending on the condition of the storage device (copying and deleting actions), folder structure and file type.

Playlists only determine a certain playing order. There are **no** files stored in a playlist. The unit will **not** play a playlist if the files are **not** stored on the storage device at the locations referred to by the playlist (relative file paths).

Do not use memory card adapters.

No liability can be accepted for damaged or lost files on the storage devices. ◁

Playing order of files and folders

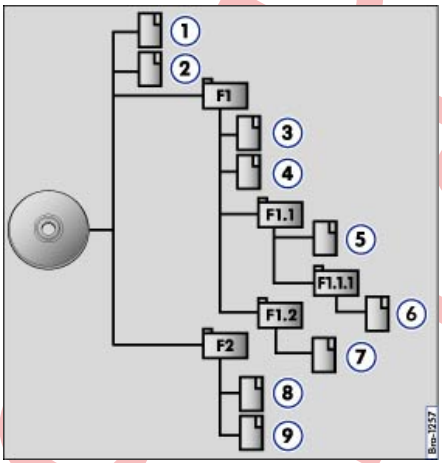

Fig. 16 Possible structure on an audio data CD

First read and observe the safety warnings ⚠ on page 3 and the introductory information on page 20.

Audio files on storage devices are often sorted by folders and playlists to determine a certain playing order.

Tracks, folders and playlists on a storage device are each sorted by name in alphanumeric order.

The illustration shows a typical audio data CD that contains tracks, folders and subfolders ⇒Fig. 16.

The tracks are played in the following order[1]:

1. Tracks ① and ② in the CD's root directory
2. Tracks ③ and ④ in the **first** folder **F1** in the CD's root directory
3. Track ⑤ in the **first** subfolder **F1.1** of the folder **F1**
4. Track ⑥ in the **first** subfolder **F1.1.1** of the subfolder **F1.1**
5. Track ⑦ in the **second** subfolder **F1.2** of the folder **F1**
6. Tracks ⑧ and ⑨ in the **second** folder **F2**

The playing order can be altered by selecting different playback modes ⇒page 22. ▶

1) The Mix/Repeat including subfolders function must be activated ⇒page 40 in the `Media setup` menu.

CONFIDENTIAL not for distribution

Playlists are **not** played automatically. Instead they must specifically selected via the track selection menu ⇒ page 24. ◁

MEDIA main menu

Fig. 17 MEDIA main menu

First read and observe the safety warnings ⚠ on page 3 and the introductory information on page 20.

In the *MEDIA* main menu, various media sources can be selected and played.

- Press the MEDIA infotainment button to open the *MEDIA* main menu ⇒ Fig. 17.

Playback of the media source that was most recently played resumes from the point where it stopped.

The media source currently playing is indicated at the bottom left in the function button 1.

The *MEDIA* main menu will indicate if no media source is available.

Function buttons in the MEDIA main menu

Function button: effect	
1	Indicates the media source currently selected. Touch to select a different media source ⇒ page 23. CD: internal CD drive ⇒ page 25. SD card: memory card ⇒ page 26. USB: external data storage device connected to USB port ⇒ page 26. AUX: external audio source connected to AUX-IN socket ⇒ page 27. BT audio: Bluetooth® audio ⇒ page 28.
♪≡	Opens the track list ⇒ page 24.
< / >	Changes track when in media mode ⇒ page 24
⏸	Playback stops. The ⏸ function button changes to ▷ ⇒ page 24.
▷	Playback is resumed. The ▷ function button changes to ⏸ ⇒ page 24.
⚙	Opens the **Media setup** menu ⇒ page 28.
⟲	Repeats all tracks. All tracks on the same memory level as the current track will be repeated. If ☑ Mix/repeat including subfolders is activated in **Media setup** subfolders are also included ⇒ page 28.
⟲1	Repeat current track.
⤮	Random play. All tracks on the same memory level as the current track are included. If ☑ Mix/repeat including subfolders is activated in **Media setup** subfolders are also included ⇒ page 28. ▶

CONFIDENTIAL
not for distribution

Function button: effect	
SCAN	When the scan function is running, all tracks in the current track list are played for approximately 10 seconds each. The function button is only displayed while the scan function is on. To start the scan function, press setting knob ⇒ Fig. 1 ④ or open the track list and touch the SCAN function button.

Displays and symbols in the MEDIA main menu

Display: meaning	
Ⓐ	Display of track information (CD text, ID3 tag with MP3 files). Audio CDs: **track** and track number corresponding to the track order on the CD are displayed. Audio files: **artist name**, **album name** and **track name** are displayed.
Ⓑ	Track playing time and remaining playing time in minutes and seconds. The remaining playing time displayed may differ for audio files with variable bit rate (VBR).
RDS off[a)]	The RDS radio data service is deactivated. RDS can be activated in the **FM setup** menu ⇒ page 12.
TP	TP is activated and can be received ⇒ page 12.
No TP	No traffic news station can be received.

a) Varies by market and unit version. ◁

Changing the media source

Fig. 18 MEDIA main menu

- In the *MEDIA* main menu, press the MEDIA infotainment button as often as required to switch between the available media sources.
- **OR**: in the *MEDIA* main menu, touch the ⇒ Fig. 18 ① function button and select the desired media source.

Media sources not currently available are shown as inactive (grey) in the pop-up window.

If a media source that has already been played is selected again, playback is resumed from the point that was last reached.

First read and observe the safety warnings ⚠ on page 3 and the introductory information on page 20.

Optionally selectable media sources

Function button: media source	
CD	Audio or audio data CD in the internal CD drive ⇒ page 25.
SD card	Memory card ⇒ page 26.
USB	External data storage device connected to USB ⇒ page 26.
AUX	External audio source connected to AUX-IN socket ⇒ page 27.
BT audio	Bluetooth® audio ⇒ page 28.

The media source can also be changed in the *Track list* view ⇒ page 24. ◁

CONFIDENTIAL
not for distribution

Changing tracks in the MEDIA main menu

Fig. 19 MEDIA main menu

First read and observe the safety warnings ⚠ on page 3 and the introductory information on page 20.

You can browse through the tracks of the media source that is currently playing using the arrow buttons.

You **cannot** switch to playback from a playlist using the arrow keys. Playback from a playlist must be started manually via the track selection menu ⇒ page 24, *Selecting tracks from the track list.*

Controlling playback via the MEDIA main menu

Action	Effect
Briefly touch the function button ⟨ once.	Goes to the start of the current track. If the track is shorter than 3 seconds, the system goes to the start of the previous track.
Briefly touch the function button ⟨ twice.	Goes to the start of the previous track. Changes from the first track to the last track on the storage device that is being played.
Briefly touch the function button ⟩ once.	Goes to the next track. Changes from the last track to the first track on the storage device that is being played.
Press and hold the ⟨ function button.	Fast reverse.
Press and hold the ⟩ function button.	Fast forward.
Briefly touch the ⏸ function button once.	Playback stops. The ⏸ function button changes to ▷.
Briefly touch the ▷ function button once.	Playback is resumed. The ▷ function button changes to ⏸.

◁

Selecting tracks from the track list

Fig. 20 Track list from a media source

First read and observe the safety warnings ⚠ on page 3 and the introductory information on page 20.

Opening the track list

- In the *MEDIA* main menu, touch the ♪≡ function button ⇒ Fig. 19 to open the track list. The track that is currently playing is highlighted ⇒ Fig. 20.
- Search through the track list and touch the desired track.

If track information is available, the track name is displayed instead of `Track + No.`. ▶

CONFIDENTIAL
not for distribution

Overview of function buttons in the track list

Function button: effect	
	Opens the **Sources** menu. Touch to select a different media source.
Ⓐ	Indicates the media source currently selected. Touch to change the media source. CD: internal CD drive ⇒page 25. SD card: memory card ⇒page 26. USB: external data storage device connected to USB port ⇒page 26. AUX: external audio source connected to AUX-IN socket ⇒page 27. BT audio: external media player connected via Bluetooth® ⇒page 28.
	Touch the function button to open the parent folder of the current folder on the media source. The name of the current folder will be displayed to the right of the symbol.
	Starts playback at the first track.
	Repeats all tracks. All tracks on the same memory level as the current track will be repeated. If Mix/repeat including subfolders is activated in **Media setup** subfolders are also included⇒page 28.
	Repeat current track.
	Random play. All tracks on the same memory level as the current track are included. If Mix/repeat including subfolders is activated in **Media setup** subfolders are also included⇒page 28.
SCAN	When the scan function is running, all tracks in the current track list are played for approximately 10 seconds each.
	Closes track list.

Tracks, folders and playlists can also be marked by turning the setting knob then loaded or opened up or opened by pressing the knob. ◁

Inserting or ejecting a CD

First read and observe the safety warnings ⚠ on page 3 and the introductory information on page 20.

The internal CD drive can play audio CDs and audio data CDs.

When an audio CD without CD text is playing, only **TITLE** and the track number, corresponding to the playing order on the data medium, are displayed in the centre line of the screen.

If the audio file CDs played contain additional track information (CD text, ID3 tag for MP3 files), it can be displayed on the screen.

Inserting a CD

- Hold the CD with the printed side facing up.
- Push the CD into the CD slot only to the point where it is drawn in automatically.
- When the CD is inserted, playback will start automatically.

Ejecting a CD

In some countries, the vehicle key must be in the ignition lock of a cabriolet vehicle in order to eject a CD (anti-theft protection).

- Press the EJECT infotainment button.
- The CD in the drive will be ejected and must be removed within approximately 10 seconds.

For safety reasons, the CD will be drawn back into the player if it is not removed within roughly 10 seconds, but the unit will not switch to CD mode.

CD cannot be read or is faulty

A message will be shown on the screen if the data on an inserted CD cannot be read or the CD is faulty.

Uneven road surfaces and strong vibrations can cause playback to jump. ▶

CONFIDENTIAL not for distribution

When the temperature inside the infotainment system is too high, loading and playback of CDs is disabled.

If you insert a number of different CDs and receive the message **Error: CD drive** every time, contact a qualified workshop. ◁

Inserting or removing a memory card

First read and observe the safety warnings ⚠ on page 3 and the introductory information on page 20.

Only supported audio files are displayed and played. Other files are ignored.

Inserting a memory card

Fig. 1 ⑦

Vertical card slot	Insert a compatible memory card into the memory card slot with the cut-off corner first and the lettering facing left (contact surfaces facing down) until the card clicks into place.
Horizontal card slot	Insert a compatible memory card into the memory card slot with the cut-off corner first and the label facing up (contact surfaces facing down) until the card clicks into place.

If a memory card cannot be inserted, ensure that it is positioned correctly and is compatible with the unit.

Playback starts automatically if supported audio files are stored on the memory card.

Removing a memory card

The inserted memory card **must** be prepared for removal.

- In the *MEDIA* main menu touch the [⚙] function button to open the **Media setup** menu.
- **OR**: press the [SETUP] infotainment button.
- Touch the [Remove the SD card safely] function button.
- **OR:** touch the [Remove safely] function button and then select [SD card].

Once the memory card has been ejected from the system, a message is shown on the screen and the function button is greyed out. The memory card can then be removed.

- Press the inserted memory card. The memory card springs out of the slot.
- Remove the memory card.

Memory card cannot be read

If you insert a memory card containing data that cannot be read, the unit will **not** change to memory card mode after loading.

A corresponding message is displayed. ◁

External data storage device connected to USB port

First read and observe the safety warnings ⚠ on page 3 and the introductory information on page 20.

In some countries and with some equipment levels, the vehicle may be fitted with a USB connection in the stowage compartment in the centre console. ⇒ Booklet *Owner's Manual*, chapter *Practical equipment*.

Only supported audio files are displayed and played. Other files are ignored.

Playback starts automatically if supported audio files are stored on the data storage device.

Removing

The connected storage device **must** be prepared before removal.

- In the *MEDIA* main menu, touch the [⚙] function button to open the **Media setup** menu.
- **OR**: press the [SETUP] infotainment button.
- Touch the [Remove safely] function button and then select [USB].

Data media cannot be read

The message **No playable files available** appears if the data on the connected storage device cannot be read. ▶

CONFIDENTIAL
not for distribution

Please read and observe the manufacturer's manual for the external storage device. ◁

External audio source connected to the AUX-IN socket

Fig. 21 MEDIA main menu

Fig. 22 External audio source connected to AUX-IN

First read and observe the safety warnings ⚠ on page 3 and the introductory information on page 20.

The AUX-IN socket ⇒ Fig. 1 ⑥ can only be used with a 3.5 mm jack plug.

The connected external audio source is played over the vehicle speakers and **cannot** be controlled via the infotainment system.

AUX shows on the screen when an external audio source is connected ⇒ Fig. 22.

Connecting an external audio source to the AUX-IN socket

- Reduce the base volume on the infotainment system.
- Connect the external audio source to the AUX-IN socket.
- Start playback on the external audio source.
- In the *MEDIA* main menu, touch the ⇒ Fig. 21 ① function button and select AUX.

The **output volume** of the external audio source should be adjusted to the volume of the other audio sources ⇒ page 42.

Information on operating an external audio source connected to the AUX-IN socket

Action	Effect
Selecting another audio source on the infotainment system.	The external audio source continues to run in the background.
Stopping playback on the external audio source.	The infotainment system remains in the **AUX** menu.
Disconnecting the plug from the AUX-IN socket.	The infotainment system switches to playback of the most recently played audio source.

Please read and observe the manufacturer's manual for the external audio source.

Interference may occur if the external audio source is powered from the vehicle's 12-volt socket. ◁

CONFIDENTIAL not for distribution

Connecting an external audio source via Bluetooth®

Fig. 23 MEDIA main menu

First read and observe the safety warnings ⚠ on page 3 and the introductory information on page 20.

In Bluetooth® audio mode, audio files from a Bluetooth® audio source (e.g. mobile telephone) that is connected via Bluetooth® can be played over the vehicle loudspeakers (Bluetooth® audio playback).

Conditions

- The Bluetooth® audio source must support the A2DP Bluetooth® profile.
- The [☑ Bluetooth audio (A2DP/AVRCP)] function must be activated in the **`Bluetooth setup`** menu ⇒ page 39.

Starting Bluetooth® audio transfer

- Switch on Bluetooth® visibility on the external Bluetooth® audio source (e.g. mobile telephone).
- Reduce the base volume on the infotainment system.
- Press the [MEDIA] infotainment button.
- Touch the ⇒ Fig. 23 ① function button and select [BT audio].
- Touch the [Find devices] function button to connect an external Bluetooth® audio source for the first time.
- **OR:** touch the [Paired devices] function button to select an external Bluetooth® audio source from the list.
- Continue the process by following the prompts on the infotainment system screen and in the display on the Bluetooth® audio source.

You may then have to start playback on the Bluetooth® audio source manually.

When playback on the Bluetooth® audio source is stopped, the infotainment system remains in Bluetooth® audio mode.

Controlling playback

The extent to which the Bluetooth® audio source can be controlled via the infotainment system varies depending on what Bluetooth® audio source is connected.

With media players that support the AVRCP Bluetooth® profile, playback on the Bluetooth® audio source can be automatically started or stopped when the unit is switched to Bluetooth® audio mode or to a different audio source. In addition, track display or track change is possible via the infotainment system.

Due to the large number of possible Bluetooth® audio sources, it is not possible to guarantee fault-free operation of all described functions.

Always switch off the warning and service tones on a connected Bluetooth® audio source, e.g. key tones on a mobile telephone, to prevent interference noise and malfunctions. ◁

Media settings

First read and observe the safety warnings ⚠ on page 3 and the introductory information on page 20.

- Select the *MEDIA* main menu by pressing the [MEDIA] infotainment button.
- Touch the [⚙] function button to open the **`Media setup`** menu.

Function button: effect
[Remove the SD card safely]: memory card is ejected from the system and can then be safely removed ⇒ page 26.
[Sound]: sound settings ⇒ page 42.
[Bluetooth]: opens the **`Bluetooth setup`** menu ⇒ page 39. ▶

CONFIDENTIAL not for distribution

Function button: effect
☑ Traffic program (TP): the TP function (traffic news monitoring) is activated ⇒ page 12.
☑ Mix/Repeat including subfolders: subfolders will be included in the selected playback mode ⇒ page 22.
Remove safely: disconnect data storage device (USB storage device or SD card) from the system. Once the storage device has been ejected from the system the respective function button is greyed out. ◁

CONFIDENTIAL
not for distribution

142.5R6.RCT.20

Telephone control (PHONE)

Introduction to telephone control system

Introduction

This chapter contains information on the following subjects:

General information 31
Areas where special regulations apply 31
Bluetooth® 31
Pairing and connecting mobile telephone on the infotainment system 32
Switching telephone control system off 33

The telephone functions described in the following section can be controlled via the infotainment system if a mobile telephone that is switched on is paired and connected with the infotainment system.

The mobile telephone must support the **Bluetooth® function** otherwise a connection cannot be made between the telephone and the infotainment system.

If a mobile telephone is not connected to the infotainment system, the telephone control system cannot be used.

Observe the notes on using a mobile telephone in the vehicle without a connection to the external aerial ⇒ Booklet *Owner's manual*.

Additional information and warnings:

- Safety information ⚠ for infotainment system ⇒ page 3
- Overview of the control elements ⇒ page 6
- Basic information on use ⇒ page 7

⚠ WARNING

Making telephone calls and operating the telephone control system while the vehicle is in motion can distract you from the road and lead to accidents.

- **Always drive carefully and responsibly.**
- **Select volume settings that allow signals from outside the vehicle (such as emergency services sirens) to be easily heard at all times.**
- **Your call may be cut off or you may be unable to make calls if you are in an area with no mobile telephone network coverage, an**

⚠ WARNING (Continued)

area where the network is very weak or, in some cases, in a tunnel, garage or underpass. This also means that no emergency calls can be made.

⚠ WARNING

If a mobile telephone is not secured or is incorrectly secured in the vehicle, it could be flung though the interior during a sudden driving or braking manoeuvre, or in the event of an accident. This can cause injuries.

- **While the vehicle is in motion, always secure the mobile telephone properly outside the airbag deployment area.**

⚠ WARNING

Carrying a mobile telephone that is switched on just next to a pacemaker may cause the pacemaker to malfunction.

- **Maintain a gap of approximately 20 centimetres between the aerials of the mobile telephone and the pacemaker, as mobile telephones may affect the functioning of pacemakers.**
- **Do not carry a mobile telephone in your breast pocket above your pacemaker when the telephone is switched on or in standby mode.**
- **If you suspect interference, switch off the mobile telephone immediately.**

⚠ WARNING

The centre armrest may obstruct the driver's arm movements if raised, which could cause accidents and severe injuries.

- **Always keep the armrest down while the vehicle is in motion.**

NOTICE

High speeds, poor weather and poor road conditions as well as the network quality may impair telephone calls in the vehicle. ◁

CONFIDENTIAL not for distribution

General information

First read and observe the introductory information and safety warnings ⚠ on page 30.

How the individual telephone menus are displayed depends on the mobile telephone being used. There may be differences.

Observe the notes on using a mobile telephone in the vehicle without a connection to the external aerial ⇒ Booklet *Owner's manual*, chapter *Vehicle care and maintenance*.

Use compatible Bluetooth® devices only. Information on compatible Bluetooth® products is available from your Volkswagen dealership or online.

Follow the operating manual for your mobile telephone and the instructions provided by the accessory manufacturer.

You may experience poor reception or may be cut off in areas where the signal is weak.

Most electronic devices are shielded against high-frequency signals. In rare cases, however, electronic devices may not be shielded against high-frequency signals emitted by the telephone control system. This can cause interference.

There may be restrictions on the use of Bluetooth® devices in some countries. Information is available from the local authorities.

When connecting the telephone control system with a device using Bluetooth®, read the device's operating manual for detailed safety information. Use compatible Bluetooth® products only. ◁

Areas where special regulations apply

First read and observe the introductory information and safety warnings ⚠ on page 30.

Switch off the mobile telephone and mobile telephone provision in areas with a risk of explosion. These areas are often clearly marked, but not always ⇒ ⚠ in *Introduction* on page 30. They include, for example:

- Areas immediately around chemical pipelines and tanks.
- Lower decks of ships and ferries.
- The area around vehicles which run on liquid gas (such as propane or butane).
- Places where there are chemicals or particles such as flour, dust and metal powder in the air.
- All other places where the vehicle engine must be switched off.

⚠ WARNING

Switch off the mobile telephone in areas with a risk of explosion!

NOTICE

Your mobile telephone must always be switched off in areas where special regulations apply and when the use of mobile telephones is forbidden. The radiation produced by the mobile telephone when switched on may interfere with sensitive technical and medical equipment, possibly resulting in malfunction or damage to the equipment. ◁

Bluetooth®

First read and observe the introductory information and safety warnings ⚠ on page 30.

Bluetooth®

Bluetooth® technology is used to connect a mobile telephone to the telephone control system fitted in a vehicle. A pairing process has to be carried out before the telephone control system can be used with a Bluetooth® mobile telephone. ▶

CONFIDENTIAL not for distribution

Some Bluetooth® mobile telephones are detected and connected automatically when the ignition is switched on, if a connection already exists. For this to happen, the mobile telephone itself and the Bluetooth® function in the telephone must be switched on and all active Bluetooth® connections to other units must be disconnected.

The Bluetooth® connection is free of charge.

Bluetooth® is a registered trademark of Bluetooth® SIG, Inc.

Bluetooth® profiles

When a mobile telephone is connected to the telephone control system, data is exchanged via one of the Bluetooth® profiles.

Basic telephony Bluetooth® Hands-Free Profile (**HFP**):

- If a mobile telephone is connected via HFP to the telephone control system, you can make calls wirelessly via the hands-free system. The vehicle's exterior aerial *cannot* be used with this. Observe the notes on using a mobile telephone in the vehicle without a connection to the external aerial ⇒ Booklet *Owner's manual*.

Music playback Bluetooth® Advanced Audio Distribution Profile (**A2DP**):

- Bluetooth® profile for the transmission of stereo-quality audio signals.

Playback controls Bluetooth® Audio Video Remote Control Profile (**AVRCP**):

- Bluetooth® profile for displaying track information and control of playback in the mobile device. ◁

Pairing and connecting mobile telephone on the infotainment system

First read and observe the introductory information and safety warnings ⚠ on page 30.

In order to operate a mobile telephone via the infotainment system, a **single** pairing process is required for both devices.

Pairing should only be performed when the vehicle is stationary.

Conditions

- Ignition is switched on.
- If necessary, disconnect any headsets from the mobile telephone.
- The **Bluetooth® function** must be activated or set to visible on the mobile telephone and on the infotainment system.
- The **keypad lock** on the mobile telephone has to be unlocked.

Follow the operating manual for the mobile telephone.

The **Bluetooth® function** is set to visible on the infotainment system for about 3 minutes after the ignition is switched on.

Entries have to be made on the mobile telephone keypad during the pairing process. The mobile telephone has to be at hand for this.

Starting mobile telephone pairing

- Press the PHONE infotainment button.
- Touch the Find telephone function button.

OR:

- Press the PHONE infotainment button.
- Touch the Setup function button.
- Touch the Select telephone function button and then Find telephone.

Once the search process is complete, the names of all Bluetooth® devices found will be displayed on the screen.

- Select the mobile telephone to be paired from this list of Bluetooth® devices and then select `Hands-free telephone (HFP)`.

The infotainment system and the mobile telephone are now connected. Further input may be required on the mobile telephone and on the infotainment system to conclude the connection process. ▶

CONFIDENTIAL not for distribution

- If necessary, confirm the pairing on the mobile telephone.

Depends on the mobile telephone:

- Enter the PIN code that is then displayed on the infotainment system into the mobile telephone and confirm it.

OR:

- Compare the PIN code displayed on the infotainment system with the PIN code displayed on the mobile telephone. If the PIN code matches, it has to be confirmed on **both** devices.

The *PHONE* main menu is displayed and the telephone book and the call lists stored in the mobile telephone are loaded automatically once pairing has been completed. The time taken by the loading process varies depending on the amount of data stored in the mobile telephone. This data is available on the infotainment system once the loading process is completed.

Pairing and connecting mobile telephones

Several mobile telephones can be paired with the infotainment system, but only **one** mobile telephone can be connected to the infotainment system at a time.

When you switch the infotainment system on, a connection is automatically set up with the mobile telephone that was connected last. If no connection can be set up with this mobile telephone, the telephone control system automatically attempts to set up a connection with the next mobile telephone in the list of paired devices.

Bluetooth® connections have a **maximum** range of **10 metres**. Any active Bluetooth® connection is interrupted when this distance is exceeded. The connection is **automatically** restored as soon as the device enters the Bluetooth® range.

You will find further information on pairing and connecting mobile telephones on the Internet at www.volkswagen.com. ◁

Switching telephone control system off

First read and observe the introductory information and safety warnings ⚠ on page 30.

- Switch off the ignition.
- Remove the vehicle key from the ignition lock.

The telephone control system is switched off and any active call is transferred to the mobile telephone.

The telephone control system is **not** switched off if the vehicle key is left in the ignition lock after the engine is switched off. Once a set time has expired, a message appears on the infotainment system screen informing you that the telephone control system will be switched off automatically. An active call will be transferred to the mobile telephone.

The transfer of an active call from the telephone control system to the mobile telephone can take up to approximately 10 seconds (depending on the mobile telephone being used). ◁

CONFIDENTIAL
not for distribution

Description of telephone control system

Introduction

This chapter contains information on the following subjects:

PHONE main menu 34
During a telephone call 35
Entering a telephone number 36
Telephone book menu (Contacts) 36
Call lists menu 37
Speed dial buttons 38
Telephone settings 38
Bluetooth settings® 39
User profile settings 39

Some functions and settings are only available when the vehicle is stationary, and are not supported by all mobile telephones.

The range of possible settings depends on the country, the unit and the vehicle's equipment specification.

Up to 20 devices can be linked to the telephone control system. One device at a time can be connected via the hands-free profile (HFP) or audio playback profile (A2DP) ⇒ page 33.

Additional information and warnings:

- Safety information ⚠ for infotainment system ⇒ page 3
- Overview of the control elements ⇒ page 6
- Basic information on use ⇒ page 7
- Introduction to and safety information ⚠ for telephone control system ⇒ page 30

Using a mobile telephone in the vehicle may cause noise from the vehicle speakers.

Some networks might not support all language-dependent characters and services. ◁

PHONE main menu

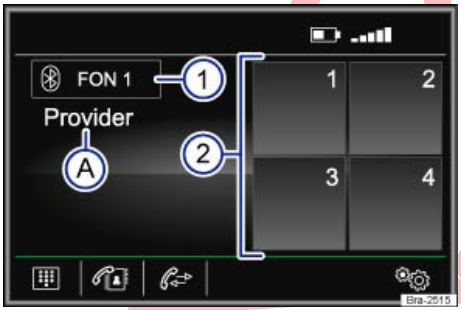

Fig. 24 PHONE main menu

Fig. 25 Incoming call

First read and observe the introductory information given on page 34.

Assignment to a user profile

Telephone book data, call lists and stored speed dial buttons are assigned to a user profile and stored in the telephone control system. They are available when the mobile phone is connected with the telephone control system again.

If, while connected to the radio, telephone book entries on the mobile telephone are changed, you can start a manual update of the telephone book data via the `User profile setup` menu ⇒ page 39. The telephone book will be automatically updated when the telephone is connected again (e.g. on the next journey).

A **maximum of 4 user profiles** can be stored for mobile telephones in the telephone control system. If another mobile telephone is connected, the user profile which has not been used for the longest amount of time will be deleted automatically.

Telephone control function buttons

- Press the PHONE infotainment button to open the *PHONE* main menu. ▶

CONFIDENTIAL not for distribution

Function button: effect	
①	Name of the paired mobile telephone or the user profile in use. Touch to connect or pair another mobile telephone.
②	Speed dial buttons which can be used to store one telephone number from the telephone book each ⇒ page 38.
	Opens the keypad to enter a telephone number ⇒ page 36.
	Opens the telephone book in the paired mobile telephone ⇒ page 36.
	Opens the call lists in the paired mobile telephone ⇒ page 37.
	Opens the `Telephone setup` menu ⇒ page 38.
	Touch to **accept** a call.
	Touch to **end** a call. **OR:** touch to **reject** an incoming call.
	Touch to mute the ring tone during a call or to switch the mute off.

Telephone control displays and symbols

Display: meaning	
Ⓐ	The name of the mobile telephone network provider where the inserted SIM card or the SIM card of the paired mobile telephone is registered.
Ⓑ	Displays the telephone number or the stored name.
	The charge level of the paired mobile telephone.
	The signal strength of the current mobile telephone transmitter station. ◁

During a telephone call

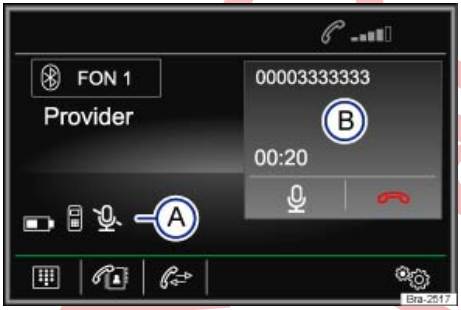

Fig. 26 During a telephone call

First read and observe the introductory information given on page 34.

When a connection is made to a dialled telephone number, the *PHONE* main menu changes to the *telephone call* view ⇒ Fig. 26.

Displays and function buttons: action and effect	
[a)]	Touch to make the call on the mobile telephone provision.
	Touch to switch off the microphone in the mobile telephone provision during a call (function button changes to). The conversation in the vehicle cannot be heard at the other end. appears on the display Ⓐ. Touch the function button to switch on the microphone in the mobile telephone provision again.
	Touch to end a call. ▶

CONFIDENTIAL
not for distribution

Displays and function buttons: action and effect	
Ⓐ	: call is being made with the connected mobile telephone. Touch the function button to make the call on the mobile telephone provision. : the microphone in the provision for mobile telephone is switched off. : charge level of the paired mobile telephone.
Ⓑ	Display of call duration and telephone number or the stored name.

a) This function button is only displayed when the call is made on the mobile telephone. ◁

Entering a telephone number

Fig. 27 Entering a telephone number

First read and observe the introductory information given on page 34.

In the *PHONE* main menu, press the function button.

Possible functions

Entering a telephone number	Enter the telephone number on the keypad. Touch the function button to dial the number.
Selecting a contact from a list	Enter the first letters of the required contact on the keypad. Possible entries appear in the contact list. Browse through the contact list and touch the desired contact to make the call. ◁

Telephone book menu (Contacts)

Fig. 28 Contacts menu

Fig. 29 Search window

First read and observe the introductory information given on page 34. ▶

CONFIDENTIAL
no distribution

It may take a few minutes after the first pairing process until the telephone book data[1)] from the paired mobile telephone is available on the infotainment system. The process could take up to an hour, depending on the amount of data to be transferred. If necessary, confirm the transfer on the mobile telephone.

The telephone book can also be opened during an on-going telephone call.

In the *PHONE* main menu, press the function button.

Possible functions

Selecting a contact from a list	Browse through the list and touch the desired contact to make the call. **OR:** if several numbers are allocated to the same contact, first touch the contact and then the desired number to make the call.
Finding a contact in the search window	Touch the ⇒ Fig. 28 function button to open the search window. Enter the name you are looking for in the search window ⇒ Fig. 29. The number of matching results is displayed to the right of the entry field. Touch the function button to go to the list view. Browse through the list and touch the desired contact to make the call.

Availability of telephone book menu depends on the mobile telephone being used. ◁

Call lists menu

Fig. 30 Call list menu

First read and observe the introductory information given on page 34.

- In the *PHONE* main menu, press the function button.
- Touch the ... ▽ ⇒ Fig. 30 (1) function button.
- Select the desired call list: All, Missed calls, Dialled numbers or Received calls.

If a telephone number is already stored in the telephone book, the stored name is displayed in the call list instead of the telephone number.

Possible displays in the call menu

Display	Meaning
	Missed calls: shows telephone numbers of missed and unanswered calls.
	Dialled numbers: shows telephone numbers that were dialled on the mobile telephone and the infotainment system telephone control system.
	Received calls: shows all telephone numbers that were received on the mobile telephone and on the infotainment system via the telephone control system.

Availability of call lists depends on the mobile telephone being used. ◁

1) Depending on what device is used, only contacts from the telephone memory may be loaded.

CONFIDENTIAL
not for distribution

Speed dial buttons

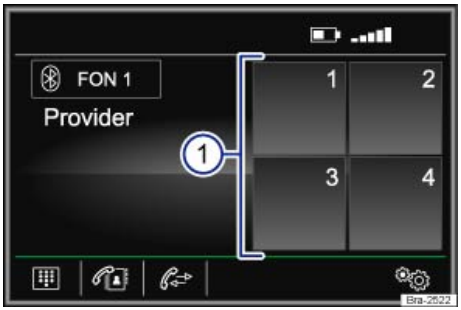

Fig. 31 PHONE main menu

First read and observe the introductory information given on page 34.

One telephone number from the telephone book can be stored to each of the speed dial buttons ⇒ Fig. 31 ①.

All speed dial buttons must be assigned manually and are then specific to a user profile.

Possible functions

Assigning speed dial buttons	In the *PHONE* main menu, touch a **free** speed dial button. Select the desired contact from the list. If several telephone numbers are stored for the selected contact, select the desired number.
Editing assigned speed dial buttons	In the *PHONE* main menu, *press and hold* an **assigned** speed dial button until the *Contacts* menu opens. Select the desired contact from the list. If several telephone numbers are stored for the selected contact, select the desired number. To close the *Contacts* menu without applying changes, touch the [⇦] function button.
Deleting assigned speed dial buttons	Any telephone number stored on a speed dial button can be deleted in the **`User profile setup`** menu ⇒ page 39.
Dialling with speed dial buttons	In the *PHONE* main menu, *briefly touch* an **assigned** speed dial button to dial the telephone number stored to that button.

Contacts stored to the speed dial buttons are not updated automatically. If a contact stored to a speed dial button is modified on the mobile telephone, the speed dial button must be assigned again. ◁

Telephone settings

First read and observe the introductory information given on page 34.

In the *PHONE* main menu, touch the [Setup] function button.

Function button: effect
[☑ Hands-free][a]: the hands-free function is activated. Touch the function button during a telephone call to make the call on the mobile telephone.
[Select telephone]: select the mobile telephone from the list view to connect it to the infotainment system. [Find telephone]: touch to connect a new mobile telephone.
[Bluetooth]: opens the **`Bluetooth setup`** menu ⇒ page 39.

▶

CONFIDENTIAL
not for distribution

Function button: effect
User profile: opens the **User profile setup** menu ⇒page 39.
Select ring tone[b]: select the ring tone from the list of preset ring tones. The selected ring tone is played and stored when you leave the submenu.

a) This function button is only active during a telephone call.

b) Either the selected ring tone or the ring tone set in the mobile phone is sounded, depending on what mobile phone is being used. ◁

Bluetooth settings®

First read and observe the introductory information given on page 34.

In the *PHONE* main menu, touch the Setup function button and then Bluetooth.

Function button: effect
☑ Bluetooth: touch to switch Bluetooth® off. All existing connections are ended.
Visibility: switch Bluetooth® visibility on and off. Visible: Bluetooth® visibility is activated. Not visible: Bluetooth® visibility is deactivated. The Bluetooth® visibility has to be switched on before a Bluetooth® device can be externally paired with the infotainment system. Upon start: Bluetooth® visibility is deactivated approximately 3 minutes after the engine is started.
Name: to display or edit the device name. This name is displayed to other Bluetooth® devices in their Bluetooth® settings.
Paired devices: displays paired devices. Separating and connecting individual Bluetooth® devices and Bluetooth® profiles.
Find devices: finds Bluetooth® devices that are set to visible and are within the range of the infotainment system. The **maximum range** is approximately **10 metres**.
☑ Bluetooth audio (A2DP/AVRCP): this function must be activated if you want to connect an external audio source to the infotainment system via Bluetooth®⇒page 28.

◁

User profile settings

First read and observe the introductory information given on page 34.

In the *PHONE* main menu, touch the Setup function button and then User profile.

Function button: effect
Manage favourites: to edit speed dial buttons. **Assigned speed dial button**: touch to delete the stored number. **Unassigned speed dial button**: touch to store a number from the address book to the speed dial button.
Sort by: set the sorting order for telephone book entries (**Last name** or **First name**).
Import contacts: touch to import the address book from the connected telephone or to update the previously imported address book.
Delete other profiles: to delete individual or all non-active user profiles.

◁

CONFIDENTIAL not for distribution

Settings

Menu and system settings (SETUP)

Introduction

This chapter contains information on the following subjects:

System settings main menu (Setup) 40

The range of possible settings depends on the country, the unit and the vehicle's equipment specification.

Additional information and warnings:

- Safety information ⚠ for infotainment system ⇒page 3
- Overview of the control elements ⇒page 6
- Basic information on use ⇒page 7 ◁

System settings main menu (Setup)

First read and observe the introductory information given on page 40.

- Press the SETUP infotainment button to open the **`System setup`** main menu.
- To adjust the settings for a certain function, touch the appropriate function button.

Function button: effect
Remove the SD card safely: ejects the memory card from the system. Once the memory card has been ejected from the system the function button is greyed out.
Sound: make sound and volume settings ⇒page 42.
Screen: make screen settings. ☐ Display off (in 10 s): when this function is activated, the screen switches off if no button is pressed on the infotainment system for about ten seconds. The screen is switched back on by touching the screen or pressing an infotainment button. Brightness: select the brightness of the screen. ☑ Confirmation tone: activates the confirmation tone that sounds when a function button is touched. ☑ Show clock in standby mode: the screen shows the current time when the infotainment system is in standby mode.
Time and date: set the time and date. Time: to set the current time. Time format: select the format for the time display (12 or 24-hour). ☑ Summer (DST): summer time is activated. Date: set the current date. Date format: to select the format for the date display (**`DD.MM.YY`**, **`YY-MM-DD`** or **`MM-DD-YY`**).
Language: select the desired language for text and voice output.
Keypad: select the required layout (alphabetical or keyboard layout).
More keypad languages: select additional keypad languages.
Units: sets units of measurement for displays in the vehicle. **`Distance`**, **`Speed`**, **`Temperature`**, **`Volume`**, **`Consumption`** and **`Pressure`**.
Bluetooth: make settings relating to Bluetooth® ⇒page 39.
Remove safely: disconnect data storage device (USB storage device or SD card) from the system. Once the storage device has been ejected from the system the respective function button is greyed out. ▶

CONFIDENTIAL
not for distribution

Function button: effect
Factory settings: restoring the factory settings will **erase entered data and settings** depending on which option has been selected.
System information: displays the system information (serial number, hardware and software versions).
Copyright: copyright information.

It is important that the correct date and time are set in the vehicle to ensure the infotainment system works properly. ◁

CONFIDENTIAL
not for distribution

Sound and volume settings

Introduction

This chapter contains information on the following subjects:

Adjusting settings 42

The range of possible settings depends on the country, the unit and the vehicle's equipment specification.

Additional information and warnings:

- Safety information ⚠ for infotainment system ⇒page 3
- Overview of the control elements ⇒page 6
- Basic information on use ⇒page 7 ◁

Adjusting settings

First read and observe the introductory information given on page 42.

Changes are automatically stored when a menu is closed.

- Press the SOUND infotainment button.
- **OR:** press the SETUP infotainment button and then select Sound to open the **Sound setup** main menu.
- To adjust the settings for a certain function, touch the appropriate function button.

Function button: effect
Bass - Mid- Treble: sets the tonal quality (Bass - Mid - Treble).
Balance or Balance - Fader: set the sound focus. The crosshair shows the where the sound is currently focused in the car's interior. To move the sound focus, touch the required position on the interior view or use the arrow buttons to change the position. To place the focus of sound at the centre of the interior view, touch the function button between the arrows.
Volume: to make volume settings. Max. switch-on volume: define the maximum volume at switch-on. Announcements: to set the output volume for announcements (e.g. traffic announcements). Speed-dep. vol. (GALA): define the scope of the speed-dependent volume control. The audio volume is automatically increased as the vehicle speed increases. Audio lower.: set how much the volume of the infotainment system should be reduced by when the ParkPilot is active. AUX volume: to set the output volume for audio sources that are connected via the AUX-IN multimedia socket (**Quiet**, **Medium** or **Loud**). Please also refer to ⇒page 42, *Adjusting playback volume of external audio sources*. BT audio: to set the output volume for audio sources connected via Bluetooth® (**quiet**, **medium** or **loud**). Please also refer to ⇒page 42, *Adjusting playback volume of external audio sources*.
☑ Confirmation tone: activates the confirmation tone that sounds when a function button is touched.

Adjusting playback volume of external audio sources

If you need to increase the output volume of an external audio source, first lower the base volume on the infotainment system.

If the sound from the external audio source is **too quiet**, increase the **output volume** on the external audio source if possible. If this is not sufficient, set the **input volume** to **Medium** or **Loud**. ▶

CONFIDENTIAL not for distribution

If the sound from the connected external audio source is **too loud or distorted**, lower the **output volume** on the external audio source if possible. If this is not sufficient, set the **input volume** to **`Medium`** or **`Quiet`**. ◁

CONFIDENTIAL
not for distribution

142.5R6.RCT.20

Abbreviations

Abbreviation	Definition
A2DP	Generic technology for the transmission of audio signals via Bluetooth® (Advanced Audio Distribution Profile).
AM	Amplitude modulation (medium wave, MW).
AUX-IN	Auxiliary audio input.
AVRCP	Universal technology for remote control of audio sources via Bluetooth® (Audio Video Remote Control Profile).
DIN	German Standards Authority (Deutsches Institut für Normung).
DRM	Digital rights management.
EON	Supporting of other networks (enhanced other network).
FM	Frequency modulation (very high frequency, VHF).
HFP	Wireless telephony (hands-free profile).
MP3	Format for compressing audio files.
RDS	Radio data system.
TP	Traffic news function (traffic program).
VBR	Variable bit rate.
WMA	Format for compressing audio files.

CONFIDENTIAL
not for distribution

Index

A

AM 12
Areas where special regulations apply 31
AUX-IN 27
AUX-IN socket 27
External audio sources 27
Selecting 23
AUX-IN socket 27

B

Base volume 8
Adjusting 8
Muting 8
Bluetooth
Profiles 31
Settings 39
Bluetooth audio 28
Browsing lists 9
BT audio 28
Buttons 8
Infotainment system 6

C

Call lists 37
CD
Cannot be read 25
Ejecting 25
Faulty 25
Inserting 25
Mode 25
Selecting 23
Checkboxes 8
Control elements (infotainment system) 6
Copyright 20
Information 41
Cursor 10

D

Dialling a number 36
During a telephone call 35

E

Eject
see CD 25
EON 17, 44
Explosion risk areas
Telephone 31
External audio sources 27
Adjusting playback volume 42
BT audio 28
External data storage device
USB 26

F

Factory settings 40
FM 12, 44
Frequency band
AM 12
Changing 12
FM 12
Selecting 12
Function buttons 8
MEDIA main menu 22
Operating 8
Radio main menu 12
Function buttons (soft keys)
PHONE main menu 34

G

GALA 42

H

Hard keys 7
Hard keys (infotainment system) 6

I

Ignition off
Switch-off delay (timeout) 7
Infotainment buttons 6, 7
Input window 10
Interference from a mobile telephone 7
Introduction 3

K

Keypad 10

M

Main menu
MEDIA 22
PHONE 34
RADIO 12
Settings (SETUP) 40
Sound 42
MEDIA
AUX-IN socket 27
Bit rate 20

CONFIDENTIAL
not for distribution

Bluetooth audio 28
CD audio data 20
CD cannot be read 25
CD faulty 25
CD mode 25
Changing media source 23
Changing tracks 24
Copyright 20
Displays 22
Displays and symbols 23
Ejecting a CD 25
External data storage device connected to USB port 26
Fast forward 24
Fast reverse 24
Function buttons 22
Inserting a CD 25
Inserting memory card 26
Main menu 22
Media mode 20
Media source selection menu 23
Memory card cannot be read 26
MP3 files 20
Playback modes 22
Playing order 21
Playlists 21
Preparing for removal 26
Random play (Mix) 22
Removing memory card 26
Repeat function (Repeat) 22
Requirements 20
Restrictions 21
Scan function (SCAN) 22
Selecting storage devices 23
Selecting track 24
Settings 28
Track information 23
Track list 24
WMA files 20

Media sources 23
AUX-IN 23
CD 23
Memory card 23
Selecting 23

Memory card
Cannot be read 26
Inserting 26
Preparing memory card for removal 26
Removing 26
Selecting 23

Muting 8

N

Numbers
Dialling 36

O

On-screen keypad 10

Operation
Additional display information 11
Adjusting the volume 8
Browsing lists 9
Checkboxes 8
Entries 10
Function buttons 8
Infotainment buttons 7
Input window 10
Muting 8
On-screen keypad 10
PHONE 30, 34
RADIO 12
Rotary/push knobs 7
Scrolling 9
Slider 9
Switching on and off 7
Touchscreen 8

P

PHONE
A2DP 31
Areas where special regulations apply . . . 31
Bluetooth profiles 31
Bluetooth settings 39
Call lists 37
Connecting via infotainment system 32
Contacts 36
Description of functions 31
Dialling 36
Displays and symbols 35
During a telephone call 35
Entering telephone number 36
Explosion risk areas 31
Function buttons 34
General information 31
HFP 31
Main menu 34
Mobile telephone pairing 32
Pairing via infotainment system 32
Settings 38
Speed dial buttons 38
Telephone book 36
Telephone control 30
Telephone control system 34
User profile settings 39

Playback
AUX-IN 27
CD 25
External data storage device (USB) 26
MEDIA 22
Memory card 22
RADIO 12
Track 24

CONFIDENTIAL
not for distribution

Pop-up windows 8

Q

Quick reference guide 3

R

RADIO 12
AM settings 18
Display of station names 13
Displays and symbols 13
EON 17
FM settings 18
Frequency change 12
Function buttons 12
Main menu 12
Radio mode 12
Radio text 16
RDS 13
Scan function (SCAN) 16
Selecting stations 14
Settings 18
Setting station frequency 14
Setting stations 14
Station buttons 14
Station list 14
Station tracking via RDS 13
Stopping station name scrolling 16
Storing stations 14
TP (traffic program) 17
Traffic announcement (INFO) 17
Traffic news 17
Radio text (RDS) 16
Random play (Mix) 22
RDS 13
Automatic station tracking 13
Radio text 16
RDS Regional 13
TP (traffic program) 17
Repeat 22
Repeat function (Repeat) 22
Requirements for
CDs 20
memory cards 20
Rotary/push knobs 7
Rotary/push knobs (infotainment system) . . 6

S

Safety information
Infotainment system 3
SCAN
Media 22
Radio 16
Scan function (SCAN)
MEDIA 22
RADIO 16
Screen
Operating 8
Screen (infotainment system) 6
Scrolling 9
SD card
see Memory card 26
Setting date 40
Settings
AM 18
Bluetooth 39
Defaults 40
Factory settings 40
FM 18
Main menu 40
Media 28
Menu and system settings 40
PHONE 38
Radio 18
Sound 42
System 40
User profile 39
Volumes 42
Setting time 40
SETUP
see Settings 40
Slider 9
Soft keys
Infotainment system 8
MEDIA main menu 22
Radio main menu 12
Sound focus (balance, fader) 42
Sound settings (treble, bass) 42
Speed-dependent volume 42
Speed dial buttons 38
Station buttons 14
Station names 13
Stations
Scan function (SCAN) 16
Selecting 14
Setting 14
Stopping station name scrolling 16
Storing 14
Station search 16
Station tracking 13
Switch-off delay (timeout) 7
Switching off 7
Switching on 7

T

Telephone control
see PHONE 30

CONFIDENTIAL
not for distribution

142.5R6.RCT.20

Telephone control system (PHONE)
Switching off 33
Text input 10
Things to note
AUX operation 27
Displays 11
Volume reduction 7
Timeout 7
Touchscreen (infotainment system) 6
TP (traffic program)
EON 17
Switching on and off 17
Traffic announcement (INFO) 17
Track list 24
Traffic announcement (INFO) 17
Traffic news
see TP (traffic program) 17

U

Unit buttons 7
USB
Connecting an external data storage device . 26
Disconnecting 26
Not readable 26
User profile
Settings 39

V

VHF
see FM 44
Volume
Adjusting 8
Base volume 8
Determining for external audio sources . . . 42
Speed-dependent volume increase (GALA) . 42
Traffic announcements 42
Volume distribution (balance, fader) 42
Volume reduction 7

FCC Information to User

This equipment has been tested and found to comply with the limits for a Class B digital device, pursuant to Part 15 of the FCC Rules. These limits are designed to provide reasonable protection against harmful interference in a residential installation. This equipment generates, uses and can radiate radio frequency energy and, if not installed and used in accordance with the instructions, may cause harmful interference to radio communications. However, there is no guarantee that interference will not occur in a particular installation. If this equipment does cause harmful interference to radio or television reception, which can be determined by turning the equipment off and on, the user is encouraged to try to correct the interference by one of the following measures:

• Reorient or relocate the receiving antenna.
• Increase the separation between the equipment and receiver.
• Connect the equipment into an outlet on a circuit different from that to which the receiver is con-nected.
• Consult the dealer or an experienced radio/TV technician for help.

Caution

Modifications not expressly approved by the party responsible for compliance could void the user’s authority to operate the equipment.

FCC Compliance Information : This device complies with Part 15 of the FCC Rules. Operation is subject to the following two conditions: (1) This device may not cause harmful interference, and (2) this device must accept any interference received, including interference that may cause undesired operation

CONFIDENTIAL
not for distribution