EM060K-GL&EM120K-GL
Hardware Design

LTE-A Module Series

Version: 1.0.0

Date: 2021-04-15

Status: Preliminary

At Quectel, our aim is to provide timely and comprehensive services to our customers. If you require any assistance, please contact our headquarters:

Quectel Wireless Solutions Co., Ltd.
Building 5, Shanghai Business Park Phase III (Area B), No.1016 Tianlin Road, Minhang District, Shanghai 200233, China
Tel: +86 21 5108 6236
Email: info@quectel.com

Or our local offices. For more information, please visit:
http://www.quectel.com/support/sales.htm.

For technical support, or to report documentation errors, please visit:
http://www.quectel.com/support/technical.htm.
Or email us at: support@quectel.com.

Legal Notices

We offer information as a service to you. The provided information is based on your requirements and we make every effort to ensure its quality. You agree that you are responsible for using independent analysis and evaluation in designing intended products, and we provide reference designs for illustrative purposes only. Before using any hardware, software or service guided by this document, please read this notice carefully. Even though we employ commercially reasonable efforts to provide the best possible experience, you hereby acknowledge and agree that this document and related services hereunder are provided to you on an “as available” basis. We may revise or restate this document from time to time at our sole discretion without any prior notice to you.

Use and Disclosure Restrictions

License Agreements

Documents and information provided by us shall be kept confidential, unless specific permission is granted. They shall not be accessed or used for any purpose except as expressly provided herein.

Copyright

Our and third-party products hereunder may contain copyrighted material. Such copyrighted material shall not be copied, reproduced, distributed, merged, published, translated, or modified without prior written consent. We and the third party have exclusive rights over copyrighted material. No license shall be granted or conveyed under any patents, copyrights, trademarks, or service mark rights. To avoid ambiguities, purchasing in any form cannot be deemed as granting a license other than the normal non-exclusive, royalty-free license to use the material. We reserve the right to take legal action for noncompliance with abovementioned requirements, unauthorized use, or other illegal or malicious use of the material.

Trademarks

Except as otherwise set forth herein, nothing in this document shall be construed as conferring any rights to use any trademark, trade name or name, abbreviation, or counterfeit product thereof owned by Quectel or any third party in advertising, publicity, or other aspects.

Third-Party Rights

This document may refer to hardware, software and/or documentation owned by one or more third parties ("third-party materials"). Use of such third-party materials shall be governed by all restrictions and obligations applicable thereto.

We make no warranty or representation, either express or implied, regarding the third-party materials, including but not limited to any implied or statutory, warranties of merchantability or fitness for a particular purpose, quiet enjoyment, system integration, information accuracy, and non-infringement of any third-party intellectual property rights with regard to the licensed technology or use thereof. Nothing herein constitutes a representation or warranty by us to either develop, enhance, modify, distribute, market, sell, offer for sale, or otherwise maintain production of any our products or any other hardware, software, device, tool, information, or product. We moreover disclaim any and all warranties arising from the course of dealing or usage of trade.

Privacy Policy

To implement module functionality, certain device data are uploaded to Quectel's or third-party's servers, including carriers, chipset suppliers or customer-designated servers. Quectel, strictly abiding by the relevant laws and regulations, shall retain, use, disclose or otherwise process relevant data for the purpose of performing the service only or as permitted by applicable laws. Before data interaction with third parties, please be informed of their privacy and data security policy.

Disclaimer

a) We acknowledge no liability for any injury or damage arising from the reliance upon the information.
b) We shall bear no liability resulting from any inaccuracies or omissions, or from the use of the information contained herein.
c) While we have made every effort to ensure that the functions and features under development are free from errors, it is possible that they could contain errors, inaccuracies, and omissions. Unless otherwise provided by valid agreement, we make no warranties of any kind, either implied or express, and exclude all liability for any loss or damage suffered in connection with the use of features and functions under development, to the maximum extent permitted by law, regardless of whether such loss or damage may have been foreseeable.
d) We are not responsible for the accessibility, safety, accuracy, availability, legality, or completeness of information, advertising, commercial offers, products, services, and materials on third-party websites and third-party resources.

Copyright © Quectel Wireless Solutions Co., Ltd. 2022. All rights reserved.

Safety Information

The following safety precautions must be observed during all phases of operation, such as usage, service or repair of any cellular terminal or mobile incorporating the module. Manufacturers of the cellular terminal should notify users and operating personnel of the following safety information by incorporating these guidelines into all manuals of the product. Otherwise, Quectel assumes no liability for customers' failure to comply with these precautions.

	Full attention must be paid to driving at all times in order to reduce the risk of an accident. Using a mobile while driving (even with a handsfree kit) causes distraction and can lead to an accident. Please comply with laws and regulations restricting the use of wireless devices while driving.
	Switch off the cellular terminal or mobile before boarding an aircraft. The operation of wireless appliances in an aircraft is forbidden to prevent interference with communication systems. If there is an Airplane Mode, it should be enabled prior to boarding an aircraft. Please consult the airline staff for more restrictions on the use of wireless devices on an aircraft.
	Wireless devices may cause interference on sensitive medical equipment, so please be aware of the restrictions on the use of wireless devices when in hospitals, clinics or other healthcare facilities.
	Cellular terminals or mobiles operating over radio signal and cellular network cannot be guaranteed to connect in certain conditions, such as when the mobile bill is unpaid or the (U)SIM card is invalid. When emergency help is needed in such conditions, use emergency call if the device supports it. In order to make or receive a call, the cellular terminal or mobile must be switched on in a service area with adequate cellular signal strength. In an emergency, the device with emergency call function cannot be used as the only contact method considering network connection cannot be guaranteed under all circumstances.
	The cellular terminal or mobile contains a transmitter and receiver. When it is ON, it receives and transmits radio frequency signals. RF interference can occur if it is used close to TV set, radio, computer or other electric equipment.
	In locations with potentially explosive atmospheres, obey all posted signs to turn off wireless devices such as mobile phone or other cellular terminals. Areas with potentially explosive atmospheres include fuelling areas, below decks on boats, fuel or chemical transfer or storage facilities, areas where the air contains chemicals or particles such as grain, dust or metal powders.

About the Document

Revision History

Version	Date	Author	Description
-	2021-12-29	Davon ZHAO/ Robinson SHEN/ Eysen WANG/ Jacen HUANG	Creation of the document
1.0.0	2022-04-15	Davon ZHAO/ Robinson SHEN/ Eysen WANG/ Jacen HUANG	Preliminary

1 Introduction

The hardware design defines the air and hardware interfaces of EM060K-GL and EM120K-GL which are connected to your applications.

This document can help you quickly understand the interface specifications, electrical and mechanical details, as well as other related information of EM060K-GL and EM120K-GL. Besides, Reference design will be offered to facilitate their applications in diverse fields. Coupled with application notes and user guides, you can use the module to design and set up mobile applications easily.

Hereby, [Quectel Wireless Solutions Co., Ltd.] declares that the radio equipment type [EM060K-GL] and [EM120K-GL] are in compliance with Directive 2014/53/EU.
The full text of the EU declaration of conformity is available at the following internet address: http://www.quectel.com

The device could be used with a separation distance of 20cm to the human body.

FCC Certification Requirements.
According to the definition of mobile and fixed device is described in Part 2.1091(b), this device is a mobile device.
And the following conditions must be met:
1. This Modular Approval is limited to OEM installation for mobile and fixed applications only. The antenna installation and operating configurations of this transmitter, including any applicable source-based timeaveraging duty factor, antenna gain and cable loss must satisfy MPE categorical Exclusion Requirements of 2.1091.
2. The EUT is a mobile device; maintain at least a 20 cm separation between the EUT and the user's body and must not transmit simultaneously with any other antenna or transmitter.
3. A label with the following statements must be attached to the host end product: This device contains FCC ID: BEJ24EM060KGL
4. To comply with FCC regulations limiting both maximum RF output power and human exposure to RF radiation, maximum antenna gain (including cable loss) must not exceed:

radiation, maximum antenna gain (including cable loss)	FCC Max Antenna Gain（dBi）	IC Max Antenna Gain（dBi）

must not exceed: Operating Band		
WCDMA BAND II	1.9	1.9
WCDMA BAND IV	-2.0	-2.0
WCDMA BAND V	-1.1	-1.1
LTE BAND 2	1.9	1.9
LTE BAND 4	-2.0	-2.0
LTE BAND 5	-1.1	-1.1
LTE BAND 7, 38	1.5	1.5
LTE BAND 12,13, 14, 17, 26	-1.1	-1.1
LTE BAND 25, 66	1.9	1.9
LTE BAND 30	2.5	2.5
LTE BAND 41	3.6	3.6

5. This module must not transmit simultaneously with any other antenna or transmitter
6. The host end product must include a user manual that clearly defines operating requirements and conditions that must be observed to ensure compliance with current FCC RF exposure guidelines.

For portable devices, in addition to the conditions 3 through 6 described above, a separate approval is required to satisfy the SAR requirements of FCC Part 2.1093

If the device is used for other equipment that separate approval is required for all other operating configurations, including portable configurations with respect to 2.1093 and different antenna configurations.

For this device, OEM integrators must be provided with labeling instructions of finished products. Please refer to KDB784748 D01 v07, section 8. Page 6/7 last two paragraphs:

A certified modular has the option to use a permanently affixed label, or an electronic label. For a permanently affixed label, the module must be labeled with an FCC ID - Section 2.926 (see 2.2 Certification (labeling requirements) above). The OEM manual must provide clear instructions explaining to the OEM the labeling requirements, options and OEM user manual instructions that are required (see next paragraph).

For a host using a certified modular with a standard fixed label, if (1) the module's FCC ID is not visible when installed in the host, or (2) if the host is marketed so that end users do not have straightforward commonly used methods for access to remove the module so that the FCC ID of the module is visible; then an additional permanent label referring to the enclosed module: "Contains Transmitter Module FCC ID: BEJ24EM060KGL" must be used. The host OEM user manual must also contain clear instructions on how end users can find and/or access the module and the FCC ID.

The final host / module combination may also need to be evaluated against the FCC Part 15B criteria for unintentional radiators in order to be properly authorized for operation as a Part 15 digital device.

The user's manual or instruction manual for an intentional or unintentional radiator shall caution the user

that changes or modifications not expressly approved by the party responsible for compliance could void the user's authority to operate the equipment. In cases where the manual is provided only in a form other than paper, such as on a computer disk or over the Internet, the information required by this section may be included in the manual in that alternative form, provided the user can reasonably be expected to have the capability to access information in that form.

This device complies with part 15 of the FCC Rules. Operation is subject to the following two conditions: (1) This device may not cause harmful interference, and (2) this device must accept any interference received, including interference that may cause undesired operation.

Changes or modifications not expressly approved by the manufacturer could void the user's authority to operate the equipment.

To ensure compliance with all non-transmitter functions the host manufacturer is responsible for ensuring compliance with the module(s) installed and fully operational. For example, if a host was previously authorized as an unintentional radiator under the Supplier's Declaration of Conformity procedure without a transmitter certified module and a module is added, the host manufacturer is responsible for ensuring that the after the module is installed and operational the host continues to be compliant with the Part 15B unintentional radiator requirements.

Manual Information To the End User

The OEM integrator has to be aware not to provide information to the end user regarding how to install or remove this RF module in the user's manual of the end product which integrates this module. The end user manual shall include all required regulatory information/warning as show in this manual.

IC Statement

IRSS-GEN

"This device complies with Industry Canada's licence-exempt RSSs. Operation is subject to the following two conditions: (1) This device may not cause interference; and (2) This device must accept any interference, including interference that may cause undesired operation of the device." or "Le présent appareil est conforme aux CNR d'Industrie Canada applicables aux appareils radio exempts de licence. L'exploitation est autorisée aux deux conditions suivantes :

1) l'appareil ne doit pas produire de brouillage; 2) l'utilisateur de l'appareil doit accepter tout brouillage radioélectrique subi, même si le brouillage est susceptible d'en compromettre le fonctionnement."

Déclaration sur l'exposition aux rayonnements RF

L'autre utilisé pour l'émetteur doit être installé pour fournir une distance de séparation d'au moins 20 cm de toutes les personnes et ne doit pas être colocalisé ou fonctionner conjointement avec une autre antenne ou un autre émetteur.

The host product shall be properly labeled to identify the modules within the host product.

The Innovation, Science and Economic Development Canada certification label of a module shall be clearly visible at all times when installed in the host product; otherwise, the host product must be labeled to display the Innovation, Science and Economic Development Canada certification number for the module, preceded by the word "Contains" or similar wording expressing the same meaning, as follows:

"Contains IC: 2703H-24EM060KGL"

Le produit hôte doit être correctement étiqueté pour identifier les modules dans le produit hôte. L'étiquette de certification d'Innovation, Sciences et Développement économique Canada d'un module doit être clairement visible en tout temps lorsqu'il est installédans le produit hôte; sinon, le produit hôte doit porter une étiquette indiquant le numéro de certification d'Innovation, Sciences et Développement économique Canada pour le module, précédé du mot «Contient» ou d'un libellé semblable exprimant la même signification, comme suit:
"Contient IC: 2703H-24EM060KGL" est le numéro de certification du module.

1.1. Reference Standard

The module complies with the following standards:

- *PCI Express M.2 Specification Revision 3.0*, *Version 1.2*
- *PCI Express Base Specification Revision 2.0*
- *Universal Serial Bus Specification, Revision 3.0*
- *ISO/IEC 7816-3*
- *MIPI Alliance Specification for RF Front-End Control Interface Version 2.0*
- *3GPP TS 27.007* and *3GPP 27.005*
- *3GPP TS 34.121-1* and *3GPP TS 36.521-1*

1.2. Special Marks

Table 1: Special Marks

Mark	Definition
*	Unless otherwise specified, when an asterisk (*) is used after a function, feature, interface, pin name, AT command, or argument, it indicates that the function, feature, interface, pin, AT command, or argument is under development and currently not supported; and the asterisk (*) after a model indicates that the sample of the model is currently unavailable.
[…]	Brackets ([…]) used after a pin enclosing a range of numbers indicate all pins of the same type. For example, SDIO_DATA [0:3] refers to all four SDIO pins: SDIO_DATA0, SDIO_DATA1, SDIO_DATA2, and SDIO_DATA3.

2 Product Overview

2.1. Frequency Bands and Functions

EM060K-GL and EM120K-GL are LTE-A/UMTS/HSPA+ wireless communication modules with receive diversity. They provide data connectivity on LTE-FDD, LTE-TDD, DC-HSDPA, HSPA+, HSDPA, HSUPA and WCDMA networks. They are standard WWAN M.2 Key-B modules. For more details, see *PCI Express M.2 Specification Revision 2.0, Version 1.2*.

They support embedded operating systems such as Windows, Linux and Android, and also provide GNSS and voice functionality [1] to meet specific application demands.

The following table shows the frequency bands and GNSS types of the module. And details about CA combinations can be found in ***document [1] and document [2]***.

Table 2: Frequency Bands and GNSS Types of EM060K-GL and EM120K-GL

Mode	Frequency Bands
LTE-FDD (with Rx-diversity)	B2/B4/B5/B7/B12/B13/B14 /B17 [2]/B25/B26/B30/B32/B66
LTE-TDD (with Rx-diversity)	B38/B41
WCDMA (with Rx-diversity)	B2/B4/B5

The module can be applied in the following fields:

- Tablet PC and Laptop
- Remote Monitor System
- Wireless POS System

[2] B17 is supported through MFBI + B12.

- Smart Metering System
- Wireless Router and Switch
- Other Wireless Terminal Devices

2.2. Key Features

Table 3: Key Features

Feature	Details
Function Interface	PCI Express M.2 Interface
Power Supply	● Supply voltage: 3.135–4.4 V ● Typical supply voltage: 3.7 V
(U)SIM Interface	● Compliant with *ISO/IEC 7816-3* and ETSI and IMT-2000 requirements ● Supports (U)SIM card: 1.8/3.0 V ● Supports Dual SIM Single Standby
eSIM	eSIM function is optional
USB Interface	● Compliant with USB 3.0 and 2.0 specifications, with maximum transmission rates up to 5 Gbps on USB 3.0 and 480 Mbps on USB 2.0. ● Used for AT command communication, data transmission, firmware upgrade (USB 2.0 only), software debugging, GNSS NMEA sentence output, and voice over USB*. ● Supports USB serial drivers: – Windows 7/8/8.1/10/11; – Linux 2.6- 5.15 – Android 4.x-12.x
PCM Interface*	● Used for audio function with external codec ● Supports 16-bit linear data format ● Supports long and short frame synchronization ● Supports master and slave modes, but must be the master in long frame synchronization
Rx-diversity	LTE/WCDMA
Antenna Interfaces	● Main, Diversity and GNSS antenna connectors ● 50 Ω impedance
Transmitting Power	● WCDMA: Class 3 (23 dBm ±2 dB) ● LTE-FDD/TDD: Class 3 (23 dBm ±2 dB)
LTE Features	**EM060K-GL** ● Supports 3GPP Rel-12 LTE-FDD and LTE-TDD ● Supports 1.4/3/5/10/15/20 MHz RF bandwidth

	– Supports up to UL Cat 6 – Supports up to DL CA Cat 6 ● LTE-FDD: Max. 300 Mbps (DL)/50 Mbps (UL) ● LTE-TDD: Max. 226 Mbps (DL)/28 Mbps (UL) ● Supports UL QPSK and 16QAM modulation ● Supports DL QPSK, 16QAM and 64QAM **EM120K-GL** ● Supports 3GPP Rel-12 LTE-FDD and LTE-TDD ● Supports 1.4/3/5/10/15/20 MHz RF bandwidth – Supports up to UL CA Cat 13 – Supports up to DL CA Cat 12 ● LTE-FDD: Max. 600 Mbps (DL)/150 Mbps (UL) ● LTE-TDD: Max. 430 Mbps (DL)/90 Mbps (UL) ● Supports UL QPSK ,16QAM and 64QAM modulation ● Supports DL QPSK, 16QAM, 64QAM and 256QAM modulation
UMTS Features	● Supports 3GPP Rel-9 DC-HSDPA, HSPA+, HSDPA, HSUPA and WCDMA ● Supports QPSK, 16QAM and 64QAM modulation ● DC-HSDPA: Max. 42 Mbps (DL) ● HSUPA: Max. 5.76 Mbps (UL) ● WCDMA: Max. 384 kbps (DL)/384 kbps (UL)
GNSS Features	● Supports GPS, GLONASS, BDS and Galileo ● Data update rate: 1 Hz by default
AT Commands	● Compliant with *3GPP TS 27.007* and *3GPP TS 27.005* ● Quectel enhanced AT commands
Internet Protocol Features	QMI/MBIM/NITZ/HTTP/HTTPS/FTP/LwM2M*/PING*
Firmware Upgrade	Via USB 2.0 or DFOTA
SMS	● Point-to-point MO and MT ● Text and PDU Modes ● SMS cell broadcast ● SMS storage: ME by default
Physical Characteristics	● M.2 Key-B ● Size: 30.0 mm × 42.0 mm × 2.3 mm ● Weight: approx. 6.2 g
Temperature Range	● Operating temperature range: -25 to +75 °C [4] ● Extended temperature range: -40 to +85 °C [5]

[4] To meet this operating temperature range, you need to ensure effective thermal dissipation, for example, by adding passive or active heatsinks, heat pipes, vapor chambers, etc. Within this range, the module can meet 3GPP specifications.
[5] To meet this extended temperature range, you need to ensure effective thermal dissipation, for example, by adding passive or active heatsinks, heat pipes, vapor chambers, etc. Within this range, the module remains the ability to establish and maintain functions such as voice*, SMS, emergency call* etc., without any unrecoverable malfunction. Radio spectrum and radio network are not influenced, while one or more specifications, such as P_{out}, may undergo a reduction in value, exceeding the specified tolerances of 3GPP. When the temperature returns to the normal operating temperature level, the module will meet 3GPP specifications again.

	● Storage temperature range: -40 to +90 °C
RoHS	All hardware components are fully compliant with EU RoHS directive

2.3. Functional Diagram

The following figure shows a functional diagram of EM060K-GL and EM120K-GL.

- Power management
- Baseband
- LPDDR2 SDRAM+NAND Flash
- Radio frequency
- M.2 Key-B interface

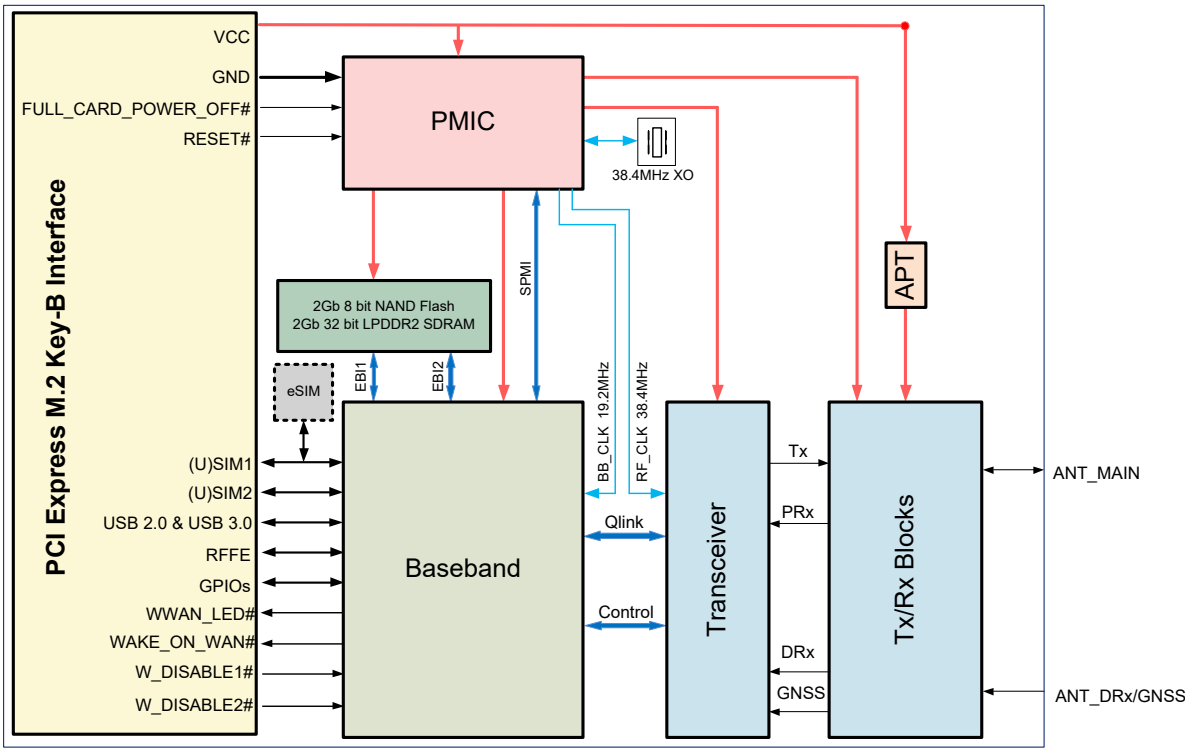

Figure 1: Functional Diagram

2.4. Pin Assignment

The following figure shows the pin assignment of the module. The top side contains module and antenna connectors.

No.	Pin Name
74	VCC
72	VCC
70	VCC
68	NC
66	USIM1_DET
64	COEX_TXD
62	COEX_RXD
60	WLAN_PA_EN
58	RFFE_DATA
56	RFFE_CLK
54	NC
52	NC
50	NC
48	USIM2_VDD
46	USIM2_RST
44	USIM2_CLK
42	USIM2_DATA
40	USIM2_DET
38	NC
36	USIM1_VDD
34	USIM1_DATA
32	USIM1_CLK
30	USIM1_RST
28	PCM_SYNC
26	W_DISABLE2#
24	PCM_DOUT
22	PCM_DIN
20	PCM_CLK
	Notch
	Notch
	Notch
	Notch
10	WWAN_LED#
8	W_DISABLE1#
6	FULL_CARD_POWER_OFF#
4	VCC
2	VCC

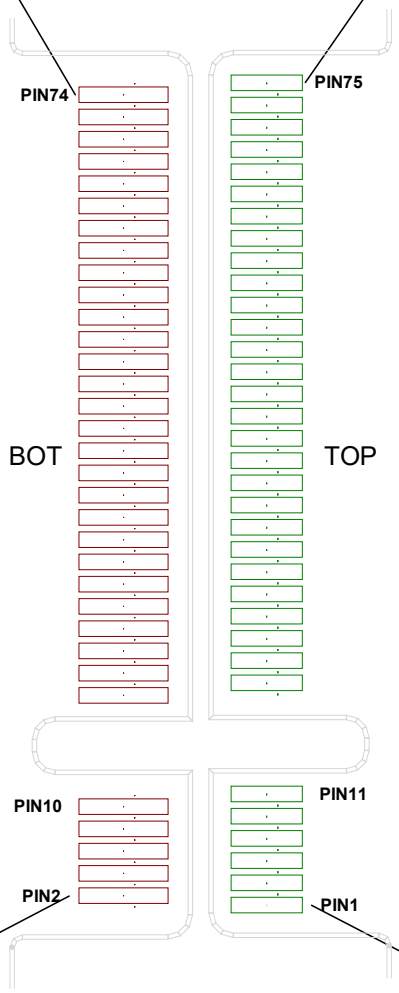

Pin Name	No.
CONFIG_2	75
GND	73
GND	71
CONFIG_1	69
RESET#	67
ANTCTL3	65
ANTCTL2	63
ANTCTL1	61
ANTCTL0	59
GND	57
NC	55
NC	53
GND	51
NC	49
NC	47
GND	45
NC	43
NC	41
GND	39
USB_SS_RX_P	37
USB_SS_RX_M	35
GND	33
USB_SS_TX_P	31
USB_SS_TX_M	29
GND	27
DPR	25
WAKE_ON_WAN#	23
CONFIG_0	21
Notch	
Notch	
Notch	
Notch	
GND	11
USB_DM	9
USB_DP	7
GND	5
GND	3
CONFIG_3	1

Figure 2: Pin Assignment

2.5. Pin Description

Table 4: Definition of I/O Parameters

Type	Description
AI	Analog Input
AO	Analog Output
AIO	Analog Input/Output
DI	Digital Input
DO	Digital Output
DIO	Digital Input/Output
OD	Open Drain
PI	Power Input
PO	Power Output
PU	Pull Up
PD	Pull Down

Table 5: Pin Description

Pin No.	Pin Name	I/O	Description	DC Characteristic	Comment
1	CONFIG_3	DO	Not connected internally		
2	VCC	PI	Power supply	Vmin = 3.135 V Vnom = 3.7 V Vmax = 4.4 V	
3	GND		Ground		
4	VCC	PI	Power supply	Vmin = 3.135 V Vnom = 3.7 V Vmax = 4.4 V	
5	GND		Ground		

6	FULL_CARD_ POWER_OFF#	DI, PD	Turn on/off the module. High level: Turn on Low level: Turn off	V_{IH}max = 4.4 V V_{IH}min = 1.19 V V_{IL}max = 0.2 V	Internally pulled down with a 100 kΩ resistor
7	USB_DP	AIO	USB differential data (+)		
8	W_DISABLE1#*	DI, PU	Airplane mode control. Active LOW.	V_{IH}min = 1.8 V V_{IL}max = 0.4 V V_{IL}min = -0.4 V	
9	USB_DM	AIO	USB differential data (-)		
10	WWAN_LED#*	OD	RF status indication LED. Active LOW.	VCC	
11	GND		Ground		
12	Notch		Notch		
13	Notch		Notch		
14	Notch		Notch		
15	Notch		Notch		
16	Notch		Notch		
17	Notch		Notch		
18	Notch		Notch		
19	Notch		Notch		
20	PCM_CLK*	DIO, PD	PCM clock	1.8 V	
21	CONFIG_0	DO	Connected to GND internally		
22	PCM_DIN*	DI, PD	PCM data input	1.8 V	
23	WAKE_ON_ WAN#*	OD	Wake up the host. Active LOW.	1.8/3.3 V	
24	PCM_DOUT*	DO, PD	PCM data output	1.8 V	
25	DPR*	DI, PU	Dynamic power reduction.	1.8 V	High level by default.
26	W_DISABLE2#*	DI, PU	GNSS disable control. Active LOW.	V_{IH}min = 1.8 V V_{IL}max = 0.4 V V_{IL}min = -0.4 V	
27	GND		Ground		

28	PCM_SYNC*	DIO, PD	PCM data frame sync	1.8 V	
29	USB_SS_TX_M	AO	USB 3.0 super-speed transmit (-)		
30	USIM1_RST	DO, PD	(U)SIM1 card reset	USIM1_VDD 1.8/3.0 V	
31	USB_SS_TX_P	AO	USB 3.0 super-speed transmit (+)		
32	USIM1_CLK	DO, PD	(U)SIM1 card clock	USIM1_VDD 1.8/3.0 V	
33	GND		Ground		
34	USIM1_DATA	DIO, PD	(U)SIM1 card data	USIM1_VDD 1.8/3.0 V	
35	USB_SS_RX_M	AI	USB 3.0 super-speed receive (-)		
36	USIM1_VDD	PO	(U)SIM1 card power supply	1.8/3.0 V	
37	USB_SS_RX_P	AI	USB 3.0 super-speed receive (+)		
38	NC		Not connected		
39	GND		Ground		
40	USIM2_DET*[6]	DI, PD	(U)SIM2 card detect	1.8 V	Internally pulled up to 1.8 V
41	NC		Not connected		
42	USIM2_DATA	DIO, PD	(U)SIM2 card data	USIM2_VDD 1.8/3.0 V	
43	NC		Not connected		
44	USIM2_CLK	DO, PD	(U)SIM2 card clock	USIM2_VDD 1.8/3.0 V	
45	GND		Ground		
46	USIM2_RST	DO, PD	(U)SIM2 card reset	USIM2_VDD 1.8/3.0 V	
47	NC		Not connected		
48	USIM2_VDD	PO	(U)SIM2 card power supply	1.8/3.0 V	

[6] This pin is pulled LOW by default, and will be internally pulled up to 1.8 V by software configuration only when (U)SIM hot-plug is enabled by **AT+QSIMDET.** See ***document [1]*** for details about the AT command.

49	NC		Not connected		
50	NC		Not connected		
51	GND		Ground		
52	NC		Not connected		
53	NC		Not connected		
54	NC		Not connected		
55	NC		Not connected		
56	RFFE_CLK [7]*	DO, PD	Used for external MIPI IC control	1.8 V	
57	GND		Ground		
58	RFFE_DATA [7] *	DIO, PD	Used for external MIPI IC control	1.8 V	
59	ANTCTL0*	DO, PD	Antenna GPIO control	1.8 V	
60	WLAN_PA_EN*	DI, PD	Self-protection of QLN control	1.8 V	
61	ANTCTL1*	DO, PD	Antenna GPIO control	1.8 V	
62	COEX_RXD*	DI, PD	LTE/WLAN coexistence receive	1.8 V	
63	ANTCTL2*	DO, PD	Antenna GPIO control	1.8 V	
64	COEX_TXD*	DO, PD	LTE/WLAN coexistence transmit	1.8 V	
65	ANTCTL3*	DO, PD	Antenna GPIO control	1.8 V	
66	USIM1_DET [8]	DI, PD	(U)SIM1 card hot-plug detect	1.8 V	Internally pulled up to 1.8 V [8]
67	RESET#	DI, PU	Reset the module. Active LOW	V_{IH}max = 2.1 V V_{IH}min = 1.3 V V_{IL}max = 0.5 V	Internally pulled up to 1.8 V with a 10 kΩ resistor.
68	NC		Not connected		
69	CONFIG_1	DO	Connected to GND internally		

[7] If RFFE_CLK and RFFE_DATA is required, please contact Quectel for more details.
[8] This pin is pulled low by default, and will be internally pulled up to 1.8 V by software configuration only when (U)SIM hot-plug is enabled by **AT+QSIMDET**. See ***document [4]*** for details about the AT command.

70	VCC	PI	Power supply for the module	Vmin = 3.135 V Vnom = 3.7 V Vmax = 4.4 V
71	GND		Ground	
72	VCC	PI	Power supply	Vmin = 3.135 V Vnom = 3.7 V Vmax = 4.4 V
73	GND		Ground	
74	VCC	PI	Power supply	Vmin = 3.135 V Vnom = 3.7 V Vmax = 4.4 V
75	CONFIG_2	DO	Not connected internally	

NOTE

Keep all NC, reserved and unused pins unconnected.

2.6. EVB kit

To help you develop applications conveniently with EM060K-GL and EM120K-GL, Quectel supplies an evaluation board (5G-M2 EVB). For more details, see ***document [1]***.

3 Operating Characteristics

3.1. Operating Modes

The table below summarizes different operating modes of the module.

Table 6: Overview of Operating Modes

Mode	Details	
Normal Operation Mode	Idle	Software is active. The module has registered on the network, and it is ready to send and receive data.
	Voice*/Data	Network connected. In this mode, the power consumption is decided by network setting and data transfer rate.
Minimum Functionality Mode	**AT+CFUN=0** command sets the module to a minimum functionality mode without removing the power supply. In this mode, both RF function and (U)SIM card are invalid.	
Airplane Mode	**AT+CFUN=4** command or driving W_DISABLE1# pin low will set the module to airplane mode. In this mode, the RF function is invalid.	
Sleep Mode	The modules keep receiving paging messages, SMS, voice* calls and TCP/UDP data from the network with its power consumption reduced to the minimal level.	
Power Down Mode	In this mode, the power management unit shuts down the power supply. Software is inactive, while all interfaces are inaccessible and the operating voltage (connected to VCC) remains applied.	

See ***document [4]*** for more details about the AT command mentioned above.

3.2. Sleep Mode

In sleep mode, DRX of the module is able to reduce the power consumption to a minimum level, and DRX cycle index values are broadcasted by the wireless network. The figure below shows the relationship between the DRX run time and the power consumption in sleep mode. The longer the DRX cycle is, the lower the power consumption will be.

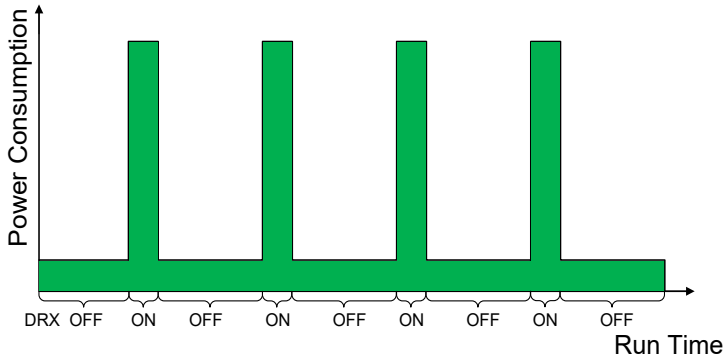

Figure 3: DRX Run Time and Power Consumption in Sleep Mode

The following part of this section describes the power saving procedure and sleep mode entrance of the module.

If the host supports USB suspend/resume and remote wakeup function, the following two conditions must be realized to bring the module into sleep mode.

- Execute **AT+QSCLK=1** command to enable the sleep mode. See ***document [4]*** for more details.
- The host's USB bus, which is connected to the module's USB interface, enters suspend state.

The following figure shows the connection between the module and the host.

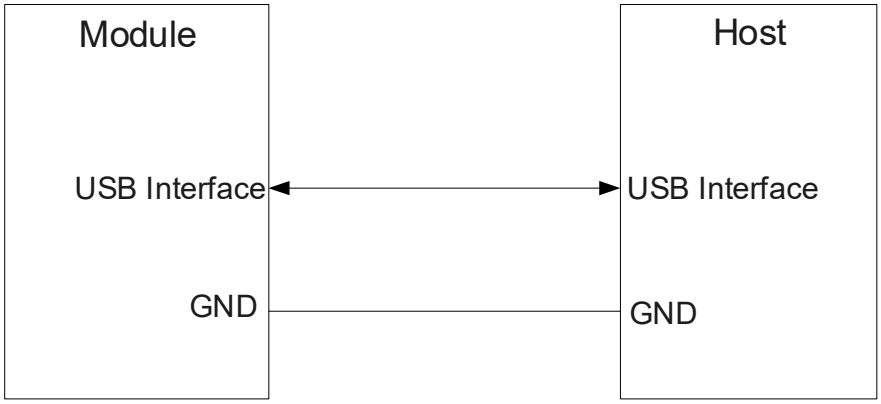

Figure 4: Sleep Mode Application with USB Remote Wakeup

The module and the host will wake up in the following conditions:

- Sending data to the module through USB will wake up the module.
- When module has a URC to report, the module will send remote wake-up signals via USB bus to wake up the host.

3.3. Airplane Mode

The module provides a W_DISABLE1# pin to disable or enable airplane mode through hardware operation. See ***Chapter 4.4*** for more details

3.4. Communication Interface with the Host

The module supports communicate through USB interfaces:

USB Mode

- Supports all USB 2.0/3.0 features
- Supports MBIM/QMI/QRTR/AT

USB is the default communication interface between the module and the host. It is suggested that USB 2.0 interface be reserved for firmware upgrade.

3.5. Power Supply

3.5.1. Power Supply Pins

Table 7: Definition of VCC and GND Pins

Pin No.	Pin Name	I/O	Description	Comment
2, 4, 70, 72, 74	VCC	PI	Power supply	3.135–4.4 V 3.7 V typical DC supply
3, 5, 11, 27, 33, 39, 45, 51, 57, 71, 73	GND		Ground	

3.5.2. Reference Design for Power Supply

Power design is vital to the module, as the performance of the module largely depends on the power source. If the voltage difference between the input and output is not too high, it is suggested that an LDO be used when supplying power for the module. If there is a big voltage difference between the input source and the desired output (VCC = 3.7 V Typ.), adding a buck DC-DC converter is preferred.

The following figure shows a reference design for +5 V input power source based on the DC-DC TPS54319. The typical output of the power supply is about 3.7 V and the maximum load current is 3.0 A.

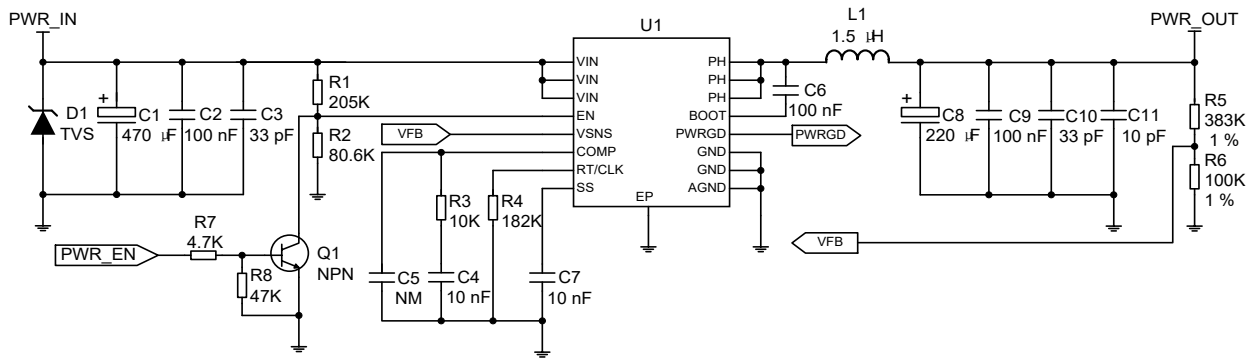

Figure 5: Reference Circuit for the Power Supply

NOTE

To avoid corrupting the data in the internal flash, do not cut off the power supply before the module is completely turned off by pulling down FULL_CARD_POWER_OFF# pin for more than 6.6 s, and do not cut off power supply directly when the module is working.

3.5.3. Voltage Stability Requirements

The power supply of the module ranges from 3.135 V to 4.4 V. Please ensure that the input voltage will never drop below 3.135 V, otherwise the module will be powered off automatically. The following figure shows the maximum voltage drop during radio transmission in 3G/4G networks.

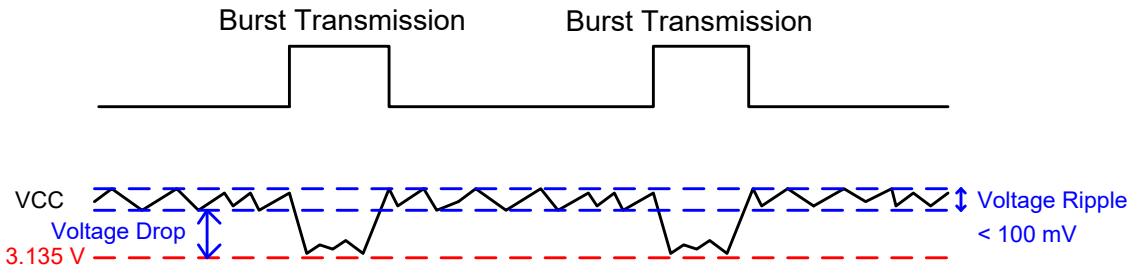

Figure 6: Power Supply Limits during Radio Transmission

Ensure the continuous current capability of the power supply is 2.0 A. To decrease the voltage drop, two bypass capacitors of about 220 µF with low ESR (ESR = 0.7 Ω) should be used. To decrease the power supply being disturbed, a multi-layer ceramic chip capacitor (MLCC) array also should be used due to their ultra-low ESR. It is recommended to use four ceramic capacitors (1 µF, 100 nF, 33 pF, 10 pF) for composing the MLCC array, and to place these capacitors close to VCC pins. The width of VCC trace should be no less than 2.5 mm. In principle, the longer the VCC trace is, the wider it should be.

In addition, to guarantee the stability of the power supply, please use a TVS with a reverse TVS voltage of

5.1 V and a dissipation power higher than 0.5 W. The following figure shows a reference circuit of the VCC.

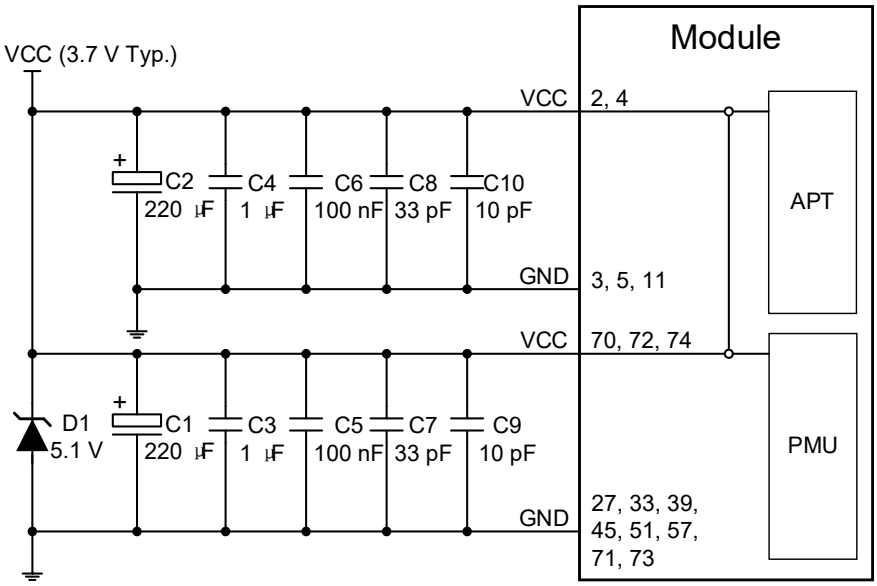

Figure 7: Reference Circuit for the VCC

3.6. Turn on

FULL_CARD_POWER_OFF# is used to turn on/off the module. When the input signal is de-asserted high (≥ 1.19 V), the module will be turned on. When the input signal is driven low (≤ 0.2 V) or Tri-stated, the module will be turned off.

This input signal is 3.3 V tolerant and can be driven by either 1.8 V or 3.3 V GPIO. Also, it has internally pulled down with a 100 kΩ resistor.

Table 8: Pin Definition of FULL_CARD_POWER_OFF#

Pin No.	Pin Name	I/O	Description	Comment
6	FULL_CARD_ POWER_OFF#	DI, PD	Turn on/off the module. High level: Turn on Low level: Turn off	Pull down with a 100 kΩ resistor.

It is recommended to use a host GPIO to control FULL_CARD_POWER_OFF#. A simple reference circuit is illustrated in the following figure.

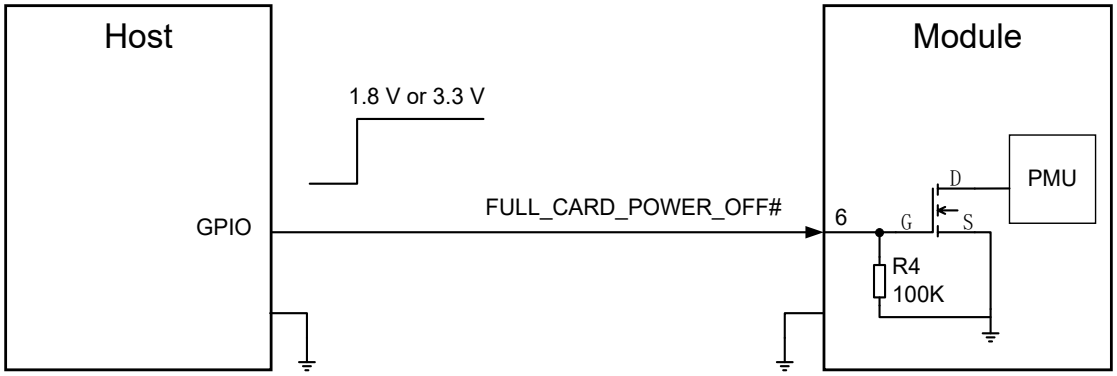

Figure 8: Turn on the Module with a Host GPIO

The timing of turn-on scenario is illustrated in the following figure.

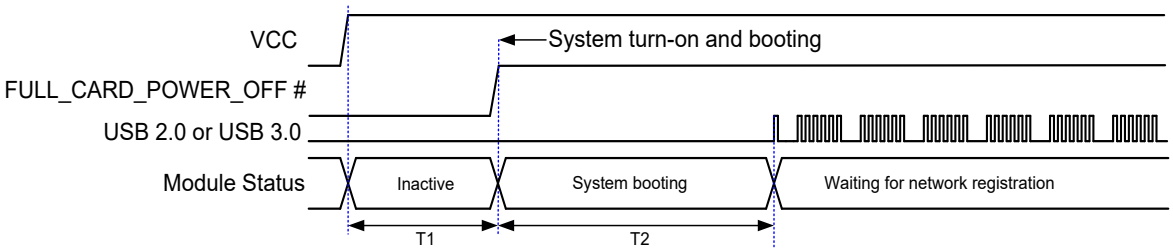

Figure 9: Turn-on Timing of the Module

Table 9: Turn-on Timing of the Module

Symbol	Min.	Typ.	Max.	Comment
T1	0 ms	-	-	Module power-on time
T2	-	5.9 s	-	System booting

3.7. Turn off

For the design that turns off the module with a host GPIO, when the power is supplied to VCC, pulling down FULL_CARD_POWER_OFF# pin will turn off the module. The timing of turn-off scenario is illustrated in the following figure.

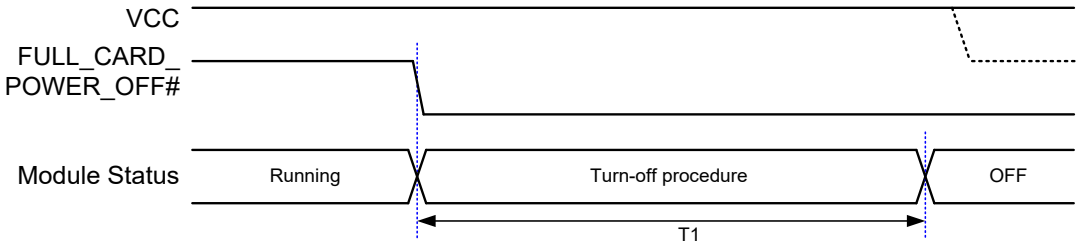

Figure 10: Turn-off Timing through FULL_CARD_POWER_OFF#

Table 10: Turn-off Timing of the Module

Symbol	Min.	Typ.	Max.	Comment
T1	6.5 s	6.6 s	-	Module system turn-off time.

3.8. Reset

The RESET# pin is used to reset the module. The module can be reset by driving RESET# low for 250–600 ms.

Table 11: Pin Definition of RESET#

Pin No.	Pin Name	I/O	Description	Comment
67	RESET#	DI, PU	Reset the module Active LOW.	Internally pulled up to 1.8 V with a 10 kΩ resistor.

NOTE

Triggering the RESET# signal will lead to loss of all data in the modem and removal of system drivers. It will also detach the modem from the network.

The module can be reset by pulling down the RESET# pin for 250–600 ms. An open collector/drain driver or a button can be used to control the RESET# pin.

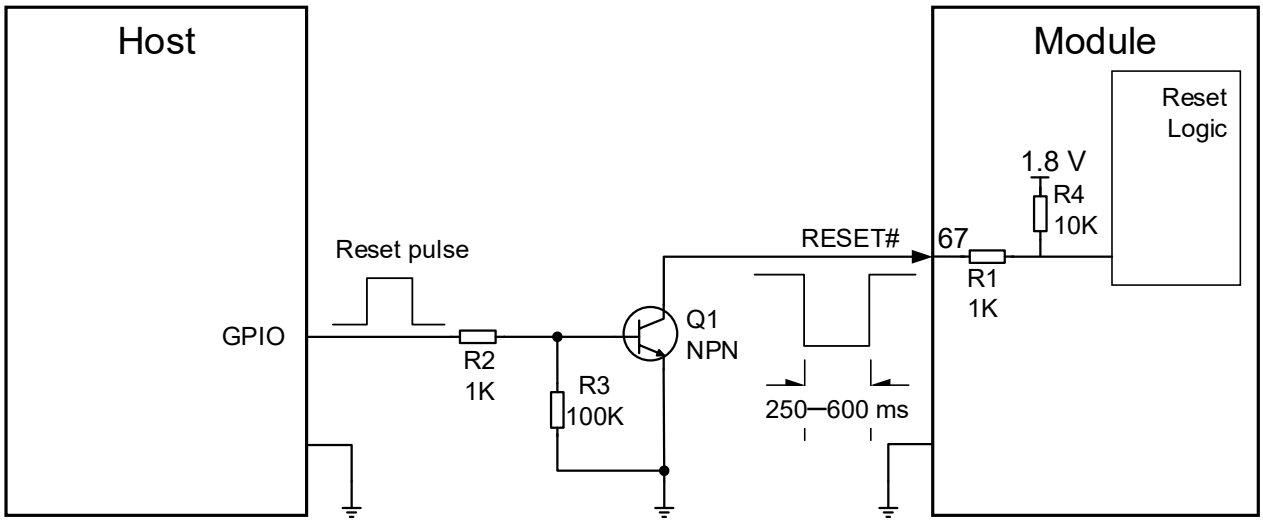

Figure 11: Reference Circuit for the RESET# with NPN Driver Circuit

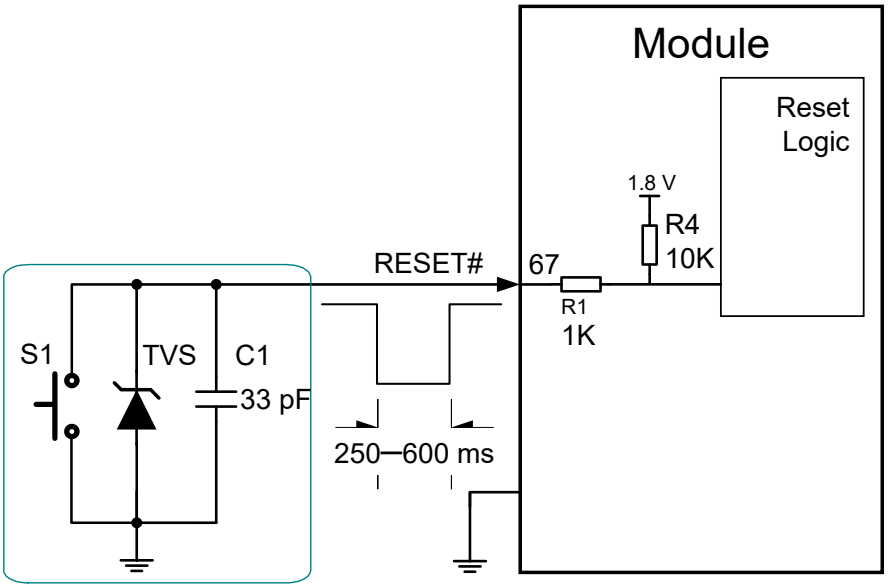

NOTE: The capacitor C1 is recommended to be less than 47 pF.

Figure 12: Reference Circuit for the RESET# with a Button

The timing of reset scenario is illustrated in the following figure.

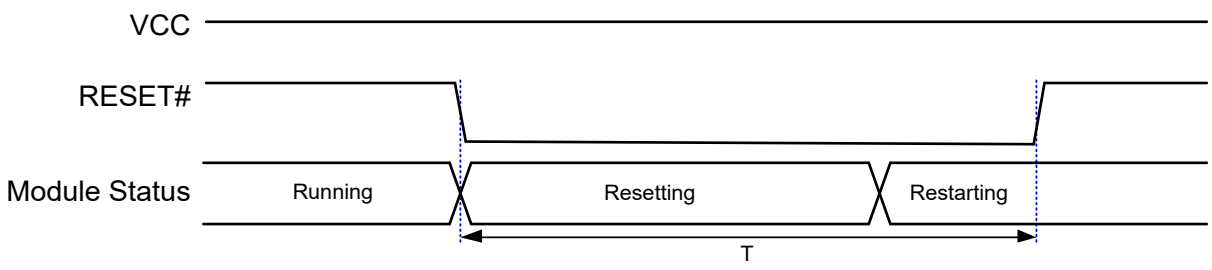

Figure 13: Reset Timing of the Module

Table 12: Reset Timing of the Module

Symbol	Min.	Typ.	Max.	Comment
T	250 ms	500 ms	600 ms	RESET# should be pulled down for 250–600 ms. An asserting time of less than 200 ms is unreliable, while that of higher than 600 ms will cause repeated reset.

4 Application Interfaces

4.1. (U)SIM Interface

The (U)SIM interface circuitry meets ETSI and IMT-2000 requirements and *ISO/IEC 7816-3*. Both Class B (3.0 V) and Class C (1.8 V) (U)SIM cards are supported, and Dual SIM Single Standby function is supported.

4.1.1. Pin definition of (U)SIM

Table 13: Pin Definition of (U)SIM Interfaces

Pin No.	Pin Name	I/O	Description	Comments
36	USIM1_VDD	PO	(U)SIM1 card power supply	1.8/3.0 V
34	USIM1_DATA	DIO, PD	(U)SIM1 card data	USIM1_VDD 1.8/3.0 V
32	USIM1_CLK	DO, PD	(U)SIM1 card clock	
30	USIM1_RST	DO, PD	(U)SIM1 card reset	
66	USIM1_DET	DI, PD	(U)SIM1 card hot-plug detect	1.8 V
40	USIM2_DET*	DI, PD	(U)SIM2 card hot-plug detect	1.8 V
42	USIM2_DATA	DIO, PD	(U)SIM2 card data	USIM2_VDD 1.8/3.0 V
44	USIM2_CLK	DO, PD	(U)SIM2 card clock	
46	USIM2_RST	DO, PD	(U)SIM2 card reset	
48	USIM2_VDD	PO	(U)SIM2 card power supply	1.8/3.0 V

NOTE

USIM1_DET and USIM2_DET are pulled low by default, and will be internally pulled up to 1.8 V by

software configuration only when (U)SIM hot-plug is enabled by **AT+QSIMDET**. See ***document [4]*** for more details about the AT command mentioned above.

4.1.2. (U)SIM Hot-Plug

The module supports (U)SIM card hot-plug via (U)SIM card hot-plug detection pins (USIM1_DET and USIM2_DET). (U)SIM card insertion is detected by high/low level, and (U)SIM card hot-plug is disabled by default.

The following commands enables (U)SIM card hot-plug function.

AT+QSIMDET (U)SIM Card Detection	
Test Command **AT+QSIMDET=?**	Response **+QSIMDET: (**list of supported **<enable>**s**),(**list of supported **<insert_level>**s**)** **OK**
Read Command **AT+QSIMDET?**	Response **+QSIMDET: <enable>,<insert_level>** **OK**
Write Command **AT+QSIMDET=<enable>,<insert_level>**	Response **OK** If there is any error: **ERROR**
Maximum Response Time	300 ms
Characteristics	The command takes effect after the module is restarted. The configuration will be saved to NVRAM automatically.

Parameter

<enable>	Integer type. Enable or disable (U)SIM card detection. 0 Disable 1 Enable
<insert_level>	Integer type. The level of (U)SIM detection pin when a (U)SIM card is inserted. 0 Low level 1 High level

NOTE

1. Hot-plug function is invalid if the configured value of **<insert_level>** is inconsistent with hardware design.
2. The underlined value is the default parameter value.
3. USIM1_DET and USIM2_DET are pulled low by default, and will be internally pulled up to 1.8 V by software configuration only when (U)SIM hot-plug is enabled by **AT+QSIMDET**.

4.1.3. Normally Closed (U)SIM Card Connector

With a normally closed (U)SIM card connector, USIM_DET pin is normally shorted to ground when there is no (U)SIM card inserted. (U)SIM card detection by high level is applicable to this type of connector. After executing **AT+QSIMDET=1,1** to enable the (U)SIM hot-plug: when a (U)SIM card is inserted, USIM_DET will change from low to high level; when the (U)SIM card is removed, USIM_DET will change from high to low level.

- When the (U)SIM is absent, CD is short-circuited to ground and USIM_DET is at low level.
- When the (U)SIM is present, CD is open from ground and USIM_DET is at high level.

The following figure shows a reference design of (U)SIM interface with a normally closed (U)SIM card connector.

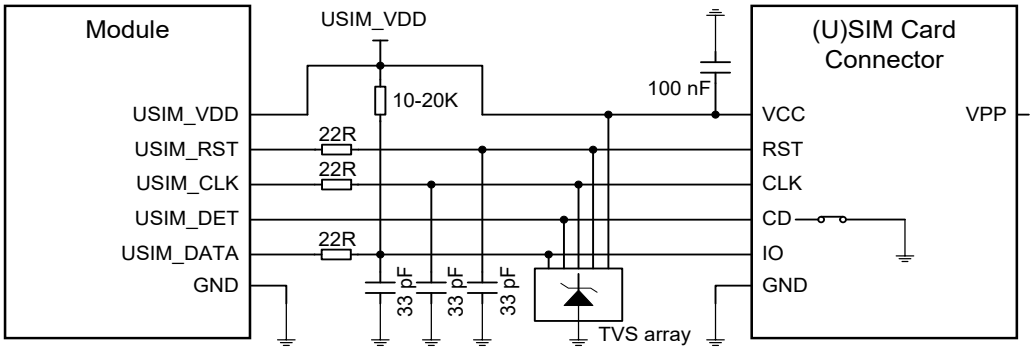

NOTE: All these resistors, capacitors and ESD should be close to (U)SIM card connector in PCB layout.

Figure 14: Reference Circuit for Normally Closed (U)SIM Card Connector

4.1.4. Normally Open (U)SIM Card Connector

With a normally open (U)SIM card connector, CD1 and CD2 of the connector are disconnected when there is no (U)SIM card inserted. (U)SIM card detection by low level is applicable to this type of connector. After executing **AT+QSIMDET=1,0** to enable the (U)SIM hot-plug function: when a (U)SIM card is inserted, USIM_DET will decrease from high to low level; when the (U)SIM card is removed, USIM_DET will increase from low to high level.

- When the (U)SIM is absent, CD1 is open from CD2 and USIM_DET is at high level.
- When the (U)SIM is inserted, CD1 is short-circuited to ground and USIM_DET is at low level.

The following figure shows a reference design of (U)SIM interface with a normally open (U)SIM card connector.

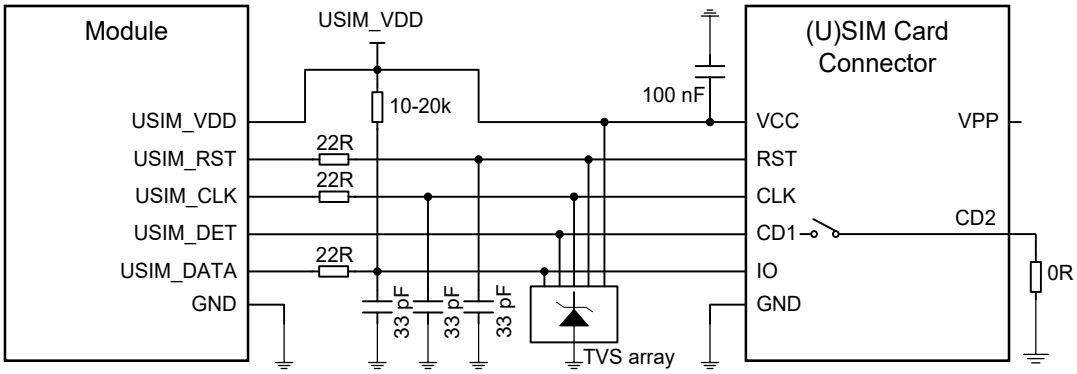

NOTE:
All these resistors, capacitors and ESD should be close to (U)SIM card connector in PCB layout.

Figure 15: Reference Circuit for Normally Open (U)SIM Card Connector

4.1.5. (U)SIM Card Connector Without Hot-Plug

If the (U)SIM card detection function is not needed, please keep USIM_DET unconnected. A reference circuit for the (U)SIM card interface with a 6-pin (U)SIM card connector is illustrated by the following figure.

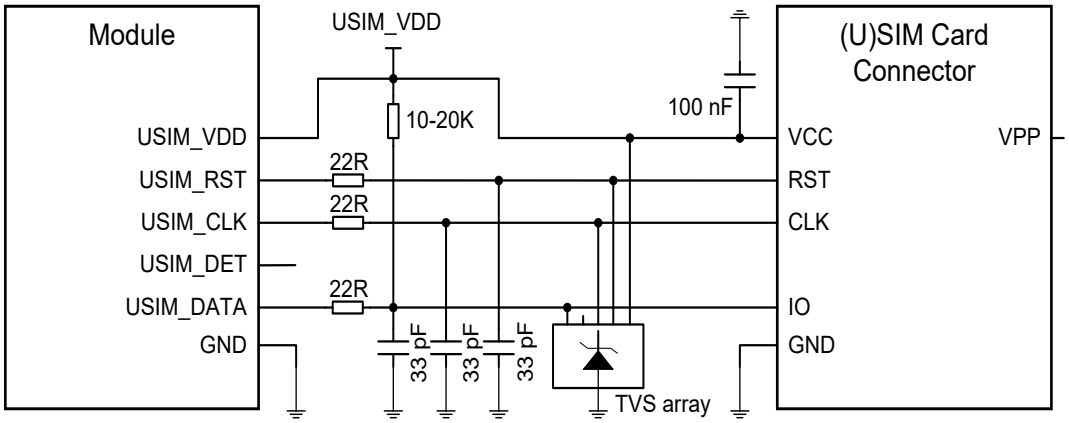

Note: All these resistors, capacitors and TVS array should be close to (U)SIM card connector in PCB layout.

Figure 16: Reference Circuit for a 6-Pin (U)SIM Card Connector

4.1.6. (U)SIM2 Card Connector

The module provides two (U)SIM interfaces. (U)SIM1 interface is used for external (U)SIM card only, and (U)SIM2 interface is used for external (U)SIM card or internal eSIM card.

It should be noted that when the (U)SIM2 interface is used for an external (U)SIM card, the circuits are the same as those of (U)SIM1 interface. When the (U)SIM2 interface is used for the internal eSIM card, pins 40, 42, 44, 46 and 48 of the module must be kept open.

A recommended compatible design for the (U)SIM2 interface is shown below.

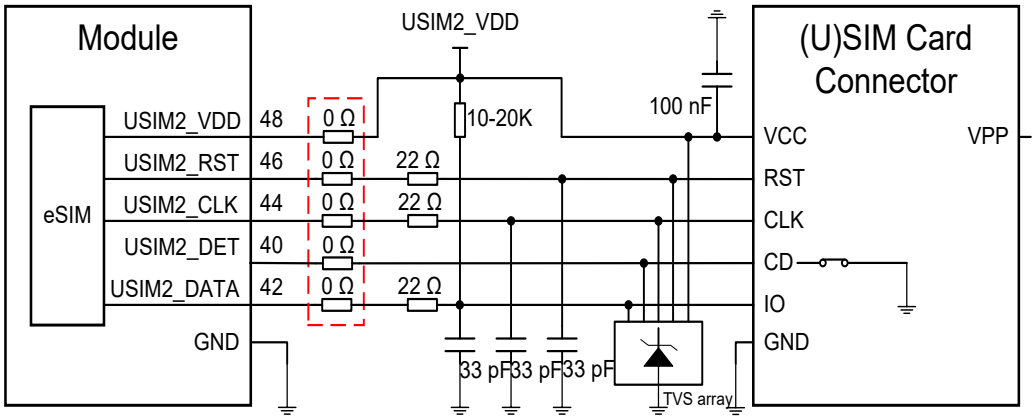

Note: The five 0 Ω resistors must be close to M.2 socket connector, and all other components should be close to (U)SIM card connector in PCB layout.

Figure 17: Recommended Compatible Design for (U)SIM2 Interface

4.1.7. (U)SIM Design Notices

To enhance the reliability and availability of the (U)SIM card in applications, please follow the criteria below in (U)SIM circuit design.

- Place the (U)SIM card connector as close to the module as possible. Keep the trace length less than 200 mm.
- Keep (U)SIM card signals away from RF and VCC traces.
- Ensure the ground between the module and the (U)SIM card connector is short and wide. Keep the trace width of ground and USIM_VDD no less than 0.5 mm to maintain the same electric potential.
- To avoid cross-talk between USIM_DATA and USIM_CLK, keep them away from each other and shield them with surrounded ground.
- To offer better ESD protection, add a TVS array of which the parasitic capacitance should be not higher than 10 pF. Add 22 Ω resistors in series between the module and the (U)SIM card connector to suppress EMI such as spurious transmission. The 33 pF capacitors are used to filter out RF interference. Additionally, keep the (U)SIM peripheral circuit close to the (U)SIM card connector.
- For USIM_DATA, a 10–20 kΩ pull-up resistor must be added near the (U)SIM card connector.

4.2. USB Interface

The module provides one integrated Universal Serial Bus (USB) interface which complies with the USB 3.0 and 2.0 specifications and supports super speed (5 Gbps) on USB 3.0 and high speed (480 Mbps) and full speed (12 Mbps) modes on USB 2.0. The USB interface is used for AT command communication, data transmission, GNSS NMEA sentence output, software debugging, firmware upgrade (USB 2.0 only), and voice over USB*.

Table 14: Pin Definition of USB Interface

Pin No.	Pin Name	I/O	Description	Comment
7	USB_DP	AIO	USB differential data (+)	Require differential impedance of 90 Ω
9	USB_DM	AIO	USB differential data (-)	
29	USB_SS_TX_M	AO	USB 3.0 super-speed transmit (-)	
31	USB_SS_TX_P	AO	USB 3.0 super-speed transmit (+)	
35	USB_SS_RX_M	AI	USB 3.0 super-speed receive (-)	
37	USB_SS_RX_P	AI	USB 3.0 super-speed receive (+)	

For more details about the USB 3.0 and 2.0 specifications, please visit http://www.usb.org/home.

The following figure presents a reference circuit for the USB 3.0 and 2.0 interface.

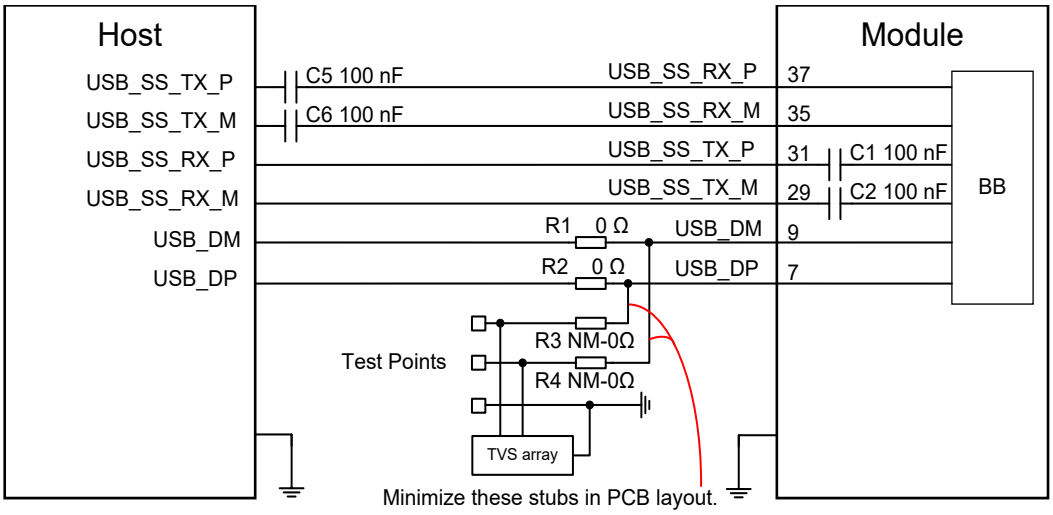

Figure 18: Reference Circuit for the USB 3.0 and 2.0 Interface

AC coupling capacitors C5 and C6 must be placed close to the host and close to each other. C1 and C2 have been integrated inside the module, so do not place these two capacitors on your schematic and PCB. To ensure the signal integrity of USB 2.0 data traces, R1, R2, R3 and R4 must be placed close to the module, and the stubs must be minimized in PCB layout.

Please follow the principles below when designing for the USB interface to meet USB 3.0 and 2.0 specifications:

- Route the USB signal traces as differential pairs with ground surrounded. The impedance of differential trace of USB 2.0 and USB 3.0 is 90 Ω.
- For USB 2.0 signal traces, the trace length should be less than 120 mm, and the differential data pair matching should be less than 2 mm. For USB 3.0 signal traces, length matching of each differential data pair (Tx/Rx) should be less than 0.7 mm, while the matching between Tx and Rx should be less than 10 mm.
- Do not route signal traces under crystals, oscillators, magnetic devices, other high-speed and RF signal traces. Route the USB differential traces in inner-layer of the PCB, and surround the traces with ground on that layer and with ground planes above and below.
- Junction capacitance of the ESD protection device might cause influences on USB data lines, so you should pay attention to the selection of the device. Typically, the stray capacitance should be less than 1.0 pF for USB 2.0, and less than 0.15 pF for USB 3.0.
- Keep the ESD protection devices as close to the USB connector as possible.
- If possible, reserve 0 Ω resistors on USB_DP and USB_DM traces respectively.

4.3. PCM Interface*

The module supports audio communication with external codec via Pulse Code Modulation (PCM) digital interface. The PCM interface supports the following modes:

- Primary mode (short frame synchronization): the module works as both master and slave
- Auxiliary mode (long frame synchronization): the module works as master only

In primary mode, the data is sampled on the falling edge of the PCM_CLK and transmitted on the rising edge. The PCM_SYNC falling edge represents the MSB. In this mode, the PCM interface supports 256 kHz, 512 kHz, 1024 kHz or 2048 kHz PCM_CLK at 8 kHz PCM_SYNC, and also supports 4096 kHz PCM_CLK at 16 kHz PCM_SYNC.

In auxiliary mode, the data is sampled on the falling edge of the PCM_CLK and transmitted on the rising edge. The PCM_SYNC rising edge represents the MSB. In this mode, PCM interface operates with a 256 kHz PCM_CLK and an 8 kHz, 50 % duty cycle PCM_SYNC only.

The module supports 16-bit linear data format. The following figures show the primary mode's timing relationship with 8 kHz PCM_SYNC and 2048 kHz PCM_CLK, as well as the auxiliary mode's timing

relationship with 8 kHz PCM_SYNC and 256 kHz PCM_CLK.

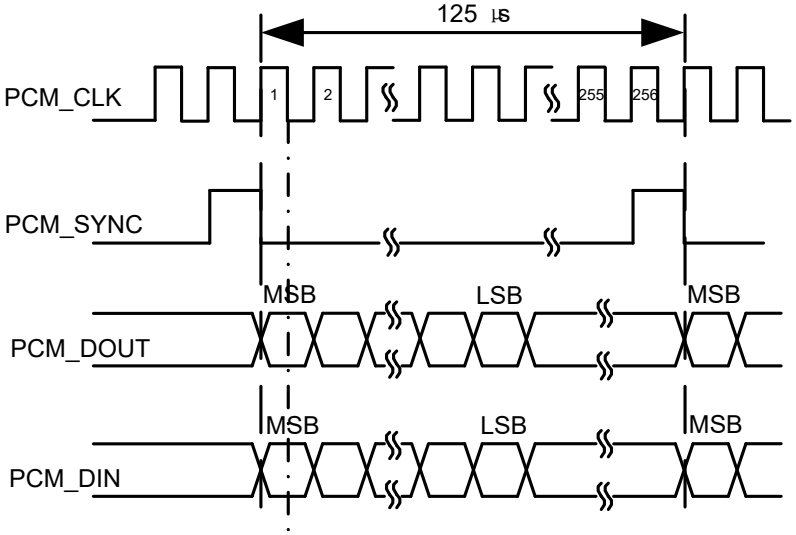

Figure 19: Primary Mode Timing

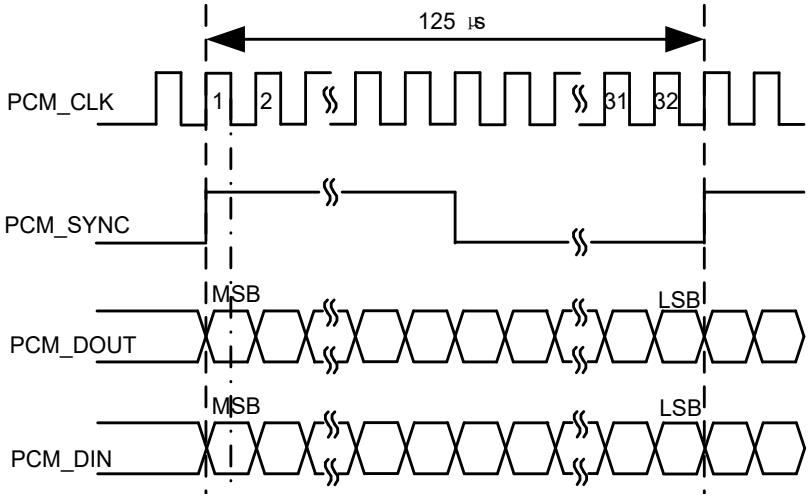

Figure 20: Auxiliary Mode Timing

The following table shows the pin definition of PCM interface which can be applied to audio codec design.

Table 15: Pin Definition of PCM Interface

Pin No.	Pin Name	I/O	Description	Comments
20	PCM_CLK	DIO, PD	PCM clock	1.8 V
22	PCM_DIN	DI, PD	PCM data input	1.8 V

24	PCM_DOUT	DO, PD	PCM data output	1.8 V
28	PCM_SYNC	DIO, PD	PCM data frame sync	1.8 V

The clock and mode can be configured by AT command, and the default configuration is master mode using short frame synchronization format with 2048 kHz PCM_CLK and 8 kHz PCM_SYNC. See ***document [4]*** for details about **AT+QDAI** command.

4.4. Control and Indication Interfaces*

Table 16: Pin Definition of Control and Indication Interfaces

Pin No.	Pin Name	I/O	Description	Comments
8	W_DISABLE1#	DI, PU	Airplane mode control. Active LOW.	V_{IH}min = 1.8 V V_{IL}max = 0.4 V V_{IL}min = -0.4 V
10	WWAN_LED#	OD	RF status indication LED. Active LOW.	VCC
23	WAKE_ON_WAN#	OD	Wake up the host. Active LOW.	1.8/3.3V
25	DPR	DI, PU	Dynamic power reduction. High voltage level by default.	1.8 V
26	W_DISABLE2#	DI, PU	GNSS disable control. Active LOW.	V_{IH}min = 1.8 V V_{IL}max = 0.4 V V_{IL}min = -0.4 V
60	WLAN_PA_EN	DI	Self-protection of QLN control	1.8V

4.4.1. W_DISABLE1#

The module provides a W_DISABLE1# pin to disable or enable airplane mode through hardware operation. W_DISABLE1# is pulled up by default. Driving it low will set the module to airplane mode. In airplane mode, the RF function will be disabled.

The RF function can also be enabled or disabled through software AT commands. The following table shows the RF function status of the module.

Table 17: RF Function Status

W_DISABLE# Logic Level	AT Command	RF Function Status	Operating Modes
High Level	**AT+CFUN=1**	Enabled	Full functionality mode
	AT+CFUN=0	Disabled	Minimum functionality mode
	AT+CFUN=4	Disabled	Airplane mode
Low Level	**AT+CFUN=0** **AT+CFUN=1** **AT+CFUN=4**	Disabled	Airplane mode

4.4.2. W_DISABLE2#

The module provides a W_DISABLE2# pin to disable or enable the GNSS function. The W_DISABLE2# pin is pulled up by default. Driving it low will disable the GNSS function. The combination of W_DISABLE2# pin and AT commands can control the GNSS function.

Table 18: GNSS Function Status

W_DISABLE2# Level	AT Commands	GNSS Function Status
High Level	**AT+QGPS=1**	Enabled
High Level	**AT+QGPSEND**	Disabled
Low Level	**AT+QGPS=1**	
Low Level	**AT+QGPSEND**	

A simple level shifter based on diodes is used on W_DISABLE1# pin and W_DISABLE2# pin which are pulled up to a 1.8 V voltage in the module, as shown in the following figure. So, the control signals (GPIO) of the host device could be at 1.8 V or 3.3 V voltage level. W_DISABLE1# and W_DISABLE2# are active low signals, and a reference circuit is shown as below.

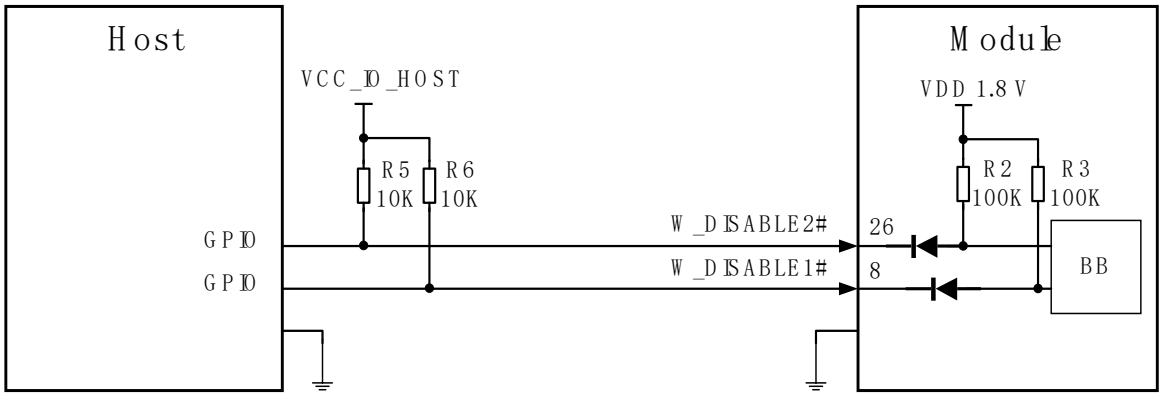

NOTE: The voltage level of VCC_IO_HOST could be 1.8 V or 3.3 V typically.

Figure 21: W_DISABLE1# and W_DISABLE2# Reference Circuit

4.4.3. WWAN_LED#

The WWAN_LED# signal is used to indicate RF status of the module, and its sink current is up to 10 mA.

To reduce power consumption of the LED, a current-limited resistor must be placed in series with the LED, as illustrated in the figure below. The LED is ON when the WWAN_LED# signal is at low level.

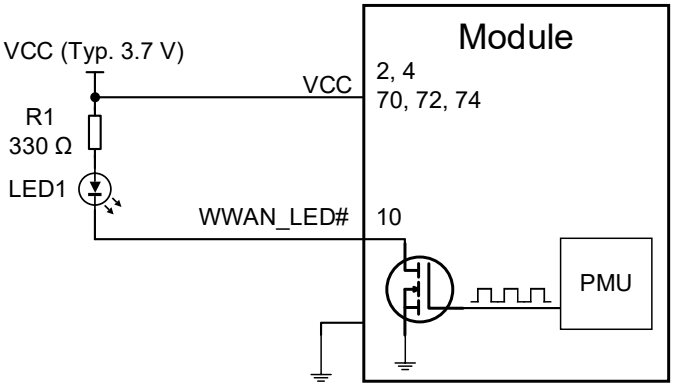

Figure 22: WWAN_LED# Reference Circuit

The following table shows the RF status indicated by WWAN_LED#.

Table 19: Network Status Indications of WWAN_LED#

WWAN_LED# Level	Description
Low Level (LED On)	RF function is turned on

High Level (LED Off)	RF function is turned off if any of the following occurs: ● The (U)SIM card is not powered. ● W_DISABLE1# is at low level (airplane mode enabled). ● **AT+CFUN=4** (RF function disabled).

4.4.4. WAKE_ON_WAN#

The WAKE_ON_WAN# is an open drain pin, which requires a pull-up resistor on the host. When a URC returns, a 1 s low level pulse signal will be outputted to wake up the host. The module operation status indicated by WAKE_ON_WAN# is shown below.

Table 20: State of the WAKE_ON_WAN#

WAKE_ON_WAN# State	Module Operation Status
Output a 1 s low level pulse signal	Call/SMS/Data is incoming (to wake up the host)
Always at high level	Idle/Sleep

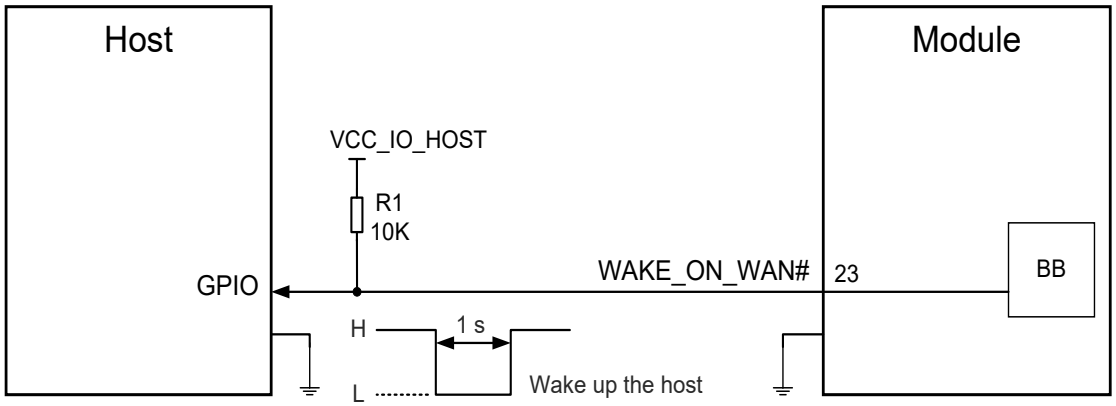

NOTE: The voltage level on VCC_IO_HOST relies on the host side due to the open drain in pin 23.

Figure 23: WAKE_ON_WAN# Signal Reference Circuit

4.4.5. DPR

The module provides the DPR pin for body SAR detection. The signal is sent from a host system proximity sensor to the module to provide an input trigger, which will reduce the output power in radio transmission.

Table 21: Function of the DPR Signal

DPR Level	Function
High/Floating	Max transmitting power will NOT backoff.
Low	Max transmitting power backoff by SAR efs file configure.

4.4.6. WLAN_PA_EN

QLN enables self-protection circuit (integrated inside QLN) when WLAN_PA_EN is at HIGH level.

- In LTE mode, WLAN_PA_EN is set to 0 (low level) by default.
- When WLAN_PA_EN is set to 1 (high level), the LNA will be in self-protection mode.

Table 22: Pin definition of WLAN_PA_EN

Pin No.	Pin Name	I/O	Description	Comment
60	WLAN_PA_EN	DI, PD	Self-protection of QLN control	1.8 V power domain

4.5. Cellular/WLAN COEX Interface*

The module provides the cellular/WLAN COEX interface, the following table shows the pin definition of this interface.

Table 23: Pin Definition of COEX Interface

Pin No.	Pin Name	I/O	Description	Comment
62	COEX_RXD	DI, PD	LTE/WLAN coexistence receive	1.8 V
64	COEX_TXD	DO, PD	LTE/WLAN coexistence transmit	1.8 V

4.6. Configuration Pins

Table 24: List of EM060K-GL and EM120K-GLConfiguration Pins

Config_0 (Pin 21)	Config_1 (Pin 69)	Config_2 (Pin 75)	Config_3 (Pin 1)	Module Type and Main Host Interface	Port Configuration
GND	GND	NC	NC	WWAN–USB3.0	2

Table 25: Pin Definition of EM060K-GL and EM120K-GL Configuration Pins

Pin No.	Pin Name	I/O	Description	Comment
21	CONFIG_0	DO	Connected to GND internally	
69	CONFIG_1	DO	Connected to GND internally	
75	CONFIG_2	DO	Not connected internally	
1	CONFIG_3	DO	Not connected internally	

The following figure shows a reference circuit for these four pins.

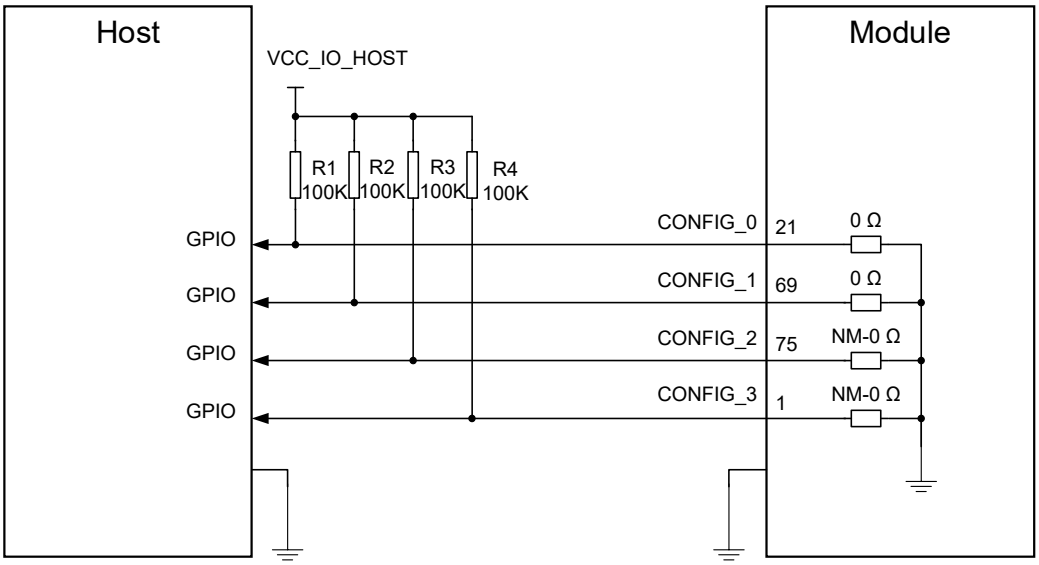

NOTE: The voltage level VCC_IO_HOST depends on the host side, and could be a 1.8 V or 3.3 V voltage level.

Figure 24: Recommended Circuit of EM060K-GL and EM120K-GL Configuration Pins

5 Antenna Interfaces

5.1. Cellular Network

5.1.1. Antenna Interfaces & Frequency Bands

The module provides Main, Rx-diversity/GNSS antenna connectors which are used to resist the fall of signals caused by high-speed movement and multipath effect. The impedance of antenna ports is 50 Ω.

Table 26: EM060K-GL and EM120K-GL Pin Definition

Pin Name	I/O	Description	Comment
ANT0	AIO	Main Antenna interface: ● LTE: TRx ● WCDMA: TRx	50 Ω impedance
ANT1	AI	Rx-diversity/GNSS Antenna interface: ● LTE: DRx ● WCDMA: DRx ● GNSS: GPS/GLONASS/Galileo/BDS	50 Ω impedance

5.1.2. Antenna Tuner Control Interface*

ANTCTL [0:3] and RFFE interface are used for antenna tuner control and should be routed to an appropriate antenna control circuit. More details about the interface will be added in the future version of this document.

5.1.2.1. Antenna Tuner Control Interface through GPIOs

Table 27: Pin Definition of Antenna Tuner Control Interface through GPIOs

Pin No.	Pin Name	I/O	Description	Comment
59	ANTCTL0	DO, PD	Antenna GPIO Control	1.8 V

61	ANTCTL1	DO, PD		1.8 V
63	ANTCTL2	DO, PD		1.8 V
65	ANTCTL3	DO, PD		1.8 V

5.1.2.2. Antenna Tuner Control Interface through RFFE

Table 28: Pin Definition of Antenna Tuner Control Interface through RFFE

Pin No.	Pin Name	I/O	Description	Comment
56	RFFE_CLK	DO, PD	Used for external MIPI IC control	1.8 V
58	RFFE_DATA	DIO, PD	Used for external MIPI IC control	1.8 V

NOTE

If RFFE_CLK and RFFE_DATA is required, please contact Quectel for more details.

5.1.3. Operating Frequency

Table 29: Operating Frequencies of EM060K-GL and EM120K-GL

3GPP Band	Transmit	Receive	Unit
WCDMA B1 Disabled	1920–1980	2110–2170	MHz
WCDMA B2	1850–1910	1930–1990	MHz
WCDMA B3 Disabled	1710–1785	1805–1880	MHz
WCDMA B4	1710–1755	2110–2155	MHz
WCDMA B5	824–849	869–894	MHz
WCDMA B6 Disabled	830–840	875–885	MHz
WCDMA B8 Disabled	880–915	925–960	MHz
WCDAM B19 Disabled	830–845	875–890	MHz
LTE-FDD B1 Disabled	1920–1980	2110–2170	MHz

LTE-FDD B2	1850–1910	1930–1990	MHz
LTE-FDD B3 Disabled	1710–1785	1805–1880	MHz
LTE-FDD B4	1710–1755	2110–2155	MHz
LTE-FDD B5	824–849	869–894	MHz
LTE-FDD B7	2500–2570	2620–2690	MHz
LTE-FDD B8 Disabled	880–915	925–960	MHz
LTE-FDD B12	699–716	729–746	MHz
LTE-FDD B13	777–787	746–756	MHz
LTE-FDD B14	788–798	758–768	MHz
LTE-FDD B17	704–716	734–746	MHz
LTE-FDD B18 Disabled	815–830	860–875	MHz
LTE-FDD B19 Disabled	830–845	875–890	MHz
LTE-FDD B20 Disabled	832–862	791–821	MHz
LTE-FDD B25	1850–1915	1930–1995	MHz
LTE-FDD B26	814–849	859–894	MHz
LTE-FDD B28 Disabled	703–748	758–803	MHz
LTE-FDD B29 [9] Disabled	-	717–728	MHz
LTE-FDD B30	2305–2315	2350–2360	MHz
LTE-FDD B32 [9] Disabled	-	1452–1496	MHz
LTE-FDD B66	1710–1780	2110–2200	MHz
LTE-FDD B71 Disabled	663-698	617-652	MHZ
LTE-TDD B34 Disabled	2010-2025	2010-2025	MHZ
LTE-TDD B38	2570–2620	2570–2620	MHz
LTE-TDD B39 Disabled	1880–1920	1880–1920	MHz
LTE-TDD B40 Disabled	2300–2400	2300–2400	MHz

LTE-TDD B41	2496–2690	2496–2690	MHz
LTE-TDD B42 Disabled	3400–3600	3400–3600	MHz
LTE-TDD B43 Disabled	3600–3800	3600–3800	MHz
LTE-TDD B46 [9] Disabled	-	5150–5925	MHz
LTE-TDD B48 Disabled	3550–3700	3550–3700	MHz

5.2. Antenna Connectors

5.2.1. Antenna Connector Size

Standard 2 mm × 2 mm receptacle antenna connectors are mounted for convenient antenna connection. The antenna connector's PN is IPEX 20449-001E, and the connector dimensions are illustrated as below:

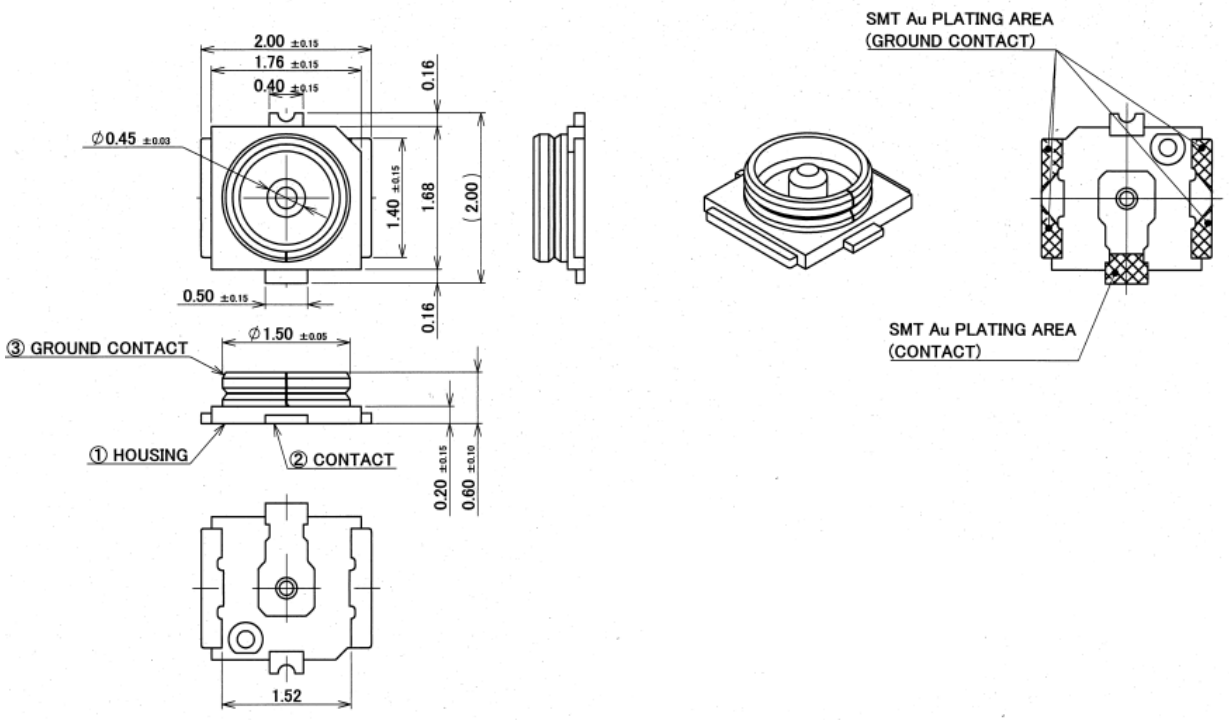

Figure 25: Dimensions of the Receptacle (Unit: mm)

Table 35: Major Specifications of the RF Connectors

Item	Specification
Nominal Frequency Range	DC to 6 GHz
Nominal Impedance	50 Ω
Temperature Rating	-40 to +85 °C
Voltage Standing Wave Ratio (VSWR)	Meet the requirements of: Max. 1.3 (DC–3 GHz) Max. 1.4 (3–6 GHz)

5.2.2. Antenna Connector Location

The antenna connector locations are shown below.

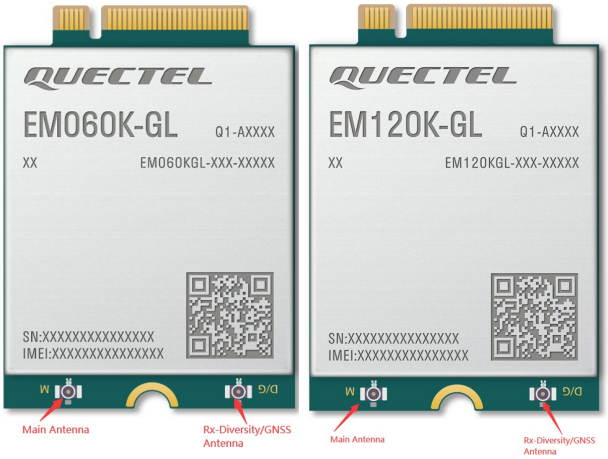

Figure 26: Antenna Connectors on the EM060K-GL and EM120K-GL

5.2.3. Antenna Connector Installation

The 2 mm × 2 mm connector dimensions are illustrated below:

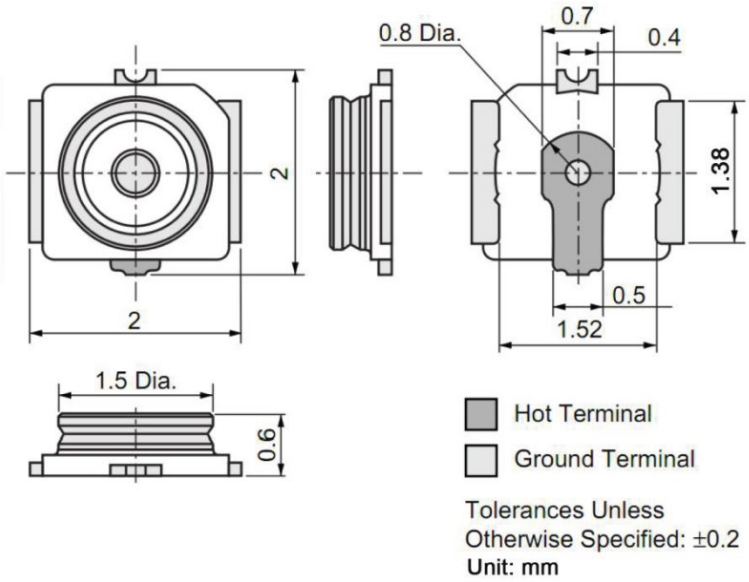

Figure 27: EM060K-GI and EM120K-GL RF Connector Dimensions (Unit: mm)

The receptacle RF connector used in conjunction with the module will accept two types of mating plugs that will meet a maximum height of 1.2 mm using a Ø 0.81 mm coaxial cable or a maximum height of

1.45 mm utilizing a Ø 1.13 mm coaxial cable.

The following figure shows the specifications of mating plugs using Ø 0.81 mm coaxial cables.

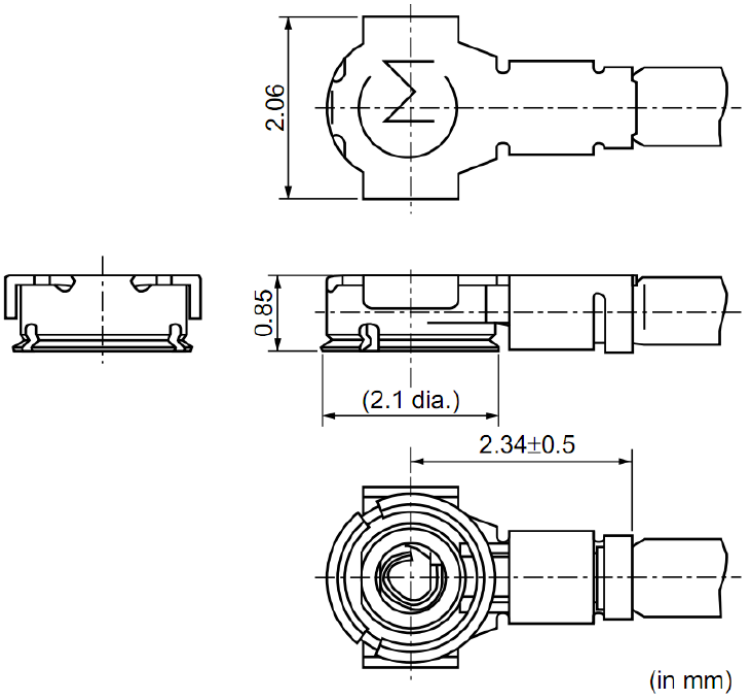

Figure 28: Dimensions of Mated Plugs (Ø0.81 mm Coaxial Cables) (Unit: mm)/

The following figure illustrates the connection between the receptacle RF connector on the module and the mating plug using a Ø 0.81 mm coaxial cable.

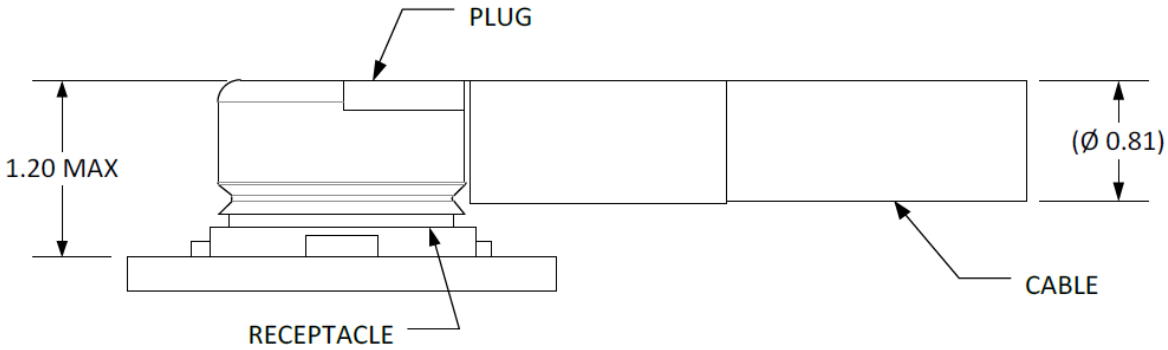

Figure 29: Space Factor of Mated Connectors (Ø0.81 mm Coaxial Cables) (Unit: mm)

The following figure illustrates the connection between the receptacle RF connector on the module and the mating plug using a Ø 1.13 mm coaxial cable.

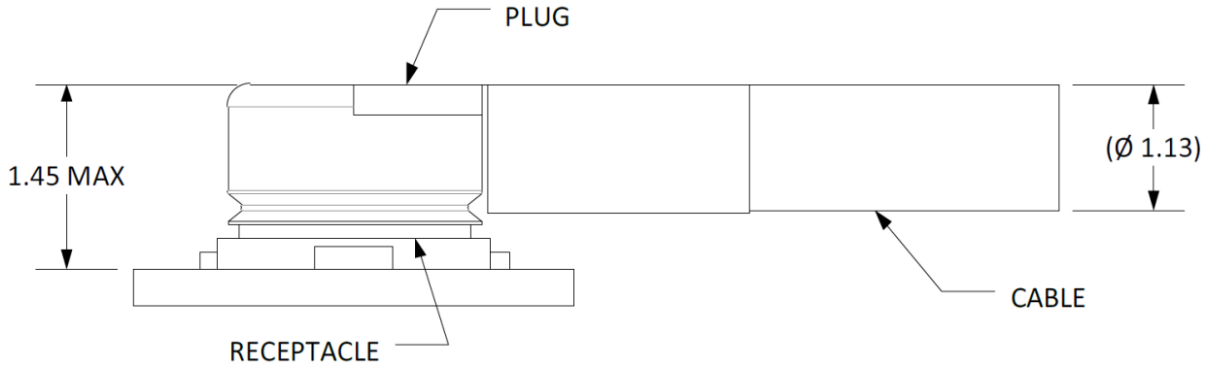

Figure 30: Space Factor of Mated Connectors (Ø 1.13 mm Coaxial Cables) (Unit: mm)

temperatures. When the IC chip reaches or exceeds the maximum junction temperature, the module may still work but the performance and function (such as RF output power, data rate, etc.) will be affected to a certain extent. Therefore, the thermal design should be maximally optimized to ensure all internal IC chips always work within the recommended operating temperature range.

The following principles for thermal consideration are provided for reference:

- Keep the module away from heat sources on your PCB, especially high-power components such as processor, power amplifier, and power supply.
- Maintain the integrity of the PCB copper layer and drill as many thermal vias as possible.
- Expose the copper in the PCB area where module is mounted.
- Apply a soft thermal pad with appropriate thickness and high thermal conductivity between the module and the PCB to conduct heat.
- Follow the principles below when the heatsink is necessary:
  - Do not place large size components in the area where the module is mounted on your PCB to reserve enough place for heatsink installation.
  - Attach the heatsink to the shielding cover of the module; In general, the base plate area of the heatsink should be larger than the module area to cover the module completely;
  - Choose the heatsink with adequate fins to dissipate heat;
  - Choose a TIM (Thermal Interface Material) with high thermal conductivity, good softness and good wettability and place it between the heatsink and the module;
  - Fasten the heatsink with four screws to ensure that it is in close contact with the module to prevent the heatsink from falling off during the drop, vibration test, or transportation.

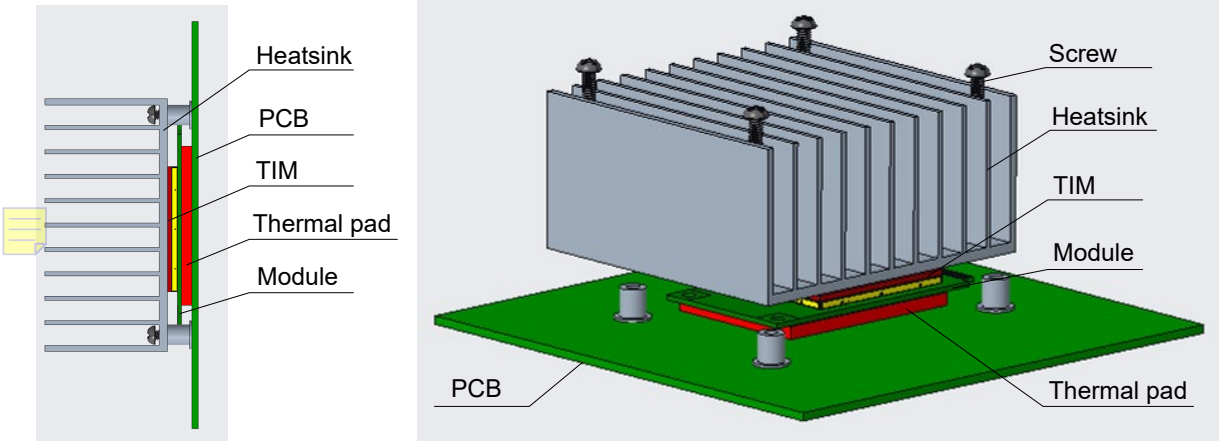

Figure 32: Placement and Fixing of the Heatsink

Table 47: Maximum Operating Temperature for Main Chips (Unit: °C)

BB	MCP	PMU	WTR	MMPA	PA	APT
85	85	85	85	100	85	85