ESTECH Co., Ltd. Rm 1015, World Venture Center II, 426-5 Gasan-dong, Guncheon-gu, Seoul, 158-803, Korea	MIC KOLAS VCI FC	**Electromagnetic Interference Test Report**

Compliance Test Report for FCC

Report Number		ESTF150511-001		
Applicant	Company name	LG Electronics USA		
	Address	1000 Sylvan Avenue Englewood Cliffs, NJ 07632		
	Telephone	201-266-2420 FAX :201-816-2003		
Product	Product name	PLASMA MONITOR		
	Model No.	42PM1M-UC	Manufacturer	LG Electronics Inc.
	Serial No.	NONE	Country of origin	KOREA
Test date	2005-10-27 ~2005-11-01		Date of issue	2005-11-01
Testing location	ESTECH. Co., Ltd. 97-1 Hoiuk-Ri Majang-Myon, Icheon-city, KyungKi-Do, Korea			
Standard	FCC PART 15 2002 , ANSI C 63.4 2003			
Test item	■ Conducted Emission	☐ Class A ■ Class B	Test result	OK
	■ Radiated Emission	☐ Class A ■ Class B	Test result	OK
Measurement facility registration number		94696		
Tested by	Engineer J.H.Kim	(Signature)		
Reviewed by	Manager Engineer J.M.Yang	(Signature)		
Abbreviation	OK, Pass = Passed, Fail = Failed, N/A = not applicable			

* Note

- This test report is not permitted to copy partly without our permission
- This test result is dependent on only equipment to be used
- This test result based on a single evaluation of one sample of the above mentioned

Contents

1. Laboratory Information 3

2. Description of EUT 4

3. Test Standards 5

4. Measurement condition 6

5. Measurement of radiated emission 8

5.1 Measurement equipment 8

5.2 Environmental conditions 8

5.3 Test data 9

6. Measurement of conducted emission 10

6.1 Measurement equipment 10

6.2 Environmental conditions 10

6.3 Test data 11

7. Photographs of test setup 12

8. Photographs of EUT 14

Appendix 1. Spectral diagram

Appendix 2. Phorographs of EUT in side PCB

Appendix 3. Block diagram of EUT

Appendix 4. Circuit Diagram

1. Laboratory Information

1.1 General

This EUT (Equipment Under Test) has been shown to be capable of compliance with the applicable technical standards and is tested in accordance with the measurement procedures as indicated in this report.
ESTECH Lab attests to accuracy of test data. All measurement reported herein were performed by ESTECH Co., Ltd.
ESTECH Lab assume full responsibility for the completeness of these measurements and vouch for the qualifications of all persons taking them.

1.2 Test Lab.

Corporation Name : ESTECH Co. Ltd

Head Office : Rm 1015, World Venture Center II, 426-5, Gasan-dong, Geumcheon-gu, Seoul, Kor
(Safety & Telecom. Test Lab)

EMC Test Lab : 58-1 Osan-Ri, GaNam-Myon, YeoJoo-Gun, KyungKi-Do, Korea
97-1 Hoiuk-Ri Majang-Myon, Icheon-city, KyungKi-Do, Korea

1.3 Official Qualification(s)

MIC : Granted Accreditation from Ministry of Information & Communication for EMC, Safety and Telecommunication
KOLAS : Accredited Lab By Korea Laboratory Accreditation Schema base on CENELEC requirements
FCC : Filed Laboratory at Federal Communications Commission
VCCI : Granted Accreditation from Voluntary Control Council for Interference from ITE

2. Description of EUT

2.1 Summary of Equipment Under Test

NONE : PLASMA MONITOR
Model Number : 42PM1M-UC
Serial Number : NONE
Manufacturer : LG Electronics Inc.
Country of origin : KOREA
Rating : INPUT:AC120V / 60Hz
Receipt Date : 2005-10-27

2.2 General descriptions of EUT

MODELS	42PM1M-UC
Width (inches / mm)	41.4 / 1050
Height (inches / mm)	24.8 / 630
Depth (inches / mm)	3.6 / 91.5
Weight (pounds / kg)	64 / 29
Resolution	852 x 480 (Dot)
Power requirement	AC100-240V, 50/60Hz
Operating Temperature Range	32 ~ 104°F (0 ~ 40°C)
Operating Humidity Range	Less than 80%

Monitor Display Specifications (RGB / HDMI mode)

Resolution	Horizontal Frequency(KHz)	Vertical Frequency(Hz)
640x350	31.468	70.09
	37.861	85.08
720x400	31.469	70.08
	37.927	85.03
640x480	31.469	59.94
	35.000	66.66
	37.861	72.80
	37.500	75.00
	43.269	85.00
848x480	31.500	60.00
	37.799	70.00
	39.375	75.00
852x480	31.500	60.00
	37.799	70.00
	39.375	75.00
800x600	35.156	56.25
	37.879	60.31
	48.077	72.18
	46.875	75.00
	53.674	85.06
832x624	49.725	74.55
1024x768	48.363	60.00
	56.476	70.06
	60.023	75.02
	68.677	85.00
1152x864	54.348	60.05
	63.995	70.01
	67.500	75.00
1152x870	68.681	75.06
1280x960	60.023	60.02
1280x1024	63.981	60.02

Using Freq. : 18.432MHz

3. Test Standards

Test Standard : FCC PART 15 (2002)

This Standard sets out the regulations under which an intentional, unintentional, or incidental radiator may be operated without an individual license. It also contains the technical specifications, administrative requirements and other conditions relating to the marketing of Part 15 devices.

Test Method : ANSI C 63.4 (2003)

This standard sets forth uniform methods of measurement of radio-frequency (RF) signals and noise emitted from both unintentional and intentional emitters of RF energy in the frequency range 9 kHz to 40 GHz. Methods for the measurement of radiated and AC power-line conducted radio noise are covered and may be applied to any such equipment unless otherwise specified by individual equipment requirements. These methods cover measurement of certain decides that deliberately radiate energy, such as intentional emitters, but does not cover licensed transmitters. This standard is not intended for certification/approval of avionic equipment or for industrial, scientific, and medical (ISM) equipment These method apply to the measurement of individual units or systems comprised of multiple units

4. Measurement Condition

4.1 EUT Operation.

* The EUT was in the following operation mode during all testing
* The operational conditions of the EUT was determined by the manufacturer according to the typical use of the EUT with respect to the expected hightest level of emission
* After seting as test arrangment diagram, we tested the EUT under continuous displaying "H" character and playing Audio out /Video

4.2 Configuration and Peripherals

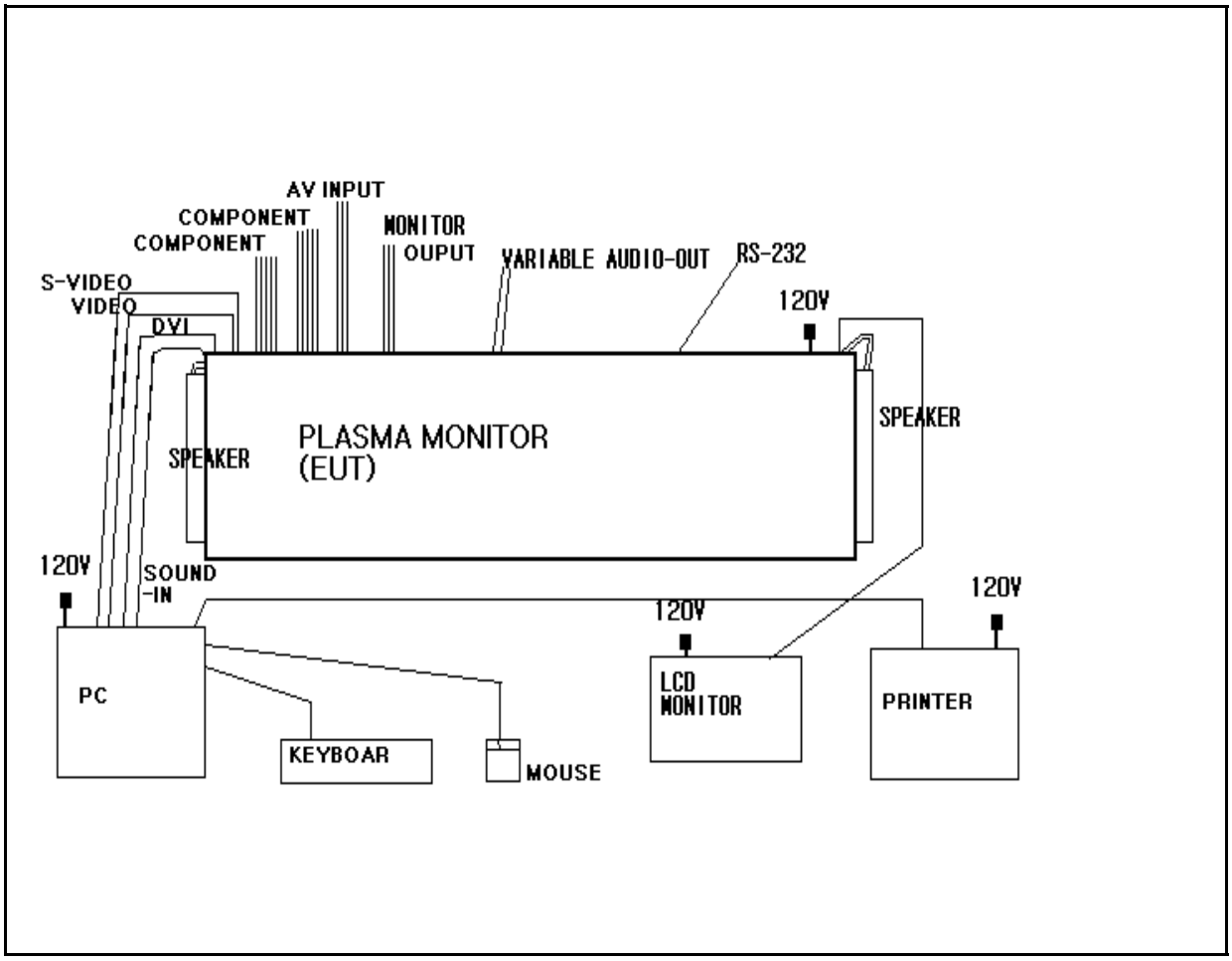

4.3 EUT and Support equipment

Equipment Name	Model Name	S/N	Manufacturer	Remark (FCC ID)
PLASMA MONITOR	42PM1M-UC	NONE	LG Electronics Inc.	EUT
PERSONAL COMPUTER	HP Pavilion m000	KRF35200YM	HP	-
PRINTER	LQ-570H+	B1021095782	Trigem Computer Inc.,	-
KEYBOARD	SEM-DT35	32006557	Samsung Electro-mechanics Co., Ltd.,	-
MOUSE	M-S48a	HCA31409057	Logitech	-
LCD Monitor	1704FPTL	56P	DELL	-
Speaker	AP-42SM10B	504MJ00105	LG Electronics Inc.	-
Speaker	AP-42SM10B	504MJ00105	LG Electronics Inc.	-

4.4 Cable Connecting

Start Equipment		End Equipment		Cable Standard		Remark
Name	I/O port	Name	I/O port	Length	Shielded	
PLASMA MONITOR	VIDEO	PERSONAL COMPUTER	VIDEO	2	Y	-
PLASMA MONITOR	S-VIDEO	PERSONAL COMPUTER	S-VIDEO	2	Y	-
PLASMA MONITOR	DVI	PERSONAL COMPUTER	DVI	2	Y	-
PLASMA MONITOR	LINE-IN	PERSONAL COMPUTER	LINE-OUT	2	N	-
PLASMA MONITOR	COMPONENT 1 (6 PORT)	-	-	2	N	-
PLASMA MONITOR	COMPONENT 2 (6 PORT)	-	-	2	N	-
PLASMA MONITOR	AV INPUT 1 (3 PORT)	-	-	2	N	-
PLASMA MONITOR	AV INPUT 2 (3 PORT)	-	-	2	N	-
PLASMA MONITOR	AV INPUT 3 (3 PORT)	-	-	2	N	-
PLASMA MONITOR	MONITOR OUTPUT (3PORT)	-	-	2	N	-
PLASMA MONITOR	VARIABLE AUDIO OUTPUT (2PORT)	-	-	2	N	-
PLASMA MONITOR	VIDEO OUPUT	LCD MONITOR	VIDEO INPUT	2	Y	-
PLASMA MONITOR	S-VIDEO	-	-	2	N	-
PLASMA MONITOR	RS-232	-	-	2	N	-
PLASMA MONITOR	SOUND OUT-R	SPEAKER	-	2	N	-
PLASMA MONITOR	SOUND OUT-L	SPEAKER	-	2	N	-
PERSONAL COMPUTER	PARALLEL	PRINTER	PARALLEL	2	Y	-
PERSONAL COMPUTER	PS/2 KEYBOARD	KEYBOARD	PS/2 KEYBOARD	2	N	-
PERSONAL COMPUTER	PS/2 MOUSE	MOUSE	PS/2 MOUSE	2	N	-

5. Measurement of radiated disturbance

Above 30 MHz Electric Field strength was measured in accordance with FCC Part 15 (2002) & ANSI C 63.4 (2003). The test setup was made according to FCC Part 15 (2002) & ANSI C 63.4 (2003) on an open test site, which allows a 3m distance measurement. The EUT was placed in the center of wooden turntable. The height of this table was 0.8m. The measurement was conducted with both horizontal and vertical antenna polarization. The turntable has fully rotated. For further description of the configuration refer to the picture of the test set-up.

5.1 Measurement equipments

Equipment Name	Type	Manufacturer	Serial No.	Next Calibration date
TEST Receive	ESPI7	Rohde & Schwarz	100185	2006. 8. 22
Spectrum Analyzer	R3261C	ADVANTEST	61720116	2006. 4. 10
LogBicon Antenna	VULB 9160	S/B	3107	2006. 5. 02
Horn Antenna	BBHA 9120 D	SCHWARZBECK	352	2006. 4. 06
Turn Table	2087	EMCO	2129	-
Antenna Mast	2070-01	EMCO	9702-203	-
ANT Mast Controller	2090	EMCO	1535	-
Turn Table Controller	2090	EMCO	1535	-

5.2 Environmental Condition

Test Place : Open site(3m)

Temperature (°C) : 18 ℃

Humidity (%) : 46 %

5.3 Test data

Measurement Distance : 3 m

Frequency (MHz)	Reading (dBμV)	Position (V/H)	Height (m)	Correction Factor		Result Value		
				Ant Factor (dB)	Cable (dB)	Limit (dBμV/m)	Result (dBμV/m)	Margin (dBμV/m)
34.56	19.10	V	1.0	12.28	0.9	40.0	32.29	-7.71
38.87	13.40	V	1.0	12.44	0.9	40.0	26.78	-13.22
74.92	15.70	H	2.4	11.06	1.3	40.0	28.07	-11.93
79.09	13.50	H	2.4	9.94	1.3	40.0	24.74	-15.26
108.01	11.40	H	2.0	10.38	1.5	43.5	23.29	-20.21
149.65	10.20	H	1.8	13.45	1.9	43.5	25.55	-17.95
166.42	10.80	H	1.6	13.93	2.0	43.5	26.74	-16.76
200.09	12.00	V	1.0	10.38	2.2	43.5	24.56	-18.94
216.00	16.70	H	1.4	10.72	2.3	43.5	29.69	-13.81
233.99	14.60	H	1.4	11.33	2.4	46.0	28.30	-17.70
243.01	16.70	V	1.0	11.78	2.4	46.0	30.89	-15.11
306.02	10.60	H	1.2	13.32	2.7	46.0	26.64	-19.36
324.00	24.90	H	1.1	13.74	2.8	46.0	41.40	-4.60
432.00	13.60	H	1.0	16.01	3.2	46.0	32.85	-13.15
540.00	18.20	H	1.0	17.68	3.7	46.0	39.53	-6.47
648.00	13.40	V	1.0	19.60	4.1	46.0	37.09	-8.91
702.00	15.40	H	1.0	20.18	4.3	46.0	39.86	-6.14
911.96	12.00	V	1.0	22.77	4.9	46.0	39.69	-6.31
Remark	H : Horizontal, V : Vertical TEST MODE ; Resolution 1280*1024 (60Hz) at DVI mode (Worse Case)							

5.3 Test data

Measurement Distance : 3 m

Frequency (MHz)	Reading (dBμV)	Position (V/H)	Height (m)	Correction Factor		Result Value		
				Ant Factor (dB)	Cable (dB)	Limit (dBμV/m)	Result (dBμV/m)	Margin (dBμV/m)
34.51	20.30	V	1.0	12.28	0.9	40.0	33.49	-6.51
59.08	21.90	V	1.0	12.44	1.1	40.0	35.46	-4.54
108.32	13.80	H	2.0	10.39	1.5	43.5	25.70	-17.80
137.83	20.50	V	1.0	12.72	1.7	43.5	34.96	-8.54
177.18	19.50	H	1.4	13.41	2.1	43.5	34.99	-8.51
216.55	17.20	H	1.3	10.73	2.3	46.0	30.21	-15.79
223.14	21.20	H	1.2	10.84	2.3	46.0	34.35	-11.65
249.34	13.80	H	1.1	11.92	2.4	46.0	28.16	-17.84
300.14	9.40	H	1.0	13.19	2.7	46.0	25.29	-20.71
342.53	10.30	H	1.0	14.14	2.8	46.0	27.28	-18.72
400.16	10.80	H	1.0	15.32	3.2	46.0	29.27	-16.73
533.31	8.20	H	1.0	17.56	3.6	46.0	29.38	-16.62
601.31	5.80	H	1.0	19.16	4.0	46.0	28.92	-17.08
666.29	6.60	V	1.0	19.80	4.2	46.0	30.55	-15.45
766.00	6.40	H	1.0	21.46	4.5	46.0	32.36	-13.64
900.36	8.40	V	1.0	22.59	4.9	46.0	35.84	-10.16
Remark	H : Horizontal, V : Vertical TEST MODE ; Resolution 1280*1024 (60Hz) at RGB mode (Worse Case)							

6. Measurement of conducted disturbance

The continuous disturbance voltage of AC Mains in the frequency from 0.15 to 30 MHz was measured in accordance to FCC Part 15 (2002) & ANSI C 63.4 (2003) The test setup was made according to FCC Part 15 (2002) & ANSI C 63.4 (2003) in a shielded. The EUT was placed on a non-conductive table at least 80 above the ground plan. A grounded vertical reference plane was positioned in a distance of 40cm from the EUT. The distance from the EUT to other metal surfaces was at least 0.8m. The EUT was only earthen by its power cord through the line impedance stabilizing network. The power cord has been bundled to a length of 1.0m.. The test receiver with Quasi Peak detector complies with CISPR 16.

6.1 Measurement equipments

Equipment Name	Type	Manufacturer	Serial No.	Next Calibration date
LISN	ESH3-Z5	Rohde & Schwarz	838979/010	2006. 2. 18
LISN	NNLA8120A	Schwarzbeck	NONE	2006. 2. 18
TEST Receive	ESPI7	Rohde & Schwarz	100185	2006. 8. 22
Pulse Limiter	ESH3Z2	Rohde & Schwarz	NONE	2006. 6. 15

6.2 Environmental Condition

Test Place : Shield Room

Temperature (°C) : 23 ℃

Humidity (%) : 32 %

6.3 Test data

Frequency (MHz)	Correction Factor		Line (H/N)	Quasi-peak Value			Average Value		
	Lisn (dB)	Cable (dB)		Limit (dBμV)	Reading (dBμV)	Result (dBμV)	Limit (dBμV)	Reading (dBμV)	Result (dBμV)
0.15	0.07	0.0	H	66.00	45.29	45.36	56.00	32.17	32.24
0.20	0.07	0.0	H	63.61	39.81	39.91	53.61	33.73	33.83
0.25	0.07	0.1	H	61.76	41.86	42.00	51.76	29.92	30.06
0.26	0.07	0.1	H	61.43	34.28	34.42	51.43		
0.39	0.07	0.1	H	58.06	30.77	30.99	48.06	29.08	29.30
0.49	0.07	0.2	H	56.17	33.13	33.40	46.17	29.13	29.40
0.75	0.09	0.2	H	56.00	42.51	42.80	46.00	30.29	30.58
1.25	0.10	0.2	H	56.00	44.74	45.06	46.00	32.43	32.75
2.00	0.11	0.3	H	56.00	44.14	44.55	46.00	31.08	31.49
2.50	0.13	0.3	H	56.00	46.35	46.78	46.00	33.46	33.89
3.00	0.14	0.3	H	56.00	45.13	45.57	46.00	31.84	32.28
3.50	0.16	0.3	H	56.00	47.51	47.97	46.00	34.11	34.57
6.00	0.24	0.4	H	60.00	36.05	36.64	50.00	23.25	23.84
8.00	0.31	0.5	H	60.00	32.94	33.71	50.00	20.41	21.18
11.75	0.45	0.7	H	60.00	37.06	38.18	50.00		
12.27	0.47	0.7	N	60.00	33.09	34.25	50.00		
13.22	0.52	0.7	N	60.00	37.94	39.19	50.00	33.86	35.11
13.25	0.52	0.7	H	60.00	38.41	39.66	50.00	27.28	28.53
20.82	0.72	0.8	H	60.00	34.59	36.13	50.00	29.87	31.41
Remark	H : Hot Line, N : Neutral Line								

7. Photographs of test setup

7.1 Setup for Radiated Test : 30 ~ 1000 MHz

[Front]

[Rear]

7.2 Setup for Conducted Test : 0.15 ~ 30 MHz

[Front]

[Rear]

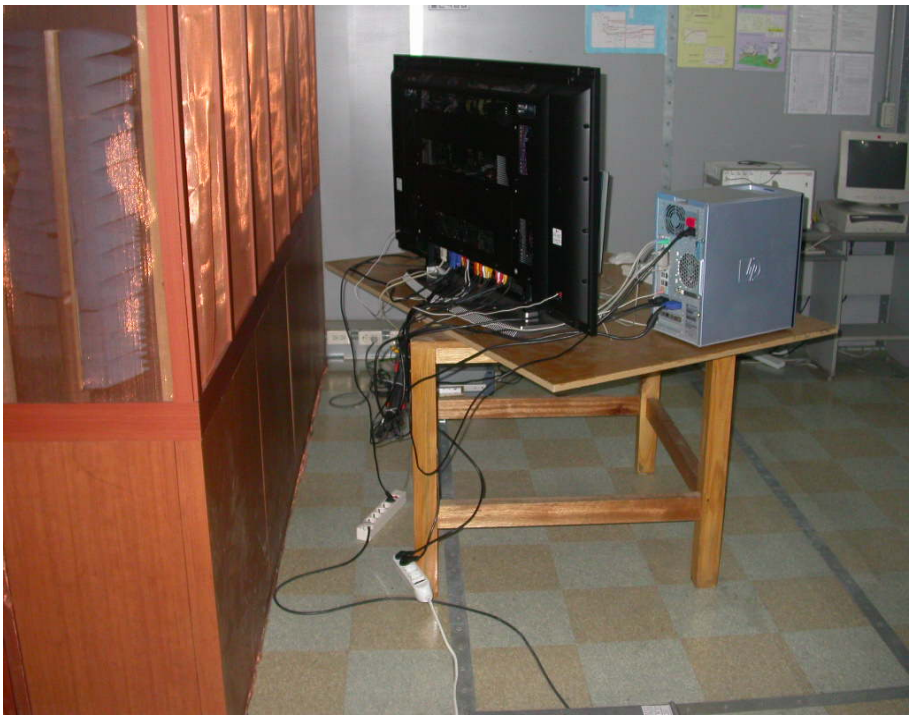

8. Photographs of EUT

[Front]

[Rear]

Appendix 1. Spectral diagram

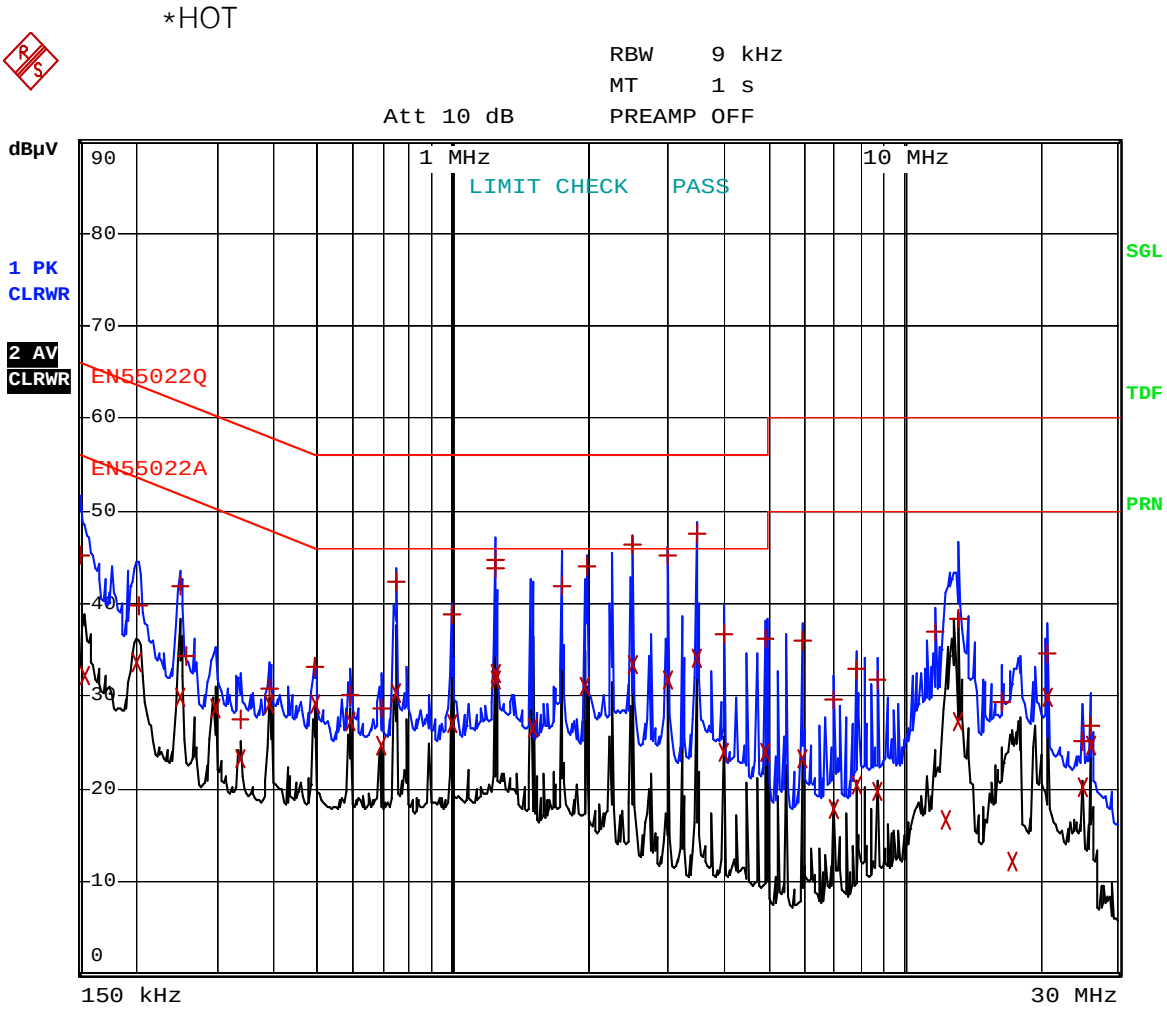

Comment: LG Electronics Inc_42PM1M-UC (DVI) HOT
Date: 31.OCT.2005 15:51:01

*NEUTRAL

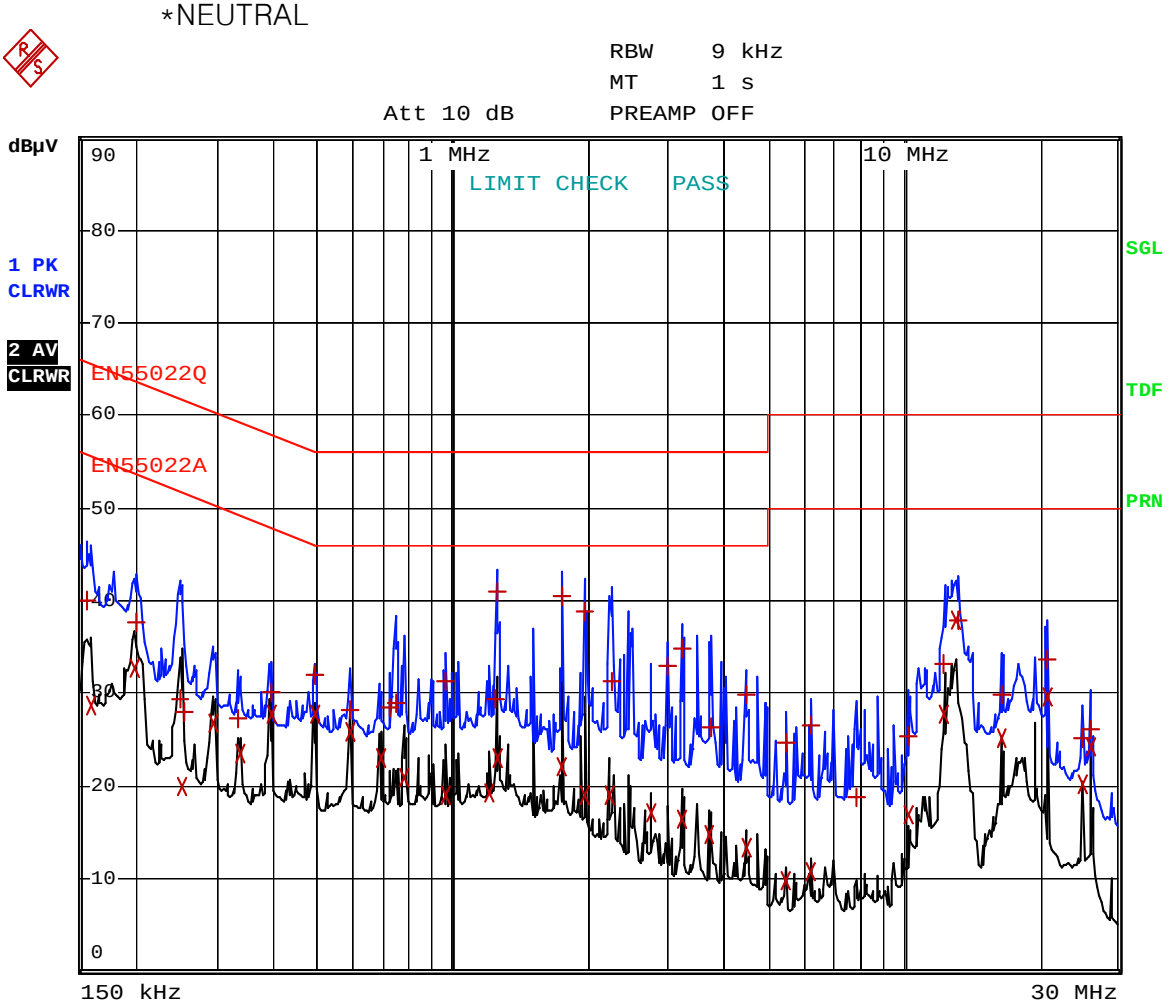

Comment: LG Electronics Inc_42PM1M-UC (DVI) NEUTRAL
Date: 31.OCT.2005 15:58:16

Appendix 2. Phorographs of EUT in side PCB

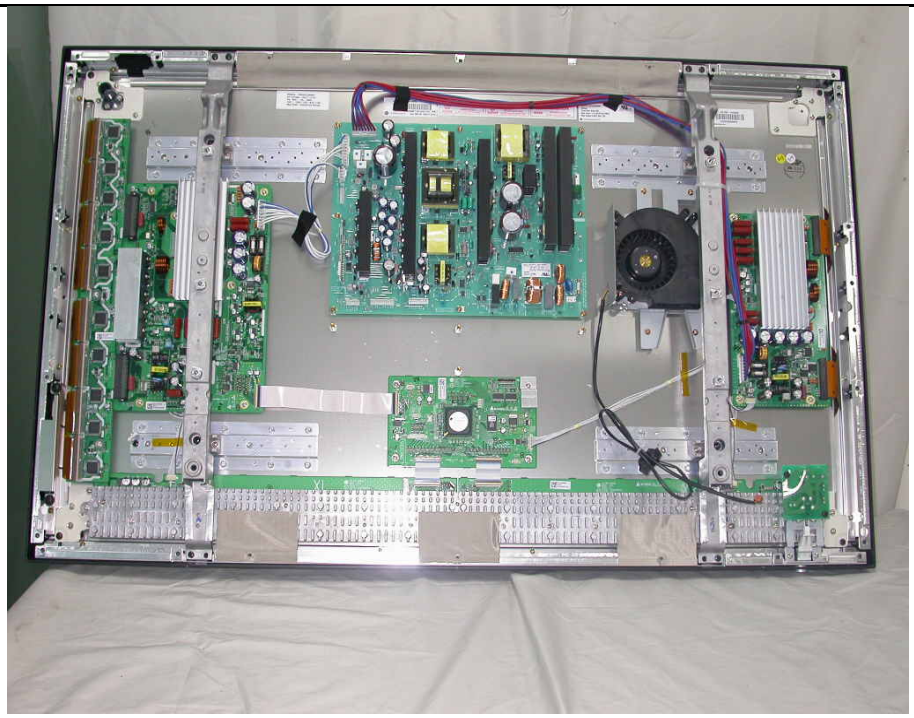

Appendix 3. Block diagram of EUT

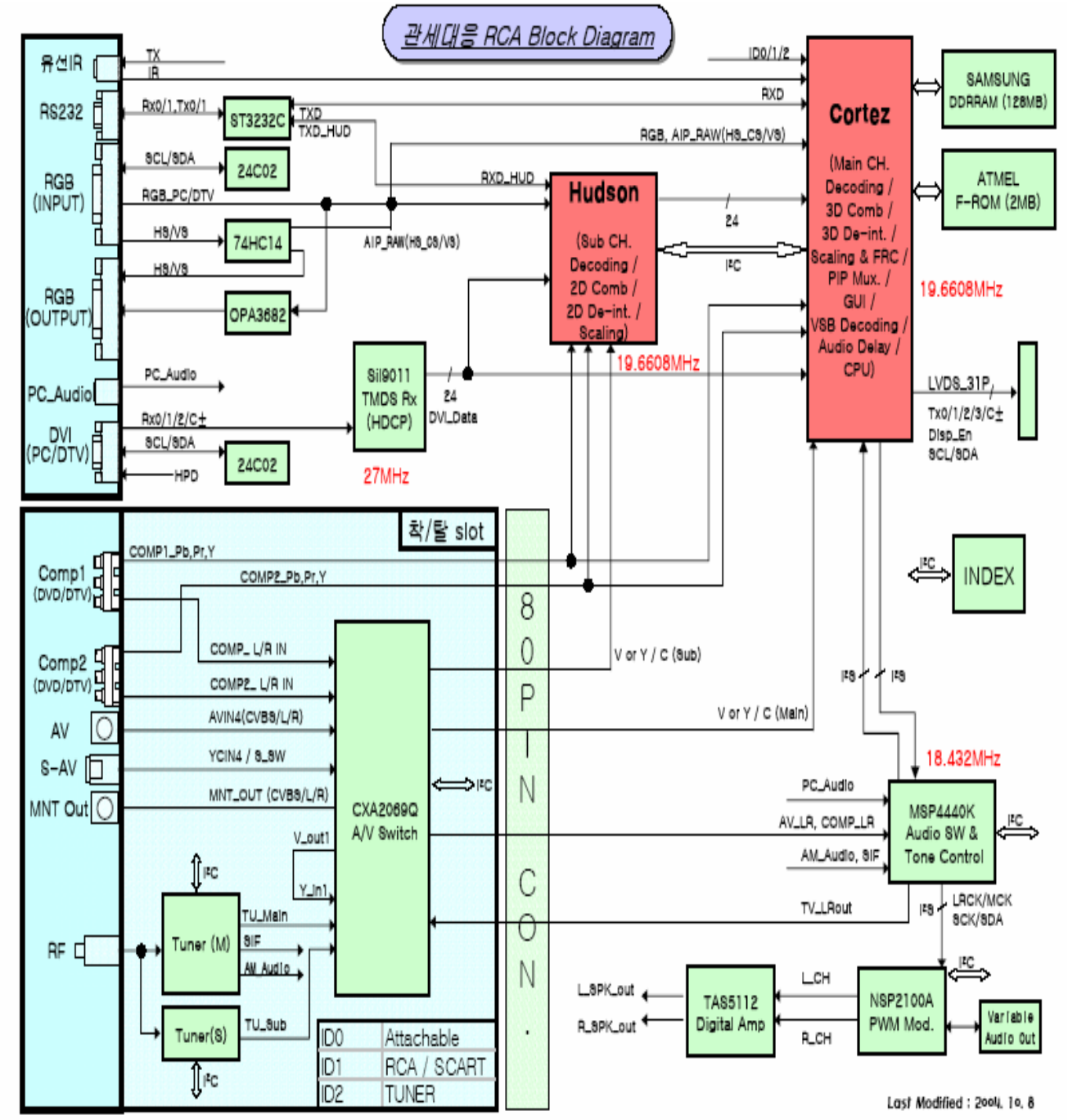

Appendix 4. Circuit Diagram