APPENDIX D

: BLOCK DIAGRAM

44SZ8D-UA Block Diagram

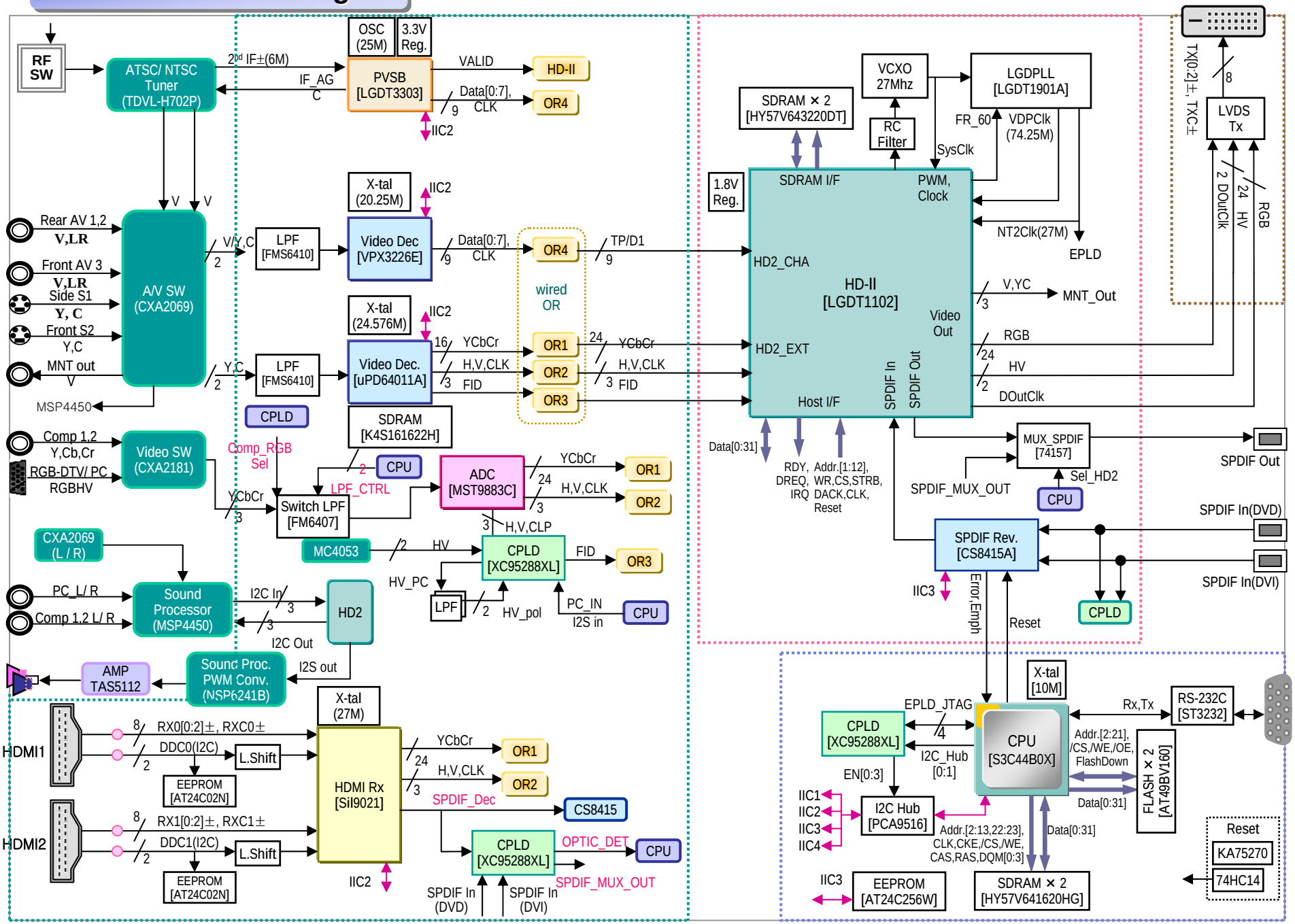
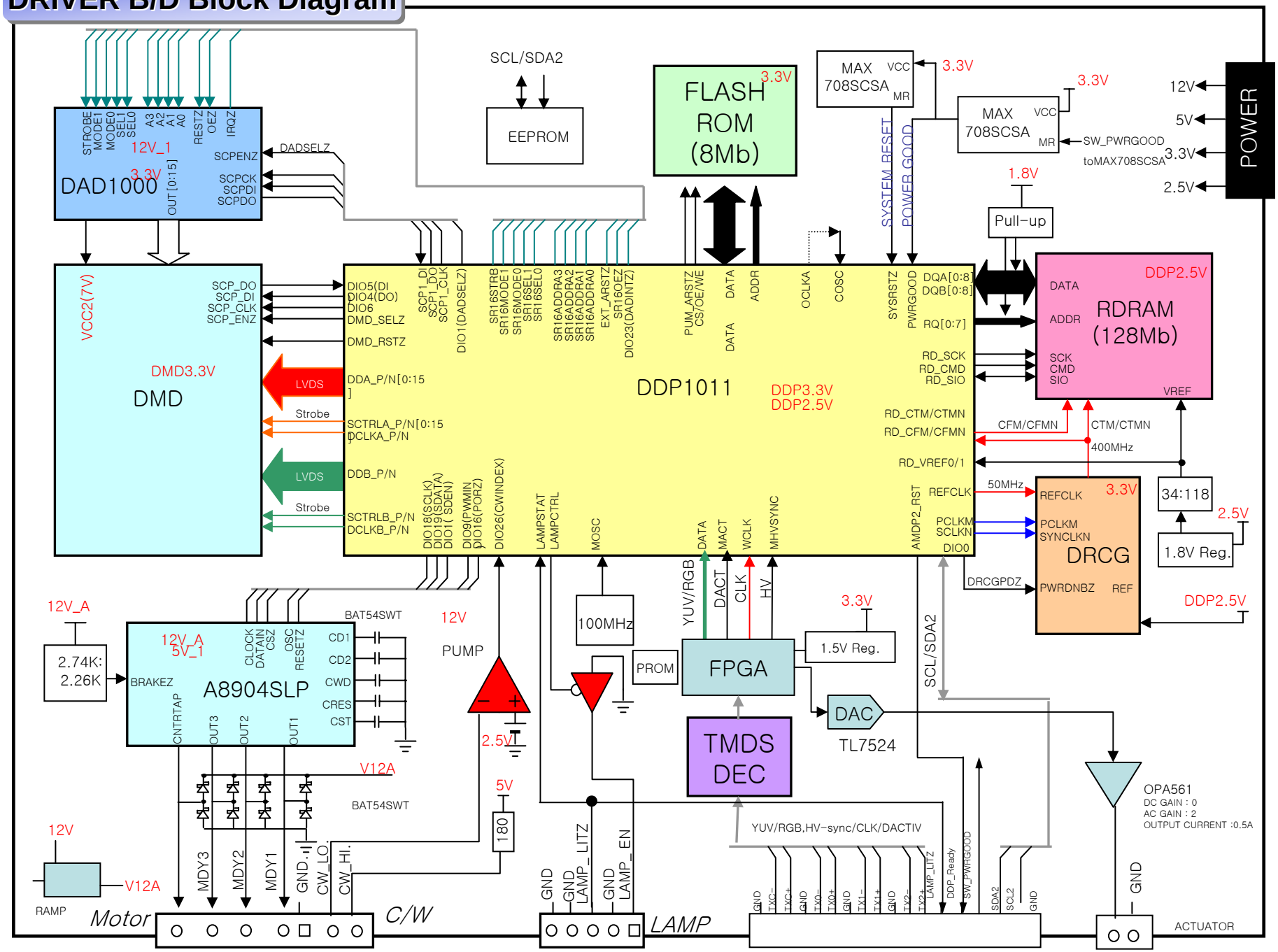
DRIVER B/D Block Diagram