APPENDIX D

: BLOCK DIAGRAM

52SZ8D-UA Block Diagram

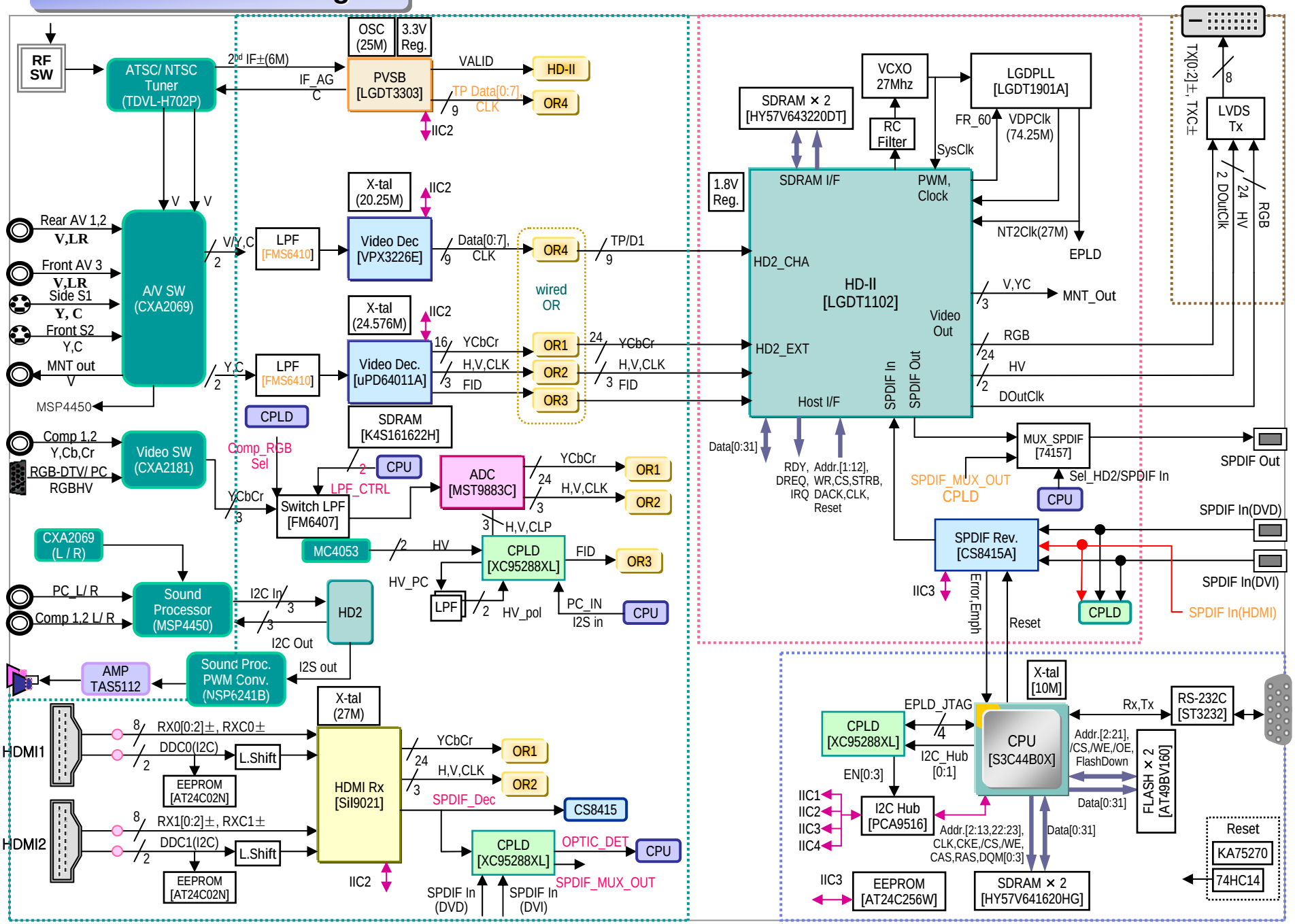

HD4 Driver 보드 Block Diagram

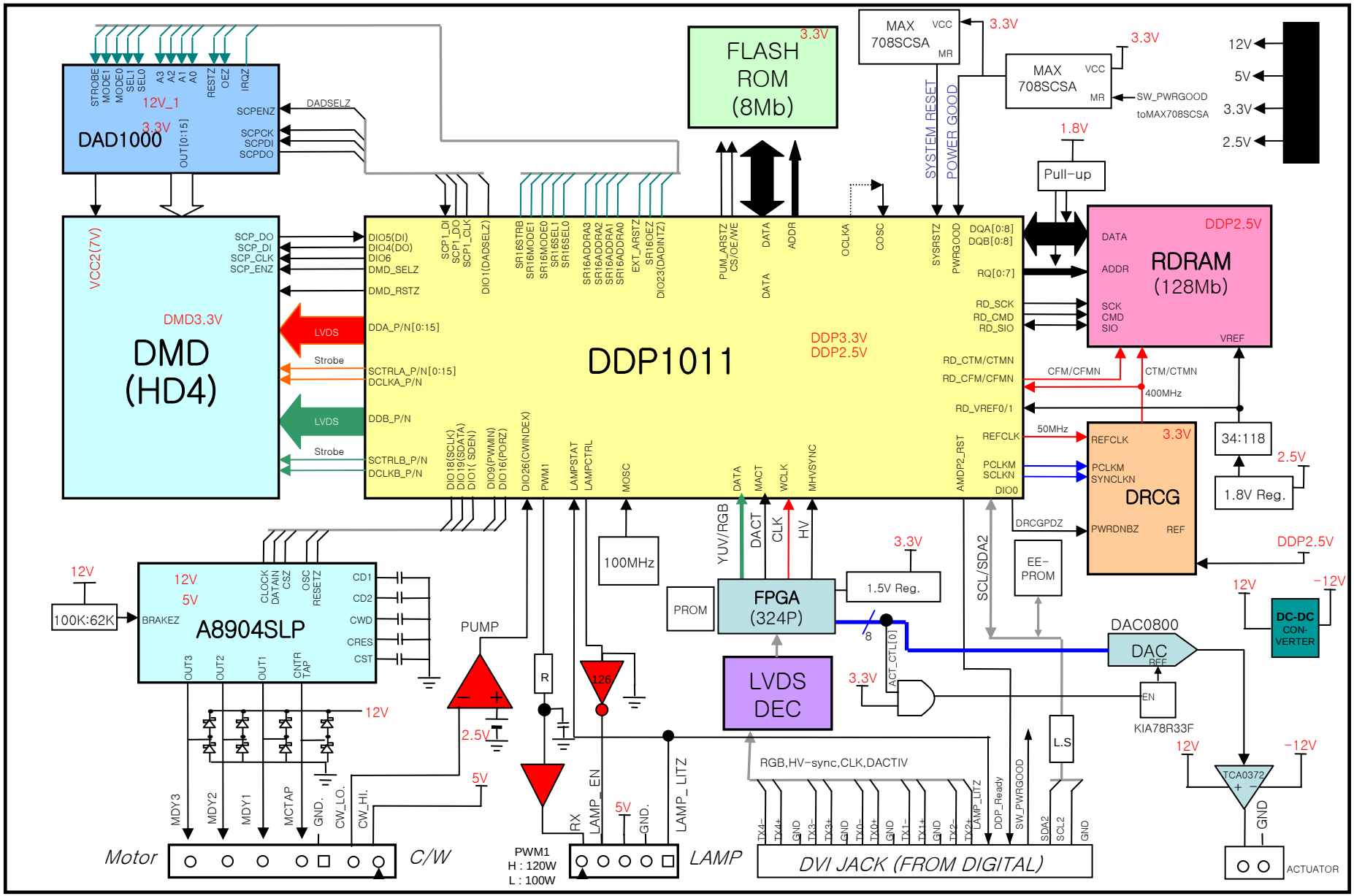

05/04/01