ESTECH Co., Ltd. Rm 1015, World Venture Center II, 426-5 Gasan-dong, Gumcheon-gu, Seoul, 158-803, Korea		Electromagnetic Interference Test Report

Test Report for FCC

FCC ID:BEJ55LH85UC

Report Number		ESTF150904-003		
Applicant	Company name	LG Electronics USA		
	Address	1000 Sylvan Avenue Englewood Cliffs, NJ 07632		
	Telephone	847-941-8373		
Product	Product name	LCD TV/MONITOR		
	Model name	55LH85-UC	Manufacturer	LG Electronics Inc.
	Serial number	NONE	Country of origin	KOREA
Test date	26-Mar-09		Date of issue	6-Apr-09
Testing location	ESTECH. Co., Ltd. 97-1 Hoiuk-Ri Majang-Myon, Icheon-city, KyungKi-Do, Korea			
Standard	FCC PART 15 2007 , ANSI C 63.4 2003 , ICES-003			
Test item	■ Conducted Emission	□ Class A ■ Class B	Test result	OK
	■ Radiated Emission	□ Class A ■ Class B	Test result	OK
Measurement facility registration number		94696		
Tested by	Senior Engineer H.H.Lee	(Signature)		
Reviewed by	Engineering Manager J.M.Yang	(Signature)		
Abbreviation	OK, Pass = Passed, Fail = Failed, N/A = not applicable			

* Note

- This test report is not permitted to copy partly without our permission
- This test result is dependent on only equipment to be used
- This test result based on a single evaluation of one sample of the above mentioned

Contents

1. Laboratory Information 3
2. Description of EUT 4
3. Test Standards 5
4. Measurement condition 6
5. Measurement of radiated emission 8
   5.1 Measurement equipment 8
   5.2 Environmental conditions 8
   5.3 Test data 9
6. Measurement of conducted emission 10
   6.1 Measurement equipment 10
   6.2 Environmental conditions 10
   6.3 Test data 11
7. Photographs of test setup 12
8. Photographs of EUT 14

Appendix 1. Spectral diagram

1. Laboratory Information

1.1 General

This EUT (Equipment Under Test) has been shown to be capable of compliance with the applicable technical standards and is tested in accordance with the measurement procedures as indicated in this report.ESTECH Lab attests to accuracy of test data. All measurement reported herein were performed by ESTECH Co., Ltd.
ESTECH Lab assume full responsibility for the completeness of these measurements and vouch for the qualifications of all persons taking them.

1.2 Test Lab.

Corporation Name : ESTECH Co. Ltd

Head Office : Rm 1015, World Venture Center II, 426-5, Gasan-dong, Geumcheon-gu, Seoul, Korea
(Safety & Telecom. Test Lab)

EMC Test Lab : 58-1 Osan-Ri, GaNam-Myon, YeoJoo-Gun, KyungKi-Do, Korea
97-1 Hoiuk-Ri Majang-Myon, Icheon-city, KyungKi-Do, Korea

1.3 Official Qualification(s)

KCC : Granted Accreditation from Ministry of Information & Communication for EMC, Safety and Telecommunication
KOLAS : Accredited Lab By Korea Laboratory Accreditation Schema base on CENELEC requirements
FCC : Filed Laboratory at Federal Communications Commission
VCCI : Granted Accreditation from Voluntary Control Council for Interference from ITE

2. Description of EUT

2.1 Summary of Equipment Under Test

Product Name : LCD TV/MONITOR
Model Number : 55LH85-UC
Serial Number : NONE
Manufacturer : LG Electronics Inc.
Country of origin : KOREA
Rating : INPUT:AC100-240V ~ 50 /60Hz
Receipt Date : 24-Mar-09
X-tal list(s) : 27MHz, 12MHz, 24MHz

2.2 General descriptions of EUT

MODELS		47LH85 (47LH85-UC)	55LH85 (55LH85-UC)	55LHX (55LH95-UC)
Dimensions (Width x Height x Depth)	With stand	46.4 x 33.5 x 15.7 inches 1179.0 x 851.4 x 398.8 mm	54.0 x 37.9 x 17.8 inches 1373.0 x 964.3 x 454.2 mm	
	Without stand	46.4 x 30.7 x 4.1 inches 1179.0 x 780.6 x 105.9 mm	54.0 x 34.9 x 4.2 inches 1373.0 x 888.5 x 106.9 mm	
Weight	With stand Without stand	55.9 lbs / 25.4 kg 47.6 lbs / 21.6 kg	86.4 lbs / 39.2 kg 74.5 lbs / 33.8 kg	
Power requirement		AC100-240V ~ 50/60Hz		
Television System		NTSC-M, ATSC, 64 & 256 QAM		
Program Coverage		VHF 2-13, UHF 14-69, CATV 1-135, DTV 2-69, CADTV 1-135		
External Antenna Impedance		75 ohm		
Environment condition	Operating Temperature Operating Humidity	32 ~ 104°F (0 ~ 40°C) Less than 80%		
	Storage Temperature Storage Humidity	-4 ~ 140°F (-20 ~ 60°C) Less than 85%		

Resolution	Horizontal Frequency(KHz)	Vertical Frequency(Hz)
640x350	31.468	70.09
720x400	31.469	70.08
640x480	31.469	59.94
800x600	37.879	60.31
1024x768	48.363	60.00
1280x768	47.776	59.87
1360x768	47.712	60.015
1280x1024	63.981	60.02
1600x1200	75.00	60.00
1920x1080 RGB-PC	66.587	59.934
1920x1080 HDMI-PC	67.5	60.00

3. Test Standards

Test Standard : FCC PART 15 (2007) & ICES-003

This Standard sets out the regulations under which an intentional, unintentional, or incidental radiator may be operated without an individual license. It also contains the technical specifications, administrative requirements and other conditions relating to the marketing of Part 15 devices.

Test Method : ANSI C 63.4 (2003)

This standard sets forth uniform methods of measurement of radio-frequency (RF) signals and noise emitted from both unintentional and intentional emitters of RF energy in the frequency range 9 kHz to 40 GHz. Methods for the measurement of radiated and AC power-line conducted radio noise are covered and may be applied to any such equipment unless otherwise specified by individual equipment requirements. These methods cover measurement of certain decides that deliberately radiate energy, such as intentional emitters, but does not cover licensed transmitters. This standard is not intended for certification/approval of avionic equipment or for industrial, scientific, and medical (ISM) equipment These method apply to the measurement of individual units or systems comprised of multiple units

4. Measurement Condition

4.1 EUT Operation.

* The EUT was in the following operation mode during all testing

* The operational conditions of the EUT was determined by the manufacturer according to the typical use of the EUT with respect to the expected hightest level of emission

* After setting as test arrangment diagram, we tested the EUT under continuous displaying "H" character

4.2 Configuration and Peripherals

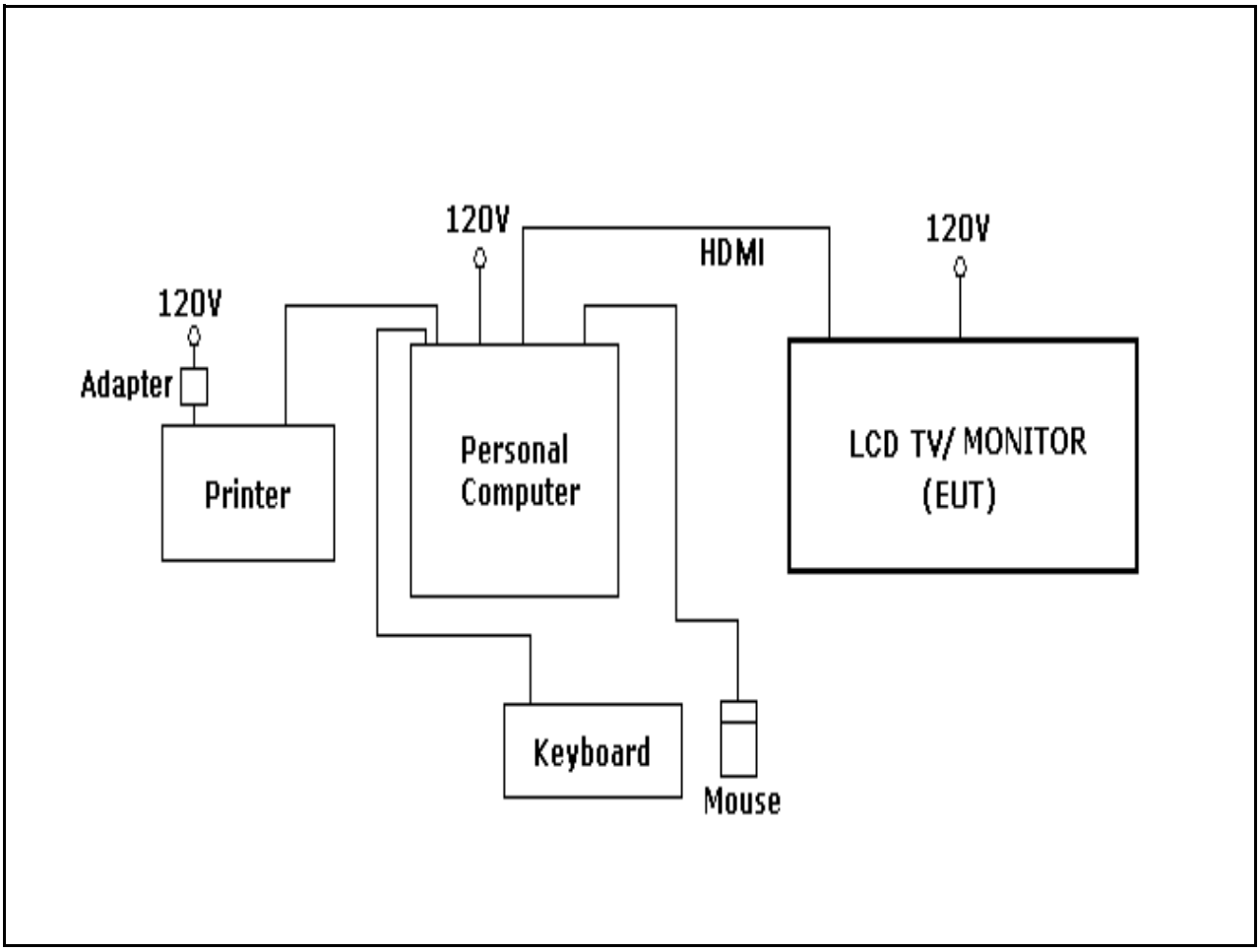

4.3 EUT and Support equipment

Equipment Name	Model	S/N	Manufacturer	Remark (FCC ID)
LCD TV/MONITOR	55LH85-UC	NONE	LG Electronics Inc.	EUT
Personal Computer	DCGAF	HKKPHBX	Dell Asia Pacific Sdn.	-
Mouse	MO56UOA	G0U00X18	Dell Asia Pacific Sdn.	-
Keyboard	1047	7691401962096	Microsoft	-
Printer	MJC-5750	NA34BFFP313402V	SAMSUNG ELECTRONICS(SHANDONG) DIGITAL PRINTING CO.,LTD.	-
Adapter	PA8040WB	0703016518	Bestec Electronics (DongGuan)Co.,Ltd.	-

4.4 Cable Connecting

Start Equipment		End Equipment		Cable Standard		Remark
Name	I/O port	Name	I/O port	Length	Shielded	
LCD TV/MONITOR	HDMI	Personal Computer	HDMI	2	Y	
Personal Computer	USB	Printer	USB	2	Y	
Personal Computer	USB	Mouse	USB	2	Y	
Personal Computer	USB	Keybard	USB	2	Y	
Printer	POWER	Adapter	-	2	N	

5. Measurement of radiated disturbance

Above 30 MHz Electric Field strength was measured in accordance with FCC Part 15 (2007) & ICES-003. The test setup was made according to ANSI C 63.4 (2003) on an open test site, which allows a 3m distance measurement. The EUT was placed in the center of wooden turntable. The height of this table was 0.8m. The measurement was conducted with both horizontal and vertical antenna polarization. The turntable has fully rotated. For further description of the configuration refer to the picture of the test setup.

5.1 Measurement equipments

Equipment Name	Type	Manufacturer	Serial No.	Next Calibration date
Test Receiver	ESVS10	Rohde & Schwarz	838562/002	2010. 1. 29
Spectrum Analyzer	R3273	ADVANTEST	110600592	2009. 6. 09
LogBicon Antenna	VULB 9160	Schwarzbeck	3142	2009. 5. 15
Amplifier	8447F	HP	2805A02972	2009. 6. 26
Turn Table	2087	EMCO	2129	-
Antenna Mast	2070-01	EMCO	9702-203	-
ANT Mast Controller	2090	EMCO	1535	-
Turn Table Controller	2090	EMCO	1535	-

5.2 Environmental Condition

Test Place : Open site(3m)

Temperature (°C) : 7 °C

Humidity (%) : 40 %

5.3 Test data

Test Date : 26-Mar-09 Measurement Distance : 3 m

Frequency (MHz)	Reading (dBμV)	Position (V/H)	Height (m)	Correction Factor		Result Value		
				Ant Factor (dB)	Cable (dB)	Limit (dBμV/m)	Result (dBμV/m)	Margin (dB)
36.42	12.20	H	3.4	11.24	0.9	40.0	24.37	-15.63
84.89	24.90	H	3.3	8.04	1.4	40.0	34.34	-5.66
120.02	16.10	V	1.0	11.18	1.8	43.5	29.04	-14.46
168.01	15.10	V	1.0	12.07	2.2	43.5	29.35	-14.15
197.15	20.30	H	1.8	9.87	2.3	43.5	32.49	-11.01
225.99	16.00	H	2.1	10.57	2.6	46.0	29.14	-16.86
265.42	16.10	V	1.0	11.88	2.9	46.0	30.90	-15.10
298.89	23.70	V	1.0	12.92	3.2	46.0	39.79	-6.21
360.69	20.10	V	1.0	14.24	3.7	46.0	38.04	-7.96
394.48	17.40	V	1.0	15.01	4.0	46.0	36.38	-9.62
430.37	11.70	V	1.0	15.98	4.3	46.0	32.00	-14.00
595.65	8.10	V	1.0	19.33	5.4	46.0	32.87	-13.13
665.81	5.30	V	1.0	20.22	6.1	46.0	31.62	-14.38
806.14	9.70	V	1.0	22.14	7.0	46.0	38.81	-7.19

Remark	H : Horizontal, V : Vertical TEST MODE ; Resolution1920*1080(60Hz) mode (Worse Case) *CL = Cable Loss-Amplifier Gain(In case of above1000Mhz) *CL = Cable Loss(In case of below1000Mhz) *The resolution bandwidth and video bandwidth of test receiver/spectrum analyzer is 120KHz for Quasi-peak detection at frequency below 1GHz.

6. Measurement of conducted disturbance

The continuous disturbance voltage of AC Mains in the frequency from 0.15 to 30 MHz was measured in accordance to FCC Part 15 (2007) & ICES-003. The test setup was made according to ANSI C 63.4 (2003) in a shielded. The EUT was placed on a non-conductive table at least 80 above the ground plan. A grounded vertical reference plane was positioned in a distance of 40cm from the EUT. The distance from the EUT to other metal surfaces was at least 0.8m. The EUT was only earthen by its power cord through the line impedance stabilizing network. The power cord has been bundled to a length of 1.0m.. The test receiver with Quasi Peak detector complies with CISPR 16.

6.1 Measurement equipments

Equipment Name	Type	Manufacturer	Serial No.	Next Calibration date
LISN	NNLA8120A	Schwarzbeck	8120161	2010. 2. 21
LISN	ESH3-Z5	Schwarzbeck	838979/010	2010. 2. 21
TEST Receive	ESPI7	Rohde & Schwarz	100185	2009. 8. 27
Pulse Limiter	ESH3Z2	Rohde & Schwarz	NONE	2009. 9. 10

6.2 Environmental Condition

Test Place : Shield Room

Temperature (°C) : 21 °C

Humidity (%) : 42 %

6.3 Test data

Test Date : 26-Mar-09

Frequency (MHz)	Correction Factor		Line (H/N)	Quasi-peak Value			Average Value		
	Lisn (dB)	Cable (dB)		Limit (dBμV)	Reading (dBμV)	Result (dBμV)	Limit (dBμV)	Reading (dBμV)	Result (dB)
0.17	0.09	0.2	H	64.91	40.70	41.02	54.91	34.62	34.94
0.19	0.09	0.2	H	63.86	47.64	47.96	53.86	41.52	41.84
0.20	0.09	0.2	H	63.78	49.05	49.37	53.78	42.08	42.40
0.25	0.09	0.2	H	61.63	42.79	43.11	51.63	37.84	38.16
0.26	0.09	0.2	N	61.40	48.92	49.24	51.40	43.25	43.57
0.33	0.09	0.2	N	59.55	40.86	41.20	49.55	35.47	35.81
0.52	0.10	0.4	N	56.00	36.29	36.75	46.00	29.32	29.78
0.59	0.10	0.4	H	56.00	35.49	35.97	46.00	29.24	29.72
0.60	0.10	0.4	N	56.00	36.70	37.18	46.00	29.95	30.43
0.72	0.11	0.4	N	56.00	37.22	37.72	46.00	29.17	29.67
0.78	0.11	0.4	N	56.00	34.49	35.00	46.00	28.59	29.10
0.85	0.11	0.4	H	56.00	34.22	34.76	46.00	25.47	26.01
16.17	0.71	1.0	H	60.00	34.67	36.38	50.00	30.51	32.22
16.23	0.71	1.0	N	60.00	39.46	41.18	50.00	33.92	35.64
19.70	0.78	1.1	N	60.00	36.23	38.13	50.00	32.79	34.69
19.71	0.78	1.1	H	60.00	35.30	37.20	50.00	29.62	31.52
20.21	0.79	1.1	N	60.00	33.71	35.64	50.00	26.63	28.56
23.10	0.85	1.2	N	60.00	30.88	32.96	50.00	21.26	23.34
Remark	H : Hot Line, N : Neutral Line								

7. Photographs of test setup

7.1 Setup for Radiated Test : 30 ~ 1000 MHz

[Front]

[Rear]

7.2 Setup for Conducted Test : 0.15 ~ 30 MHz

[Front]

[Rear]

8. Photographs of EUT

[Front]

[Rear]

Appendix 1. Spectral diagram

*HOT

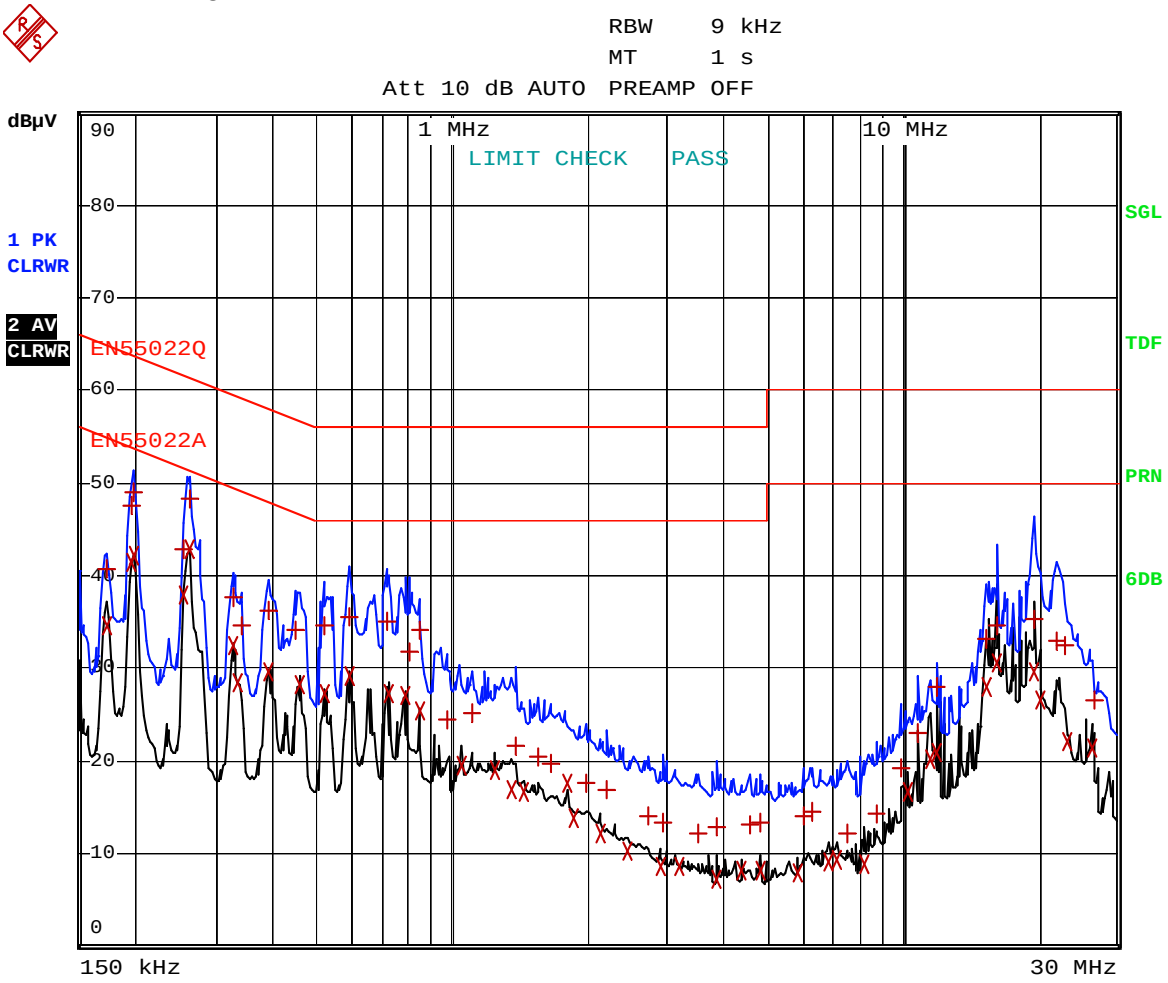

Comment: 55LH85-UC-HOT
Date: 26.MAR.2009 16:54:04

*NEUTRAL

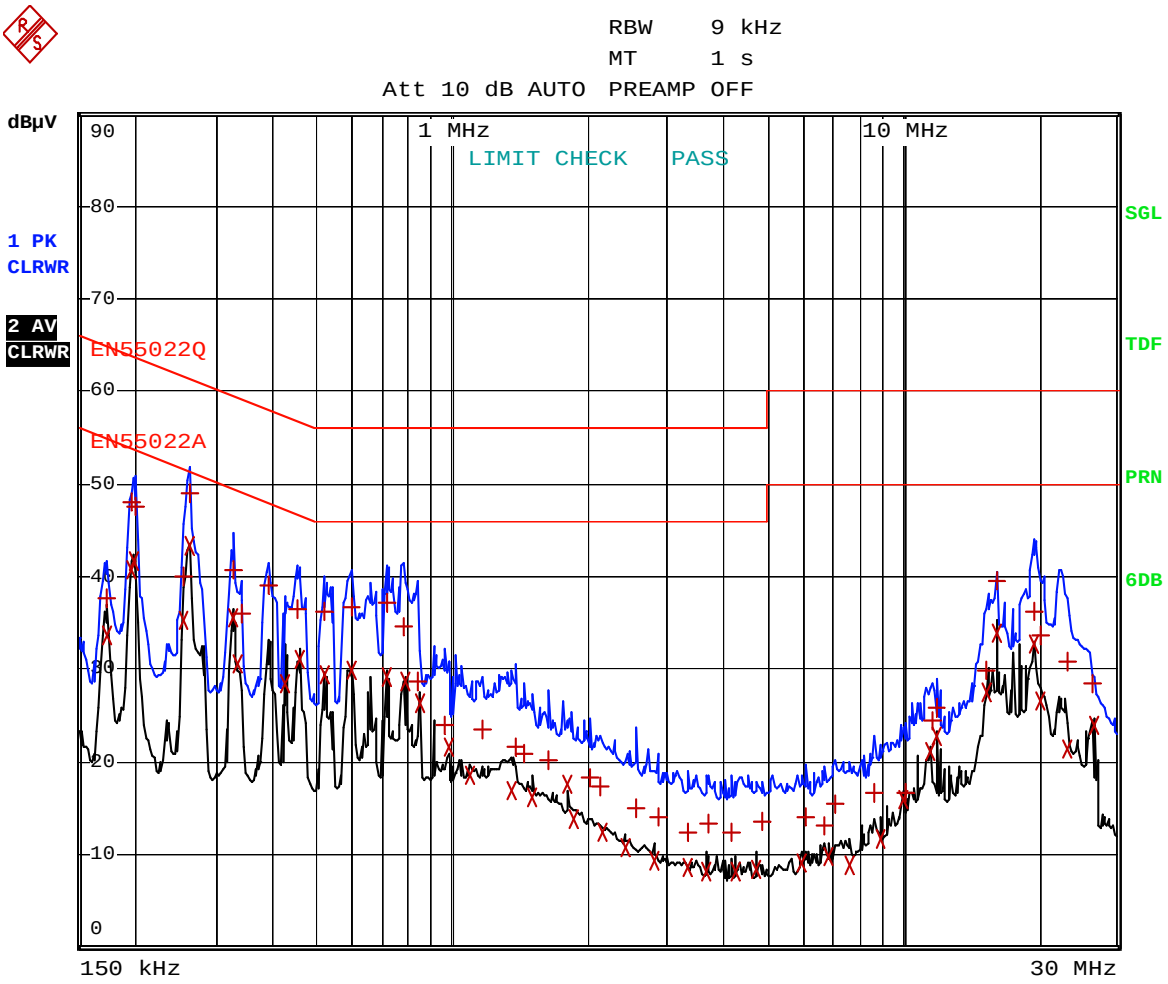

Comment: 55LH85-UC-NEUTRAL
Date: 26.MAR.2009 17:03:19