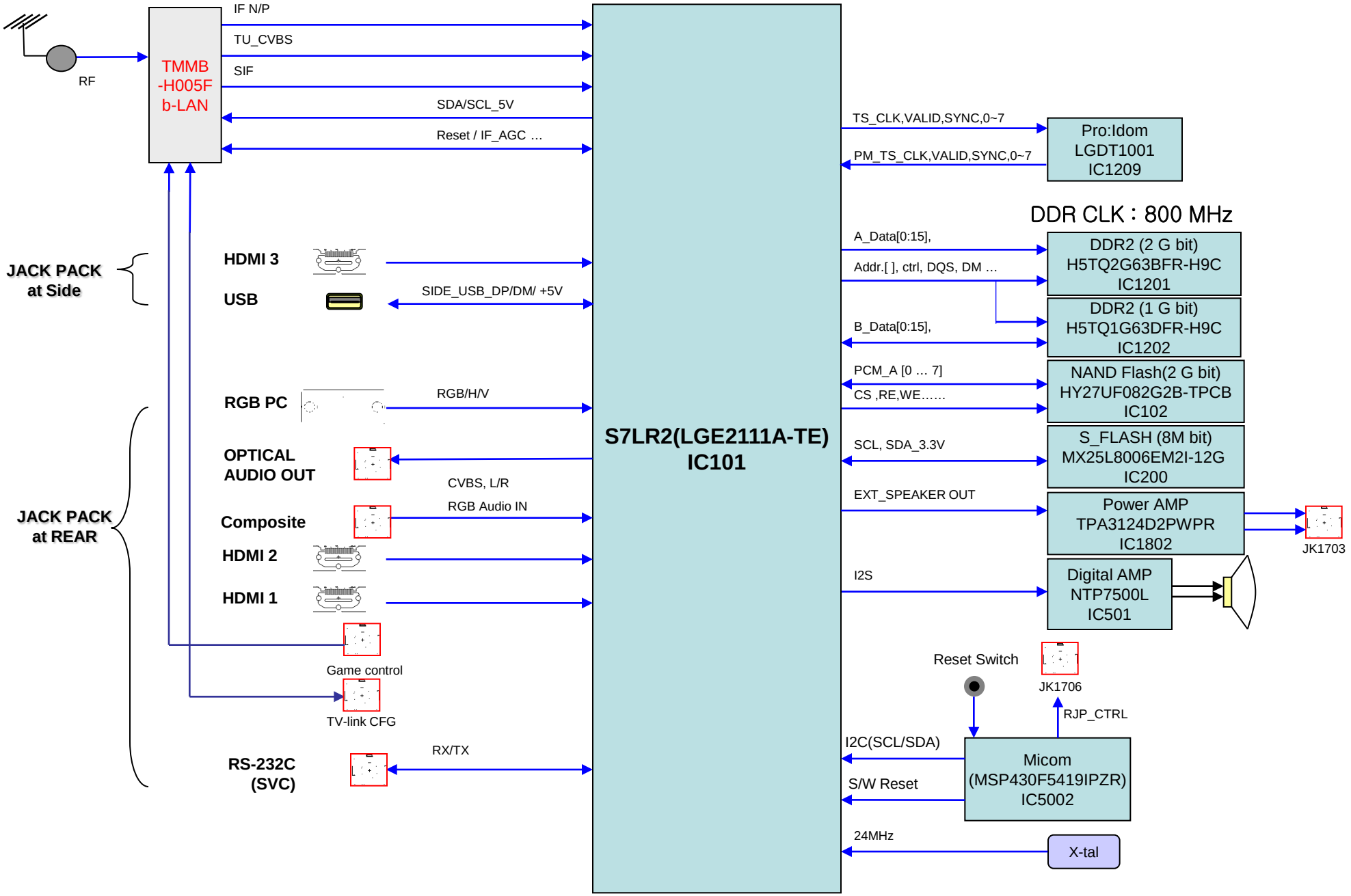# Overall Block Diagram