INSTRUCTION MANUAL

DVW-7000

DVD Player + Video Cassette Recorder — English

Reproductor de DVD + Videograbador — Español

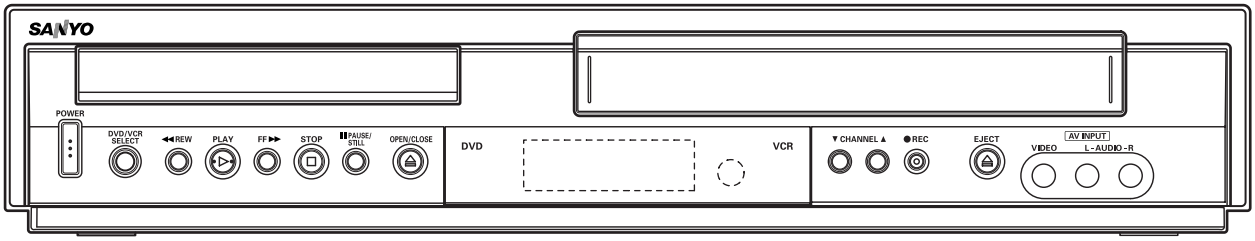

Only cassettes marked VHS can be used with this DVD+VCR.

As an ENERGY STAR® Partner, SANYO has determined that this product or product model meets the ENERGY STAR® guidelines for energy efficiency.

Please read this manual carefully before connecting your DVD+VCR and operating it for the first time.
Keep the manual in a safe place for future reference.

Safety Precautions

CAUTION

RISK OF ELECTRIC SHOCK DO NOT OPEN

CAUTION: TO REDUCE THE RISK OF ELECTRIC SHOCK
DO NOT REMOVE COVER (OR BACK)
NO USER-SERVICEABLE PARTS INSIDE
REFER SERVICING TO QUALIFIED SERVICE PERSONNEL.

This lightning flash with arrowhead symbol within an equilateral triangle is intended to alert the user to the presence of uninsulated dangerous voltage within the product's enclosure that may be of sufficient magnitude to constitute a risk of electric shock to persons.

The exclamation point within an equilateral triangle is intended to alert the user to the presence of important operating and maintenance (servicing) instructions in the literature accompanying the product.

WARNING: TO REDUCE THE RISK OF FIRE OR ELECTRIC SHOCK, DO NOT EXPOSE THIS APPARATUS TO RAIN OR MOISTURE.

CAUTION: TO PREVENT ELECTRIC SHOCK, MATCH WIDE BLADE OF PLUG TO WIDE SLOT, FULLY INSERT.

ATTENTION: POUR ÉVITER LES CHOC ÉLECTRIQUES, INTRODUIRE LA LAME LA PLUS LARGE DE LA FICHE DANS LA BORNE CORRESPONDANTE DE LA PRISE ET POUSSER JUSQU'AU FOND.

WARNING: Do not install this equipment in a confined space such as a book case or similar unit.

NOTE TO CABLE/TV INSTALLER: This reminder is provided to call the cable TV system installer's attention to Article 820-40 of the National Electric Code (U.S.A.). The code provides guidelines for proper grounding and, in particular, specifies that the cable ground shall be connected to the grounding system of the building, as close to the point of the cable entry as practical.

CAUTION:

This DVD+VCR employs a Laser System.

To ensure proper use of this product, please read this owner's manual carefully and retain for future reference should the unit require maintenance, contact an authorized service location.

Use of controls, adjustments, or the performance of procedures other than those specified herein may result in hazardous radiation exposure.

To prevent direct exposure to laser beam, do not try to open the enclosure. Visible laser radiation when open. DO NOT STARE INTO BEAM.

CAUTION: The apparatus should not be exposed to water (dripping or splashing) and no objects filled with liquids, such as vases, should be placed on the apparatus.

FCC WARNING: This equipment may generate or use radio frequency energy. Changes or modifications to this equipment may cause harmful interference unless the modifications are expressly approved in the instruction manual. The user could lose the authority to operate this equipment if an unauthorized change or modification is made.

REGULATORY INFORMATION: FCC Part 15

This product has been tested and found to comply with the limits for a Class B digital device, pursuant to Part 15 of the FCC Rules. These limits are designed to provide reasonable protection against harmful interference when the product is operated in a residential installation. This product generates, uses, and can radiate radio frequency energy and, if not installed and used in accordance with the instruction manual, may cause harmful interference to radio communications. However, there is no guarantee that interference will not occur in a particular installation. If this product does cause harmful interference to radio or television reception, which can be determined by turning the product off and on, the user is encouraged to try to correct the interference by one or more of the following measures:

- Reorient or relocate the receiving antenna.
- Increase the separation between the product and receiver.
- Connect the product into an outlet on a circuit different from that to which the receiver is connected.
- Consult the dealer or an experienced radio/TV technician for help.

NOTES ON COPYRIGHTS:

It is forbidden by law to copy, broadcast, show, broadcast via cable, play in public, or rent copyrighted material without permission.

This product features the copy protection function developed by Macrovision. Copy protection signals are recorded on some discs. When recording and playing the pictures of these discs on a VCR, picture noise will appear.

This product incorporates copyright protection technology that is protected by method claims of certain U.S. patents and other intellectual property rights owned by Macrovision Corporation and other rights owners. Use of this copyright protection technology must be authorized by Macrovision Corporation, and is intended for home and other limited viewing uses only unless otherwise authorized by Macrovision Corporation. Reverse engineering or disassembly is prohibited.

SERIAL NUMBER: The serial number is found on the back of this unit. This number is unique to this unit and not available to others. You should record requested information here and retain this guide as a permanent record of your purchase.

Model No. _____DVW-7000_____

Serial No. _____

IMPORTANT SAFETY INSTRUCTIONS

CAUTION: PLEASE READ AND OBSERVE ALL WARNINGS AND INSTRUCTIONS IN THIS OWNER'S MANUAL. AND THOSE MARKED ON THE PRODUCT. RETAIN THIS BOOKLET FOR FUTURE REFERENCE.

This product has been designed and manufactured to assure personal safety. Improper use can result in electric shock or fire hazard. The safeguards incorporated in this product will protect you if you observe the following procedures for installation, use, and servicing.

This product does not contain any parts that can be repaired by the user.

DO NOT REMOVE THE CABINET COVER, OR YOU MAY BE EXPOSED TO DANGEROUS VOLTAGE. REFER SERVICING TO QUALIFIED SERVICE PERSONNEL ONLY.

1. **Read these instructions. -** All these safety and operating instructions should be read before the product is operated.

2. **Keep these instructions. -** The safety, operating and use instructions should be retained for future reference.

3. **Heed all warnings. -** All warnings on the product and in the operating instructions should be adhered to.

4. **Follow all instructions. -** All operating and use instructions should be followed.

5. **Do not use this product near water. –** For example: near a bath tub, wash bowl, kitchen sink, laundry tub, in a wet basement; or near a swimming pool; and other areas located near water.

6. **Clean only with dry cloth. –** Unplug this product from the wall outlet before cleaning. Do not use liquid cleaners.

7. **Do not block any ventilation openings. Install in accordance with the manufacturer's instructions. -** Slots and openings in the cabinet are provided for ventilation and to ensure reliable operation of the product and to protect it from over- heating. The openings should never be blocked by placing the product on a bed, sofa, rug or other similar surface. This product should not be placed in a built-in installation such as a bookcase or rack unless proper ventilation is provided or the manufacturer's instructions have been adhered to.

8. **Do not install near any heat sources such as radiators, heat registers, stoves, or other apparatus (including amplifiers) that produce heat.**

9. **Do not defeat the safety purpose of the polarized or grounding-type plug. A polarized plug has two blades with one wider than the other. A grounding type plug has two blades and a third grounding prong. The wide blade or the third prong are provided for your safety. If the provided plug does not fit into your outlet, consult an electrician for replacement of the obsolete outlet.**

10. **Protect the power cord from being walked on or pinched particularly at plugs, convenience receptacles, and the point where they exit from the product.**

11. **Only use attachments/accessories specified by the manufacturer.**

12. **Use only with the cart, stand, tripod, bracket, or table specified by the manufacturer, or sold with apparatus. When a cart is used, use caution when moving the cart/product combination to avoid injury from tip-over.**

13. **Unplug this product during lightning storms or when unused for long periods of time.**

14. **Refer all servicing to qualified service personnel. Servicing is required when the product has been damaged in any way, such as power-supply cord or plug is damaged, liquid has been spilled or objects have fallen into the product, the product has been exposed to rain or moisture, does not operate normally, or has been dropped.**

Table of Contents

Introduction

Safety Precautions 2
IMPORTANT SAFETY INSTRUCTIONS 3
Table of Contents 4
Before Use 5-6
Playable Discs 5
Precautions 6
Notes on Discs 6
About Symbols 6
Front Panel 7
Display Window. 8
Remote Control 9
Rear Panel 10

Preparation

Connections 11-13
Connecting Antenna/Cable TV to DVD+VCR . . . 11
Basic TV Connections 12
Optional, Preferred TV Connections 12-13
Before Operation - VCR Part 14-16
On-Screen Display(OSD) 14
Setting the On-Screen Display 14
Setting the VCR Setup Menu 15
Channel Selection 15
Setting the Clock 16
Before Operation - DVD Part 17-20
General Explanation. 17
On-Screen Display. 17
Initial Settings 18-20
• *Initial Settings General Operation. 18*
• *LANGUAGE. 18*
• *DISPLAY 18*
• *AUDIO. 19*
• *OTHERS 19*
• *LOCK 20*
TVG® (TVGuardian®). 21
Setting the TVG® (TVGuardian®). 21

Operation

Operation with tape 22-27
Normal Playback 22
Special Effect Playbacks 22
• *Search. 22*
• *Still Picture and Frame-by-Frame Playback . 22*
• *Slow Motion. 22*
• *Ad JUMP (Advertisement Jump). 22*
Normal Recording 23
Timer Recording 23-24
Instant Timer Recording 25
Dubbing and Editing. 25
Copying from DVD to VCR. 25
VHS Hi-Fi Stereo System/MTS Broadcast 26
Tape Counter Memory Feature. 27
Additional Information 27
Operation with DVD 28-30
Playing DVD 28
General Features. 28
• *Moving to another TITLE 28*
• *Moving to another CHAPTER. 28*
• *Slow Motion. 28*
• *Still Picture and Frame-by-Frame Playback . 29*
• *Search. 29*
• *Repeat. 29*
• *Repeat A-B 29*
• *Time Search 29*
• *3D Surround 29*
• *Zoom. 30*
• *Marker Search 30*
Special DVD Features 30
• *Checking the contents of DVD Video discs: Menus . 30*
• *Title Menu 30*
• *Disc Menu 30*
• *Camera Angle 30*
• *Changing the Audio Language 30*
• *Subtitle 30*
Operation with Audio CD and MP3 Discs 31-32
Playing an Audio CD and MP3 Discs 31
Notes on MP3 Recordings 31
• *Pause 32*
• *Moving to another Track 32*
• *Repeat Track/ All/ Off. 32*
• *Search. 32*
• *Random 32*
• *Repeat A-B 32*
Programmed Playback 33
Programmed Playback with Audio CD
and MP3 Discs 33
• *Repeat Programmed Tracks 33*
• *Erasing a Track from Program List. 33*
• *Erasing the Complete Program List 33*

Reference

Troubleshooting 34-35
Language Code List 36
Country Code List 37
Specifications 38
Warranty 39

About the symbols for instructions

⚠ Indicates hazards likely to cause harm to the unit itself or other material damage.

N Indicates special operating features of this unit.

T Indicates tips and hints for making the task easier.

Playable Discs

DVD VIDEO	DVD (8 cm/12 cm disc)
COMPACT disc DIGITAL AUDIO	Audio CD (8 cm/12 cm disc)

In addition, this unit can play a CD-R or CD-RW that contains audio titles or MP3 files.

Notes

– Depending on the conditions of the recording equipment or the CD-R/RW disc itself, some CD-R/RW discs cannot be played on the unit.
– The unit cannot play discs that contain data other than MP3 and CD-DA data.
– Do not attach any seal or label to either side (the labeled side or the recorded side) of a disc.
– Do not use irregularly shaped CDs (e.g., heart-shaped or octagonal). It may result in malfunctions.

Notes on DVDs

Some playback operations of DVDs may be intention ally fixed by software manufacturers. As this unit plays DVDs according to disc content designed by the software manufacturer, some playback features of the unit may not be available or other functions may be added. Refer also to the instructions supplied with the DVDs. Some DVDs made for business purposes may not be played on the unit.

Regional code of the DVD+VCR and DVDs

This DVD+VCR is designed and manufactured for playback of region 1 encoded DVD software. The region code on the labels of some DVD discs indicates which type of DVD+VCR can play those discs. This unit can play only DVD discs labeled 1 or ALL. If you try to play any other discs, the message “Check Regional Code” will appear on the TV screen. Some DVD discs may not have a region code label even though their playback is prohibited by area limits.

Note on DTS-encoded CDs

When playing DTS-encoded CDs, excessive noise may be exhibited from the analog stereo output. To avoid possible damage to the audio system, turn down the volume before playing back such discs, adjust the volume gradually, and keep the volume level low. To enjoy DTS Digital Surround™ playback, an external 5.1 channel Digital Surround™ decoder system must be connected to the digital output of the unit.

Disc-related terms

Title (DVD only)

The main film content or accompanying feature content or music album.
Each title is assigned a title reference number enabling you to locate it easily.

Chapter (DVD only)

Sections of a picture or a musical piece that are smaller than titles. A title is composed of one or several chapters. Each chapter is assigned a chapter number to enable you to locate the chapter you want. Depending on the disc, chapters may not be recorded.

Track (audio CD only)

Sections of a musical piece on an audio CD. Each track is assigned a track number, enabling you to locate the track you want.

Remote control battery installation

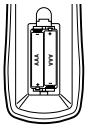

Detach the battery cover on the rear of the remote control, and insert two R03 (size AAA) batteries with ⊕ and ⊖ aligned correctly.

Caution

Do not mix old and new batteries. Never mix different types of batteries (standard, alkaline, etc.).

Remote Control Operation Range

Point the remote control at the remote sensor and press the buttons.

- **Distance:** About 23 ft (7 m) from the front of the remote sensor
- **Angle:** About 30° in each direction of the front of the remote sensor

IMPORTANT NOTE:
SPENT OR DISCHARGED BATTERIES MUST BE RECYCLED OR DISPOSED OF IN A SAFE MANNER IN COMPLIANCE WITH ALL APPLICABLE LAWS. FOR DETAILED INFORMATION, CONTACT YOUR LOCAL COUNTY SOLID WASTE AUTHORITY.

Manufactured under license from Dolby Laboratories. Dolby and the double-D symbol are trademarks of Dolby Laboratories. Confidential unpublished works. Copyright 1992-1997 Dolby Laboratories. All rights reserved.

DTS and DTS Digital Out are trademarks of Digital Theater Systems, Inc.

Precautions

Handling the unit

When shipping the unit
The original shipping carton and packing materials come in handy. For maximum protection, re-pack the unit as it was originally packaged at the factory.

When setting up the unit
The picture and sound of a nearby TV, VCR, or radio may be distorted during playback. In this case, position the unit away from the TV, VCR, or radio, or turn off the unit after removing the disc.

To keep the surface clean
Do not use volatile liquids, such as insecticide spray, near the unit. Do not leave rubber or plastic products in contact with the unit for a long period of time. They will leave marks on the surface.

Cleaning the unit

To clean the cabinet
Use a soft, dry cloth. If the surfaces are extremely dirty, use a soft cloth lightly moistened with a mild detergent solution. Do not use strong solvents such as alcohol, benzine, or thinner, as these might damage the surface of the unit.

To obtain a clear picture
The DVD+VCR is a high-tech, precision device. If the optical pick-up lens and disc drive parts are dirty or worn, the picture quality will be poor.
Regular inspection and maintenance are recommended after every 1,000 hours of use. (This depends on the operating environment.)
For details, please contact your nearest dealer.

Notes on Discs

Handling discs

Do not touch the playback side of the disc.
Hold the disc by the edges so that fingerprints will not get on the surface.
Do not stick paper or tape on the disc.

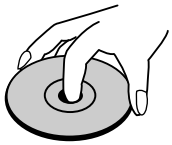

Storing discs

After playing, store the disc in its case.
Do not expose the disc to direct sunlight or sources of heat, or leave it in a parked car exposed to direct sunlight, as there may be a considerable temperature increase inside the car.

Cleaning discs

Fingerprints and dust on the disc can cause poor picture quality and sound distortion. Before playing, clean the disc with a clean cloth. Wipe the disc from the center out.

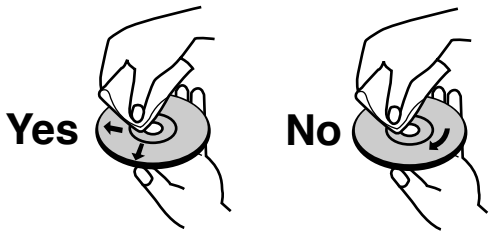

Do not use strong solvents such as alcohol, benzine, thinner, commercially available cleaners, or anti-static spray intended for older vinyl records.

About Symbols

About the ⊘ symbol display

" ⊘ " may appear on the TV screen during operation. This icon means the function explained in this owner's manual is not available on that specific DVD video disc.

About the disc symbols for instructions

A section whose title has one of the following symbols are applicable only to those discs represented by the symbol.

DVD DVDs
CD Audio CDs.
MP3 MP3 Discs.

Setting the Output Source

You must select one of your output sources (DVD or VCR) to view on the TV screen.

- **If you want to view output source of DVD deck:**
Press DVD on the remote or DVD/VCR on the front panel until DVD indicator in the display window lights and output source of DVD deck is viewed on the TV screen.

- **If you want to view output source of VCR deck:**
Press VCR on the remote or DVD/VCR on the front panel until VCR indicator in the display window lights and output source of VCR deck is viewed on the TV screen.

Note

- If you insert a disc while the DVD+VCR is in the VCR mode, the DVD+VCR will switch to DVD mode automatically.
- If you insert a cassette tape without an erasure prevention tab intact while the DVD+VCR is in the DVD mode, the DVD+VCR will switch to VCR mode automatically.

Front Panel

POWER
Switches the DVD+VCR ON and OFF.

DVD/VCR SELECT (output select)
Select one of your output sources to view on the TV screen between DVD and VCR.

Disc Tray (DVD deck)
Insert a disc here.

PLAY (▶)
Starts playback of a disc or tape.

Display window
Shows the current status of the DVD+VCR.

AV INPUT (VIDEO IN/AUDIO IN (Left/Right))
Connect the audio/video output of an external source (Audio system, TV/Monitor, Another VCR).

Cassette Compartment (VCR deck)
Insert a video cassette here.

Remote Sensor
Point the DVD+VCR remote control here.

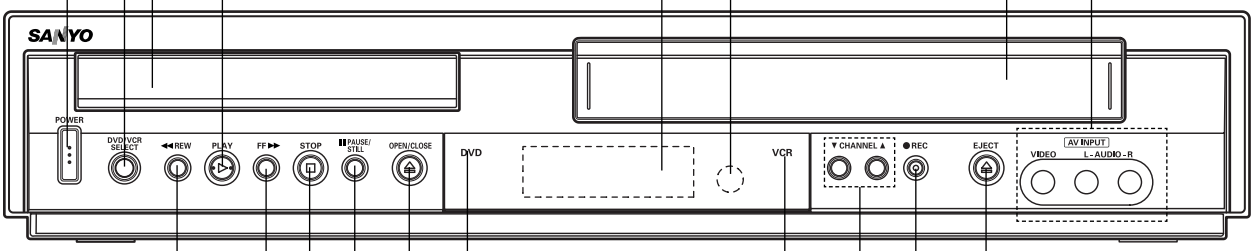

VCR indicator
Indicates the active VCR deck.

EJECT(⏏)
Ejects the tape in the VCR deck.

DVD indicator
Indicates the active DVD deck.

OPEN/CLOSE (⏏)
Opens or closes the disc tray.

REC (●)
To record normally or to activate Instant Timer Recording.

PAUSE/STILL(❚❚)
Pause playback of a disc in the DVD deck temporarily/press repeatedly for frame-by-frame playback.

CHANNEL (▲/▼)
To scan up or down through memorized channels.

STOP (■)
Stops playback of disc or tape.

FF(▶▶)
DVD: Go to NEXT chapter/track. Press and hold for a fast forward search.
VCR: Advances the tape from STOP mode or for fast forward picture search.

REW (◀◀)
DVD: Go to beginning of current chapter/track or to previous chapter/track. Press and hold for a fast reverse search.
VCR: Rewinds the tape from STOP mode or for fast reverse picture search.

Child Lock

The control buttons on the front panel of the DVD+VCR can be switched off so that your DVD+VCR can only be operated using the remote control.

Press SAFE on the remote control to enable LOCK function, SAFE appears in the display window.
To disable the LOCK function, press SAFE on the remote control until OFF appears in the display window.

Display Window

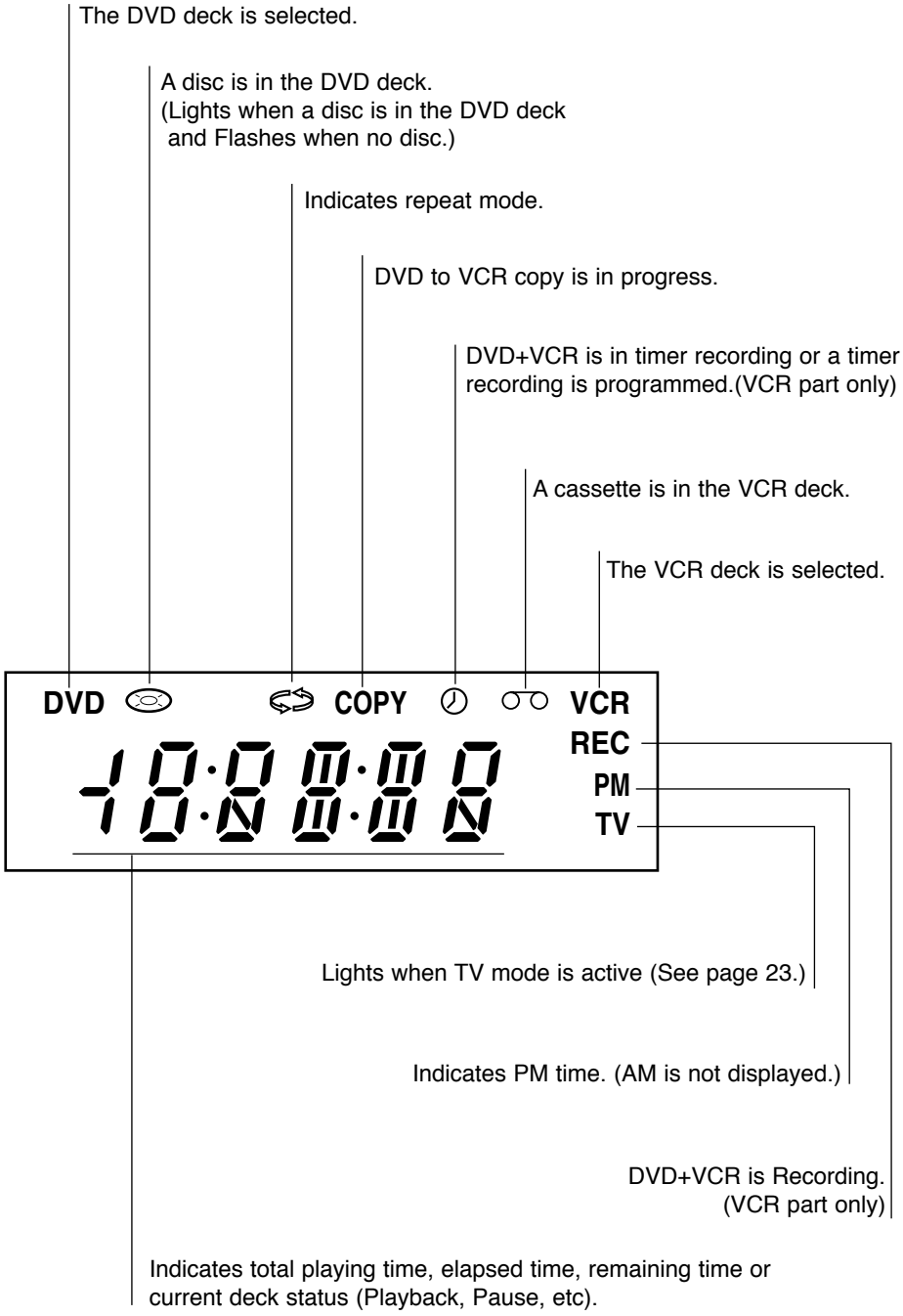

Remote Control

DVD/VCR select button
Select the output source (DVD or VCR) to view on the TV screen.

POWER
Switches DVD+VCR ON and OFF.

TV/VCR
To view channels selected by the VCR tuner or by the TV tuner.

DISPLAY, CLK/CNT
Accesses On-Screen display. Switches among the clock, tape counter and tape remaining modes on the display.

◄/►/▲/▼ (left/right/up/down)
- Selects an option in the menu
- **CH/TRK** (▲/▼): Selects channel of VCR. Adjusts manually the tape's picture onscreen.

SETUP, MENU
Accesses or removes DVD setup menu and VCR menu.

TITLE ●
Displays the disc's Title menu, if available.

PAUSE/STEP (❚❚) ●
Pause playback or recording temporarily/press repeatedly for frame-by-frame playback.

STOP (■) ●
Stops playback.

REC (●) ●
Records normally or activates Instant Timer Recording.

0-9 numerical buttons
Selects numbered options in a menu.

AUDIO ●
Selects an audio language (DVD) or an audio channel (CD).

SUBTITLE ●
Selects a subtitle language.

MARKER ●
Marks any point during playback.

SEARCH ●
Displays MARKER SEARCH menu.

REPEAT ●
Repeat chapter, track, title, all.

RANDOM, Ad JUMP ●
- Plays tracks in random order.
- Fast forwards picture search through 30 seconds of recording.

A-B, SP/SLP ●
- Repeats sequence.
- Selects recording speed

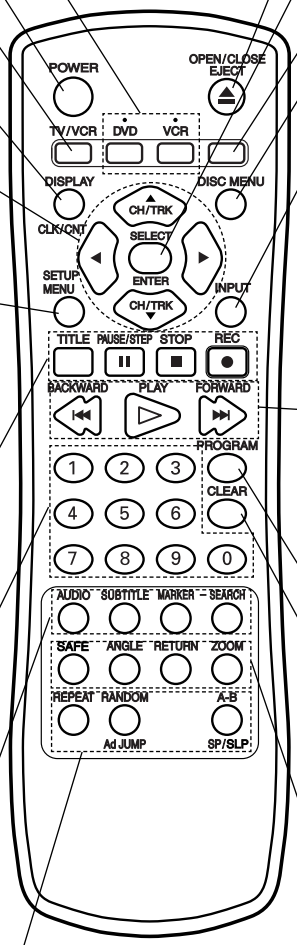

OPEN/CLOSE, EJECT (⏏)
- Opens and closes the disc tray.
- Ejects the tape in the VCR deck.

SELECT/ENTER
- Acknowledges menu selection.
- Displays functions on the TV screen.

This button is not available.

DISC MENU
Accesses menu on a DVD disc.

INPUT
To select the VCR deck's source (Tuner, LINE 1, or LINE 2).

● FORWARD (►►I)
DVD; Search forward*/go to next chapter or track.
VCR; Advances the tape during the STOP mode or for fast forward picture search.

● PLAY (▷)
Starts playback.

● BACKWARD (I◄◄)
DVD; Search backward*/go to beginning of current chapter or track or go to previous chapter or track.
VCR; Rewinds the tape during the STOP mode or for fast reverse picture search.

* Press and hold button for about two seconds.

PROGRAM
Accesses or removes Program menu.

CLEAR
Removes a track number on the program menu or a mark on the MARKER SEARCH menu.

● SAFE
Switch the Lock function on and off.

● ANGLE
Selects a DVD camera angle if available.

● RETURN
Removes the setup menu.

● ZOOM
Enlarges DVD video image.

Note
This remote control use the same buttons for VCR and DVD functions (ex. PLAY).
When using a VCR, first press the VCR button.
When using a DVD, first press the DVD button.

Rear Panel

DVD/VCR OUT (VIDEO/AUDIO (Left/Right))
Connect to a TV with video and audio inputs.

COMPONENT VIDEO OUT (Y Pb Pr) (DVD OUT)
Connect to a TV with Y Pb Pr inputs.

VCR IN LINE 1
(VIDEO IN/AUDIO IN (Left/Right))
Connect the audio/video output of an external source (Audio system, TV/Monitor, Another VCR).

AUDIO OUT (Left/Right) (DVD OUT)
Connect to a TV, amplifier, receiver, or stereo system.

S-VIDEO OUT (DVD OUT)
Connect to a S-Video Input on TV.

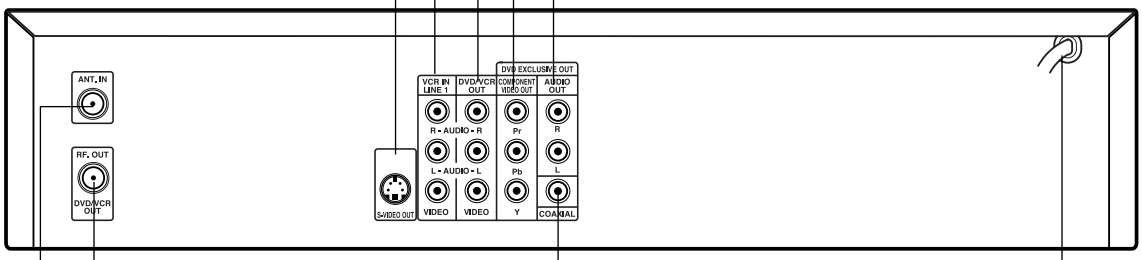

AC Power Cord
Plug into the power source.

DIGITAL AUDIO OUT (COAXIAL) (DVD OUT)
Connect to digital (coaxial) audio equipment.

RF. OUT(DVD/VCR OUT)
Connect to a TV with RF coaxial inputs.

ANT.IN (ANTENNA INPUT)
Connect the VHF/UHF/CATV antenna to this terminal.

⚠

Do not touch the inner pins of the jacks on the rear panel. Electrostatic discharge may cause permanent damage to the unit.

Tips

- Depending on your TV and other equipment you wish to connect, there are various ways you could connect the DVD+VCR. Use connections described on pages 11-13.
- Please refer to the manuals of your TV, VCR, Stereo System or other devices as necessary to make the best connections.
- For better sound reproduction, connect the DVD+VCR's DVD/VCR AUDIO OUT jacks to the audio in jacks of your amplifier, receiver, stereo or audio/video equipment. See *Optional, Preferred TV Connections* on pages 12-13.

Caution

- Make sure the DVD+VCR is connected directly to the TV. Tune the TV to the correct video input channel.
- Do not connect the DVD+VCR's DVD/VCR AUDIO OUT jacks to the phono in jack (record deck) of your audio system.
- Do not connect your DVD+VCR via your VCR. The DVD image could be distorted by the copy protection system.

Connecting Antenna/Cable TV to DVD+VCR

1 Disconnect the antenna leads from the rear of the TV.

2 Identify the type of cable from your antenna. If it is a round cable as illustrated, it is a 75 ohm coaxial antenna cable. This cable will connect directly to the jack marked ANT.IN on your DVD+VCR.

Tip

If your antenna lead wire is a flat type antenna cable, connect it to a Antenna Adaptor (300-ohm to 75-ohm) (not supplied) and slip the Adaptor onto the ANT.IN jack. The Adaptor does not screw on to the DVD+VCR, it just slips over the jack.

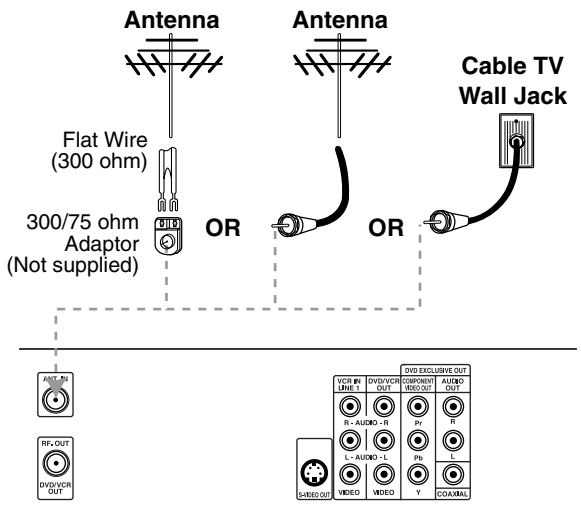

Rear of DVD+VCR

Without Cable Box

If your cable wire is connected to your TV without a converter or descrambler box, unscrew the wire from your TV and attach it to the ANT.IN jack on the DVD+VCR. Use the supplied round coaxial cable to connect between the DVD+VCR's RF.OUT jack and the 75 ohm antenna input jack on the TV. With this connection, you can receive all midband, super band, and hyperband channels.

With Cable Box

If a converter is required in your cable system, follow the instruction below:
The cable hookup permits both TV and DVD+VCR operation.

To view or record CATV channel

1 Tune the TV to the DVD+VCR output channel (CH 3 or 4).
2 Set the DVD+VCR channel selector to the output channel of the Cable Converter box by pressing the CH/TRK (▲/▼) or number (0-9) of your DVD+VCR. (Example: CH3)
3 Select the channel to view at the Cable Converter Box.

Notes

- With this connection, you CANNOT record one program while viewing another.
- If you are using a cable box to tune channels, it is not necessary to do Auto Channel Programming as indicated on page 15.

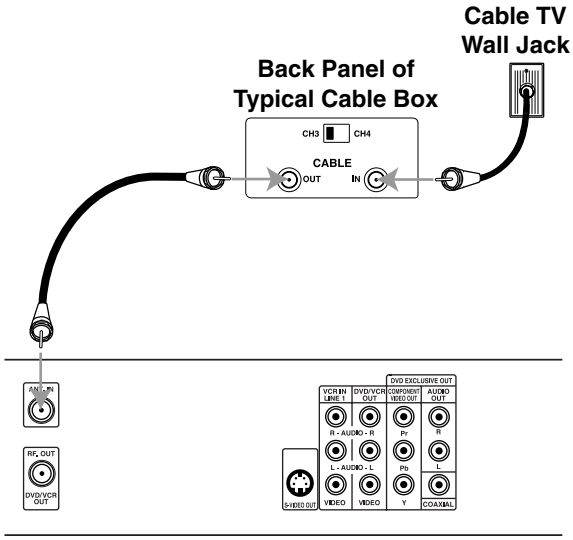

Rear of DVD+VCR

Basic TV Connections

- Make one of the following connections, depending on the capabilities of your existing equipment.

RF coaxial connection

Connect the RF.OUT jack on the DVD+VCR to the antenna in jack on the TV using the 75-ohm Coaxial Cable supplied **(R)**.

Note

If you use this connection, tune the TV to the DVD+VCR's RF output channel (CH 3 or 4).

How to set the DVD+VCR's RF output channel

1. When the DVD+VCR is turned off, press and hold CHANNEL (▲/▼) on the front panel for about five seconds.
   It will turn itself on and "RF03" or "RF04" appears in the display window.
2. Press CHANNEL (▲/▼) on the front panel or CH/TRK (▲/▼) on the remote control to change the RF output channel (CH 03 or CH 04).
3. Turn off the DVD+VCR.

Audio/Video connection

1 Connect the DVD/VCR VIDEO OUT jack on the DVD+VCR to the video in jack on the TV using the video cable supplied **(V)**.

2 Connect the Left and Right DVD/VCR AUDIO OUT jacks on the DVD+VCR to the audio left/right in jacks on the TV **(A1)** using the supplied audio cables.

Note

If you use this connection, set the TV's source selector to VIDEO.

Rear of TV

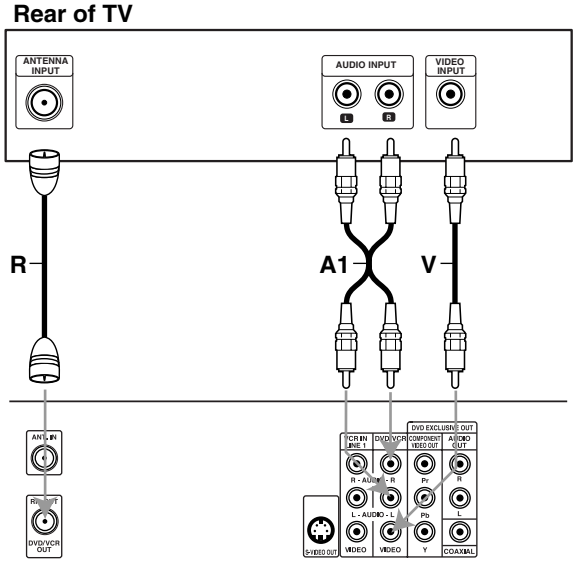

Rear of DVD+VCR

Optional, Preferred TV Connections

Note

You can ONLY watch and listen to DVD playback through the connections shown below.

S-Video connection

1 Connect the S-VIDEO OUT jack on the DVD+VCR to the S-Video in jack on the TV using the optional S-Video cable **(S)**.

2 Connect the Left and Right AUDIO OUT jacks of the DVD+VCR to the audio left/right in jacks on the TV using the supplied audio cables **(A2)**.

Component Video (Color Stream®) connection

1 Connect the COMPONENT VIDEO OUT jacks on the DVD+VCR to the corresponding in jacks on the TV using an optional Y Pb Pr cable **(C)**.

2 Connect the Left and Right AUDIO OUT jacks of the DVD+VCR to the audio left/right in jacks on the TV **(A2)** using the supplied audio cables.

Rear of TV

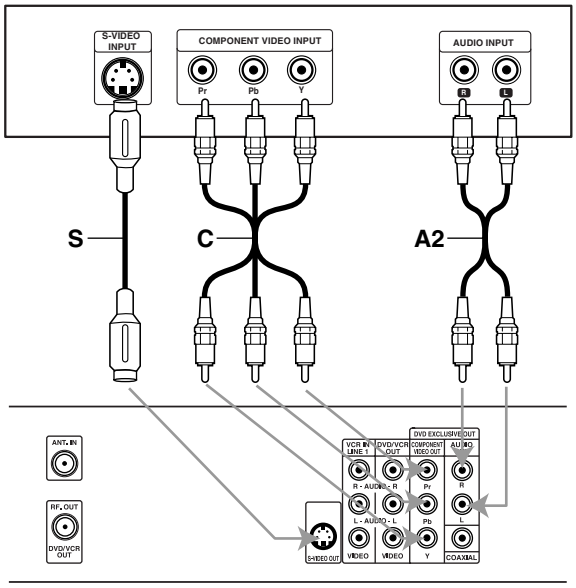

Rear of DVD+VCR

Optional, Preferred TV Connections(Continued)

Note

You can ONLY listen to DVD playback using COAXIAL **(X)** and AUDIO OUT **(A2)** connections. The tuner and VCR will still be heard through the RF.OUT **(R)** or DVD/VCR AUDIO OUT **(A1)** jacks. (See page 12.)

Connecting to an amplifier equipped with two channel analog stereo or Dolby Surround

Connect the Left and Right AUDIO OUT (or DVD/VCR AUDIO OUT) jacks on the DVD+VCR to the audio left and right in jacks on your amplifier, receiver, or stereo system using the audio cables **(A1, A2)** supplied.

Connecting to an amplifier equipped with two channel digital stereo (PCM) or to an Audio/Video receiver equipped with a multi-channel decoder (Dolby Digital™, MPEG 2, or DTS)

1. Connect one of the DVD+VCR's DIGITAL AUDIO OUT jacks (COAXIAL **X**) to the corresponding in jack on your amplifier. Use an optional digital (coaxial **X**) audio cable.
2. You will need to activate the DVD+VCR's digital output. (See "*AUDIO*" on page 19).

Digital Multi-channel sound

A digital multi-channel connection provides the best sound quality. For this you need a multi-channel Audio/Video receiver that supports one or more of the audio formats supported by your DVD+VCR (MPEG 2, Dolby Digital and DTS). Check the receiver manual and the logos on the front of the receiver.

Caution:

Due to the DTS Licensing agreement, the digital output will be in DTS digital out when DTS audio stream is selected.

Notes

- If the audio format of the digital output does not match the capabilities of your receiver, the receiver will produce a strong, distorted sound or no sound at all.
- Six Channel Digital Surround Sound via digital connection can only be obtained if your receiver is equipped with a Digital Multi-channel decoder.
- To see the audio format of the current DVD in the on-screen display, press AUDIO.

Rear of DVD+VCR

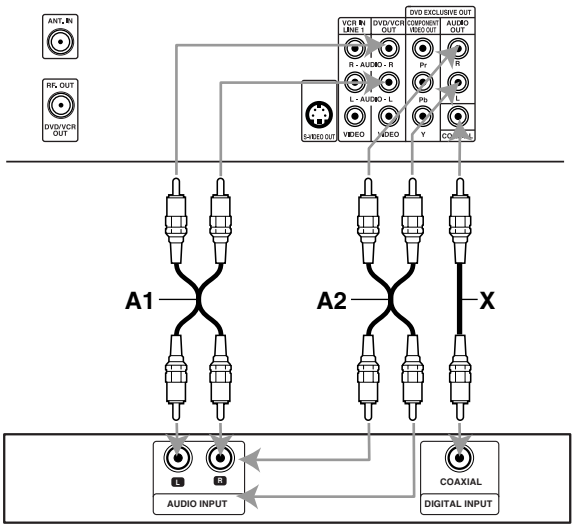

Amplifier (Receiver)

Accessory Audio/Video (A/V) Connections to DVD+VCR

Connect the VCR IN LINE 1 or AV INPUT jacks on the DVD+VCR to the audio/video out jacks on your accessory component, using the optional audio/video cables.

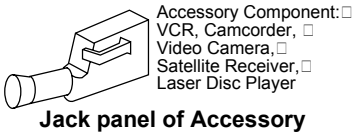

Jack panel of Accessory

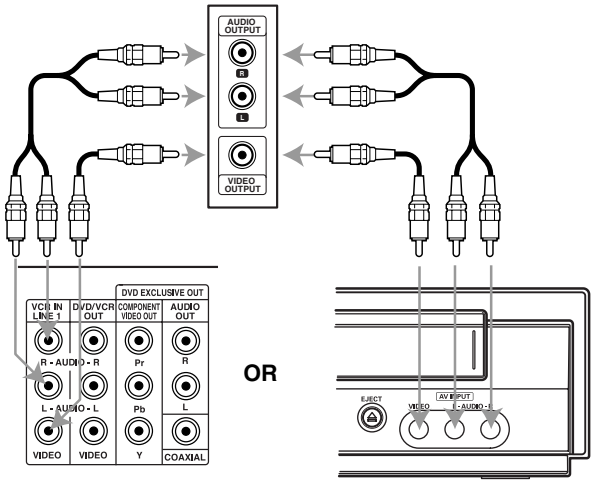

Rear of DVD+VCR **Front of DVD+VCR**

On-Screen Display (OSD)

Some of these functions will be displayed every time the VCR is operated.

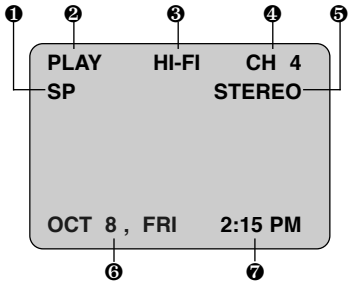

❶ TAPE SPEED DISPLAY
Shows the current tape speed.

❷ FUNCTION DISPLAY
Indicates the function in progress.

❸ HI-FI DISPLAY
Indicates when this unit is playing back tape recorded with Hi-Fi.

❹ CHANNEL DISPLAY
Indicates the selected channel (or LINE1, LINE2).

❺ STEREO/SAP DISPLAY (MONO is not displayed)
Shows the type of audio signal received by the VCR tuner.

❻ DATE DISPLAY
Shows the current date. (Month/Date/Day of the week format)

❼ CLOCK/COUNT/REMAIN DISPLAY
Shows the current time, the tape counter and remaining time on the tape.

Each press of the **SELECT/ENTER** changes the TV screen in the following sequence.

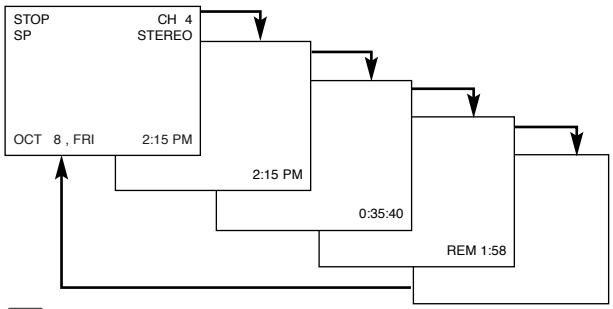

Notes

- The function displays can be seen displayed on the TV screen for 5 seconds.
- The clock (or tape counter, tape remaining) mode will continue until you press **SELECT/ENTER**.
- The tape counter and the remaining tape length indicator appear only when a cassette is inserted. Also, the remaining tape length indicator appears after any tape operation.

EASY INFORMATION

If the Extended Data Service (XDS) signals are provided along with normal TV signal in your area or during playback of a tape recorded with Extended Data Service (XDS) signals, the station ID, program title and program details are shown in the TV screen.
When viewing a channel with Extended Data Service (XDS) signals, press **SELECT/ENTER** then the station ID will appear on the TV screen. Press **SELECT/ENTER** again and the program details will appear on the TV screen.
When viewing a tape recorded with Extended Data Service (XDS) signals, press **SELECT/ENTER** twice then the program title and program details will appear on the TV screen.

PROGRAM DETAILS
LENGTH: Indicates the run length of a program.
TIME REMAINING: Indicates the remaining time of a program.
RATING: Indicates the rating of the current program (N/A, G, PG, PG-13, R, NC-17, X and Not Rated). The rating N/A means that the motion picture ratings are not applicable to this program.

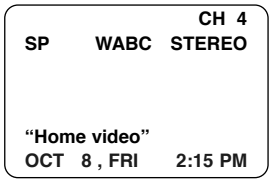

Easy Information Screen (Station ID)

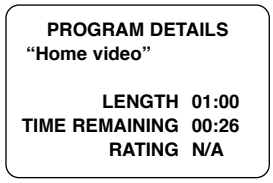

Easy Information Screen (Program details)

Setting the On-Screen Display

The SETUP, clock setting, and timer recordings are accessed conveniently with On-Screen Menu Displays that lead you through each step. The following pages describe the On-screen selections to be set.

Menu Selection

Your VCR allows remote control adjustment of several features.

1 **Press MENU and the MAIN menu will appear.**

2 **Select the desired menu with ▲/▼ button and then press SELECT/ENTER.**

Note

Menus remain on-screen for 3 minutes.

MAIN MENU

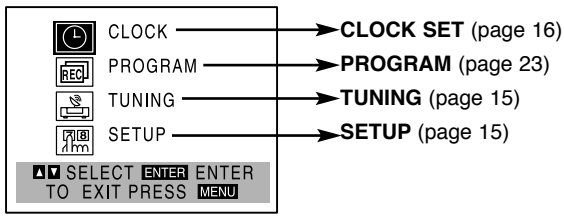

3 **Press MENU when finished.**

Setting the VCR Setup Menu

1 Press MENU and the MAIN menu will appear.

2 Press ▲/▼ to select the SETUP menu, then press SELECT/ENTER.
The SETUP menu will appear.

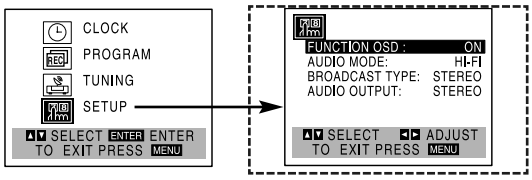

3 Press ▲/▼ to choose a desired option on the SETUP menu. Then press ◄/► to choose a desired setting.

FUNCTION OSD
The on-screen display of this DVD+VCR can be turned on or off.
- FUNCTION OSD can be switched between ON and OFF by pressing ◄/►.

AUDIO MODE
The DVD+VCR has two separate audio playback systems, the high quality VHS Hi-Fi system and standard NORMAL mono system. The same audio is generally recorded on both systems. The VHS Hi-Fi system plays on separate (left and right) channels, and the NORMAL system plays monaural sound. The normal track is always played so the cassette can be played on a DVD+VCR that does not have VHS Hi-Fi.
- AUDIO MODE can be switched between HI-FI and NORMAL by pressing ◄/►.

BROADCAST TYPE (STEREO/SAP/MONO)
Multichannel Television Sound (MTS) carries stereo and/or Second Audio Program (SAP) bilingual signals. Set this display to the desired position when both MTS stereo and SAP signals are received. When only one of the MTS signal is received, the DVD+VCR automatically selects the corresponding receiving mode (Stereo or SAP) regardless of the selected position. For normal operation, the display should be in the STEREO position. The DVD+VCR will then record a STEREO program when available, and record a mono program IF the program is NOT IN STEREO.
For weak STEREO and/or SAP broadcasts, changing the display to mono may give clearer sound.
- BROADCAST TYPE can be switched among STEREO, SAP, and MONO by pressing ◄/►.

AUDIO OUTPUT (STEREO/LEFT/RIGHT)
Used during playback [when AUDIO MODE (HI-FI/NORMAL) is in HI-FI position] for selecting the audio output signals from the AUDIO OUT terminals (L ch and R ch), and RF.OUT.
This display setting should normally be left in the stereo position, so that when a stereo tape is played, the stereo sound will be heard through the left and right channels. If a mono tape is played and the audio output is set to stereo, the same mono sound will be heard from both left and right channels.
- AUDIO OUTPUT can be switched among STEREO, LEFT, and RIGHT by pressing ◄/►.

4 Press MENU when finished.

Channel Selection

This DVD+VCR is equipped with a frequency synthesized tuner capable of receiving up to 181 channels. These include VHF channels 2-13, UHF channels 14-69 and CATV channels 1-125.

Preparation:
- Connect the DVD+VCR to the desired type of antenna or cable TV system, as shown in Connecting Antenna/Cable TV to DVD+VCR on page 11.

AUTO CHANNEL PROGRAMMING

1 Press MENU and the MAIN menu will appear.

2 Press ▲/▼ to select the TUNING menu, then press SELECT/ENTER.
The TUNING menu will appear.

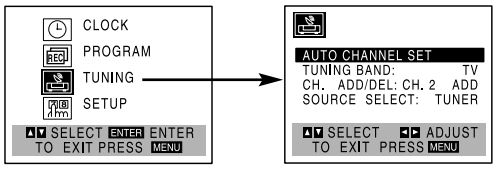

3 Press ▼ to choose the SOURCE SELECT option, then press ◄/► to select TUNER.
Press ◄/► repeatedly to switch among TUNER, LINE1 and LINE2.

4 Press ▲/▼ to choose the AUTO CHANNEL SET option, then press ◄/► to set the channel.
The tuner will automatically cycle through all available channels in the area and place them in the tuner's memory.

5 After the AUTO CHANNEL SET PROCEEDING is complete, make sure the TUNING BAND is set appropriately (TV or CATV) by pressing ▲/▼ and choosing the correct TUNING BAND (TV or CATV) by pressing ◄/► using the TUNING menu.
Remember, TV is for the air antenna reception, CATV is for cable or wireless cable connection.

6 Press MENU to return to the TV screen.

7 Use CH/TRK (▲/▼) or CHANNEL (▲/▼) on the front panel to cycle the DVD+VCR through the channels in memory.

TO ADD OR ERASE CHANNELS FROM MEMORY
This feature allows you to add or erase channels from memory manually.

1 Press ▼ to choose the CH. ADD/DEL option on the TUNING menu. Press ◄/► to select a channel to add or erase.

2 Press **SELECT/ENTER** to add or erase the channel. Repeat steps 1 and 2 to add or erase channels.

3 Press **MENU** to return to the TV screen.

Setting the Clock

The DVD+VCR gives you two ways to set the time and date: the Auto Clock Feature or manually. The Auto Clock Feature enables the DVD+VCR to set up the clock when the DVD+VCR is turned off.

Things to know before starting

- The clock uses the 12-hour system. (Be sure to set AM and PM correctly.)
- The initial Clock Setting is **JANUARY 1, 2004, 12:00 AM**.

Auto Clock Set

The Auto Clock Set feature is set to ON at the factory. In the ON setting, the DVD+VCR looks for a channel carrying XDS (Extended Data Services) information. XDS updates the clock using the Coordinated Universal Time.
The Auto Clock Feature enables the DVD+VCR to set up the clock when the DVD+VCR is turned off.

1 **Press MENU and the MAIN menu will appear.**

2 **Press ▲/▼ to choose the CLOCK menu.**
Press SELECT/ENTER and the CLOCK menu will appear.

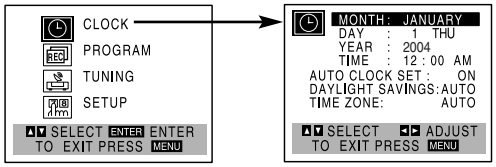

3 **Press ▼ to choose the AUTO CLOCK SET option.**
Press ◄/► to choose ON.
The Auto Clock Set feature is set to ON at the factory. In the ON setting, the DVD+VCR looks for a channel carrying XDS (Extended Data Services) information. XDS updates the clock using the Coordinated Universal Time.

4 **Press ▼ to choose the DAYLIGHT SAVINGS item.**
Press ◄ or ► to choose AUTO, ON or OFF.
If you choose AUTO, the VCR sets the clock using the DST information broadcast in the signal (channel).
If you choose ON, the VCR sets the clock when the Daylight Saving Time is started and ended.

5 **Press ▼ to choose the TIME ZONE item.**
Press ◄ or ► to choose the correct time zone (AUTO, EASTERN, CENTRAL, MOUNTAIN, PACIFIC, ALASKA or HAWAII).
If "AUTO" is selected as the time zone, the VCR sets the clock using the first Coordinated Universal Time information it finds in a broadcast signal.

6 **Press MENU when finished.**

7 **Turn off the DVD+VCR and the auto clock setting works.**

Note
There are cases where the TV station does not send or sends wrong date and/or time information and the DVD+VCR sets the incorrect time.
If this happens we recommend that you set the clock manually.

Manual Clock Set

Example: JULY 5, 2003 ; 2:15 AM

1 **Press MENU and the MAIN menu will appear.**

2 **Press ▲/▼ to choose the CLOCK menu.**
Press SELECT/ENTER and the CLOCK menu will appear.

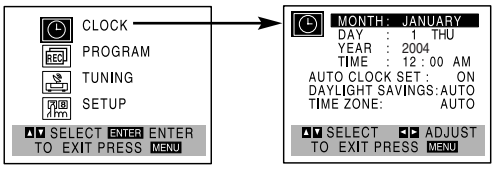

3 **Press ◄/► to choose the month.**

4 **Press ▼ to choose the DAY option.**
Use ◄/► to choose the day.
The day of the week will display automatically.

5 **Press ▼ to choose the YEAR option.**
Use ◄/► to choose the year.

6 **Press ▼ to choose the TIME option.**
Use ◄/► to choose the time.

7 **Press ▼ to choose the DAYLIGHT SAVINGS item.**
Press ◄ or ► to choose AUTO, ON or OFF.
If you choose AUTO, the VCR sets the clock using the DST information broadcast in the signal (channel).
If you choose ON, the VCR sets the clock when the Daylight Saving Time is started and ended.

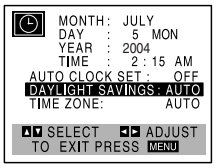

8 **Press MENU when finished.**

Note
If setting the clock manually, "AUTO CLOCK SET" must set to "OFF".
If set to "ON", an incorrect date and/or time will be entered again when the DVD+VCR is turned off.

⚠ **Caution:**
Before using the remote control, press the **DVD** button to select the device to be operated.

General Explanation

This manual gives basic instructions for operating the DVD+VCR. Some DVDs require specific operation or allow only limited operation during playback. When this occurs, the symbol ⊘ appears on the TV screen, indicating that the operation is not permitted by the DVD+VCR or is not available on the disc.

On-Screen Display

General playback status can be displayed on the TV screen. Some items can be changed on the menu.

On-screen display operation

1 **Press DISPLAY during playback.**

2 **Use ▲/▼ to select an item.**
The selected item will be highlighted.

3 **Use ◄/► to change the setting of an item.**
The number buttons can be also be used for setting numbers (e.g., title number). For some functions, press SELECT/ENTER to execute the setting.

Temporary Feedback Field Icons

- Title — Repeat Title (DVD)
- Chapter — Repeat Chapter (DVD)
- A - B — Repeat A-B
- Off — Repeat Off
- ■ — Resume play from this point
- ⊘ — Action prohibited or not available

Notes
- Some discs may not provide all of the features on the on-screen display example shown below.
- If no button is pressed for 10 seconds, the on-screen display disappears.
- You can change the desired status only when "◄ ►" mark appears on the On-screen display menu item.

DVD

Items		Function (Use ▲/▼ to select desired item)	Selection Method
Title Number	1 / 3	**Shows the current title number and total number of titles, and** skips to the desired title number.	◄ / ►, or Numbers, SELECT/ENTER
Chapter Number	1 / 12	**Shows the current chapter number and total number of chapters, and** skips to the desired chapter number.	◄ / ►, or Numbers, SELECT/ENTER
Time search	0:20:09	**Shows the elapsed playing time, and** searches the point by the elapsed time directly.	Numbers, SELECT/ENTER
Audio language and Digital Audio Output mode	1 ENG D 5.1 CH	**Shows the current audio soundtrack language, encoding method, and channel number, and** changes the setting.	◄ / ►, or AUDIO
Subtitle language	1 ENG	**Shows the current subtitles language, and** changes the setting.	◄ / ►, or SUBTITLE
Angle	1 / 1	**Shows the current angle number and total number of angles, and** changes the angle number.	◄ / ►, or ANGLE
Sound	3D SUR	**Shows the current sound mode, and** changes the setting.	◄ / ►

Initial Settings

In this menu system, there are several ways to customize the settings provided. Most menus consist of three levels to set up the options, but some require greater depth for the variety of settings. If you press SETUP, only the first level of the menu system will appear on the TV screen. The second and third level can be displayed by pressing ►. For navigating the menu levels, you will see " ► " on the right side of the menu label to help you to go to the next level.

To bring up and exit the Menu:
Press the SETUP to bring up the menu. The second press of SETUP will take you back to initial screen.

To go to the next level:
Press ► on the remote control.

To go back to the previous level:
Press ◄ on the remote control.

Initial Settings General Operation

1. **Press SETUP.**
   The setup menu appears. The screen will show the current setting for the selected item.
2. **Use ▲/▼ to select the desired item.**
3. **While the desired item is selected, press ► to move to the second level.**
4. **Use ▲/▼ to select the second desired item.**
5. **Press ► to move to the third level.**
6. **Press ▲/▼ to select the desired setting then press SELECT/ENTER to confirm your selection.**
   Some items require additional steps.
7. **Press SETUP to exit the setup menu.**

LANGUAGE

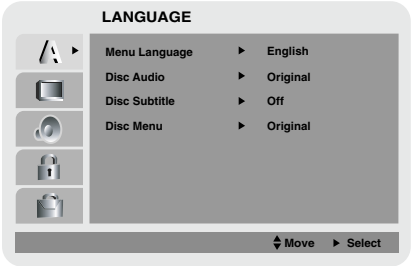

Menu Language

Select a language for the VCR and DVD's setup menu and information display.

Disc Language (Audio, Subtitle, Menu) DVD

Select a language for the disc's Audio, Subtitle, and Menu.
Original : The original language set for the disc is selected.
Other : To select another language, press number buttons to enter the corresponding 4-digit number according to the language code list on page 36. If you enter the wrong language code, press CLEAR.

DISPLAY

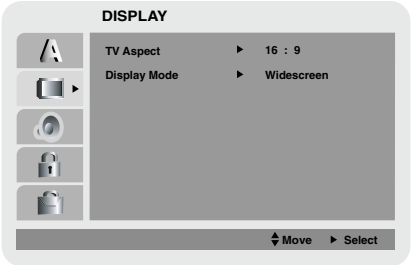

TV Aspect DVD

4:3: Select when a standard 4:3 TV is connected.
16:9: Select when a 16:9 wide TV is connected.

Display Mode DVD

The Display Mode setting works only when the TV Aspect mode is set to "4:3".
Letterbox: Displays theatrical images with masking bars above and below the picture.
Panscan: Select when a conventional TV set is connected. The video material formatted in the Pan & Scan style is played back in that style (Both sides of the picture are cut off).

AUDIO

Each DVD disc has a variety of audio output options. Set the player's Audio Output according to the type of audio system you use.

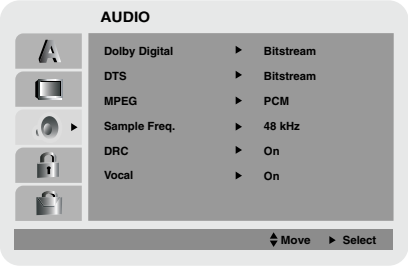

Dolby Digital

Bitstream: Select "Bitstream" if you connected the DVD Player's DIGITAL OUT jack to a Dolby Digital decoder (or an amplifier or other equipment with a Dolby Digital decoder).
PCM: Select when connected to a two-channel digital stereo amplifier. DVDs encoded in Dolby Digital will be automatically downmixed to two-channel PCM audio.

DTS

Bitstream: Select "Bitstream" if you connected the DVD Player's DIGITAL OUT jack to a DTS decoder (or an amplifier or other equipment with a DTS decoder).
Off: If you select "Off", the DTS signal through the DIGITAL OUT jack is not outputted.

MPEG

Bitstream: Select "MPEG" if you connected the DVD Player's DIGITAL OUT jack to a MPEG decoder (or an amplifier or other equipment with a MPEG decoder).
PCM: Select when connected to a 2-channel digital stereo amplifier. The DVD+VCR outputs sounds in the PCM 2ch format when you play a DVD video disc recorded on the MPEG1, or MPEG2 recording system.

Sample Freq. (Frequency)

To change the Sample Frequency setting, first select the desired Dolby Digital, DTS, and MPEG mode as indicated as above.
If your receiver or amplifier is NOT capable of handling 96 kHz signals, select 48 kHz. When this choice is made, this unit will automatically convert any 96 kHz signals to 48 kHz, so your system can decode them.
If your receiver or amplifier is capable of handling 96 kHz signals, select 96 kHz. When this choice is made, this unit will pass through each type of signal without any further processing.

Dynamic Range Control (DRC)

With the DVD format, you can hear a program's soundtrack in the most accurate and realistic presentation possible, thanks to digital audio technology. However, you may wish to compress the dynamic range of the audio output (the difference between the loudest sounds and the quietest ones). Then, you may listen to a movie at a lower volume without losing clarity of sound. Set DRC to "On" for this effect.

Vocal

Set Vocal to "On" only when a multi-channel karaoke DVD is playing. The karaoke channels on the disc will mix into normal stereo sound.

OTHERS

The Auto Play setting can be changed.

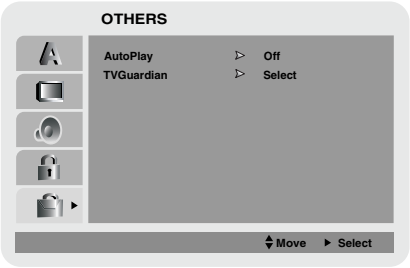

Auto Play DVD

You can set up the DVD+VCR so a DVD disc automatically starts playing whenever the DVD is inserted.
If Auto Play mode is set to "On", this DVD player will search the title which playback time is the longest and then play back the title automatically.
On: Auto Play function is activated.
Off: Auto Play function is not activated.

Note
The Auto Play function may not work for some DVDs.

TVGuardian VCR DVD

Details are on the 21 page.

LOCK

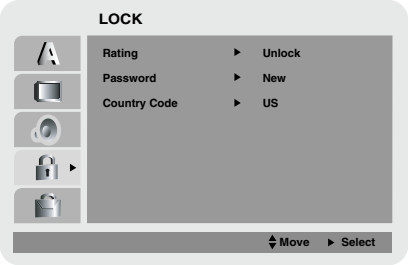

Rating DVD

Movies on DVDs may contain scenes not suitable for children. Therefore, discs may contain Parental Control information that applies to the complete disc or to certain scenes on the disc. These scenes are rated from 1 to 8, and alternatively, more suitable scenes are available for selection on some discs. Ratings are different in each country. The Parental Control feature allows you to prevent discs from being played by your children or to have certain discs played with alternative scenes.

1 **Select "Rating" on the Setup menu.**

2 **While "Rating" is selected, press ►.**

When you have already entered a password
Enter a 4-digit password using the numbered buttons to confirm the personal 4-digit security password, then press SELECT/ENTER.

3 **Select a rating from 1 to 8 using the ▲/▼ buttons. One (1) has the least playback restrictions. Eight (8) has the most playback restrictions.**
Unlock: *If you select Unlock, Parental Control is not active. The disc will play in full.*
Ratings 1 to 8: *Some discs contain scenes not suitable for children. If you set a rating for the player, all disc scenes with the same rating or lower will be played. Higher rated scenes will not be played unless an alternative scene is available on the disc. The alternative must have the same rating or the lower one. If no suitable alternative is found, playback will stop. You must enter the 4-digit password or change the rating level in order to play the disc.*

4 **Press SELECT/ENTER to confirm your rating selection, then press SETUP to exit the menu.**

Password DVD

Setting your password

If you change the rating level to "7" or lower, you must enter a 4-digit "password" to prevent playback of discs with higher ratings.

1 **Select "Password" on the Setup menu.**

2 **While "Password" is selected, press ►.**

3 **While "New" is selected, press SELECT/ENTER.**

4 **Enter a 4-digit password using the numbered buttons to create a personal 4-digit security password then press SELECT/ENTER.**

Tip
If you make a mistake before pressing SELECT/ENTER, press CLEAR to delete the entered all-digit or press ◄ to delete one by one and correct it.

5 **Enter the 4-digit password again and press SELECT/ENTER to verify.**

Changing the 4-digit password

1 Follow Steps 1-2 as shown above (Setting your password).
2 Enter the old password, then press SELECT/ENTER.
3 Select "Change" using ▲/▼ buttons then press SELECT/ENTER.
4 Enter the new 4-digit password, then press SELECT/ENTER.
5 Enter the 4-digit password again and press SELECT/ENTER to verify.

If you forget your 4-digit password

If you forget your password, to clear the current password, follow the procedure below.

1 Press SETUP to display the setup menu.
2 Use the Number buttons to enter the 6-digit number "210499".
3 Enter a new code as shown above (Setting your password).

Country Code DVD

Enter the code of a country/area which standards were used to rate the DVD video disc, referring to the list (See "Country Code List", page 37.).

1 **Select "Country Code" on the Setup menu.**

2 **While "Country Code" is selected, press ►.**

When you have already entered a password
Enter a 4-digit password using the numbered buttons to confirm the personal 4-digit security password, then press SELECT/ENTER.

3 **Select the first character using the ▲/▼ buttons.**

4 **Shift the cursor using ► button and select the second character using ▲/▼ buttons.**

5 **Press SELECT/ENTER to confirm your country code selection, then press SETUP to exit the menu.**

TVG® (TVGuardian®)

These settings are effective on Tape and DVD playback with closed caption signals only. TVG will not function on broadcast signals. To operate the TVG function during DVD playback, your TV must be capable of closed caption and the caption mode is set to ON.

Setting the TVG® (TVGuardian®)

TVGuardian® Technology embedded into the VCR will filter foul language from pre-recorded movies which have CC (Closed Caption). Words detected by TVG® will be muted from the program audio channel, and a version of the phrase, with the foul language converted to a suitable replacement word, can be displayed on the TV screen.
This is accomplished by a process which:

- reads the hidden signals for closed captions,
- detects offensive language,
- momentarily mutes the sound, and
- displays acceptable words and phrases.

TVG not accepting Universal Studio Related software :

- This built-in Foul Language Filter may not work on some VHS tapes and discs depending on their recording conditions. It will not function on Universal Studio software due to its format difference.

1 **Press SETUP and the Setup menu will appear.**

2 **Use ▲/▼ to select the OTHERS item.**

3 **While the OTHERS item is selected, press ► to move to the second level.**

4 **Use ▲/▼ to select the TVGuardian item.**

5 **Press ► to move to the third level.**

6 **press SELECT/ENTER.**
TVGuardian menu appears.

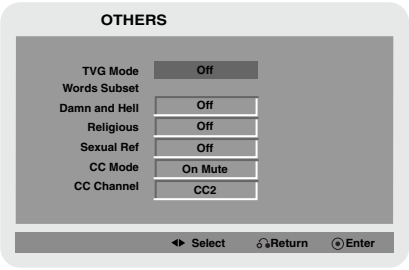

4 **Use ▲ ▼ ◄ ► to choose a desired setting.**

5 **Press SELECT/ENTER to confirm your setting, then press SETUP to exit the menu**

TVG Mode

Off : In the Off mode, TVG will not operate. Your DVD+VCR will operate as normal.
Tolerant : In the Tolerant mode, only the most offensive foul language will be filtered.
Moderate : In the Moderate mode, more offensive words will be filtered.
Strict : In the Strict mode, all the foul language words known to the TVG process will be filtered.

Words Subset

In addition to the main TVG Modes, five additional sets of words are available to the user to select.

- **Damn and Hell**
  This set includes variations of “Damn” and “Hell”.
- **Religious**
  This set includes numerous Religious words, such as God and Jesus. One might want to turn this Word Set to OFF if watching religious programming material.
- **Sexual Ref**
  This set includes various sexually related words.
- **CC Mode**
  The TVG processing allows the user the choice of three possible settings of CC Mode. By default, the TVG processing only displays captions to the user when foul language is detected. Other settings are described below.

  On Mute (default): Whenever Foul Language is detected, captions are displayed with a suitable replacement word substituted for the foul language, and audio is muted for the foul language.
  Always: You can see all captions, whether or not any foul language was detected. But like the ON MUTE mode, captions are displayed with a suitable replacement word substituted for the foul language, and audio is muted for the foul language.
  Off: You cannot see captions. Whenever Foul Language is detected, only audio is muted.
- **CC Channel**
  To operate the TVG function during DVD or VCR Playback (Prerecorded only), the TVG will block the foul language when turned on, but your television must be capable of closed caption and it must be turned on to get the alternative word on the screen.

  CC1: Set your TV to CC1(Closed Caption 1) mode.
  CC2: Set your TV to CC2(Closed Caption 2) mode.

Note
In case of “TVG Mode” set to “Off”, it is impossible for user to set of Words Subset.

TVGuardian® and TVG® are registered trademarks of Principle Solutions, Inc.

Normal Playback

Preparation:
- Turn on the TV.
- Tune the TV to the DVD+VCR output channel (CH 3 or 4) or set the TV's source selector to VIDEO.
- If a direct VIDEO/AUDIO connection is made between the DVD+VCR and the TV, set the TV's source selector to VIDEO.
- Set the Output Source to VCR as shown in "Setting the Output Source" on page 6.

1 Insert a prerecorded video cassette.
The ⊂⊃ indicator will light and the DVD+VCR will power-up automatically.
- Make sure that the ⏲ indicator in the display window is not lighted. If it is, press **POWER** once.
- If a tape without a safety tab is inserted, the unit will start playback automatically.

2 Press PLAY (▷) once.
PLAY appears on the TV screen .
- It is not necessary to select the tape speed for playback. It will be automatically selected by the DVD+VCR.
- During playback, the **TV/VCR** selector switches to VCR mode automatically.

3 Press STOP (■) to stop playback.
STOP appears on the TV screen.
- If the tape reaches the end before STOP (■) is pressed, the DVD+VCR will automatically stop, rewind, eject, and will turn itself off (Only when no disc).

Tracking Control

Auto Tracking
The automatic tracking function adjusts the picture to remove snow or streaks.
The AUTO TRACKING function works in the following cases:
- A tape is played back for the first time.
- Tape speed (SP, LP, SLP) changes.
- Streaks or snow appear because of scratches on the tape.

Manual Tracking
If noise appears on the screen during playback, press either **CH/TRK (▲/▼)** on the remote control or **CHANNEL (▲/▼)** on the front panel until the noise on the screen is reduced.
- In case of vertical tremble, adjust these controls very carefully.
- Tracking is automatically reset to normal when the tape is ejected or the power cord is unplugged for more than 3 seconds.

Special Effect Playbacks

Special effects playback notes
- Horizontal lines (noise bars) will appear on the TV screen. This is normal.
- The audio is automatically muted during special effect modes, so there is no sound during search.
- During the high-speed picture search modes, a short period is needed to stabilize tape speed when re-entering the PLAY mode. Slight interference may be observed during this period.

Search

This function lets you search for a desired tape section in either direction: forward or reverse quickly and visually.

1 Press BACKWARD (|◀◀) or FORWARD (▶▶|) during playback.
The DVD+VCR will be activated in the SEARCH mode.
- If the DVD+VCR is left in the SEARCH mode for more than 3 minutes, the DVD+VCR will automatically enter the PLAY mode, to protect the tape and video heads.

2 To return to playback, press PLAY (▷).

Still Picture and Frame-by-Frame Playback

1 Press PAUSE/STEP (❚❚) during playback.
Still picture will appear on the TV screen.
- If a still picture vibrates vertically, stabilize it by pressing CH/TRK (▲/▼) on the remote control.
- If the DVD+VCR is left in the STILL mode for more than 5 minutes, the DVD+VCR will automatically enter the STOP mode to protect the tape and video heads.

2 Press PAUSE/STEP (❚❚) repeatedly to advance the video picture one frame at a time while viewing a still picture.

3 To return to playback, press PLAY (▷).

Slow Motion

1 During the still mode, press FORWARD (▶▶|).
The tape will be played back at a speed 1/19 times slower than the normal speed.
- During slow playback, use CH/TRK (▲/▼) on the Remote Control to minimize noise bands.
- If slow motion mode continues for more than 3 minutes, the DVD+VCR will automatically change to playback mode.

2 To return to playback, press PLAY (▷).

Ad JUMP (Advertisement Jump)

This is useful for skipping commercials or short program segments.

1 Press Ad JUMP during the playback mode.
The tape will be fast forward picture search through 30 seconds of recording.
- The skipping time can be extended by pressing Ad JUMP.
- Subsequent presses result in advancing the fast forward picture search time by 30-second increments (maximum 3 minutes).

2 When the search is completed, the DVD+VCR will go into playback mode automatically.

Normal Recording

Preparation:
- Turn on the power of both the DVD+VCR and TV.
- Tune the TV to the DVD+VCR output channel (CH 3 or 4) or set the TV's source selector to VIDEO.
- If a direct VIDEO/AUDIO connection is made between the DVD+VCR and the TV, set the TV's source selector to VIDEO.

1 Insert a video cassette that the safety tab intact.

2 Select the desired channel by using CH/TRK (▲/▼).
- If you are recording from another source via audio/video input jacks (at the Rear or Front panel), select the LINE1 or LINE2 by pressing **INPUT**.

3 Set the desired recording speed (SP or SLP) by pressing SP/SLP.
- This DVD+VCR is not designed to record in LP mode.

4 Set the MTS mode as desired (See page 15, 26).

5 Press REC (●) once.
Recording will start. (The REC indicator will light in the display window.)
- REC indicator appears only when the Output Source is set to VCR.
- If a cassette with no safety tab is loaded, the cassette will be ejected automatically.

6 Press STOP (■) to stop recording.
If the tape reaches the end before STOP (■) is pressed, the DVD+VCR will automatically stop, rewind, eject, and it will turn itself off (Only when no disc).

To pause the recording

1 Press PAUSE/STEP (❚❚) to pause the tape during recording.
The REC indicator will flash in the display window.

2 When you want to continue recording, press PAUSE/STEP (❚❚) or press REC (●).
- After 5 minutes in pause mode, the tape will be stopped automatically to protect the tape and the video heads.

To record one TV program while watching another

1 Press TV/VCR to select the TV mode during recording.
The TV indicator appears.

2 Using the TV, select the channel to be viewed.

Tips

Always use PAUSE/STEP (❚❚) for the best results when making changes during recording.
For example: To change channels during recording, first press PAUSE/STEP (❚❚) to put the unit in pause mode. Then select the desired channel on the DVD+VCR, and press PAUSE/STEP (❚❚) again to resume recording.

Timer Recording

This DVD+VCR can be programmed to record up to 8 programs within a period of 1 year. For unattended recording, the timer needs to know the channels to be recorded and the starting and ending times.

Things to know before starting
- If you try to set the program timer before setting the clock, PLEASE SET THE CLOCK appears for a moment and then CLOCK menu appears on the TV screen. Set the time and date before proceeding.
- Make sure a tape is in the DVD+VCR and the safety tab is in place or the tape will be automatically ejected.

Preparation:
- Turn on the power of both the DVD+VCR and the TV.
- Be sure the TV is set to the DVD+VCR output channel (3 or 4).
- Make sure the TUNING BAND in the TUNING menu is set appropriately (TV or CATV).

1 Press MENU and the MAIN menu will appear.

2 Use ▲/▼ to choose the PROGRAM menu.

3 Press SELECT/ENTER to go to the PROGRAM menu.
The PROGRAM menu will appear.
- If all programs have already been entered, FULLY PROGRAMMED message will appear for a moment and then PROGRAM 1 will appear on the TV screen.

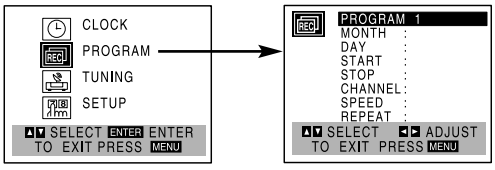

4 Use ◀/▶ to choose the PROGRAM No. (1-8).

5 Use ▼ to choose the MONTH option.
Use ◀/▶ to choose the desired month.

6 Use ▼ to choose the DAY option.
Use ◀/▶ to choose the desired day.

7 Use ▼ to choose the START option.
Use ◀/▶ to choose the desired start time.

8 Use ▼ to choose the STOP option.
Use ◀/▶ to choose the desired stop time.

9 Use ▼ to choose the CHANNEL option.
Use ◀/▶ to choose the desired channel (Channel, LINE1 or LINE2).

Cable Users: If you have CABLE TV and used Cable Box in Connecting Antenna/Cable TV to DVD+VCR (page 11), using a cable box converter, you must set the channel in this step to match the cable box output channel (usually CH 3 or 4). Change channels on the cable box instead of channels on the DVD+VCR.

10 **Use ▼ to choose the SPEED option.**
Use ◀/▶ to choose the desired recording speed (AUTO, SP or SLP).

- AUTO mode determines how long tape is left and switches speed from SP to SLP, if necessary, to complete recording the program. There will be some picture and sound distortion at the point of the speed change.

11 **Use ▼ to choose the REPEAT option.**
Use ◀/▶ to choose the desired repeat (ONCE, WEEKLY or DAILY).

ONCE event....for recording up to 8 programs on a single day or over the days within a period of 1 year.
WEEKLY event....for recording up to 8 programs on a certain day of every week.
DAILY event....for recording up to 8 programs at the same time(s) from Monday through Friday.

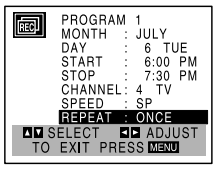

Tip

If the input data is wrong, use ▲ to select the data and correct it using ◀/▶.

12 **Press MENU, the program will be memorized at the DVD+VCR.**

- ⏲ indicator lights in the display window.
- If the program preset time is past, the PAST TIME PROGRAMMED message will appear on the TV screen. Return to the incorrect program and program it with the correct time.
- If you had entered a past date, the timer recording will be performed on that date of the next year.
- Additional programs may be entered by repeating steps **1-12**.

Cable Users: If your cable hookup is via a TV converter box, you can program multiple recordings only on the converter box output channel. This is because the converter determines what channel you view through your DVD+VCR.

Tip

If you have finished programming and you want to set the DVD+VCR to record the programs you have entered.
MAKE SURE YOU HAVE INSERTED A TAPE INTO THE DVD+VCR. The DVD+VCR is now set to record the preset programs.

Note

If the power fails or the DVD+VCR is unplugged from the AC outlet, the correct clock time and timer settings are kept in memory for approximately 3 seconds. After 3 seconds, the clock and program timer will be reset when power is restored. Reset the clock according to instructions.

After setting up a timer recording, recording will start if no other timer recordings are scheduled to occur at the same time (see “Program Priority” at right).

Checking (Erasing) the Timer Program

Programming can be checked whenever the DVD+VCR is turned on.

1 Press MENU and the MAIN menu will appear.
2 Use ▲/▼ to choose the PROGRAM menu. Press SELECT/ENTER and the PROGRAM menu will appear.

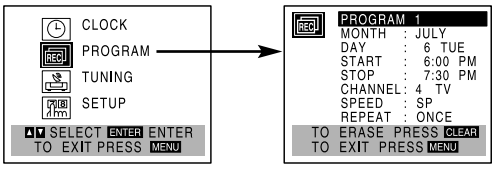

3 Use ◀/▶ to select a program you want to check or erase. If you want to erase the program, press CLEAR.
4 Press MENU to return to the TV screen.

Program Priority

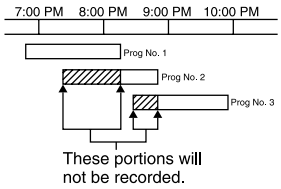

If the starting and ending times of two or more timer recordings overlap on the same day, priority is given to the earliest recording. For example, in the diagram at left Program number 2 will not be recorded until Program number 1 is finished. The first part of Program number 2 will not be recorded. Likewise, Program number 3 will not be recorded until Program number 2 is finished, and so on.

Instant Timer Recording

Instant Timer Recording allows you to make a recording easily of a preset length without using the program timer.

Preparation:
- Turn on the power of both the DVD+VCR and the TV.
- Be sure the TV is tuned to the DVD+VCR output channel (3 or 4).
- If a direct VIDEO/AUDIO connection is made between the DVD+VCR and the TV, set the TV's source selector to VIDEO.

1 Insert a video cassette with the safety tab intact.

2 Select the desired channel by using CH/TRK (▲/▼) or number (0-9).
The channel number appears on the TV screen.
- If you are recording from another source via audio/video input jacks (at the Rear or Front panel), select the LINE1 or LINE2.

3 Set the desired recording speed (SP or SLP) by pressing SP/SLP.
The tape speed will appear on the TV screen.

4 Press REC (●) twice.
The menu as illustrated, will appear on the TV screen.
- Recording will start. (The ⏲ indicator will light)

5 Press REC (●) repeatedly to select the recording time length.
At the end of the recording, the DVD+VCR will stop recording and shut off.
- During Instant Timer Recording, changing the channel on the DVD+VCR will not be possible.
- You can stop the recording by pressing STOP (■).

INSTANT TIMER RECORD MENU

INSTANT TIMER RECORD	
CHANNEL	2
SPEED	SP
START	NOW
LENGTH	0H30M

0H30M ..... 9H00M → 0H00M

Length Display (each additional press of REC (●) increases recording time 30 minutes)

Checking the Recording Time

Press REC (●) once to check the recording time. The recalled setting will automatically return to the TV screen after 6 seconds.

To extend the Recording Time

The recording time can be extended anytime by pressing REC (●).
Subsequent presses result in advancing the recording time by 30-minute increments.

Notes
- If you press PAUSE/STEP (❚❚) during instant timer recording, the DVD+VCR will enter the recording pause mode. Instant timer recording is cancelled.
- If the DVD+VCR is set to "0H00M", the DVD+VCR goes to normal recording mode.

Dubbing and Editing

If you wish to edit or dub your camcorder (or another VCR) recordings to this DVD+VCR, the rear (or Front) panel mounted Audio and Video (A/V) input jacks make the connections quick and easy. These direct A/V jacks will also provide better picture results than using the RF jack on the rear panel.

1 Connect the camcorder's (or another VCR's) A/V outputs to your DVD+VCR as illustrated on page 13.

2 Set the input channel "LINE2". (press INPUT to select LINE2.)
- If you have connected your DVD+VCR to the A/V input jacks on the rear of DVD+VCR, you should select the input channel LINE1 by pressing **INPUT** twice.

3 Play the tape in the camcorder (or another VCR). If you have a TV attached to your DVD+VCR, you can see the video playing.

4 When you desire recording to begin, press DVD+VCR's REC (●) once to start.
- You can stop the recording by pressing STOP (■).

Note
Before recording, please confirm the recording start position.

Copying from DVD to VCR

This unit allows you to copy the contents of a DVD to a VHS tape.

Note
If the DVD you are attempting to copy is copy protected, you will not be able to copy the disc. It is not permitted to copy Macrovision encoded DVDs. "Lock" is displayed in the display window.

1 Insert Disc
Insert the disc you wish to copy in the DVD deck and close the disc tray.

2 Insert VHS Tape
Insert a blank VHS video tape into the VCR deck.

3 Press PLAY (▷) on the DVD deck.
The DVD will go into play mode
- If the DVD disc menu appears, you may need to press the PLAY (▷) manually to begin copying.

4 Press REC (●) on the VCR deck or on the remote control.
- The DVD+VCR will go into Record mode.
- "COPY" indicator will light.

5 Stop the Copy Process
When the DVD is finished playing, press STOP (■) to end the copy.
You must stop the Copy process manually when the DVD movie ends, otherwise the unit may record over and over again.

Note
When you stop the DVD playback during copying, the recording on VCR is stopped automatically.

VHS Hi-Fi Stereo System/ MTS Broadcast

This DVD+VCR is equipped with the VHS Hi-Fi audio sound system for recording and playback. The information below gives a brief description of Hi-Fi audio and how to record and play a tape in the Hi-Fi audio mode.

Playback with Hi-Fi Stereo Audio Sound

A stereo TV with AUDIO/VIDEO input jacks or a stereo audio system is required for correct stereo playback. To experience the full and rich stereo sound available with Hi-Fi recorded tapes, we recommend the connection of this unit to a home stereo audio system.

1 Set the AUDIO MODE option to HI-FI on the SETUP menu .

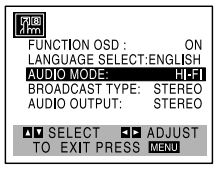

2 Set the AUDIO OUTPUT option to STEREO position.

(STEREO) POSITION: The left channel sound (L) is heard from the left speaker and the right channel sound (R) is heard from the right speaker.
(LEFT) POSITION: The left channel sound (L) is heard from both speakers.
(RIGHT) POSITION: The right channel sound (R) is heard from both speakers.

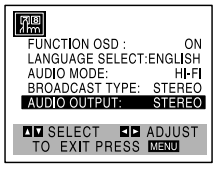

3 Press MENU.

4 Insert a cassette and press PLAY (▷).
Adjust volume at your stereo system.

MTS (Multi-Channel TV Sound)

This DVD+VCR will decode MTS stereo and bilingual (SAP) off-the-air broadcast sound signals. It also decodes stereo TV sound from local cable companies, as long as they operate on assigned cable frequencies and use the EIA-recommended MTS stereo/bilingual TV sound system.

Multichannel TV Sound Indicator (MTS)

Shows On-screen as illustrated below when **SELECT/ENTER** is pressed.

- One or both of the indicators will light, depending on the MTS broadcast.

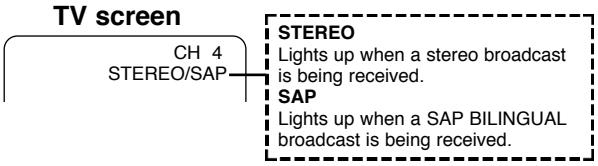

If only STEREO appears on the TV screen.
The DVD+VCR can record in stereo onto the VHS Hi-Fi audio tracks when the BROADCAST TYPE option is in the STEREO position. The DVD+VCR will also record mono audio onto the mono audio track.

If only SAP appears on the TV screen.
Set the BROADCAST TYPE option to SAP.

If STEREO/SAP appears on the TV screen
Use the BROADCAST TYPE option to select the desired recording mode (STEREO or SAP).

SAP (Second Audio Program) Recording

Some stations transmit a Second Audio Program, which is used for a second language or additional information. When the station broadcasts a Second Audio Program, follow the procedure below to record the SAP.

1 Insert a video cassette with the safety tab intact.

2 Set the BROADCAST TYPE option to SAP (SETUP menu).
Do this only if the SAP appears on the TV screen or you know the program will use the SAP.

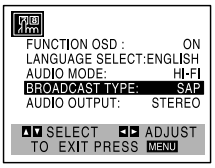

3 Press MENU.

4 Set the desired recording speed (SP or SLP) by pressing SP/SLP.

5 Select the desired channel. The SAP should appear on the TV screen.

6 Press REC (●) once
You are now recording the program you see and hear on the TV.

7 Press STOP (■) to stop recording.

Tape Counter Memory Feature

Real-Time Counter

Shows length of tape run in hours, minutes, and seconds. Press **CLK/CNT** to select the real-time counter display.
Every press of **CLK/CNT** changes the TV screen as illustrated below.

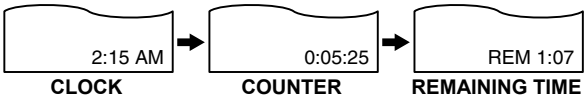

- Counter changes to “0:00:00” when the cassette is ejected.
- The real-time counter does not operate if nothing is recorded on the tape.
- The real-time counter will not work unless a tape is inserted.

Counter Memory Function

This is useful if there is a section of tape you want to view immediately after recording or if you want to return to the same point several times.

1. **Begin recording or playing a tape.**
2. **Press CLK/CNT repeatedly to display the real-time counter appears on the TV screen.**
3. **At the point that you want locate later, reset the real-time counter to “0:00:00” by pressing CLEAR.**
4. **Continue to play or record.**
5. **Press STOP (■) when recording or playback finishes.**
6. **Press BACKWARD (I◀◀).**
   The tape automatically stops when the tape counter returns to about “0:00:00”.

Tape Remaining

This function allows the time of the remaining tape to be displayed during recording or playback.
Press **CLK/CNT** until the REM indicator displays on the TV screen during recording or playback.

Note

The remaining tape length indicator may not be displayed correctly depending on the condition of the tape and the kind of the tape (T-140, T-160, or T-210 etc)

Additional Information

- In manual recording, Timer recording, Instant Timer Recording, playback, or fast forward modes, the DVD+VCR automatically starts rewinding the tape at the end of the tape. The cassette will stop at the beginning of the tape and be ejected, and the DVD+VCR will turn itself off (Only when no disc).
- After you have finished using the DVD+VCR, rewind, eject, and remove the cassette. Place the cassette in its protective sleeve to protect it from dust. It is not necessary to rewind the cassette before removing it, but if you do, it will be ready to play or record the next time you use it.
- Be sure the DVD+VCR Channel Selector is on the correct channel you wish to record. The channel that is being recorded can always be checked by setting the television on the DVD+VCR channel (3 or 4) and pressing the **TV/VCR** selector to turn off the DVD+VCR’s TV indicator.
- Do not attempt to hook up more than one television set to the DVD+VCR for either recording or playback.

Auto Play System

This DVD+VCR features automatic playback.
Load a cassette (with the safety tab removed).

- The Output Source is changed to VCR mode automatically.
- The power turns on automatically and playback begins.
- At the end of the tape, the DVD+VCR stops, then rewinds.
- The cassette is ejected after rewinding and turn itself off automatically.

Note

Auto power off does not function during regular DVD play mode. (DVD+VCR power stays on.)

Playing DVD

Playback Setup DVD

- Turn on the TV and select the video input source connected to the DVD+VCR.
- Audio system: Turn on the audio system and select the input source connected to the DVD+VCR.
- Set the Output Source to DVD as shown in "Setting the Output Source" on page 6.

1 Press OPEN/CLOSE (⏏) to open the disc tray.

2 Load your chosen disc in the tray, with the playback side down.

3 Press OPEN/CLOSE (⏏) to close the tray.
Playback starts automatically. If playback does not start, press PLAY (▷).
In some cases, the disc menu might appear instead.

If a menu screen is displayed

The menu screen may be displayed first after loading a DVD which offers a menu.

DVD
Use the ◀/▶/▲/▼ buttons to select the title/chapter you want to view, then press SELECT/ENTER to start playback.
Press TITLE or DISC MENU to return to the menu screen.

4 To stop playback at any other time, press STOP.
This is RESUME STOP mode.
To exit RESUME STOP mode, press STOP again.

Notes

- If Parental Control is set and the disc is not within the Rating settings (not authorized), the 4-digit password must be entered and/or the disc must be authorized (see "LOCK", on page 20).
- DVDs may have a region code.
  Your DVD+VCR will not play discs that have a region code different from your DVD+VCR. The region code for this DVD+VCR is 1 (one).
- Do not keep an image or on-screen displayed for a long time.

General Features

Note

Unless stated otherwise, all operations described use the remote control. Some features may also be available on the Setup menu.

Moving to another TITLE DVD 1/3

When a disc has more than one title, you can move to another title as follows:

- Press DISPLAY then press ▲/▼ to select the title icon. Then press the appropriate numbered button (0-9) to select a title number.
- To go directly to any title at STOP mode (or RESUME STOP mode), press the number button (0-9).

Moving to another CHAPTER

DVD 1/12

When a title on a disc has more than one chapter, you can move to another chapter as follows:

- Press BACKWARD (⏮) or FORWARD (⏭) briefly during playback to return to the beginning of the current chapter or to select the next chapter.
- Press BACKWARD (⏮) twice briefly to step back to the previous chapter.
- To go directly to any chapter during playback, press DISPLAY. Then, press ▲/▼ to select chapter icon. Then, enter the chapter number using the numbered buttons (0-9).

Slow Motion DVD

1 Press PAUSE/STEP (❚❚) during playback.
The DVD+VCR will now go into PAUSE mode.
2 Press BACKWARD (⏮) or FORWARD (⏭) during pause mode.
The DVD+VCR will enter SLOW mode.
3 Use BACKWARD (⏮) or FORWARD (⏭) to select the required speed: ◀❚ 1/16, ◀❚ 1/8, ◀❚ 1/4 or ◀❚ 1/2 (backward), or ❚▶ 1/16, ❚▶ 1/8, ❚▶ 1/4 or ❚▶ 1/2 (forward).
4 To return to playback, press PLAY (▷).

General Features (Continued)

Still Picture and Frame-by-Frame Playback

DVD

1 Press PAUSE/STEP (❚❚) during playback.
The DVD+VCR will now go into PAUSE mode.
2 You can advance the picture frame by frame by pressing PAUSE/STEP (❚❚) repeatedly on the remote control.
3 To return to playback, press PLAY (▷).

Search DVD

1 Press and hold BACKWARD (I◀◀) or FORWARD (▶▶I) for about two seconds during playback.
The DVD+VCR will now go into SEARCH mode.
2 Press and hold BACKWARD (I◀◀) or FORWARD (▶▶I) repeatedly to select the required speed: ◀◀X2, ◀◀X4, ◀◀X16, ◀◀X100 (backward) or ▶▶X2, ▶▶X4, ▶▶X16, ▶▶X100 (forward).
3 To return to playback, press PLAY (▷).

Repeat DVD Title

DVD Video Discs - Repeat Chapter/Title/Off

1 To repeat the currently playing chapter, press REPEAT.
The Repeat Chapter icon appears on the TV screen.
2 To repeat the title currently playing, press REPEAT a second time.
The Repeat Title icon appears on the TV screen.
3 To exit Repeat mode, press REPEAT a third time.
The Repeat Off icon appears on the TV screen.

Repeat A-B DVD A - B

To repeat a sequence:

1 Press A-B at your chosen starting point.
"A-" appears briefly on the TV screen.
2 Press A-B again at your chosen end point (after more than 3 seconds).
"A-B" appears briefly on the TV screen, and the repeat sequence begins.
3 To cancel the sequence, press A-B.

Time Search DVD 0:20:09

The Time Search function allows you to start playing at any chosen time on the disc.

1 Press DISPLAY during playback. The on-screen display appears on the screen.
The Time Search box shows the elapsed playing time of the current disc.
2 Within 10 seconds, use ▲/▼ to select the Time Search icon in the on-screen display.
The "-:--:--" appears in the Time Search box.
3 Within 10 seconds, use the numbered buttons to enter the required start time. Enter hours, minutes and seconds from left to right in the box.
If you enter the wrong numbers, press CLEAR to remove the numbers you entered. Then enter the correct numbers.
4 Within 10 seconds, press SELECT/ENTER.
Playback starts from the selected time on the disc. If you enter an invalid time, playback will continue from the current point.

3D Surround DVD 3D SUR

This unit can produce a 3D Surround effect, which simulates multi-channel audio playback from two conventional stereo speakers, instead of the five or more speakers normally required to listen to multi-channel audio from a home theater system.

1 Press DISPLAY during playback.
2 Use ▲/▼ to select the sound icon.
The sound option will be highlighted.
3 Use ◀/▶ to to select "3D SUR".
To turn off the 3D Surround effect, select "Normal".

General Features (Continued)

Zoom DVD

The Zoom function allows you to enlarge the video image and to move through the enlarged image.

1 Press ZOOM during playback or still playback to activate the Zoom function.
The square frame will be displayed in the right bottom of the picture. If no button is pressed for more than 10 seconds, the square frame will disappear.
Each press of the ZOOM button changes the TV screen in the sequence shown below.

400% size → 1600% size → multi zoom mode → normal size

2 Use the ◄ ► ▲ ▼ buttons to move through the zoomed picture (400% or 1600%), or to enlarge and reduce the picture size through the multi zoom mode.

3 To resume normal playback, press ZOOM repeatedly until the normal picture appears.

Note

- The zoom function may not work for some DVDs.
- The zoom function may not work on multi-angle scenes.

Marker Search DVD

You can start playback from a memorized point. Up to nine points can be memorized.
To enter a mark, follow these steps.

1 During disc playback, press MARKER when playback reaches the spot that you want to memorize.
The Marker icon will appear on the TV screen briefly.

2 Repeat step 1 to enter up to nine Marker points on a disc.

To Recall a Marked Scene

1 During disc playback, press SEARCH.
The Marker Search menu will appear on the screen.

2 Within 10 seconds, press ◄/► to select a Marker number that you want to recall.

3 Press SELECT/ENTER.
Playback will start from the Marked scene.

4 To remove the MARKER SEARCH menu, press SEARCH.

To clear a Marked Scene

1 During disc playback, press SEARCH.
The Marker Search menu will appear on the screen.

2 Within 10 seconds, press ◄/► to select a Marker number that you want to erase.

3 Press CLEAR.
The Marker number will be erased from the list.

4 Repeat steps 2 and 3 to erase additional Marker numbers.

5 To remove the MARKER SEARCH menu, press SEARCH.

Special DVD Features

Checking the contents of DVD Video discs: Menus

DVDs may contain menus that allow you to access special features. To use the disc menu, press DISC MENU. Then, press the appropriate number button to select an option. Or, use ◄/►/▲/▼ buttons to highlight your selection, then press SELECT/ENTER.

Title Menu DVD

1 Press TITLE.
If the current title has a menu, the menu will appear on the screen. Otherwise, the disc menu may appear.

2 The menu can list camera angles, spoken language and subtitle options, and chapters for the title.

3 To remove the title menu, press TITLE.

Disc Menu DVD

1 Press DISC MENU.
The disc menu is displayed.

2 To remove the disc menu, press DISC MENU again.

Camera Angle DVD

If the disc contains scenes recorded at different camera angles, you can change to a different camera angle during playback.

- Press ANGLE repeatedly during playback to select a desired angle.
The number of the current angle appears on the TV screen.

Changing the Audio Language DVD

Press AUDIO repeatedly during playback to hear a different audio language or audio track.

Subtitle DVD

Press SUBTITLE repeatedly during playback to see the different subtitle languages.

Note

If ⊘ appears, the feature is not available on the disc.

Playing an Audio CD and MP3 Discs CD MP3

The DVD+VCR can play an audio CD. Also, the DVD+VCR can play MP3 formatted recordings on CD-ROM, CD-R or CD-RW discs.
Before playing MP3 recordings, read the notes on MP3 Recordings on the right side of this page.

1 Insert a disc and close the tray.
Audio CD; Audio CD menu appears on the TV screen. Go to step 3.
MP3 disc; The MP3 menu appears on the TV screen. Go to step 2

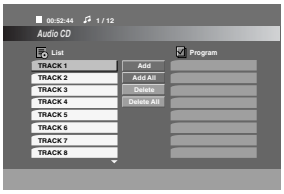

Audio CD Menu

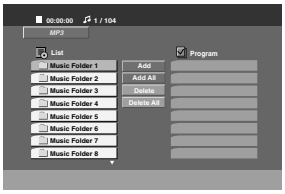

MP3 Menu

2 Press ▲/▼ to select a folder then press SELECT/ENTER.
A list of files in the folder appears.

3 Press ▲/▼ to select a track then press PLAY (▷) or SELECT/ENTER.
Playback starts.
During playback, the current track's elapsed playing time will appear on the display window and menu.
Playback will stop at the end of the disc.

Tips
- Press and hold ▼ to move to the next page.
- Press and hold ▲ to move to the previous page.
- If you are in a file list on the MP3 menu and want to return to the Folder list, use the ▲/▼ to highlight and press SELECT/ENTER.

4 To stop playback at any other time, press STOP (■).

Notes on MP3 Recordings

About MP3

- An MP3 file is audio data compressed by using the MPEG1 audio layer-3 file-coding scheme. We call files that have the ".mp3" file extension "MP3 files".
- The player can not read an MP3 file that has a file extension other than ".mp3".

MP3 Disc compatibility with this player is limited as follows:

1. Sampling Frequency / only at 44.1 kHz
2. Bit rate / within 32 - 320kbps
3. CD-R physical format should be "ISO 9660"
4. If you record MP3 files using the software which cannot create a FILE SYSTEM, for example "Direct-CD" etc., it is impossible to playback MP3 files. We recommend that you use "Easy-CD Creator", which creates an ISO9660 file system.
5. A single session disc requires MP3 files in the first track. If there is no MP3 file in the 1st track, it cannot play back MP3 files. If you wish to playback MP3 files, format all the data in the disc or use a new one.
6. File names should be named using 8 letters or less and must incorporate ".mp3" extension
   e.g. "********.MP3".
7. Do not use special letters such as "/ : * ? " < > " etc.
8. Total number of files and folders on the disc should be less than 999.

This DVD+VCR requires discs/recordings to meet certain technical standards in order to achieve optimal playback quality. Pre-recorded DVDs are automatically set to these standards. There are many different types of recordable disc formats (including CD-R containing MP3 files). That require certain pre-existing conditions (see above) to insure compatible playback.

Customers should also note that permission must be required in order to download MP3 files and music from the Internet. Our company has no right to grant such permission. Permission should always be sought from the copyright owner.

Pause CD MP3

1 Press PAUSE/STEP (❚❚) during playback.

2 To return to playback, press PLAY or press PAUSE/STEP (❚❚) again.

Moving to another Track CD MP3

- Press BACKWARD (|◀◀) or FORWARD (▶▶|) briefly during playback to go to the next track or to return to the beginning of the current track.
- Press BACKWARD (|◀◀) twice briefly to step back to the previous track.
- To go directly to any track, enter the track number using the numbered buttons (0-9) during playback.

Repeat Track/All/Off CD MP3

1 To repeat the track currently playing, press REPEAT.
The Repeat icon and "TRACK" appears on the menu screen.

2 To repeat all tracks on a disc, press REPEAT a second time.
The Repeat icon and "ALL" appears on the menu screen.

3 To cancel Repeat mode, press REPEAT a third time.

Search CD MP3

1 Press and hold BACKWARD (|◀◀) or FORWARD (▶▶|) for about two seconds during playback.
The player will now go into SEARCH mode.

2 Press and hold BACKWARD (|◀◀) or FORWARD (▶▶|) repeatedly to select the required speed: ◀◀X2, ◀◀X4, ◀◀X8 (backward) or ▶▶X2, ▶▶X4, ▶▶X8 (forward).
Search speed and direction are indicated on the menu screen.

3 To exit SEARCH mode, press PLAY(▷).

Note
The DVD+VCR mutes sound during search mode of MP3 files.

Random CD MP3

1 Press RANDOM during playback or when playback is stopped.
The unit automatically begins Random Playback and "Random" appears on the menu screen.

2 To return to normal playback, press RANDOM repeatedly until "Random" disappears on the menu screen.

Repeat A-B CD

To repeat a sequence:

1 Press A-B at your chosen starting point.
Repeat icon and "A" appears on the menu screen.

2 Press A-B again at your chosen end point.
The Repeat icon and "A - B" appears on the menu screen, and the repeat sequence begins.

3 To exit the sequence and return to normal play, press A-B again.

Programmed Playback with Audio CD and MP3 Discs

The Program function enables you to store your favorite tracks from any disc in the player memory.
Program can contain 99 tracks (Audio CD) or 300 tracks (MP3).

1 Insert an Audio CD or MP3 disc.
Audio CD or MP3 menu will appear.

2 Press ▲▼◄► to select a track on the List.

3 Press PROGRAM. Or, press ▲▼◄► to highlight the "Add" icon then press SELECT/ENTER.
The selected track is added to the program list.

4 Repeat steps 2-3 to place additional tracks on the Program list.

5 Press ▲▼◄► to move to the Program list.

6 Press ▲/▼ to select the track you want to start playing.

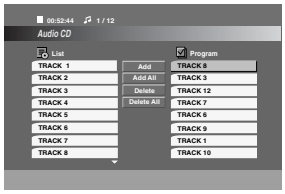

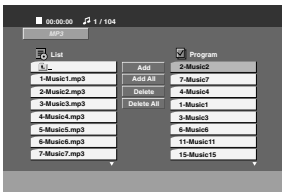

Tips

- Press and hold ▼ to move to the next page.
- Press and hold ▲ to move to the previous page.
- If you are in a file list on the MP3 menu and want to return to the Folder list, use the ▲/▼ to highlight and press SELECT/ENTER.

7 Press PLAY (▷) or SELECT/ENTER to start.
Playback begins in the order in which you programmed the tracks.
Playback stops after all of the tracks on the Program list have played once.

8 To resume normal playback from programmed playback, select a track on the List then press SELECT/ENTER.

Repeat Programmed Tracks

- To repeat the track currently playing, press REPEAT.
  The Repeat icon and "TRACK" appears on the screen.
- To repeat all tracks on the program list, press REPEAT a second time.
  The Repeat icon and "ALL" appears on the screen.
- To cancel Repeat mode, press REPEAT a third time.

Erasing a Track from Program List

1 Select the track that you wish to erase from the Program list.
2 Press ▲▼◄► to highlight the "Delete" icon then press SELECT/ENTER. Or, press CLEAR.
The selected track is deleted on the program list.
3 Repeat steps 1-2 to delete additional tracks on the Program list.

Erasing the Complete Program List

Press ▲▼◄► to highlight the "Delete All" icon then press SELECT/ENTER.
All tracks on the program list are deleted.

Troubleshooting

Check the following guide for the possible cause of a problem before contacting service.

Symptom	Cause	Correction
No power.	• The power cord is disconnected.	• Plug the power cord into the wall outlet securely.
The power is on, but the DVD+VCR does not work.	• No disc is inserted. • No tape is inserted.	• Insert a disc or tape. (Check that the disc or tape indicator in the display window is lit.)
No picture.	• The TV is not set to receive DVD+VCR signal output.	• Select the appropriate video input mode on the TV so the picture from the DVD+VCR appears on the TV screen.
	• TV/VCR mode for DVD+VCR is set to TV.	• Press the TV/VCR button on the remote control repeatedly to choose VCR mode. TV indicator disappears in the display window.
	• The video cable is not connected securely.	• Connect the video cable securely.
	• The connected TV power is turned off.	• Turn on the TV.
No sound.	• The equipment connected with the audio cable is not set to receive DVD+VCR signal output.	• Select the correct input mode of the audio receiver so you can listen to the sound from the DVD+VCR.
	• The audio cables are not connected securely.	• Connect the audio cable securely.
	• The power of the equipment connected with the audio cable is turned off.	• Turn on the equipment connected with the audio cable.
	• The Digital Audio Output is set to the wrong position.	• Set the Digital Audio Output to the correct position, then turn on the DVD+VCR again by pressing POWER.
The playback picture is poor.	• The disc is dirty.	• Clean the disc.
	• Tape heads are dirty.	• Clean video heads.
	• Tape is a rental or was recorded on another VCR.	• Use CH/TRK (▲/▼) for manual tracking adjustment while tape is playing.
The DVD+VCR does not start playback.	• No disc is inserted. • No tape is inserted.	• Insert a disc or tape. (Check that the disc or tape indicator in the display window is lit.)
	• An unplayable disc is inserted.	• Insert a playable disc. (Check the disc type, color system, and Regional code.)
	• The disc is placed upside down.	• Place the disc with the playback side down.
	• The disc is not placed within the guide.	• Place the disc on the disc tray correctly inside the guide.
	• The disc is dirty.	• Clean the disc.
	• The Rating level is set.	• Cancel the Rating function or change the rating level.
The remote control does not work properly.	• The remote control is not pointed at the remote sensor of the DVD+VCR.	• Point the remote control at the remote sensor of the DVD+VCR.
	• The remote control is too far from the DVD+VCR.	• Operate the remote control within 23 ft (7 m).
	• There is an obstacle in the path of the remote control and the DVD+VCR.	• Remove the obstacle.
	• The batteries in the remote control are exhausted.	• Replace the batteries with new ones.
	• This remote control use the same buttons for VCR and DVD functions (ex. PLAY).	• When using a VCR, first press the VCR button. When using a DVD, first press the DVD button.

Troubleshooting (Continued)

Symptom	Cause	Correction
Some channels are skipped over when using CH/TRK (▲/▼)	• Those channels were deleted with the CH. ADD/DEL option.	• Use CH. ADD/DEL. to restore channels. See “Channel Selection” on page 15.
Picture and sound of broadcasting channel are weak or missing.	• Antenna or cables are loose.	• Tighten connections or replace cable.
	• Wrong TUNING BAND option is being used.	• Try all TUNING BAND options. See “Channel Selection” on page 15 for details.
Camcorder image is not shown.	• Camcorder is off.	• Turn camcorder on and operate properly.
Camcorder image via A/V input to DVD+VCR is not shown on TV screen.	• DVD+VCR SOURCE SELECT is not set to LINE1 or LINE2.	• Press INPUT to select LINE input channel (LINE1 or LINE2).
Timer recording is not possible.	• Clock in DVD+VCR is not set to correct time.	• Set clock to correct time. See “Setting the Clock” on page 16.
	• Timer has been programmed incorrectly.	• Reprogram Timer. See “Timer Recording” on pages 23 and 24.
	• ⏲ indicator does not appear after programming timer.	• Reprogram Timer.
⏲ indicator appears after DVD+VCR is turned off.	• DVD+VCR is in Timer Recording mode.	• This is the normal indication that the DVD+VCR is in TIMER mode.
Stereo Audio Record and/or Playback is not present.	• TV is not Stereo-compatible.	• No action is possible.
	• Broadcast program is not in stereo format.	• No action is possible.
	• DVD+VCR A/V Out jacks are not connected to TV A/V In jacks.	• Make A/V connections. Stereo is available only via A/V output from DVD+VCR.
	• DVD+VCR Audio/Video Out is not selected for viewing at the TV.	• Select AUX or A/V source as TV input.
	• DVD+VCR BROADCAST TYPE mode is set to SAP or MONO.	• Set BROADCAST TYPE mode to STEREO. See “Setting the VCR Setup Menu” on page 15.

Moisture Condensation

Moisture condensation can occur:	In locations where moisture condensation may occur:
• When the DVD+VCR is moved from a cold place to a warm place.	• Keep the DVD+VCR plugged into an AC power outlet with POWER On. This will help prevent condensation.
• Under extremely humid conditions.	• When condensation has occurred, wait a few hours for the DVD+VCR to dry before using it.

Language Code List

Enter the appropriate code number for the initial settings “Disc Audio”, “Disc Subtitle” and/or “Disc Menu” (See page 18).

Language	Code	Language	Code	Language	Code	Language	Code
Abkhazian	6566	Fiji	7074	Lingala	7678	Singhalese	8373
Afar	6565	Finnish	7073	Lithuanian	7684	Slovak	8375
Afrikaans	6570	French	7082	Macedonian	7775	Slovenian	8376
Albanian	8381	Frisian	7089	Malagasy	7771	Somali	8379
Amharic	6577	Galician	7176	Malay	7783	Spanish	6983
Arabic	6582	Georgian	7565	Malayalam	7776	Sudanese	8385
Armenian	7289	German	6869	Maltese	7784	Swahili	8387
Assamese	6583	Greek	6976	Maori	7773	Swedish	8386
Aymara	6588	Greenlandic	7576	Marathi	7782	Tagalog	8476
Azerbaijani	6590	Guarani	7178	Moldavian	7779	Tajik	8471
Bashkir	6665	Gujarati	7185	Mongolian	7778	Tamil	8465
Basque	6985	Hausa	7265	Nauru	7865	Tatar	8484
Bengali; Bangla	6678	Hebrew	7387	Nepali	7869	Telugu	8469
Bhutani	6890	Hindi	7273	Norwegian	7879	Thai	8472
Bihari	6672	Hungarian	7285	Oriya	7982	Tibetan	6679
Breton	6682	Icelandic	7383	Panjabi	8065	Tigrinya	8473
Bulgarian	6671	Indonesian	7378	Pashto, Pushto	8083	Tonga	8479
Burmese	7789	Interlingua	7365	Persian	7065	Turkish	8482
Byelorussian	6669	Irish	7165	Polish	8076	Turkmen	8475
Cambodian	7577	Italian	7384	Portuguese	8084	Twi	8487
Catalan	6765	Japanese	7465	Quechua	8185	Ukrainian	8575
Chinese	9072	Javanese	7487	Rhaeto-Romance	8277	Urdu	8582
Corsican	6779	Kannada	7578	Romanian	8279	Uzbek	8590
Croatian	7282	Kashmiri	7583	Russian	8285	Vietnamese	8673
Czech	6783	Kazakh	7575	Samoan	8377	Volapük	8679
Danish	6865	Kirghiz	7589	Sanskrit	8365	Welsh	6789
Dutch	7876	Korean	7579	Scots Gaelic	7168	Wolof	8779
English	6978	Kurdish	7585	Serbian	8382	Xhosa	8872
Esperanto	6979	Laothian	7679	Serbo-Croatian	8372	Yiddish	7473
Estonian	6984	Latin	7665	Shona	8378	Yoruba	8979
Faeroese	7079	Latvian, Lettish	7686	Sindhi	8368	Zulu	9085

Country Code List

Enter the appropriate code number for the initial setting “Country Code” (See page 20).

Country	Code
Afghanistan	AF
Albania	AL
Algeria	DZ
American Samoa	AS
Andorra	AD
Angola	AO
Anguilla	AI
Antarctica	AQ
Antigua and Barbuda	AG
Argentina	AR
Armenia	AM
Aruba	AW
Australia	AU
Austria	AT
Azerbaidjan	AZ
Bahamas	BS
Bahrain	BH
Bangladesh	BD
Barbados	BB
Belarus	BY
Belgium	BE
Belize	BZ
Benin	BJ
Bermuda	BM
Bhutan	BT
Bolivia	BO
Bosnia-Herzegovina	BA
Botswana	BW
Bouvet Island	BV
Brazil	BR
British Indian Ocean Territory	IO
Brunei Darussalam	BN
Bulgaria	BG
Burkina Faso	BF
Burundi	BI
Cambodia	KH
Cameroon	CM
Canada	CA
Cape Verde	CV
Cayman Islands	KY
Central African Republic	CF
Chad	TD
Chile	CL
China	CN
Christmas Island	CX
Cocos (Keeling) Islands	CC
Colombia	CO
Comoros	KM
Congo	CG
Cook Islands	CK
Costa Rica	CR
Croatia	HR
Cuba	CU
Cyprus	CY
Czech Republic	CZ
Denmark	DK
Djibouti	DJ
Dominica	DM
Dominican Republic	DO
East Timor	TP
Ecuador	EC
Egypt	EG

Country	Code
El Salvador	SV
Equatorial Guinea	GQ
Eritrea	ER
Estonia	EE
Ethiopia	ET
Falkland Islands	FK
Faroe Islands	FO
Fiji	FJ
Finland	FI
Former Czechoslovakia	CS
Former USSR	SU
France	FR
France (European Territory)	FX
French Guyana	GF
French Southern Territories	TF
Gabon	GA
Gambia	GM
Georgia	GE
Germany	DE
Ghana	GH
Gibraltar	GI
Great Britain	GB
Greece	GR
Greenland	GL
Grenada	GD
Guadeloupe (French)	GP
Guam (USA)	GU
Guatemala	GT
Guinea	GN
Guinea Bissau	GW
Guyana	GY
Haiti	HT
Heard and McDonald Islands	HM
Honduras	HN
Hong Kong	HK
Hungary	HU
Iceland	IS
India	IN
Indonesia	ID
Iran	IR
Iraq	IQ
Ireland	IE
Israel	IL
Italy	IT
Ivory Coast	CI
Jamaica	JM
Japan	JP
Jordan	JO
Kazakhstan	KZ
Kenya	KE
Kiribati	KI
Kuwait	KW
Kyrgyzstan	KG
Laos	LA
Latvia	LV
Lebanon	LB
Lesotho	LS
Liberia	LR
Libya	LY
Liechtenstein	LI
Lithuania	LT
Luxembourg	LU

Country	Code
Macau	MO
Macedonia	MK
Madagascar	MG
Malawi	MW
Malaysia	MY
Maldives	MV
Mali	ML
Malta	MT
Marshall Islands	MH
Martinique (French)	MQ
Mauritania	MR
Mauritius	MU
Mayotte	YT
Mexico	MX
Micronesia	FM
Moldavia	MD
Monaco	MC
Mongolia	MN
Montserrat	MS
Morocco	MA
Mozambique	MZ
Myanmar	MM
Namibia	NA
Nauru	NR
Nepal	NP
Netherlands	NL
Netherlands Antilles	AN
New Caledonia (French)	NC
New Zealand	NZ
Nicaragua	NI
Niger	NE
Nigeria	NG
Niue	NU
Norfolk Island	NF
North Korea	KP
Northern Mariana Islands	MP
Norway	NO
Oman	OM
Pakistan	PK
Palau	PW
Panama	PA
Papua New Guinea	PG
Paraguay	PY
Peru	PE
Philippines	PH
Pitcairn Island	PN
Poland	PL
Polynesia (French)	PF
Portugal	PT
Puerto Rico	PR
Qatar	QA
Reunion (French)	RE
Romania	RO
Russian Federation	RU
Rwanda	RW
S. Georgia & S. Sandwich Isls.	GS
Saint Helena	SH
Saint Kitts & Nevis Anguilla	KN
Saint Lucia	LC
Saint Pierre and Miquelon	PM
Saint Tome and Principe	ST

Country	Code
Saint Vincent & Grenadines	VC
Samoa	WS
San Marino	SM
Saudi Arabia	SA
Senegal	SN
Seychelles	SC
Sierra Leone	SL
Singapore	SG
Slovak Republic	SK
Slovenia	SI
Solomon Islands	SB
Somalia	SO
South Africa	ZA
South Korea	KR
Spain	ES
Sri Lanka	LK
Sudan	SD
Suriname	SR
Svalbard and Jan Mayen Islands	SJ
Swaziland	SZ
Sweden	SE
Switzerland	CH
Syria	SY
Tadjikistan	TJ
Taiwan	TW
Tanzania	TZ
Thailand	TH
Togo	TG
Tokelau	TK
Tonga	TO
Trinidad and Tobago	TT
Tunisia	TN
Turkey	TR
Turkmenistan	TM
Turks and Caicos Islands	TC
Tuvalu	TV
Uganda	UG
Ukraine	UA
United Arab Emirates	AE
United Kingdom	UK
United States	US
Uruguay	UY
USA Minor Outlying Islands	UM
Uzbekistan	UZ
Vanuatu	VU
Vatican City State	VA
Venezuela	VE
Vietnam	VN
Virgin Islands (British)	VG
Virgin Islands (USA)	VI
Wallis and Futuna Islands	WF
Western Sahara	EH
Yemen	YE
Yugoslavia	YU
Zaire	ZR
Zambia	ZM
Zimbabwe	ZW

Specifications

General

Power requirements	AC 120V , 60 Hz
Power consumption	23W
Dimensions (approx.)	430 X 97.5 X 293 mm (16.9 x 3.9 x 11.5 inches) (w x h x d)
Mass (approx.)	4.8 kg (10.58 lbs)
Operating temperature	5˚C to 40˚C (41˚F to 104˚F)
Operating humidity	5 % to 90 %
Signal system	NTSC

Inputs

ANTENNA IN	Antenna or CATV input, 75 ohms
VHS VIDEO IN	1 Vp-p 75 ohms, sync negative, RCA jack x 2
VHS AUDIO IN	-6.0 dBm more than 47 kohms, RCA jack (L, R) x 2

Outputs

VIDEO OUT	1 Vp-p 75 ohms, sync negative
S-VIDEO OUT	(Y) 1.0 V (p-p), 75 ohms, negative sync, Mini DIN 4-pin x 1 (C) 0.3 V (p-p) 75 ohms
COMPONENT VIDEO OUT	(Y) 1.0 V (p-p), 75 ohms, negative sync, RCA jack x 1 (Pb)/(Pr) 0.7 V (p-p), 75 ohms, RCA jack x 2
Audio output (digital audio)	0.5 V (p-p), 75 ohms, RCA jack x 1
Audio output (analog audio)	2.0 Vrms (1 KHz, 0 dB), 600 ohms, RCA jack (L, R) x 1
RF OUT	Channel 3 or 4

VCR Specifications

Head system	Four head helical scan azimuth system
Timer	12-hour display type with AM, PM
Tape speed	SP: 33.35 mm/sec, LP: 16.67 mm/sec, SLP: 11.12 mm/sec
Tape width	12.7 mm
Maximum recording time	SP: 2 HOURS (T-120), SLP: 6 HOURS (T-120)/8 HOURS (T-160)
Rewind time	About 3 minutes (T-120)
Antenna	75 ohms (VHF/UHF)
VHF output signal	Channel 3 or 4 (Switchable)
Channel coverage	VHF: 2-13, UHF: 14-69, CATV: 1-125 (4A, A-W, W+1 - W+84, A-5 - A-1)
Frequency range	20Hz to 20kHz
Signal-to-noise ratio	More than 43dB
Dynamic range	More than 88 dB
Channel separation	More than 60 dB

DVD Specifications

Laser system	Semiconductor laser, wavelength 650 nm
Frequency response	DVD (PCM 96 kHz): 8 Hz to 44 kHz, DVD (PCM 48 kHz): 8 Hz to 22 kHz CD: 8 Hz to 20 kHz
Signal-to-noise ratio	More than 100dB (ANALOG OUT jacks only)
Harmonic distortion	Less than 0.008%
Dynamic range	More than 95 dB (CD), More than 100 dB (DVD)

Accessory:

Video cable x 1, Audio cable(L/R) x 1, RF 75-ohm Coaxial Cable x 1, Remote control x 1, Batteries x 2

- Design and specifications are subject to change without notice.

For assistance in obtaining repairs and operational or technical information, please contact the following Toll Free Number:

DIAL TOLL FREE: 1-800-813-3435

Weekdays 7:30AM ~ 4:00PM Central Time

Also, you may write to SANYO Manufacturing Corporation, 3333 Sanyo Road Forrest City Arkansas 72335

LIMITED WARRANTY

LABOR 90 DAYS **PARTS 1 YEAR** **CARRY-IN ONLY**

THIS WARRANTY IS VALID ONLY ON SANYO PRODUCTS PURCHASED FROM A WAL-MART STORE AND USED IN THE UNITED STATES OF AMERICA, EXCLUDING HAWAII AND ALL U.S. TERRITORIES AND PROTECTORATES. THIS WARRANTY APPLIES ONLY TO THE ORIGINAL RETAIL PURCHASER AND DOES NOT APPLY TO PRODUCTS USED FOR ANY INDUSTRIAL, PROFESSIONAL OR COMMERCIAL PURPOSE.

Subject to the OBLIGATIONS and EXCLUSIONS below, SANYO Manufacturing Corporation ("SANYO") warrants this SANYO product against defects in materials and workmanship for the periods of LABOR and PARTS specified above. SANYO will repair or replace (at its option) the product and any of its parts which fail to conform to this warranty with new or refurbished products or parts. The warranty period commences on the date the product was first purchased at retail from a Wal-Mart Store.

OBLIGATIONS

In order to obtain warranty service, the product must be delivered to and picked up from a Wal-Mart Store at the original retail purchaser's expense. The original dated bill of sale, or sales slip from a Wal-Mart Store must be submitted to a Wal-Mart Store at the time warranty service is requested.

EXCLUSIONS

1. This warranty does not cover (A) the adjustment of customer-operated controls as explained in the appropriate model's instruction manual, or (B) the repair of any product whose serial number has been altered, defaced or removed.
2. This warranty shall not apply to the cabinet or cosmetic parts, broken or damaged video heads, batteries or routine maintenance.
3. This warranty does not apply to uncrating, setup, installation, removal of the product for repair or reinstallation of the product after repair.
4. This warranty does not apply to repairs or replacements necessitated by any cause beyond the control of SANYO including, but not limited to, any malfunction, defect or failure caused by or resulting from unauthorized service or parts, improper maintenance, operation contrary to furnished instructions, shipping or transit accidents, modification or repair by user or any third party, abuse, misuse, neglect, accident, incorrect line voltage, fire, flood or other Acts of God, or normal wear and tear.

The foregoing is in lieu of all other express warranties and SANYO does not assume or authorize any party to assume for it any other obligation or liability.

THE DURATION OF ANY WARRANTIES WHICH MAY BE IMPLIED BY LAW (INCLUDING THE WARRANTIES OF MERCHANTABILITY AND FITNESS) IS LIMITED TO THE TERM OF THIS WARRANTY. IN NO EVENT SHALL SANYO OR THE MANUFACTURER OF THE PRODUCT BE LIABLE FOR SPECIAL, INCIDENTAL OR CONSEQUENTIAL DAMAGES ARISING FROM OWNERSHIP OR USE OF THIS PRODUCT, OR FOR ANY DELAY IN THE PERFORMANCE OF ITS OBLIGATIONS UNDER THIS WARRANTY DUE TO CAUSES BEYOND ITS CONTROL.

SOME STATES DO NOT ALLOW LIMITATIONS ON HOW LONG AN IMPLIED WARRANTY LASTS AND/OR DO NOT ALLOW THE EXCLUSION OR LIMITATION OF CONSEQUENTIAL DAMAGES, SO THE ABOVE LIMITATIONS AND EXCLUSIONS MAY NOT APPLY TO YOU.

THIS WARRANTY GIVES YOU SPECIAL LEGAL RIGHTS. YOU MAY HAVE OTHER RIGHTS, WHICH VARY FROM STATE TO STATE.

For your protection in the event of theft or loss of this product, please keep the following information with a sales receipt in a safe place.

Model No. _____ **Serial No.** _____

Date of Purchase _____ **Purchase Price** _____

Where Purchased _____

SANYO

SANYO Manufacturing Corporation