LG Innotek Co., Ltd.

DOCUMENT NO : 제승 05(개A)EB-026
DATE : 2005.02.23
TO(CUSTOMER) : LG DAV
SUBJECT : 제품승인원 송부

We would like to request you to recognize above proposal.
Please send back 2 copy with your approval sign for us
after your examination and complete check,
Since we submit following information herewith.

CUST.MODEL NO : 6700NFNL08A
LGIT MODEL NO : TADS-H102F

1. RECORD OF REVISION
2. SPECIFICATION
3. CIRCUIT DIAGRAM
4. ASSEMBLY DRAWING
5. INSULATION MATERIAL PARTS LIST

YOUR VERY FAITHFULLY
TUNER DEVELOPMENT OF
HIGH FREQUENCY COMPONENTS
DIVISION

CUSTOM APPROVAL SECTION

APPD	2005.02.23 Y.S RO
CHKD	2005.02.23 H.R Lee
DSGD	2005.02.23 H.D KIM

RECORD OF REVISION

NO	DATE	TITLE	CONTENTS	LETTER NO	NOTE
1	2005.02.23	NEW APPROVAL SHEET	A NEW	제승05(개A)EB-026	

SYMB	NO	APPD	CHKD	DSGD	LG Innotek Co., Ltd.			
					A P P D.	C H K D.	D S G D.	MODEL NO: TADS-H102F
					2005.02.23 Y.S RO	2005.02.23 H.R LEE	2005.02.23 H.D KIM	TITLE: SPECIFICATION
								DOCUMENT NO: BR 40643 (1/1)

S P E C I F I C A T I O N

LG Innotek Co., Ltd.

A P P D.	C H K D.	D S G D.	MODEL NO	T A D S - H 1 0 2 F
2005.02.23 Y. S. Ro	2005.02.23 H.R. Lee	2005.02.23 H.D KIM	DOCUMENT NO	B C 4 0 5 7 8

S P E C I F I C A T I O N

I n d e x

Item no	Item	Page
1	Common	3p
1- 1	Application	3p
1- 2	Structure	3p
1- 3	Circuit	3p
2	General specifications	3p
2- 1	Applicable broadcasting system	3p
2- 2	Receiving system	3p
2- 3	Intermediate frequency	3p
2- 4	Receiving channel	3p
2- 5	Output channel of modulator	3p - 4p
2- 6	Input / output condition	4p
2- 7	Operating temperature range	4p
2- 8	Storage temperature range	4p
2- 9	Guarantee voltage for operation	4p
2-10	Maximum ratings	5p
2-11	Current consumption	5p
2-12	PLL data format	5p - 7p
2-13	Test condition	7p
2-14	Measuring instruments	8p

SYMB	NO	APPD	CHKD	DSGD	A P P D.	C H K D.	D S G D.	MODEL NO: TADS-H102F
								TITLE: SPECIFICATION
								DOCUMENT NO: BC 40578(1/23)

3	Electrical characteristics	9p
3- 1	RF-modulator section	9p - 12p
3- 2	ANT SW section	13p - 14p
3- 3	Tuner section	15p - 17p
3- 4	IF section	17p - 19p
4	Environmental tests	20p
4 -1	Heat load test	20p
4- 2	Humidity load test	20p
4- 3	Cold test	20p
4- 4	Operating life test	20p
4- 5	High voltage test	20p
4- 6	Vibration test	20p
4- 7	Impact test	20p
5	Mechanical characteristics	21p
5- 1	Outline view assembly appearance	21p
5- 2	Appearance structure	22p
6	Others	22p
6- 1	Ant jack load test	22p
7	The Certificate of LAED-Free Part	22p
7- 1	Information	22p
7- 2	LEAD Free Schedule	22p
7- 3	LEAD Free Marking	22p
8	Test circuit	23p

					A P P D.	C H K D.	D S G D.	MODEL NO: TADS-H102F
								TITLE: SPECIFICATION
								DOCUMENT NO: BC 40578(2/23)
SYMB	NO	APPD	CHKD	DSGD				

1. Common

1- 1. Application

This specification applies to TMI type (RF Front-End system) for TV, VCR, DVD

1- 2. Structure

Refer to the attached assembly drawing.

1- 3. Circuit

Refer to the attached circuit diagram.

2. General specifications.

2- 1. Applicable broadcasting system

NTSC M / US CH

2- 2. Receiving system

Upper Heterodyne

2- 3. Intermediate frequency

Picture intermediate frequency : 45.75 MHz
Sound intermediate frequency : 41.25 MHz

2- 4. Receiving channel

VHF LOW : 2 ~ B Ch
VHF HIGH : C ~ W+11 Ch
UHF : W+12 ~ 69 Ch

2- 5. Output channel of modulator

US 3 / 4 Ch

					A P P D.	C H K D.	D S G D.	MODEL NO: TADS-H102F
								TITLE: SPECIFICATION
								DOCUMENT NO: BC 40578(3/23)
SYMB	NO	APPD	CHKD	DSGD				

	Terminal NO. 2
3 Ch	OPEN
4 Ch	GND

2- 6. Input / Output condition

ANT nominal impedance
ANT IN : 75Ω unbalance
ANT OUT : 75Ω unbalance
Video in impedance : 0.7kΩ ~ 1.3kΩ (typ. 1kΩ)
Audio in impedance : 10kΩ min.
Control impedance : 1kΩ min. (typ. 10kΩ)
Video out load : 10kΩ
Audio out load : 100kΩ

2- 7. Operating temperature range

Temperature: -10°C ~ +60°C
(Normally Air Temperature)
Humidity : less than 65%RH

2- 8. Storage temperature range

Temperature : -10°C ~ +70°C
(Normally Air Temperature)
Humidity : less than 70%RH

2-9. Guarantee voltage for operation

Terminal		Supply voltage			
		min.	typ.	max.	unit
+B		4.8	5.0	5.2	Vdc
TU		29.0	32.0	34.0	
CONTROL	VCR Mode	4.8	5.0	5.2	
	TV Mode	-	-	0.5	

					A P P D.	C H K D.	D S G D.	MODEL NO: TADS-H102F
								TITLE: SPECIFICATION
								DOCUMENT NO: BC 40578(4/23)
SYMB	NO	APPD	CHKD	DSGD				

2-10. Maximum ratings

Terminal	Supply voltage	Unit
+B	6.0	Vdc
TU	35.0	
CONTROL(MD:ON)	6.0	

(Note) Within "+B" supply voltage at SCL,SDA,terminal.

2-11. Current consumption

Terminal	Current consumption			
	min.	typ.	max.	unit
+B	-	170	200	mA
TU	-	1.5	5.0	
CONTROL(MD:ON)	-	47.0	173	μA

2-12. PLL characteristics of tuner section

2-12-1. I2C Write data format

	MSB							LSB	
Address byte	1	1	0	0	0	MA1	MA0	R/W=0	A
Divider byte 1	0	N14	N13	N12	N11	N10	N9	N8	A
Divider byte 2	N7	N6	N5	N4	N3	N2	N1	N0	A
Control byte	1	CP	T2	T1	T0	RSA	RSB	OS	A
BAND SW byte	X	X	X	X	BS4	BS3	BS2	BS1	A

MA1,MA2 Programmable address bits(see address selection table)
N14...N0 Programmable divider bits
$N = N14 \times 2^{14} + N13 \times 2^{13} + --- + N1 \times 2^{1} + N0$
CP Charge pump current set bit
60uA(CP=0) 280uA(CP=1)
T2,T1,T0 Test bits
Normal operation : T2=0,T1=1,T0=1
RSA,RSB Reference divider select bits(see ratio select bits table)
OS Tuning Amp. control bit
Tuning Voltage ON(OS=0)
Tuning Voltage OFF , High impedance(OS=1)
BS4...BS1 NPN band switch buffers control bits
BSn=0:OFF BSn=1:ON
X Don't care

					A P P D.	C H K D.	D S G D.	MODEL NO: TADS-H102F
								TITLE: SPECIFICATION
SYMB	NO	APPD	CHKD	DSGD				DOCUMENT NO: BC 40578(5/23)

- Address Selection(I2C bus)

Voltage applied on AS input	MA1	MA0
0V to 0.1X+BC	0	0
Open or 0.2VX+B to 0.3X+B	0	1
0.4X+B to 0.6X+B	1	0
0.9X+B to +B	1	1

- Ratio select Bits

RSA	RSB	Reference divider
X	0	640
0	1	1024
1	1	512

2-12-2. I2C Read Data Format

	MSB							LSB	
Address byte(ADB)	1	1	0	0	0	MA1	MA0	R/W=1	A
Status byte(SB)	POR	FL	1	1	1	A2	A1	A0	A

A : Acknowledge

MA1,MA0 Programmable address bits(see address selection table)
POR Power On Reset Flag(Default=1)
POR set : Power ON
POR reset :End-of-Data transmission procedure
FL In-lock Flag
PLL lock(FL=1),PLL unlock(FL=0)
A2...A0 ADC digital data

2-12-3. Input Signal Level (SCL, SDA)

INPUT Signal level	MIN	MAX	Unit
High level	3.0	5.5	V
Low level	-	1.5	

					A P P D.	C H K D.	D S G D.	MODEL NO: TADS-H102F
								TITLE: SPECIFICATION
SYMB	NO	APPD	CHKD	DSGD				DOCUMENT NO: BC 40578(6/23)

2-12-4 I²C BUS Time

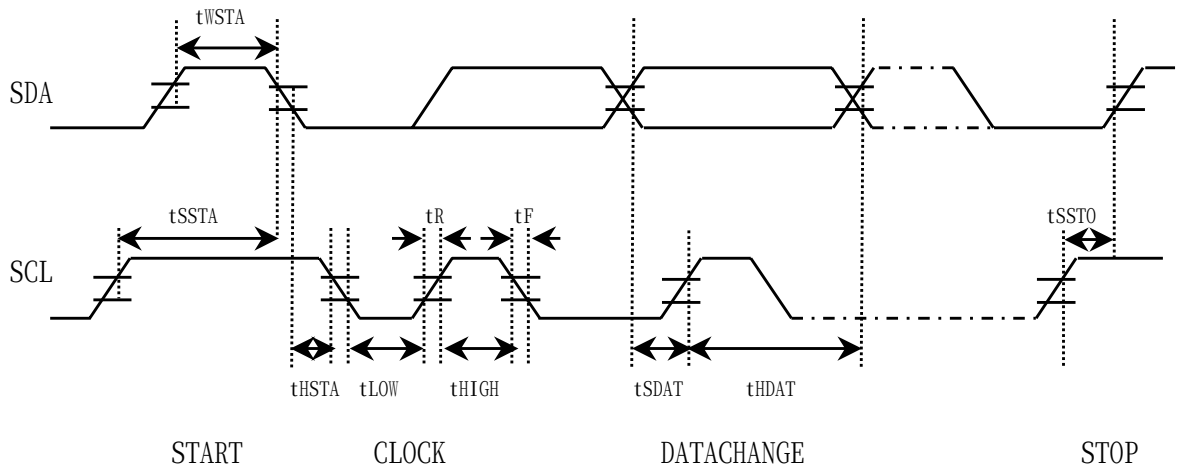

		MIN	TYP	MAX	단 위
fSCL	SCL clock frequency	0		400	kHz
tWSTA	Start waiting time	1300			nsec
tHSTA	Start hold time	600			〃
tLOW	Low clock pulse width	1300			〃
tHIGH	High clock pulse width	600			〃
tSSTA	Start set-up time	600			〃
tHDAT	Data hold time	1300			〃
tSDAT	Data set-up time	600			〃
tR	Rise time			300	〃
tF	Fall time			300	〃
tSSTO	Stop set-up time	600			〃

2-13. Test condition

Terminal	Supply voltage	Unit	Remarks
+B	5 ± 0.1	Vdc	Ripple:10mVp-p max.
TU	32 ± 2	Vdc	
CONTROL	5 ± 0.1	Vdc	
Ambient temperature	25 ± 5	℃	
Relative humidity	65 ± 10	%RH	

					A P P D.	C H K D.	D S G D.	MODEL NO: TADS-H102F
								TITLE: SPECIFICATION
								DOCUMENT NO: BC 40578(7/23)
SYMB	NO	APPD	CHKD	DSGD				

2-14. Measuring instruments

2-14-1. RF-modulator section

Audio analyzer	: 8903B	HP
Television demodulator	: 5126A	NIHON TSUSHINKI
Spectrum analyzer	: 8568B	HP
Network analyzer	: 8753C	HP
TV pattern generator	: TSG120	TEKTRONIX
	3900N	NIHON TSUSHINKI
Video Measurement	: VM700A	TEKTRONIX

2-14-2. IF section

TV pattern generator	: TG-7/1	SHIBASOKU
	TG2000	TEKTRONIX
IF modulator	: RM54A	SHIBASOKU
	146F	EIDEN
RF converter	: RC51B	SHIBASOKU
	458C-X	EIDEN
Video Measurement	: VM700A	TEKTRONIX
Audio Analyzer	: 8903B	HP
	AM51A	SHIBASOKU

3. Electrical characteristics

The unit stated in dBμV is defined the value at 75Ω terminal in this specification. (0 dBm = 109 dBμV)

3- 1. RF-modulator section

Item	Specification				Note
	min.	typ.	max.	unit	
3-1- 1. Video modulation	74	80	86	%	Input signal : 1.0Vp-p white Measure at the output of the standard demodulator.
3-1- 2. Video limit modulation	87	93	99	%	Input signal : 1.5Vp-p stair-steps or ramp. Measure at the output of the standard demodulator.
3-1- 3. V/S ratio	10:3.8	10:4.0	10:4.1	-	Input signal :1.0Vp-p white V : S = 10 : 4 Measure at the output of the standard demodulator.
3-1- 4. Video amplitude frequency characteristics	-3.0	-0.5	+3.0	dB	Measure range : 0.1MHz ~ 4.2MHz Based on 1MHz
3-1- 5. Differential Gain (DG)	-	2	7	%	Input signal : FCC Composite Chrominance : 20 IRE Luminance : 0 ~ 90 %
3-1- 6. Differential Phase (DP)	-	2	7	deg	Input signal : FCC Composite Chrominance : 20 IRE Luminance : 0 ~ 90 %
3-1- 7. Video S/N	45	47	-	dB	Measurement conditions. Measure at the out of the Standard demodulator. (5126A - NIHON TSUSHINKI) and Video Measurement (VM700A - TEKTRONIX) HPF : 100kHz, LPF : 4.2MHz SC TRAP : ON, WEIGHT : ON Input signals : Video : 100% white signal Audio : none Video band : 0.1MHz ~ 4.2MHz

					A P P D.	C H K D.	D S G D.	MODEL NO: TADS-H102F
								TITLE: SPECIFICATION
								DOCUMENT NO: BC 40578(9/23)
SYMB	NO	APPD	CHKD	DSGD				

Item	Specification				Note
	min.	typ.	max.	unit	
3-1- 8. Chroma beat (920kHz P.C.S. beat)	55	65	-	dB	Input signal : 0.4Vp-p 3.58MHz sine wave Use spectrum analyzer to measure the level of Fp + 0.92MHz The value is relative to the level of Fp without video modulation.
3-1- 9. Audio modulation (deviation)	32 (64)	40 (80)	48 (96)	kHz dev (%)	Input signal : 1.04Vp-p 1kHz sine wave (100 % modulation = ± 25kHz dev.)
3-1-10. Audio maximum modulation	150 (300)	220 (440)	-	kHz dev (%)	Input signal : 1kHz sine wave The input should be adjusted to the level just before the saturation of the modulation.
3-1-11. Audio amplitude frequency characteristics	-3	+0.2 -0.6	+3	dB	Input signal : 1.04Vp-p Measure range : 100Hz ~ 10kHz Based on 1kHz
3-1-12. Audio distortion	-	0.5	2.0	%	Input signals : Audio : 1.04Vp-p, 1kHz sine wave Video : 1Vp-p color bar De-emphasis is on.(75μsec)
3-1-13. Audio S/N	45	48	-	dB	Input signals : Audio : 1.04Vp-p, 1kHz sine wave Video : All black (sync. only) Use standard demodulator of inter-carrier system. De-emphasis is on. (75μsec)

					APPD.	CHKD.	DSGD.	MODEL NO: TADS-H102F
								TITLE: SPECIFICATION
								DOCUMENT NO: BC 40578(10/23)
SYMB	NO	APPD	CHKD	DSGD				

Item	Specification				Note
	min.	typ.	max.	unit	
3-1-14. Audio buzz	45	48	-	dB	Video input signal : 1Vp-p color bar Other conditions : same as item 3-1-13.
3-1-15. Video carrier output level	63	66.0	69	dBμV	Video input signal : 1Vp-p 100% white signal.
3-1-16. P/S ratio (sound carrier level)	-12.5	-14.5	-17	dB	Audio input signal : none Other conditions : same as item 3-1-15.
3-1-17. Video carrier frequency	-150	-	+150	kHz	Video input signal : none
3-1-18. Sound carrier frequency	4493	4500	4507	kHz	Audio input signal : none The measurements are taken after 1 min. from the power on.
3-1-19. Out-band spurious	-	-	39.5	dBμV	Video input signal : 1Vp-p color bar Measure range : 0 ~ 1GHz Except the range from Fp-4.6MHz to Fp+7.4MHz.
3-1-20. In-band spurious	60	-	-	dB	Input signals : Video : none Audio : none Measure range : Fp~Fp+4.5MHz.
3-1-21. Terminal leakage	-	-	54	dBμV	Measure range : 0 ~ 1GHz except GND.

					A P P D.	C H K D.	D S G D.	MODEL NO: TADS-H102F
								TITLE: SPECIFICATION
								DOCUMENT NO: BC 40578(11/23)
SYMB	NO	APPD	CHKD	DSGD				

3-1-22. Stability

3-1-22-1. Video carrier frequency rise up time.
The time to approach the set value ±50㎑ : within 3 seconds

3-1-22-2. Audio carrier frequency rise up time.
The time to approach the set value ±5㎑ : within 10 seconds

3-1-22-3. Video carrier frequency shift by supply voltage drift.
Within ±10㎑ by ±0.3V shift of the supply voltage.

3-1-22-4. Audio carrier frequency shift by supply voltage drift.
Within ±2㎑ by ±0.3V shift of the supply voltage.

3-1-23. Thermal Stability

3-1-23-1. Thermal stability of video modulation.
Within ±8% based on the temperature of 25°C.

※ Unless otherwise specified, thermal stability tests shell be performed under the following conditions.

Measurement temperature range : -10°C ~ 60°C

Humidity range : 45%RH ~85%RH

Test measurement order and time :
25°C → -10°C(2H) → 10°C(1H) → 25°C(1H) → 45°C(1H) → 60°C(2H)

3-1-23-2. Thermal stability of video carrier frequency.
Within ±150㎑ based on the temperature of 25°C.

3-1-23-3. Thermal stability of video carrier output level.
Within ±4dB based on the temperature of 25°C.

3-1-23-4. Thermal stability of audio modulation.
Within ±16% on the temperature of 25°C.

3-1-23-5. Thermal stability of audio carrier frequency.
Within ±20kHz on the temperature of 25°C.

3-1-23-6. Thermal stability of P/S ratio
Within ±3.0 dB based on the temperature of 25°C, but the P/S ratio itself should not be less than 13 dB.

3- 2. ANT SW section

Unless otherwise specified, measurement range shall be 54MHz ~ 810MHz, and unused RF terminals shall be terminated by rated impedance Terminator.

Item	Specification				Note
	min.	typ.	max.	unit	
3-2-1. Insertion loss	-	5	6	dB	ANT IN to ANT OUT mode : TV (at MD OFF)
3-2-2. VSWR Ⅰ	-	5.5	7		ANT IN Terminal mode : TV (at MD OFF) 54MHz ~ 810MHz
3-2-3. VSWR Ⅱ	- -	2 2	4 3		ANT OUT terminal mode : TV (at MD OFF) 54MHz ~ 810MHz mode : VCR (at MD ON) 61MHz ~ 72MHz
3-2-4. Isolation	60	65	-	dB	Isolation from ANT OUT to ANT IN mode : VCR (at MD ON) 61MHz ~ 72MHz
3-2-5. ANT IN leakage - MD - TU OSC	 - -	 - -	 9.5 52	 dBμV dBμV	mode : VCR (at MD ON) RF-modulator section : none input signal Tuner OSC leakage.
3-2-6. 2nd Harmonics inter modulation	55	64	-	dB	f1/(f1+f2) ratio mode : TV (at MD OFF) item / freq(MHz) / level(dB)μV f1 / 91.25 / 100 f2 / 103.25 / 100 Both f1 and f2 are not modulated.

					A P P D.	C H K D.	D S G D.	MODEL NO: TADS-H102F
								TITLE: SPECIFICATION
								DOCUMENT NO: BC 40578(13/23)
SYMB	NO	APPD	CHKD	DSGD				

Item	Specification				Note
	min.	typ.	max.	unit	
3-2-7. Cross modulation	55	62	-	dB	Then take the smallest ratio from the sideband to f2 as cross modulation value. item / freq(MHz) / level(dB)μV f1 / 91.25 / 105 f2 / 193.25 / 80 f1 is 40% AM modulated by 15.75KHz sine wave. f2 is not modulated.

					A P P D.	C H K D.	D S G D.	MODEL NO: TADS-H102F
								TITLE: SPECIFICATION
								DOCUMENT NO: BC 40578(14/23)
SYMB	NO	APPD	CHKD	DSGD				

3- 3. Tuner section

When the test characteristics, test point is IF output terminal.

Item			Specification min.	typ.	max.	unit	Note	
3-3-1. IF Rejection								
	UHF		60	80	-	dB	ANT INPUT level 65dBμV	75Ω terminated
	VHF	HIGH	60	80	-			
		LOW	45	60	-			
	UHF		40	60	-	dB	ANT INPUT level 95dBμV	
	VHF	HIGH	40	65	-			
		LOW	40	60	-			
3-3-2. Image Rejection								
	UHF		45	60	-	dB	ANT INPUT level 65dBμV	75Ω terminated
	VHF	CATV	45	70	-			
		13 ~ 7	60	75	-			
		6 ~ 2	60	75	-			
	UHF		40	55	-	dB	ANT INPUT level 95dBμV	
	VHF	CATV	40	60	-			
		13 ~ 7	40	60	-			
		6 ~ 2	40	60	-			
3-3-3. 920㎑ Color Beat Rejection							ANT INPUT level p:60dBμV (75Ω terminated) c:44dBμV (75Ω terminated) s:54dBμV (75Ω terminated)	
	UHF		50	80	-	dB		
	VHF		50	80	-			

SYMB	NO	APPD	CHKD	DSGD	A P P D.	C H K D.	D S G D.	MODEL NO: TADS-H102F
								TITLE: SPECIFICATION
								DOCUMENT NO: BC 40578(15/23)

Item	Specification				Note
	min.	typ.	max.	unit	
3-3-4. CH 6 beat	45	60	-	dB	ANT INPUT level desire : 60dBμV (75Ω terminated) undesire : 54dBμV (75Ω terminated)
3-3-5. CH A-5 beat	45	60	-	dB	ANT INPUT level desire : 60dBμV (75Ω terminated)
3-3-6. CB rejection.	0.535 MHz ~ 30 MHz -7dBm min				desire : 55.25MHz ~ 83.25MHz (Ch.2 ~ Ch.6) -66dBm

3-3-7. 1% Cross modulation

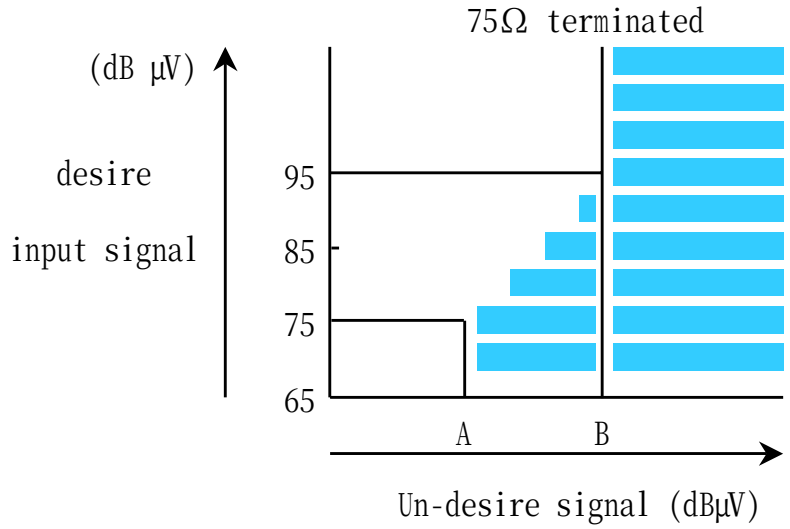

CH		A(dBμV)	B(dBμV)
UHF		64	84
VHF	W+11 ~ J	64	84
	13 ~ 2	64	84

Cross modulation value should be within hantched area.
※ Tuner should be measured for 1% cross modulation with ±2 channel undesired signal.

3-3-8. +B shift

CH	min.	typ.	max.	unit.	note
UHF	-	-	250	kHz	+B±10% PLL "ON"
VHF	-	-	250		

					A P P D.	C H K D.	D S G D.	MODEL NO: TADS-H102F
								TITLE: SPECIFICATION
SYMB	NO	APPD	CHKD	DSGD				DOCUMENT NO: BC 40578(16/23)

3-3-9. Over range	CH	Vtu	min.	typ.	max.	unit.
	UHF	28.0 V	2.0	-	-	MHz
		0.5 V	2.0	-	-	
	VHF	28.0 V	2.0	-	-	
		0.5 V	2.0	-	-	

3-3-10. Noise Figure	CH	min.	typ.	max.	unit.	note
	UHF	-	9.0	14.0	dB	
	VHF HIGH	-	8.0	14.0		
	VHF LOW	-	8.0	14.0		
3-3-11. Power gain deviation	UHF	-	6	12	dB	
	VHF HIGH	-	6	12		
	VHF LOW	-	6	12		
3-3-12. Temperature shift	W+12 ~ 69	-	-	3000	kHz	25°C±25°C
	W+11 ~ J	-	-	3000		
	13 ~ 2	-	-	2000		

3-4. IF section

When the test electrical characteristics when there are no instruction.
fp input level is 70 dBμV and p/s ratio is -7 dB.

Item		Specification min.	typ.	max.	unit	Note
3-4-1. Video S/N	VHF	45	47	-	dB	A figure in parentheses is spec by LGIT measurement system
	UHF	45	47	-		50% white signal. 87.5% modulation. Sub-carrier trap : on HPF : 100 kHz, LPF : 4.2 MHz

					A P P D.	C H K D.	D S G D.	MODEL NO: TADS-H102F
								TITLE: SPECIFICATION
								DOCUMENT NO: BC 40578(17/23)
SYMB	NO	APPD	CHKD	DSGD				

Item	Specification				Note
	min.	typ.	max.	unit	
3-4-2. Noise limiting sensitivity					A figure in parentheses is spec by LGIT measurement System
AIR		45	48	dBμV	
CATV		45	52		50% white signal. 87.5% modulation. Sub-carrier trap : on HPF : 100kHz, LPF : 4.2MHz Video S/N=30dB
UHF		45	52		
3-4-3. Video output level	0.8	1.0	1.2	Vp-p	Standard color bar:87.5% mod.
3-4-4. SYNC ratio	25	28.6	30	%	Standard color bar:87.5% mod.
Burst ratio	17	25	37		
3-4-5. Video amplitude frequency characteristics					
1.0 MHz	-3	-1	+2	dB	Multi-burst : 87.5% mod. based on 0.5 MHz
2.0 MHz	-3	-1	+2		
3.0 MHz	-4	-1	+2		
3.58MHz	-6	-2	+2		
3-4-6. Sin²2T pulse response	70	90	-	%	Sin²2T pulse & bar:87.5% mod.
3-4-7. Differential Gain	-	5	10	%	5 stair-steps : 87.5% mod. Set modulation at the peak of 5'th chroma signal
3-4-8. Differential Phase	-	5	10	deg	5 stair-steps : 87.5% mod. Set modulation at the peak of 5'th chroma signal
3-4-9. Y/C delay time [US 13 CH.]	-100	0	+100	nsec	Sin²2T pulse & bar:87.5% mod.

					A P P D.	C H K D.	D S G D.	MODEL NO: TADS-H102F
								TITLE: SPECIFICATION
								DOCUMENT NO: BC 40578(18/23)
SYMB	NO	APPD	CHKD	DSGD				

Item	Specification				Note
	min.	typ.	max.	unit	
3-4-10. Audio output level	-7.7	-4.2	-1.2	dBm	1kHz /±25kHz dev. standard color bar:87.5% mod.
3-4-11. Audio distortion	-	1	2	%	1kHz /±25kHz dev. standard color bar:87.5% mod.
3-4-12. Audio frequency characteristics 50 Hz 10 kHz	 -3 -3	 0 0	 +3 +3	dB	20Hz ~ 12kHz Based on 1kHz /±7.5kHz dev. standard color bar:87.5% mod. PRE-EMP (75usec) : "ON"
3-4-13. Audio S/N	45	50	-	dB	1kHz /±25kHz dev. standard color bar:87.5% mod. Use IHF filter.(A-Weight Filter)
3-4-14. SYNC buzz	-	50	100	mVp-p	standard color bar:87.5% mod. 400Hz/±25kHz dev. P/S=-17dB
3-4-15. AFT alignment accuracy [US 11 Ch.]	1.5	2.5	3.5	Vdc	Alignment center : 2.5V IF input level : 90dB µV P/S=-7dB standard color bar:87.5% mod. (25°C±10°C & 0 ~ 45% Hum)
3-4-16. SIF Output Level	70	85		dBµV	Video mod. : Color Bar 87.5% mod. RF INPUT Level = 70 dBµV P/S = -6dB Measure peak of 4.5MHz carrier Level using Spectrum Analyzer and 1:10 Probe.

					A P P D.	C H K D.	D S G D.	MODEL NO: TADS-H102F
								TITLE: SPECIFICATION
SYMB	NO	APPD	CHKD	DSGD				DOCUMENT NO: BC 40578(19/23)

4. ENVIRONMENTAL TESTS
(規格値는 初期値에 대하여 變化 範圍를 表示한다)

Item	Specification			Note
	TUNER	MODULATOR	IF	
4-1. Heat load teat	OSC frequency (PLL : ON) UHF : ±100㎑ VHF : ±100㎑	Video modulation ±8%max Video carrier frequency ±150㎑ max Video carrier output level ±4dB max Audio modulation ±18% max Audio carrier frequency ±20㎑ max P/S ratio ±3dB max	Video S/N ±6dB Video output ±0.2Vp-p max Noise limiting sensitivity ±6dB Audio output ±30% max	test condition 4-1-1
4-2. Humidity load teat	same as in item 4-1			test condition 4-2-1
4-3. Cold test	same as in item 4-1			test condition 4-3-1
4-4. Operating life test	same as in item 4-1			test condition 4-4-1
4-5. High voltage test	same as in item 4-1			test condition 4-5-1
4-6. Vibration test	same as in item 4-1			test condition 4-6-1
4-7. Impact test	same as in item 4-1			test condition 4-7-1

					A P P D.	C H K D.	D S G D.	MODEL NO: TADS-H102F
								TITLE: SPECIFICATION
								DOCUMENT NO: BC 40578(20/23)
SYMB	NO	APPD	CHKD	DSGD				

Environmental test condition

Item	Test condition
4-1-1 Heat load teat	1. Initial value measure at standard test condition. 2. Leave samples in 70℃±2℃ for 96±5 hours, and in standard test condition for 30 minutes, then take measurements within 1 hour. 3. Supply voltage : standard ±10% 4. Supply voltage cycle : 1.5h on, 0.5h off
4-2-1 Humidity load test	1. Leave samples in 40±5℃ for 24±2 hours, and in standard test condition for 30 minutes, then take measurements. 2. Leave samples in 40±5℃ 80 ~ 90% rh, for 96±5 hours, and in standard test condition for 30 minutes, then take measurements within 1 hour. 3. Supply voltage : standard +10% 4. Supply voltage cycle : 1.5h on, 0.5h off
4-3-1 Cold test	1. Initial value measure at standard test condition. 2. Leave samples in -20℃±2℃ for 96±5 hours, and in standard test condition for 2 hours, then take measurements within 1 hour.
4-4-1 Operating life test	1. Take measurements in standard test condition. 2. Leave samples for 1000 hours, then take measurements. 3. Supply voltage : standard
4-5-1 High voltage test	Ant. IN : ±15kV, 10 times (150pF charged) series R=150Ω
4-6-1 Vibration test	Vibration test fixture in used to vibrate the tuner with a total amplitude of 1mm and frequency ranging from 10 to 55hz, once per minute consecutively, for 40 minutes in each of three directions, x,y and z.
4-7-1 Impact test	1. Impact acceleration : 50m/sec² 2. Impact time : 11msec 3. Impact time & direction : 3 times per each 6 sides
5. Mechanical characteristics	
5-1 Outline view assembly appearance	No defects of wiring, soldering and assembling. No dirt, rust, corrosion or foreign material.

					A P P D.	C H K D.	D S G D.	MODEL NO: TADS-H102F
								TITLE: SPECIFICATION
								DOCUMENT NO: BC 40578(21/23)
SYMB	NO	APPD	CHKD	DSGD				

Item	Test condition
5-2 Appearance structure	
Dimension	As assembly drawing.
Mounting	As assembly drawing.
Weight	Approximately 60±5g
6. Others	
6-1. Ant jack Load Test	Crack, defection and shaking should not be existed with 15kg.cm banding moment after caulking. 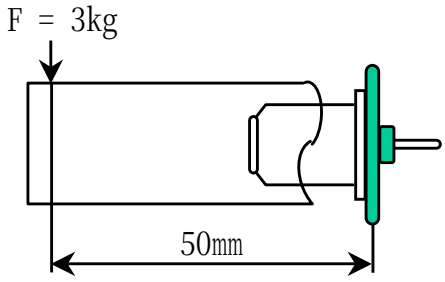
7. The Certificate of LAED-Free Part	
7-1. Information	■ PHASE 1 : Component with LAED-free solder (Component with the heatproof nature of solder for LAED-free solder) ■ PHASE 2 : Applicable for Phase 1 & Component's electrode pin with LAED-free ■ PHASE 3 : Applicable for Phase1,2 & LAED-free Component (Overall part and raw material of Component with LEAD-free)
7-2. LEAD Free Schedule	■ PHASE 2 : October. 2004 - Start.
7-3. LEAD Free Marking	The method for the LEAD-free marking on the TUNER & minimum unit of packing box. ⇒ " GREEN " Color Label used.

					A P P D.	C H K D.	D S G D.	MODEL NO: TADS-H102F
								TITLE: SPECIFICATION
								DOCUMENT NO: BC 40578(22/23)
SYMB	NO	APPD	CHKD	DSGD				

7. TEST CIRCUIT

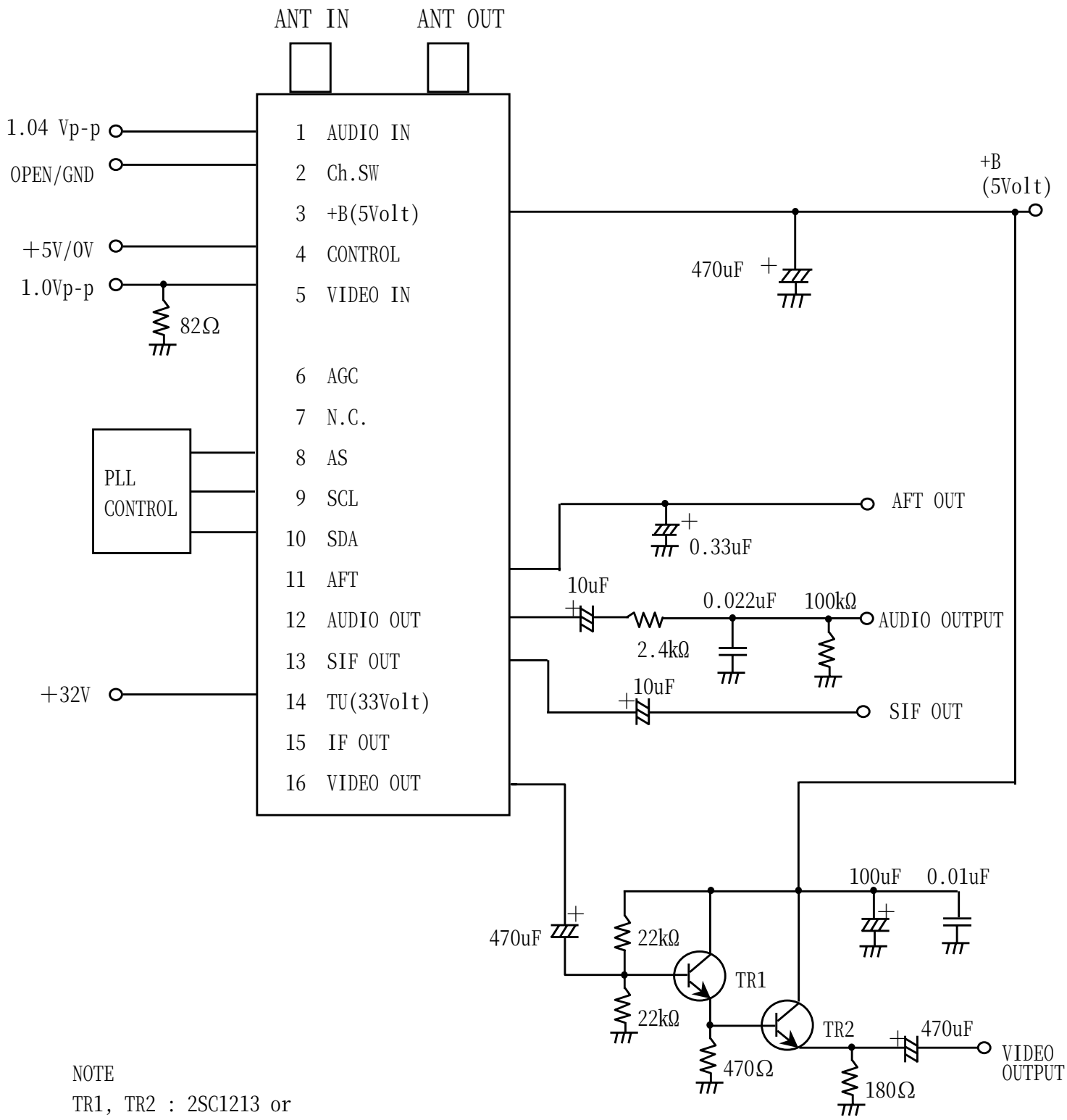

NOTE
TR1, TR2 : 2SC1213 or EQUIVALENT

					A P P D.	C H K D.	D S G D.	MODEL NO: TADS-H102F
								TITLE: SPECIFICATION
								DOCUMENT NO: BC 40578(23/23)
SYMB	NO	APPD	CHKD	DSGD				

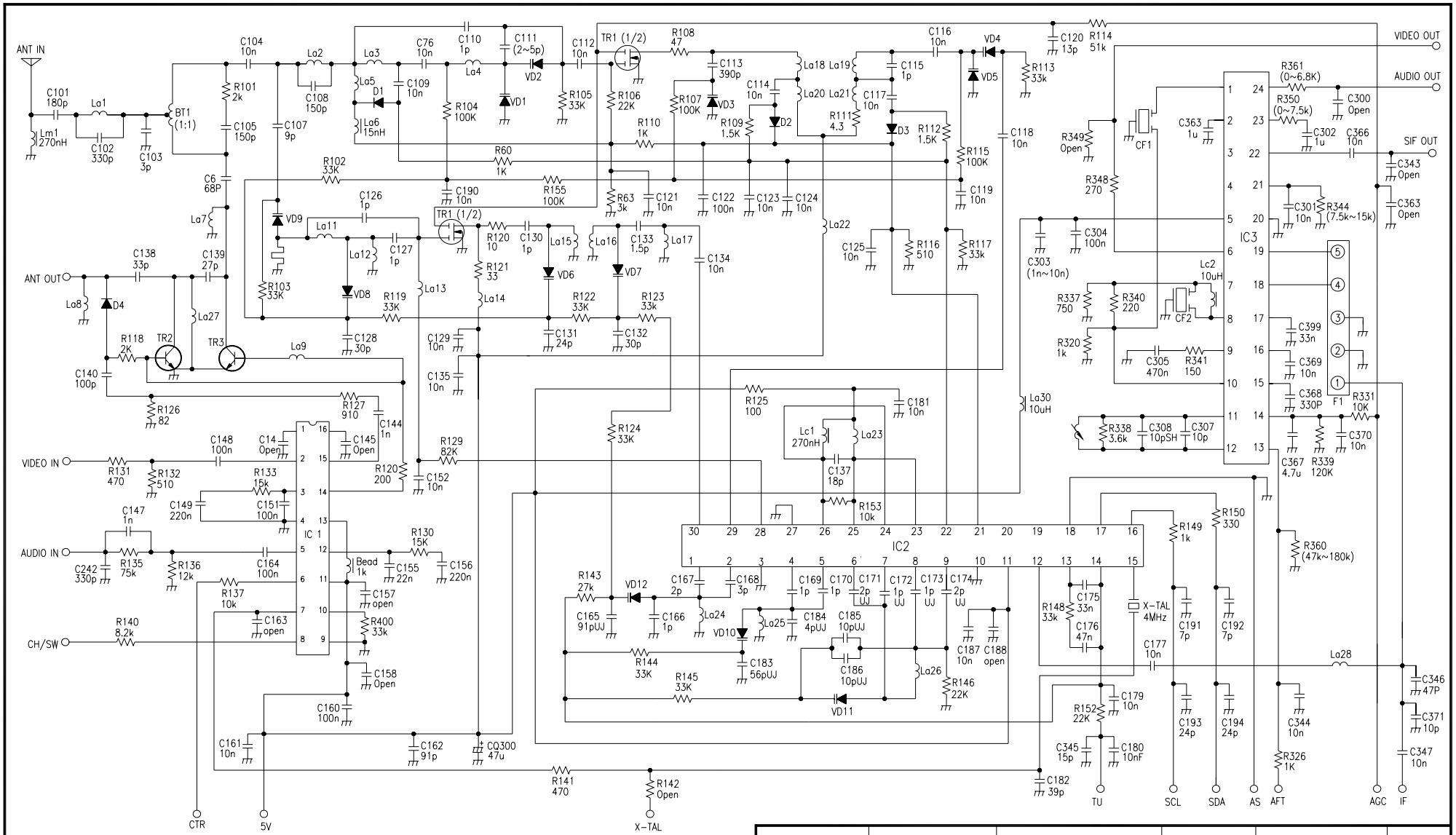

1. Unless otherwise specified.
   All resistors are in ohm. Capacitors are in farad. inductor are in henry.
2. Semiconductors are as follows.

TR1	: TBB1002, BG3130R	F1	: M1867D, TSF5232F
TR2,TR3	: 2SC4774, 2SC5345, BF799W	CF1	: SFSRA4M50, LT4.5MH, EFCS4R5HS5
IC1	: TA1372FNG	CF2	: TPSRA4M50
IC2	: LGT04-1	VD1~VD12	: BB659C, HVC200A, 1W403
IC3	: LGS04-3	D1~D4	: BA892, HSC277, KDS114E

PART NO.	NAME	MATERIAL	SPEC.	FINISH	A3 SIZE

ZONE	SYMB	DATE OR NO.	APPD	CHKD	DSGD

APPD.	CHKD.	DSGD.	DRAW.	UNIT	SCALE
'05.02.21 Ik Ho Ahn	'05.02.21 Young Suk Ro	'05.02.21 Hye Ryung Lee	'05.02.21 Myo Soon Kim	mm	

TITLE: TADS-H102F

CIRCUIT DIAGRAM

DOCUMENT NO. BD30498

TERMINAL No.	1	2	3	4	5	6	7	8	9	10	11	12	13	14	15	16
TERMINAL NAME	A/I	CH/SW	+B	CTR	V/I	AGC	N.C	AS	SCL	SDA	AFT OUT	AUDIO OUT	SIF OUT	TU(33V)	N.C	VIDEO OUT

NOTE
1. TOLERANCES ARE ±0.5 UNLESS OTHERWISE SPECIFIED.
2. LOT NO. SHALL BE CONFORMED TO LGIT STANDARD SPECIFICATION.
3. THE PITCH BETWEEN TERMINAL IS SPECIFIED AT THE ROOT.
4. MATERIAL OF CHASSIS AND COVER IS TIN PLATE.
5. AS LONG AS THE OUTER APPEARANCE DOESN'T AFFECT THE PERFORMANCE OF THE PRODUCT, IT CAN BE CHANGED WITHOUT PRIOR NOTICE.
6. DIMENSION OF P.C.B FOR 3 IN 1, MD MOUNTING.(REFERENCE ONLY) (VIEWED FROM COPPER PATTERN)

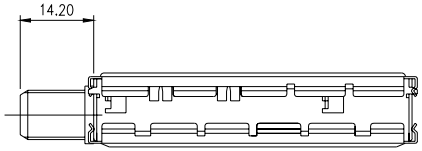

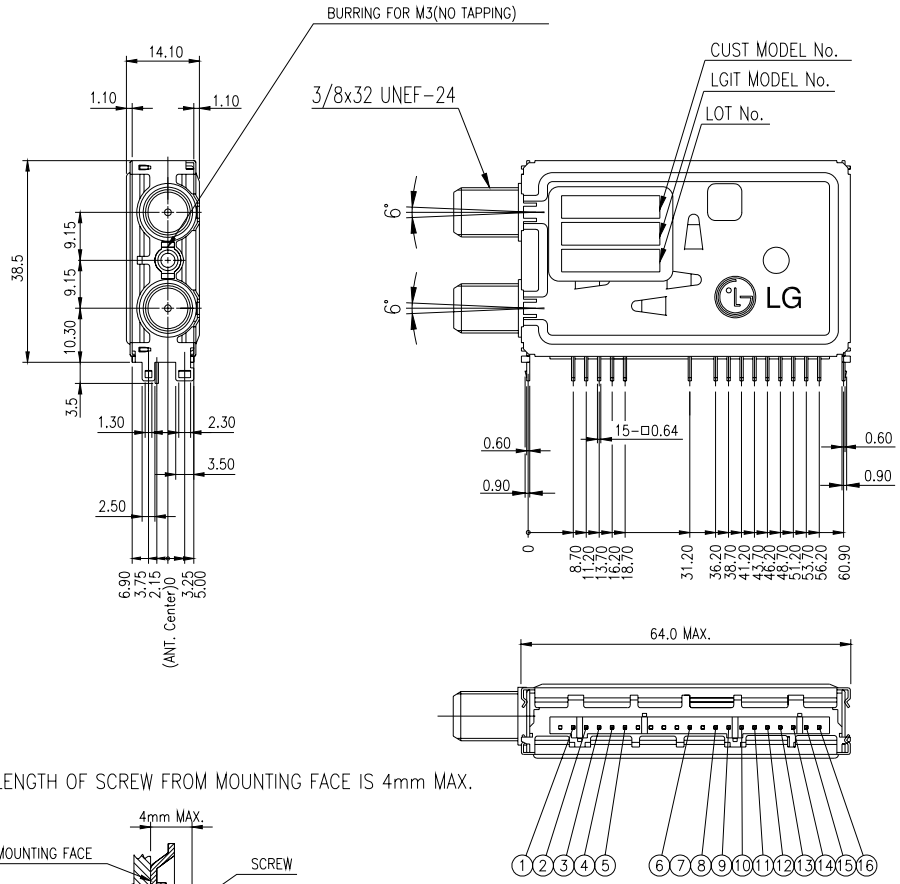

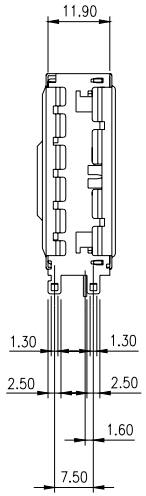

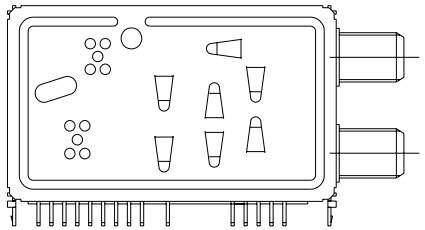

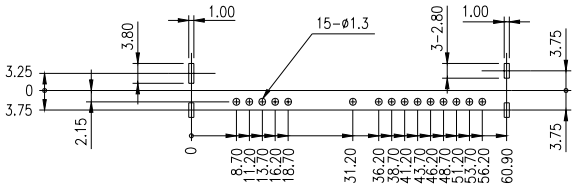

7. THE LENGTH OF SCREW FROM MOUNTING FACE IS 4mm MAX.

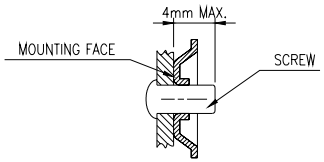

PART NO.	NAME	MATERIAL	SPEC.	FINISH

ZONE	SYMB	DATE OR NO.	APPD	CHKD	DSGD

APPD.	CHKD.	DSGD.	DRAW.	UNIT	SCALE
'05.02.22 Kim Byoung Yong		'05.02.22 Lee Kap Soul		mm	1 : 1

TITLE: OUTLINE DRAWING

DOCUMENT NO. TE30922

TADS-H102F

LG Innotek Co., Ltd.

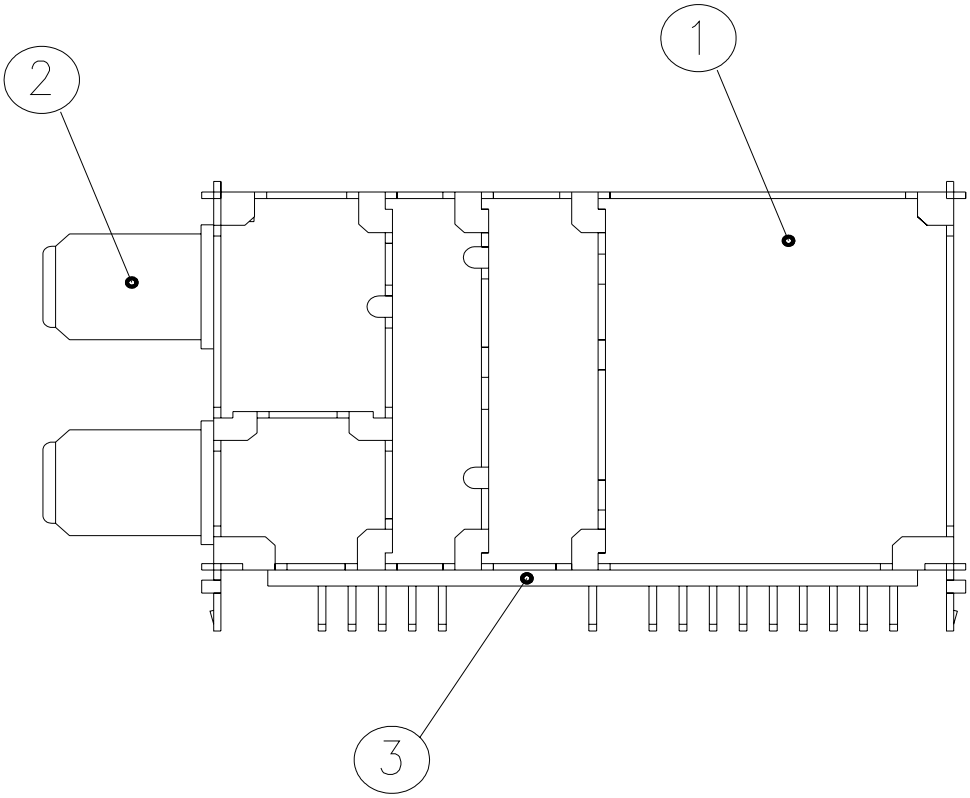

					LG Innotek CO., Ltd.			
					APPD. '04.11.18 Kim Byoung Yong	CHKD.	DSGD. '04.11.18 Lee Kap Soul	NOTE TADS-TYPE
								TITLE INSULATION MATERIAL LIST
SYMB	NO	APPD	CHKD	DSGD				DOCUMENT NO. BN40053(1/11)

LGIT(T)개발025 A4 모 (931030) LG IT

INSULATING MATERIALS TABLE

LGP MODEL NO	DATE	APPD	CHKD	DSGD	LGP MODEL NO	DATE	APPD	CHKD	DSGD
TADS-H102F	2004-11-18	KBY		LKS					

(NOTE) THE MATERIALS MARKED *IN CATEGORY NUMBER ARE CURRENT USE AND OTHERS CAN BE USED IN THE FUTURE.

NO	DESCRIPTION	BASE MATERIALS								PRINTED WIRING BOARD			NOTE
		GENERIC I.D	MANUFACTURER	CAT. NO. OR GRADE	FLAME CLASS	HWI PLC	HAI PLC	CTI PLC	UL FILE NO	UL MARK	MANUFACTURER	FLAME CLASS	
1	PRINTED WIRING	PHENOLIC	HITACHI	MCL-437F	94V-0	300+	200+	-	E80148	▲SYH-294V-0	SANYOH CO.,LTD	94V-0	
	BOARD	RESIN OF	CHEMICAL								(E52553)		
		COPPER CLAD	CO., LTD							▲CMK-77X	CMK CORP CO.,LTD	94V-0	
		LAMINATES									(E41363)		
										P10A ▲ OR	GOLDSTAR		
										GSEP-2110A▲	TELECOMMUNICATION		
											CO.,LTD		
											(E71042)		
										KC-15 ▲	KOREA CIRCUIT		
											CO.,LTD		
											(E55991)		
										H.C.I40HI▲	PT.HITACHI	94V-0	
											CHEMICAL INDONESIA		
											(E41480)		
			MATSUSHITA	R-8700	94V-0	120+	200+	500	E81336		GRAND CIRCUIT INDUSTRY	94V-0	
			ELECTRIC								SDN BHD		
			WORK LTD								(E162032)		
										H.C.I40MA▲	PT.HITACHI	94V-0	
											CHEMICAL INDONESIA		
											(E41480)		

NO	DESCRIPTION	BASE MATERIALS								PRINTED WIRING BOARD			NOTE
		GENERIC I.D	MANUFACTURER	CAT. NO. OR GRADE	FLAME CLASS	HWI PLC	HAI PLC	CTI PLC	UL FILE NO	UL MARK	MANUFACTURER	FLAME CLASS	
			OAK INDUSTRIES	*DS-1107(A)	94V-0	256	200+	-	E39283	▲SH-4456	SAM HAN ELECTRIC		
			KOREA LTD								CO.		
											(E94013)		
										▲GSEP-2112	GOLDSTAR		
											TELECOMMUNICATION		
											CO.,LTD		
											(E71042)		
										KC-15 ▲	KOREA CIRCUIT		
											CO.,LTD		
											(E55991)		
										▲SM 5-V0	SEONG MIN	94V-0	
											ELECTRONICS CO.,LTD		
											(E172689)		
										H.C.I40DS▲	PT.HITACHI	94V-0	
											CHEMICAL INDONESIA		
											(E41480)		
				OAK-FR2-1	94V-0	300+	200+	-	E39283	▲GSEP-2108	GOLDSTAR		
											TELECOMMUNICATION		
											CO.,LTD		
											(E71042)		
										▲SH-4458	SAM HAN ELECTRIC		
											CO.		
											(E94013)		

NO	DESCRIPTION	BASE MATERIALS								PRINTED WIRING BOARD			NOTE
		GENERIC I.D	MANUFACTURER	CAT. NO. OR GRADE	FLAME CLASS	HWI PLC	HAI PLC	CTI PLC	UL FILE NO	UL MARK	MANUFACTURER	FLAME CLASS	
		PAPER EPOXY	HITACHI	MCL-E-47	94V-0	300+	200+	600+	E80148	▲⧗ A1	SANYOH CO., LTD	94V-1	
		RESIN LAMINATES	CHEMICAL								(E52553)		
			CO.,LTD										
										▲ CMK-9Y	CMK CORP CO., LTD	94V-1	
											(E41363)		
										▲ GSEP-2113	GOLDSTAR		
											TELECOMMUNICATION		
											CO., LTD		
											(E71042)		
										▲SHI	SAM HAN		
											ELECTRIC CO.,LTD		
											(E94013)		
										KS-9	KOREA CIRCUIT		
											CO., LTD		
											(E55991)		
										H.C.I 7B▲	PT.HITACHI	94V-0	
											CHEMICAL INDONESIA		
											(E41480)		

NO	DESCRIPTION	BASE MATERIALS								PRINTED WIRING BOARD			NOTE
		GENERIC I.D	MANUFACTURER	CAT. NO. OR GRADE	FLAME CLASS	HWI PLC	HAI PLC	CTI PLC	UL FILE NO	UL MARK	MANUFACTURER	FLAME CLASS	
	PRINTED WIRING	GLASSFIBER	MATSUSHITA	R-1781	94V-0	120+	200+	500	E81336	▲C KX	CMK CORP	94V-0	
	BOARD	REINFORCED EPOXY	ELECTRIC								(E41363)		
		RESIN COPPER	WORK LTD										
		CLAD LAMINATES								▲NE 2S	NIPPON ELEC	94V-0	
											CO., LTD		
											(E41166)		
										⧗TO ▲	SANYOH	94V-0	
											CO., LTD		
											(E52553)		
										E4A▲ OR	GOLD STAR	94V-0	
										GSEP-2304A▲	TELECOMMUNI-		
											CATION CO., LTD		
											(E71042)		
										巴5 ▲	LIANG DAR	94V-0	
											TECHNOLOGY		
											CO,.LTD		
											(E166132)		
										H.C.I 113▲	PT.HITACHI	94V-0	
											CHEMICAL INDONESIA		
											(E41480)		

NO	DESCRIPTION	BASE MATERIALS								PRINTED WIRING BOARD			NOTE
		GENERIC I.D	MANUFACTURER	CAT. NO. OR GRADE	FLAME CLASS	HWI PLC	HAI PLC	CTI PLC	UL FILE NO	UL MARK	MANUFACTURER	FLAME CLASS	
		GLASSFIBER	MATSUSHITA	R-1781	94V-0	120+	200+	500	E81336	SH.S9 94V-0 ▲	SAM HAN	94V-0	
		REINFORCED EPOXY	ELECTRIC								ELECTRIC CO.,LTD		
		RESIN COPPER	WORK LTD								(E94013)		
		CLAD LAMINATES											
										▲ (S M) 5-V0	SEONG MIN	94V-0	
											ELECTRONICS CO.,LTD		
											(E172689)		
			HITACHI	MCL-E-637	94V-0	300+	200+	600+	E80148	89▲ OR	HITACHI CHEM.	94V-0	
			CHEMICAL							MCL-E-637▲	CO., LTD		
			CO., LTD							(FAC.ID:KCH)	(E41480)		
										(K) KS-7B ▲	KOREA CIRCUIT	94V-0	
											CO., LTD		
											(E55991)		
										(K)A KS-7B ▲	KCA ELECTRONICS,INC	94V-0	
											(E55991)		
										H.C.I 89A▲	PT.HITACHI	94V-0	
											CHEMICAL INDONESIA		
											(E41480)		

NO	DESCRIPTION	BASE MATERIALS								PRINTED WIRING BOARD			NOTE
		GENERIC I.D	MANUFACTURER	CAT. NO. OR GRADE	FLAME CLASS	HWI PLC	HAI PLC	CTI PLC	UL FILE NO	UL MARK	MANUFACTURER	FLAME CLASS	
		EPOXY RESIN OF	DOOSAN	OAK-910	94V-0	300	23	-	E37002	GSEP-2304A▲	GOLD STAR	94V-0	
		COPPER CLAD	ELECTRO-								TELECOMMUNI-		
		LAMINATED SHEETS	MATERIALS								CATION CO., LTD		
			CO., LTD								(E71042)		
										(K) KS-7A ▲	KOREA CIRCUIT	94V-0	
											CO., LTD		
											(E55991)		
				OAK-FR-400	94V-0	300	15	-	E39283	▲GSEP-2302	GOLD STAR	94V-0	
											TELECOMMUNI-		
											CATION CO., LTD		
											(E71042)		
				*DS-7209	94V-0	300	23	-	E37002	GSEP-2304A ▲	GOLD STAR	94V-0	
											TELECOMMUNI-		
											CATION CO., LTD		
											(E71042)		
										(K) KS-7A ▲	KOREA CIRCUIT	94V-0	
											CO., LTD		
											(E55991)		
										▲ (S M) 5-V0	SEONG MIN	94V-0	
											ELECTRONICS CO.,LTD		
											(E172689)		
										H.C.I 55DS▲	PT.HITACHI	94V-0	
											CHEMICAL INDONESIA		
											(E41480)		

NO	DESCRIPTION	BASE MATERIALS								PRINTED WIRING BOARD			NOTE
		GENERIC I.D	MANUFACTURER	CAT. NO. OR GRADE	FLAME CLASS	HWI PLC	HAI PLC	CTI PLC	UL FILE NO	UL MARK	MANUFACTURER	FLAME CLASS	
		EPOXY RESIN OF	DOOSAN	*DS-7209						SH S1▲ or	SAM HAN	94V-0	
		COPPER CLAD	ELECTRO-							SH-1692▲	ELECTRONICS CO.,LTD		
		LAMINATED SHEETS	MATERIALS								(E94013)		
			CO., LTD										
										125X▲	SAEHAN ELECTRONICS	94V-0	
											CO., LTD		
											(E91463)		
										CJ4-V-0 ▲ or	CHEONG Ju ELECTRONICS	94V-0	
											CO., LTD		
											(E104487)		
										55▲	Wonil Circuit	94V-0	
											CO., LTD		
											(E119680)		
										GCI 3AV0 ▲ SZ	GRAND CIRCUIT INDUSTRY	94V-0	
											SDN BHD		
											(E162032)		
		GLASSFIBER	NIKKAN	L-6514C2	94V-0	300+	200+	220	E46785	▲ C. 111XR	CMK CORP	94V-0	
		REINFORCED EPOXY	INDUSTRIES								(E41363)		
		RESIN COPPER	CO., LTD										
		CLAD LAMINATES								H.C.I 58NI▲	PT.HITACHI	94V-0	
											CHEMICAL INDONESIA		
											(E41480)		

NO	DESCRIPTION	BASE MATERIALS								PRINTED WIRING BOARD			NOTE
		GENERIC I.D	MANUFACTURER	CAT. NO. OR GRADE	FLAME CLASS	HWI PLC	HAI PLC	CTI PLC	UL FILE NO	UL MARK	MANUFACTURER	FLAME CLASS	
2	F-CONNECTOR	DIALLYL	SUMITOMO BAKE-	*AM-100	94HB	-	-	-	E41429				
		PHTHALATE RESIN	LITE CO., LTD.										
		POLYPHENYLENE	TONEN CHEMICAL	HT 1301	94V-0	-	-	-	E125354				
		SULFIDE	CORP NEW										
			PRODUCT DIV										
			PHILLIPS	*R-7	94V-0	-	-	-	E54700				
			PETROLEUM	*R-4 XT	94V-0	-	-	-	E54700				
			CO., LTD.										
			TOSO SUSTEEL	GS-40	94V-0	-	-	-	E102861				
			CO., LTD.										
		POLYAMIDE NYLON	E I DUPOINT DE	HTNFR51G35L	94V-0	-	-	-	E41938				
		RESIN	NEMOURS &										
			CO., INC										

NO	DESCRIPTION	BASE MATERIALS								PRINTED WIRING BOARD			NOTE
		GENERIC I.D	MANUFACTURER	CAT. NO. OR GRADE	FLAME CLASS	HWI PLC	HAI PLC	CTI PLC	UL FILE NO	UL MARK	MANUFACTURER	FLAME CLASS	
3	COMPOUND	POLYPHENYLENE	DAINIPPON	*FZ1140	94V-0	3	4	-	E53829				
	TERMINAL	SULFIDE	INK & CHEMICALS										
			INC										
		POLYAMIDE NYLON	E I DUPONT DE	*HTNFR51G35L	94V-0	-	-	-	E41938				
		RESIN	NEMOURS &										
			CO., INC.										
		POLYAMIDE NYLON	HYOSUNG T&C	2413GW	94V-0	-	-	-	E78648(M)				
		RESIN	CO., LTD PP DIV										
		POLYAMIDE NYLON	E I DUPONT DE	*70G33HS1L	HB	4	0	-	E41938				
		RESIN	NEMOURS &										
			CO., INC.										
		POLYAMIDE NYLON	MITSUI	*E430N(T5)	94V-0	-	-	-	E52579(M)				
		RESIN	CHEMICALS,INS.										