# SAR Compliace Test Report

APPLICANT NAME & ADDRESS :
LG Electronics Inc.
459-9, Kasan-dong, Keumchun-ku,
Seoul 153-023, Korea

DATA & LOCATION OF TESTING
Dates of testing : 2004 11/16 ~ 11/29
Test Site : ESTECH Co., Ltd. Korea

Test Device :

Models : LG-MX4170, LG-BX4170

FCC ID :BEJBX4170

TYPE : PCS Licensed Transmitter held to ear Tri-Mode Dual Band Cellular/PCS Phone(AMPS/CDMA)

| | | | |
|---|---|---|---|
| Test report no : | ESTSAR0411-02 | Number of page : | 28 |
| Contact person : | Cheol-Goo Lee | Responsible test Engineer : | M.J.Song |
| Testing has been Carried out in Accordance with : | IEEE P1528-200X Draft 6.4 Recommended Practice for Determining the Peak Spatial-Average Specific Absorption Rate(SAR) in the Human Body Due to Wireless Communications Device : Experimental Techniques | | |
| Applicant Type : | Certification | | |
| FCC CLASSIFICATION : | Licensed Portable Transmitter held to ear (PCE) | | |
| FCC Rule Part(s) | §2.1093; FCC/OET Bulletin 65 Supplement C (July 2001) | | |
| Test results : | The Tested device complies with the requirements in respect of all parameters subject to the test. The test results and statements relate only to the items tested. The test report shall not be reproduced recept in full, without written approval of the laboratory. | | |

-LG-MX4170, LG-BX4170 are same products
-Only model name is different

Date and Signatures : 2004-11-29
Report Prepared By : Engineer/ M.J.Song
(Signature)
Engineering Manage / Jay Kim
(Signature)

# Table of Contents

1. SUMMARY FOR SAR TET REPORT ---------- 3/22
1.1 Head Configuration ---------- 3/22
1.2 Body Worn Configuration ---------- 3/22
1.3 Measurement Uncertainty ---------- 3/22
2. INTRODUCTION ---------- 4/22
3. DESCRIPTION OF THE DEVICE UNDER TEST ---------- 5/22
3.1 Antenna Description ---------- 5/22
3.2 Device Description ---------- 5/22
3.3 Battery Option ---------- 5/22
4. TEST CONDITIONS ---------- 6/22
4.1 Ambient Conditions ---------- 6/22
4.2 RF Characteristics of The Test Site ---------- 6/22
4.3 Test Signal, Frequencies, And Output Power ---------- 6/22
5. DESCRIPTION OF THE TEST EQUIPMENT ---------- 7/22
5.1 Test System Specifications ---------- 7/22
5.2 SAR Measurement Setup ---------- 7/22
5.3 DASY 4 E-Field Probe System ---------- 8/22
5.4 Phantom & Equivalent Tissues ---------- 10/22
6. DESCRIPTION OF THE TEST PROCEDURE ---------- 12/22
6.1 Definition of Reference Point ---------- 12/22
6.2 Test Configuration Positions ---------- 13/22
6.3 Scan Procedures ---------- 16/22
6.4 SAR Averaging Methods ---------- 16/22
7. MEASUREMENT UNCERTAINTY ---------- 17/22
8. SYSTEM VERIFICATION ---------- 18/22
8.1 Tissue Verification ---------- 18/22
8.2 Test System Validation ---------- 18/22
9. RESULTS ---------- 19/22
10. REFERENCES ---------- 22/22
APPENDIX A : Validation Test Data
APPENDIX B : SAR Test Setup Photographs
APPENDIX C : SAR Test Data
APPENDIX D : Calibration Certificates

# 1. SUMMARY FOR TEST REPORT

| | |
|---|---|
| FCC ID | BEJBX4170 |
| Date of test | 2004 11/16 ~ 11/29 |
| Responsible test engineer | Jay Kim |
| Measurement performed by | M.J.Song |
| EUT Type | Tri-Mode Dual Band Cellular/PCS Phone(AMPS/CDMA) |
| Tx Frequency | 824.04 ~ 848.97 MHz (AMPS)<br>824.70 ~ 848.31 MHz (CDMA)<br>1851.25 ~ 1908.75 MHz (PCS) |
| Rx Frequency | 869.04 ~ 893.97 MHz (AMPS)<br>869.70 ~ 893.31 MHz (CDMA)<br>1931.25 ~ 1988.75 MHz (PCS) |
| Max. RF Output Power | CDMA (24.00 dBm) / AMPS (27.00 dBm) / PCS (24.00 dBm) |

Maximum Results Found During SAR Evaluation

## 1.1 Head Configuration

Max. SAR Measurement

| FREQUENCY | | Modulation | Power | | Device test position | Antenna position | SAR (W/kg) |
|---|---|---|---|---|---|---|---|
| MHz | Ch | | dBm | Battery | | | |
| 1908.8 | 1175 | PCS | 24 | Standard | Left Cheek Touch | – | 1.27 |

## 1.2 Body Worn Configuration

Max. SAR Measurement

| FREQUENCY | | Modulation | Power | | Separation test position | Antenna position | SAR (W/kg) |
|---|---|---|---|---|---|---|---|
| MHz | Ch | | dBm | Battery | | | |
| 1851.3 | 25 | PCS | 24 | Standard | 1.5 [w/o Holster] | – | 0.894 |

## 1.3 Measurement Uncertainty

| | |
|---|---|
| Combine Standard Uncertainty | 11.21 / 11.37 (k=1) |
| Extended Standard Uncertainty | 22.42 / 22.72 (k=2, 95% CONFIDENCE LEVEL) |

# 2. INTRODUCATION

The FCC has adopted the guidelines for evaluating the environmental effects of radio frequency radiation in ET Docket 93-62 on Aug. 6, 1996 to protect the public and workers from the potential azards of RF emissions due to FCC-regulated portable device.[1]

The safety limits used for the environmental evaluation measurements arethe criteria published by the based on American National Standards Institute (ANSI) For localized specific absorption rate (SAR) in IEEE/ANSI C95.1-1992 Standard for safety Levels with Respect to Human Exposure to Radio Frequency Electronic Fields, 3 kHz to 300 GHz. (c) 1992 by the institute of Electrical and Electronics Engineers, Inc., New York, New York 10017.[2] The measurement procedure described in IEEE/ANSIC95.3-1992 Recommended Practice for the Measurement of Potentially Hazardous Electromagnetic Fields – RF and Microwave[3] is used for guidance in measuring SAR due to the RF radiationexposure from the Equipment Under Test (EUT). These criteria for SAR evaluation are similar to those recommended by the National Council on Radiation Protection and Measurements (NCRP) in Biological Effects and Exposure Criteria for Radio Frequency Electromagnetic Fields," NCRP Report No. 86 (c) NCRP, 1986, Bethesda, MD20814.[6] SAR is ameasure of the rate of energy absorption due to exposure to an RF transmitting source. SAR values have been related to threshold levels for potential biological hazards.

## SAR Definition

Specific Absorption Rate (SAR) is defined as the time derivative (rate) of the incremental energy (dU) absorbed by (dissipated in) an incremental mass (dm) contained in a volume element (dV) of a given density (ρ). it is also defined as the rate of rf energy absorption per unit mass at a point in an absorbing body (see Fig. 3.1.).

$$SAR = \frac{d}{dt}\left(\frac{dU}{dm}\right) = \frac{d}{dt}\left(\frac{dU}{\rho\, dv}\right)$$

Figure 2.1 SAR Mathematical Equation

SAR is expressed in units of Watts per Kilogram (W/kg).

$$SAR = \sigma E^2 / \rho$$

Where:

σ = conductivity of the tissue-simulant material (S/m)
E = mass density of the tissue-simulant material (kg/㎥)
ρ = Total RMS electric field strength (V/m)

# 3. DESCRIPTION OF THE DEVICE UNDER TEST

The FCC rules for evaluating portable devices for RF exposure compliance are contained in 47 CFR §2.1093. For purposes of RF exposure evaluation, a portable device is defined as a transmitting device designed to be used with any part of its radiating structure in direct contact with the user's body or within 20 centimeters of the body of a user or bystanders under normal operating conditions. This category of devices would include hand-held cellular and PCS telephones that incorporate the radiating antenna into the hand-piece and wireless transmitters that are carried next to the body. Portable sevices are evaluated with respect to SAR limits for RF exposure. The applicable SAR limit for portable transmitters used by consumers is 1.6 watts/kg, which is averaged over any one gram of tissue defined as a tissue volume in the shape of a cube.

## 2.1 Antenna Description

| | |
|---|---|
| Type | Fixed |
| Location | Right the back cover, the top of the device |
| Configuration | Helical & Meander |

## 2.2 Device Description

| | |
|---|---|
| FCC ID | BEJBX4170 |
| Serial numbers | NONE |
| Exposure environment | Uncontrolled exposure |
| Device category | Portable device |
| Mode(s) of Operation | AMPS / CDMA / PCS |
| Modulation Mode(s) | AMPS / CDMA / PCS |
| Duty Cycle | 1 |
| Transmitting FreQuency Range(s) | 824.04 ~ 848.97 MHz (AMPS)<br>824.70 ~ 848.31 MHz (CDMA)<br>1851.25 ~ 1908.75 MHz (PCS) |

## 2.3 Battery Options

There is only one battery option available for tested device,

# 4. TEST CONDITIONS

## 4.1 Ambient Conditions

| | |
|---|---|
| Ambient Temperature (°C) | 22 |
| Tissue simulating liquid temperature (°C) | 21 |
| Humidity (%) | 32 |

## 4.2 RF Characteristics of The Test Site

Tests were performed in a fully enclosed RF Shielded environment

## 4.3 Test Signal, Frequencies, And Output Power

The handset was placed into simulated call mode (AMPS & PCS CDMA modes) using manufacturers test codes.

In all operation bands the measurements were performed on lowest, middle and highest channels.

The phone was set to maximum power level during the all tests and at the beginning of the each test the battery was fully charged.

DASY4 system measures power drift during SAR testing by comparing e-field in the same location at the beginning and at the end of measurement. These records were used to monitor stability of power output.

Fig. 4.1 SAR Measurement System

# 5. DESCRIPTION OF THE TEST EQUIPMENT

An SAR measurement system usually consists of a small diameter isotropic electric field probe, a multiple axis probe positioning system, a test device holder, one or more phantom models, the field probe instrumentation, a computer and other electronic equipment for controlling the probe and making the measurements. Other supporting equipment, such as a network analyzer, power meters and RF signal generators, are also required to measure the dielectric parameters of the simulated tissue media and to verify the measurement accuracy of the SAR system.

## 5.1 Test System Specifications

| Test Equipment | Model | Serial Number | Cal. date |
|---|---|---|---|
| DAE | DAE3 | 551 | 2004-04-11 |
| E-Field Probe | ET3DV6 | 1748 | 2004-03-13 |
| Dipole validation kit | D835V2 | 475 | 2003-02-03 |
| | D1900V2 | 5d032 | 2004-04-26 |
| Network analyzer | 8753ES | NONE | 2004-10-12 |
| Signal generator | E4421B | GB40052295 | 2004-10-12 |
| RF Power meter | EPM-442A | GB37170412 | 2004-10-12 |
| Power Sensor | 8481A | 3318A90368 | 2004-10-14 |
| Dielectric Probe | 85070D | US01440154 | - |

## 5.2 SAR Measurement Setup

Measurement are performed using the DASY4 dosimetric assessment system. The DASY4 is made by Schmid & Partner Engineering AG(SPEAG) in Zurich, Switzerland and consists of high precision robotics system (Staubli), robot controller, Pentium IV computer, near-field probe, probe alignment sensor, and the SAM twin phantom containing the brain equivalent material. The robot is a six-axis industrial robot performing precise movements to position the probe to the location (points) of maximum electromagnetic field(EMF) (see Fig. 5.1) A cell controller system contains the power supply, robot controller, teach pendant(Joystick), and a remote control used to drive the robot motors. The pc consists of the Intel Pentium IV 2.4 GHz computer with Windows2000 system and SAR measurement Software DASY4, A/D interface card, monitor, mouse, and keyboard. The Staubli Robot data acquisition electronic (DAE) circuit that performs the signal amplification, signal multiplexing,
AD-conversion, offset measurements, mechanical surface detection, collision detection, etc.

# 5. DESCRIPTION OF THE TEST EQUIPMENT(continued)

Is connected to the Electro-optical coupler (EOC). The EOC performs the conversion from the optical into digital electric signal of the DAE and transfers data to the PC plug-in card.

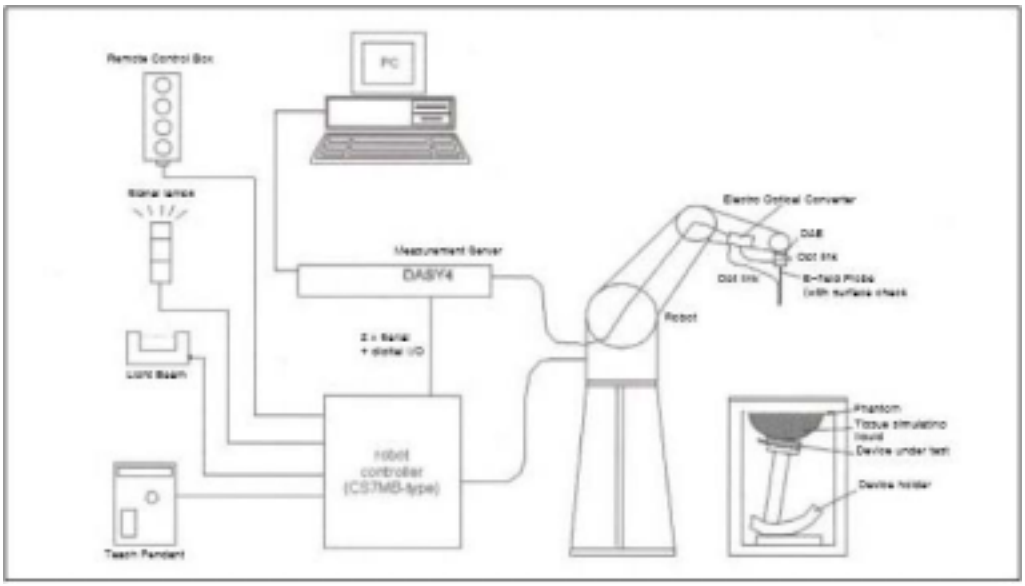


Fig. 5.1 SAR Measurement System Setup

The DAE3 consists of a highly sensitive electrometer-grade preamplifier with auto-zeroing, a channel and gainswitching multiplexer, a fast 16 bit AD-converter and a command decoder and control logic unit. Transmission to the PC-card is accomplished through an optical downlink for data and status information and an optical uplink for commands and clock lines. The mechanical probe mounting device includes two different sensor systems for frontal and sidewise probe contacts. They are also used for mechanical surface detection and probe collision detection. The robot uses its own controller with a built in VME-bus computer. The system is described in detail in [7].

## 5.3 DASY4 E-Field Probe System

The SAR measurements were conducted with the dosimetric probe ET3DV6, designed in the classical triangular configuration [7] (see Fig.5.2) and optimized for dosimetric evaluation. The probe is constructed using the thick film technique; with printed resistive lines on ceramic substrates. The probe is equipped with an optical multifiber line ending at the front of the probe tip. It is connected to the EOC box in the robot arm and provides an automatic detection transmitter, the other half to a synchronized receiver.

# 5. DESCRIPTION OF THE TEST EQUIPMENT(continued)

As the probe approach the surface, the reflection from the surface produces a coupling from the transmitting to the receiving fibers. This reflection increases first during the approach, reaches coupling is zero. The distance of the coupling maximum to the surface is probe angle. The DASY4 software reads the reflection during a software approach and looks for the maximum using a 2nd order fitting (see Table. 5.2). The approach is stopped at reaching the maximum.

Isotropic E-Field Probe

| Isotropic E-Field Probe for Dosimetric Measurements | |
|---|---|
| **Construction** | Symmetrical design with triangular core<br>Interleafed sensors<br>Built-in shielding against static charges<br>PEEK enclosure material (resistant to organic solvents, e.g., glycol) |
| **Calibration** | In air from 10 MHz to 3 GHz<br>In brain and muscle simulating tissue at frequencies of 450 MHz, 900 MHz and 1.8 GHz (accuracy ± 8%)<br>Calibration for other liquids and frequencies upon request |
| **Frequency** | 10 MHz to > 6 GHz; Linearity: ± 0.2 dB (30 MHz to 3 GHz) |
| **Directivity** | ± 0.2 dB in brain tissue (rotation around probe axis)<br>± 0.3 dB in brain tissue (rotation normal to probe axis) |
| **Dynamic Range** | 5 μW/g to > 100 mW/g; Linearity: ± 0.2 dB |
| **Dimensions** | Overall length: 330 mm<br>Tip length: 20 mm<br>Body diameter: 12 mm<br>Tip diameter: 3.9 mm<br>Distance from probe tip to dipole centers: 2.7 mm |

Fig. 5.2 Probe Specifications

# 5. DESCRIPTION OF THE TEST EQUIPMENT(continued)

## 5.4 Phantom & Equivalent Tissues

### SAM Phantom

The SAM Twin Phantom V4.0 is constructed of the fiberglass shell integrated in a wooden table. The shape of the shell is based on data from an anatomical study designed to determine the maximum exposure in at least 90% of all users [11][12]. It enables the dosimetric evaluation of left and right hand phone usage as well as body mounted usage at the flat phantom region. A cover prevents the evaporation of the liquid. Reference markings on the phantom allow the complete setup of all predefined phantom positions and measurement grids by manually teaching three points in the robot.

### Head & Muscle simulation Mixture Characterization

The brain and muscle mixtures consist of a viscous gel using hydroxethlcellullose(HEC) gelling agent and saline solution (see Table 5.1). Preservation with a bactericide is added and visual inspection is made to make sure air bubbles are not trapped during the mixing process. The mixture is calibrated to obtain proper dielectric constant (permittivity) and conductivity of the desired tissue. The head tissue dielectric parameters recommended by the IEEE SCC-34/SC-2 have been specified in P1528 are derived from the issue dielectric parameters computed from the 4-Cole-Cole equations The mixture characterizations used for the brain and muscle tissue simulation liquids are according to the data by C. Gabriel and G. Hartagrove [13]. (see Fig. 5.3)

| Frequency | Head | | Body | |
|---|---|---|---|---|
| (MHz) | εr | σ (S/m) | εr | σ (S/m) |
| 150 | 52.3 | 0.76 | 61.9 | 0.8 |
| 300 | 45.3 | 0.87 | 58.2 | 0.92 |
| 450 | 43.5 | 0.87 | 56.7 | 0.94 |
| 835 | 41.5 | 0.9 | 55.2 | 0.97 |
| 900 | 41.5 | 0.97 | 55 | 1.05 |
| 915 | 41.5 | 0.98 | 55 | 1.06 |
| 1450 | 40.5 | 1.2 | 54 | 1.3 |
| 1610 | 40.3 | 1.29 | 53.8 | 1.4 |
| 1800-2000 | 40 | 1.4 | 53.3 | 1.52 |
| 2450 | 39.2 | 1.8 | 52.7 | 1.95 |
| 3000 | 38.5 | 2.4 | 52 | 2.73 |
| 5800 | 35.3 | 5.27 | 48.2 | 6 |

Fig.5.3 Head and body tissue parameters by the IEEE SCC-34/SC-2 in P1528

# 5. DESCRIPTION OF THE TEST EQUIPMENT(continued)

| 835MHz | | | 1900MHz | | |
|---|---|---|---|---|---|
| | Head | Body | | Head | Body |
| Sugar | 47.31% | 34.31% | DGBE(diethyene Glycol butyl Ether) | 44.91% | 29.96% |
| Deionized water | 51.07% | 65.45% | Deionized water | 54.88% | 69.91% |
| Salt | 1.15% | 0.62% | Salt | 0.21% | 0.13% |
| HEC (hydroxyethyl cellulose) | 0.24% | | | | |
| Preventol | 0.24% | 0.10% | | | |
| ε | 41.0±5% | 55.2±5% | ε | 40.0±5% | 53.3±5% |
| σ | 0.89±10% | 0.97±10% | σ | 1.45±10% | 1.52±10% |

Fig. 5.4 Composition of the Tissue Equivalent Matter

Device Holder for Transmitters

In combination with the SAM Twin Phantom V4.0, the Mounting Device enables the rotation of the accurately, and repeatably be positioned according to the FCC specifications. The device holder can be locked at different phantom locations (left head, right head, flat phantom).

Note : A simulating human hand is not used due to the complex anatomical and geometrical structure of the hand that may produce infinite number of configurations [12]. To produce the worst-case condition (the hand absorbs antenna output power), the hand is omitted during the tests.

# 6. DESCRIPTION OF THE TEST PROCEDURE

## 6.1 Definition of Reference Point

### EAR Reference point

The point "M" is the reference point for the center of the mouth, "ERP" is the ear reference point. The ERP are 15mm posterior to the entrance to the ear canal(EEC) along the B-M line (Back-Mouth), as shown is figure 6.1. The plane passing through the two ear canals and M is defined as the Reference Plane. The line N-F (Neck-Front) is perpendicular to the reference plane and passing through the ERP is called the Reference Pivoting Line (see Figure 6.1) B-M is perpendicular to the N-F line. Both N-F and B-M lines are marked on the external phantom shell to facilitate handset positioning [5].

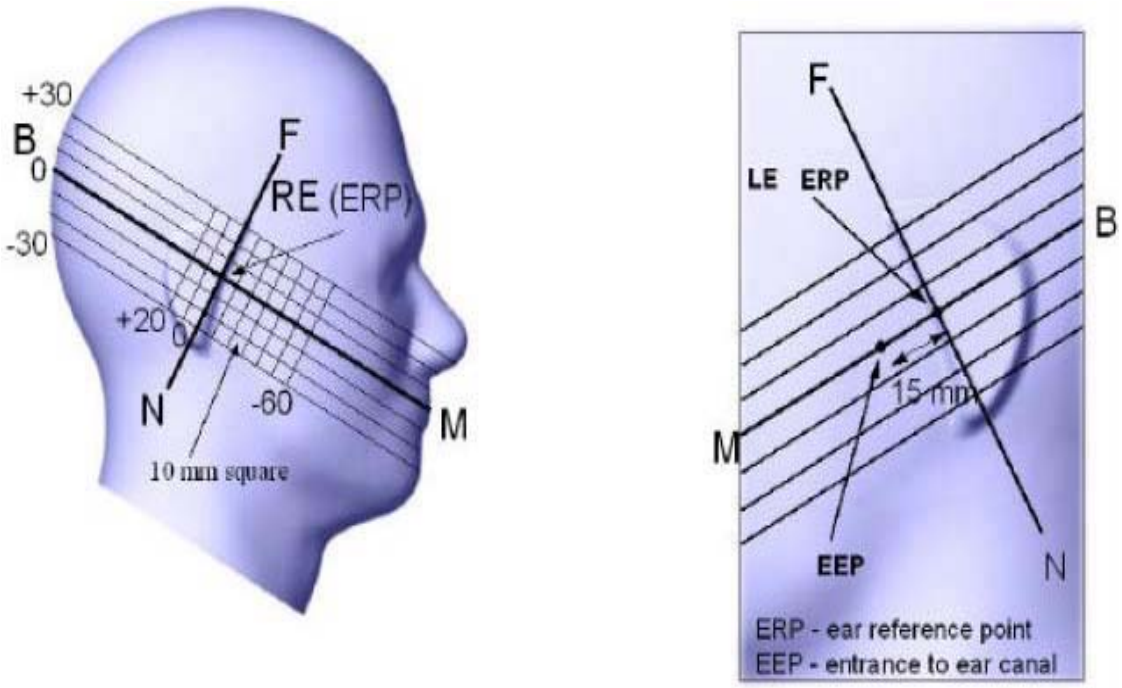


Figure 6.1 Close-up side view of ERP

### Handset Reference Points

Two imaginary lines on the handset were established: the vertical centerline and the horizontal line. The test device was placed in a normal operating position with the "test device reference point" located along the "vertical centerline" on the front of the device aligned to the "ear reference point" (see Fig. 6.2). The "test device reference point" was than located at the same level as the center of the ear reference point. The test device was positioned so that the "vertical centerline" was bisecting the front surface of the handset at it's top and bottom edges, positioning the "ear reference point" on the outer surface of the both the left and right head phantoms on the ear reference point" on the outer surface of the both the left and right head phantoms on the ear reference point.

# 6. DESCRIPTION OF THE TEST PROCEDURE(continued)

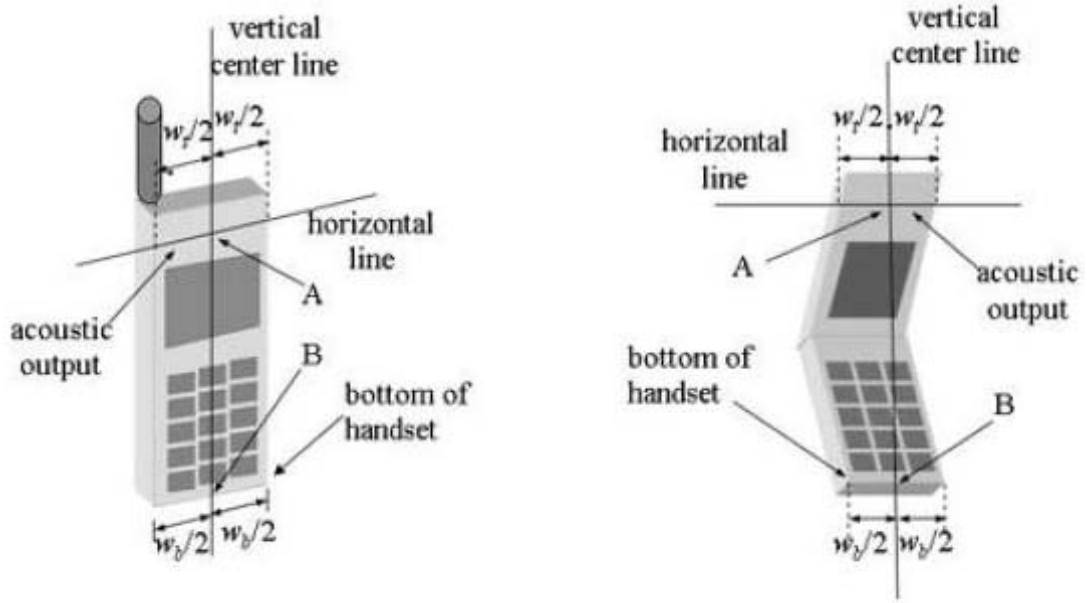


Figure 6.2 Handset Vertical Center & Horizontal Line Reference Points

6.2 Test Configuration Positions
Positioning for Cheek/Touch

1) Ready the handset for talk operation, if necessary. For example, for handsets with a cover piece, open the cover . (If the phone can also be used with the cover closed ,both configurations must be tested.)
2) Define two imaginary lines on the handset: the vertical centerline and the horizontal line. The vertical centerline passes through two points on the front side of the handset: the midpoint of the width wt of the handset at the level of the acoustic output (point A on Figures 6.2), and the midpoint of the width wb of the bottom of the handset (point B). The horizontal line is perpendicular to the vertical centerline and passes through the center of the acoustic output (see Figure 6.2). The two lines intersect at point A. Note that for many handsets, point A coincides with the center of the acoustic output. However, the acoustic output may be located elsewhere on the horizontal line. Also note that the vertical centerline is not ecessarily parallel to the front face of the handset (see Figure 6.2), especially for clamshell handsets, handsets with lip pieces, and other irregularly-shaped handsets.
3) Position the handset close to the surface of the phantom touch that point A is on the (virtual) extension of the line passing through points RE and LE on the phantom (see Figure 6.3), such that the plane defined by the vertical center line and the horizontal line of the phone is approximately parallel to the sagittal plane of the phantom.

# 6. DESCRIPTION OF THE TEST PROCEDURE(continued)

4) Translate the handset towards the phantom along the line passing through RE and LE until the handset touches the ear.
5) While maintaining the handset in this plane, rotate it around the LE-RE line until the vertical centerline is in the plane normal to MB-NF including the line MB (called the reference plane).
6) Rotate the phone around the vertical centerline until the phone (horizontal line) is symmetrical with respect to the line NF.
7) While maintaining the vertical centerline in the reference plane, keeping point A on the line passing through RE and LE, and maintaining the phone contact with the ear, rotate the handset about the line NF until any point on the handset is in contact with a phantom point

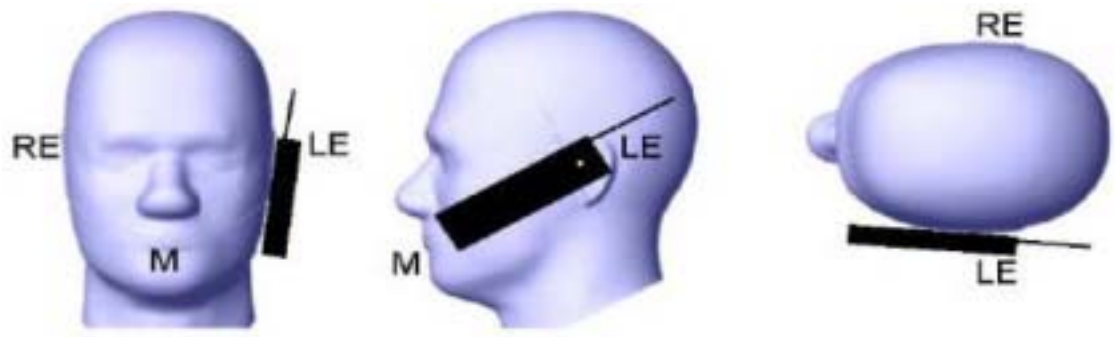


Figure 6.3 “Cheek” or “Touch” Position.

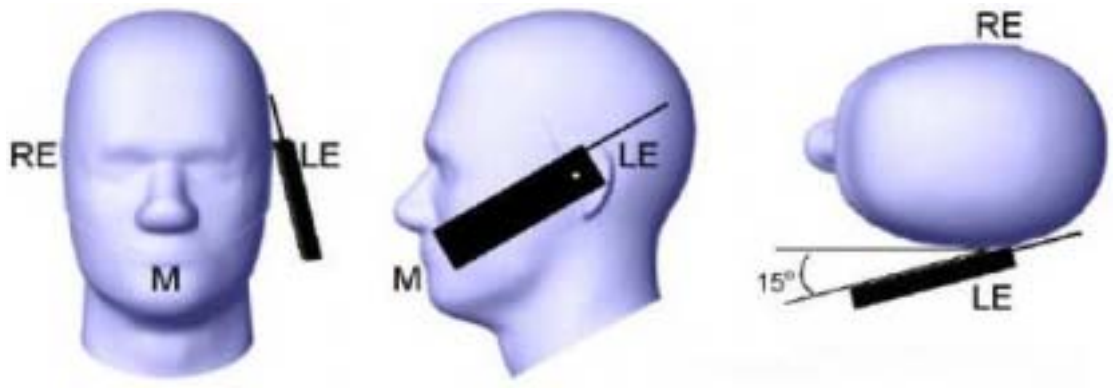


Figure 6.4 “Tilted” Position.

# 6. DESCRIPTION OF THE TEST PROCEDURE(continued)

Positioning for Ear / 15° Tilted

1) Repeat steps 1 to 7 of 6.2(Positioning for Cheek/Touch) to place the device in the "cheek position."
2) While maintaining the orientation of the phone retract the phone parallel to the reference plane far enough to enable a rotation of the phone by 15 degree.
3) Rotate the phone around the horizontal line by 15 degree.
4) While maintaining the orientation of the phone, move the phone parallel to the reference plane until any part of the phone touches the head. (In this position, point A will be located on the line RE-LE). The tilted position is obtained when the contact is on the pinna. If the contact is at any location other than the pinna, the angle of the phone shall be reduced. The tilted position is obtained if any part of the phone is in contact of the ear as well as a second part of the phone is contact with the head.

Body Holder / Belt Clip Configurations

Body-worn operation configurations are tested with the belt-clips and holsters attached to the device and positioned against a flat phantom in a normal use configuration. A device with a headset output is tested with a headset connected to the device. Body dielectric parameters are used.

Accessories for Body-worn operation configurations are divided into two categories: those that do not contain metallic components and those that do contain metallic components. When multiple accessories that do not contain metallic components are supplied with the device, the device is tested with only the accessory that dictates the closest spacing to the body. Then multiple accessories that contain metallic components are supplied with the device, the device is tested with each accessory that contains a unique metallic component. If multiple accessories share an identical metallic component (i.e. the same metallic belt-clip used with different holsters with no other metallic components) only the accessory that dictates the closest spacing to the body is tested.

Body-worn accessories may not always be supplied of available as options for some devices intended to be authorized for body-worn use. In this case, a test configuration where a separation distance between the back of the device and the flat phantom is used. All test position spacings are documented. Transmitters that are designed to operate in front of a person's face, as in push-to-talk configurations, are tested for SAR compliance is tested with the accessory(ies), including headsets and microphones, attached to the device and positioned against a flat phantom in a normal use configuration. In all case SAR measurements are performed to investigate the worst case positioning. Worst-case positioning is then documented and used to perform Body SAR testing.

In order for users to be aware of the body-worn operation requirements for meeting RF exposure compliance, operation instructing instructions and cautions statements are included in the user's manual.

# 6. DESCRIPTION OF THE TEST PROCEDURE(continued)

## 6.3 Scan Procedures

First coarse scans are used for quick determination of the field distribution. Nest cube scan, 7x7x7 points; spacing between each point 5x5x5 mm, is performed around the highest E-field value to determine the averaged SAR-distribution over 1g.

## 6.4 SAR Averaging Methods

The maximum SAR value is averaged over its volume using interpolation and extrapolation.
The interpolation of the points is done with a 3d-Spline. The 3d-Spline is composed of three one-dimensional splines with the "Not a Knot" ?condition [W.Gander, Computermathematik, p. 141-150](x, y and z ?directions) [Numerical Recipes in C, Second Edition, p 123].
The extrapolation is based on least square algorithm [W.Gander, Computermathematik, p. 168-180]. Through the points in the first 30 mm in all z-axis, polynomials of order four are calculated₩. This polynomial is then used to evaluate the points between the surface and the probe tip. The points calculated from the surface, have a distance of 1mm from one another.

# 7. MEASUREMENT UNCERTAINTY

According to CENELEC [17], typical worst-case uncertainty of field measurements is 5 dB.
For well-defined modulation characteristics the uncertainty can be reduced to 3 dB.

| ERROR Description | Uncertainty value ±% | Probability Distribution | Divisor | ci 1 1g | Standard unc. (1g) | vi or Veff |
|---|---|---|---|---|---|---|
| MEASUREMENT SYSTEM | | | | | | |
| Probe Calibration | ± 11.3% / ± 11.9 % | normal | 1 | 1 | ± 11.3% / ± 11.9 % | ∞ |
| Axial Isotropy | ± 4.7 | rectangular | √3 | $(1-cp)^{1/2}$ | ± 1.9% | ∞ |
| Hemispherical Isotropy | ± 9.6 | rectangular | √3 | $(cp)^{1/2}$ | ± 3.9% | ∞ |
| Boundary Effects | ± 1.0 | rectangular | √3 | 1 | ± 0.6% | ∞ |
| Linearity | ± 4.7 | rectangular | √3 | 1 | ± 2.7% | ∞ |
| System Detection Limits | ± 1.0 | rectangular | √3 | 1 | ± 0.6% | ∞ |
| Readout Electronics | ± 1.0 | normal | 1 | | ± 1.0% | |
| Response time | ± 0.8 | rectangular | √3 | 1 | ± 0.5% | ∞ |
| Integration time | ± 2.6 | rectangular | √3 | 1 | ± 1.5% | ∞ |
| RF Amnient Conditions | ± 3.0 | rectangular | √3 | 1 | ± 1.7% | ∞ |
| Probe Positioner Mechanical Tolerance | ± 0.4 | rectangular | √3 | 1 | ± 0.2% | ∞ |
| Probe Positioning with respect to Phantom Shell | ± 2.9 | rectangular | √3 | 1 | ± 1.7% | ∞ |
| Extrapolation, Interpolation and Integration Algorithms for Max. SAR Evaluation | ± 1.0 | rectangular | √3 | 1 | ± 0.6% | ∞ |
| Test Sample Related | | | | | | |
| Test Sample Positioning | ± 2.9 | normal | 1 | 1 | ± 2.9% | 145 |
| Device Holder Uncertainty | ± 3.6 | normal | 1 | 1 | ± 3.6% | 5 |
| Output Power Validation - SAR drift measurement | ± 5.0 | rectangular | √3 | 1 | ± 2.9% | ∞ |
| Phantom and Tissue Parameters | | | | | | |
| Phantom Uncertainty (shape and thickness tolerances) | ± 4.0 | rectangular | √3 | 1 | ± 2.3% | ∞ |
| Liquid conductivity Target - tolerance | ± 5.0 | rectangular | √3 | 0.64 | ± 1.8% | ∞ |
| Liquid Conductivity - measurement uncertainty | ± 2.5 | normal | 1 | 0.64 | ± 1.6% | ∞ |
| Liquid permittivity Target - tolerance | ± 5.0 | rectangular | √3 | 0.6 | ± 1.7% | ∞ |
| Liquid Permittivity - measurement uncertainty | ± 2.5 | normal | 1 | 0.6 | ± 1.5% | ∞ |
| Combined Standard Uncertainty | | | | | ± 11.21% / 11.37 % | 330 |
| Coverage Factor for 95% | | | | K = 2 | | |
| Expanded Standard Uncertainty | | | | | ±22.42% / 22.72% | |

# 8. SYSTEM VERIFICATION

## Tissue Verification

Table 8.1 Simulated Tissue Verification [5]

| MEASURED TISSUE PARAMETERS | | | | | | | | | | |
|---|---|---|---|---|---|---|---|---|---|---|
| Liquid Temperature (°C) | | | 21 | | Liquid Depth (mm) | | | | 150 | |
| Date | 2004-11-23 | | 2004-11-24 | | 2004-11-24 | | 200411-25 | | 200411-25 | |
| Tissue | 835MHz Brain | | 835MHz Brain | | 1900MHz Brain | | 835MHz Muscle | | 1880MHz Muscle | |
| | Target | Measured | Target | Measured | Target | Measured | Target | Measured | Target | Measured |
| Dielectric Constant: ε | 41.5 | 42.5 | 41.5 | 42.5 | 40 | 38.8 | 55.2 | 55.02 | 53.3 | 50.9 |
| Conductivity: σ | 0.9 | 0.874 | 0.9 | 0.873 | 1.4 | 1.46 | 0.97 | 0.9628 | 1.52 | 1.554 |
| Deviation (%) | ε : 2.4<br>σ : -2.8 | | ε : 2.4<br>σ : -3 | | ε : -3<br>σ : 4.3 | | ε : -0.3<br>σ : -0.7 | | ε : -4.5<br>σ : 2.2 | |

## Test System Validation

Prior to assessment, the system is verified to the ±10% of the specifications at 835MHz (Graphic Plots Attached)

Table 8.2 System Validation [5]

| SYSTEM DIPOLE VALIDATION TARGET & MEASURED | | | | | |
|---|---|---|---|---|---|
| Tissue | System Validation Kit: | Targeted SAR1g (mW/g) | Measured SAR1g (mW/g) | Deviation (%) | Test Date |
| 835MHz Brain | D835V2(S/N :475) | 2.42 | 2.52 | 4.1 | 2004-11-23 |
| 835MHz Brain | D835V2(S/N :475) | 2.42 | 2.39 | 1.2 | 2004-11-24 |
| 1900MHz Brai | D1900V2(S/N :5d032) | 10 | 10 | 0 | 2004-11-24 |

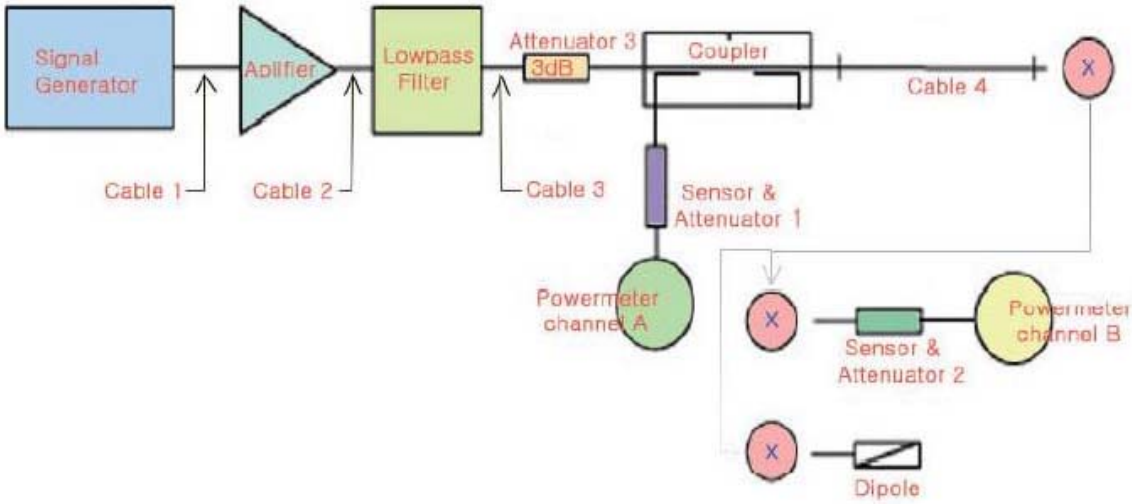


Figure 12.1 Dipole Validation Test Setup

# 9. RESULTS(continued)

Ambient TEMPERATURE (C) : 22.0
Relative HUMIDITY (%) : 32
Mixture Type : 835MHz Brain
Dielectric Constant : 42.5
Conductivity: 0.87

## Measurement Results (AMPS Head SAR-Touch)

| ANSI / IEEE C95.1 1992 - SAFETY LIMIT<br>Spatial Peak<br>Uncontrolled Exposure/General Population | Brain<br>**1.6 W/kg (mW/g)**<br>averaged over 1 gram |
|---|---|

MEASUREMENT RESULTS (AMPS Left Head SAR - Touch)

| Frequency | | Moudulation | Conducted Power(dBm) | | battery | Device Test position | Antenna Position | SAR (W/kg) |
|---|---|---|---|---|---|---|---|---|
| MHz | Ch. | | Begin | End | | | | |
| 824.04 | 991 | AMPS | 27.00 | 26.98 | Standard | Cheek Touch | Fixed | 0.555 |
| 836.49 | 383 | AMPS | 27.00 | 26.95 | Standard | Cheek Touch | Fixed | 1.170 |
| 849.97 | 799 | AMPS | 27.00 | 26.96 | Standard | Cheek Touch | Fixed | 0.692 |

MEASUREMENT RESULTS (AMPS Right Head SAR - Touch)

| Frequency | | Moudulation | Conducted Power(dBm) | | battery | Device Test position | Antenna Position | SAR (W/kg) |
|---|---|---|---|---|---|---|---|---|
| MHz | Ch. | | Begin | End | | | | |
| 824.04 | 991 | AMPS | 27.00 | 27.00 | Standard | Cheek Touch | Fixed | 0.494 |
| 836.49 | 383 | AMPS | 27.00 | 26.98 | Standard | Cheek Touch | Fixed | 1.140 |
| 849.97 | 799 | AMPS | 27.00 | 26.94 | Standard | Cheek Touch | Fixed | 0.665 |

NOTES:
1. The test data reported are the worst-case SAR value with the antenna-head position set in a typical configuration.
2. All modes of operation were investigated and the worst-case are reported.
3. Battery Type : Standard
Radiated measurements indicate that the Extended-life battery produces lower ERP and EIRP, therefore the Standard-life battery is used in SAR testing.
4. Power Measured : Conducted
5. SAR Measurement System : SPEAG
6. SAR Configuration : Head

Engineer M.J.Song
(Signature)

# 9. RESULTS(continued)

Ambient TEMPERATURE (C) : 23.0
Relative HUMIDITY (%) : 32
Mixture Type : 835MHz Brain
Dielectric Constant : 42.5
Conductivity: 0.87

## Measurement Results (AMPS Head SAR-Tilt)

| ANSI / IEEE C95.1 1992 - SAFETY LIMIT<br>Spatial Peak<br>Uncontrolled Exposure/General Population | Brain<br>1.6 W/kg (mW/g)<br>averaged over 1 gram |
|---|---|

| MEASUREMENT RESULTS (AMPS Left Head SAR - Tlit) | | | | | | | | |
|---|---|---|---|---|---|---|---|---|
| Frequency | | Moudulation | Conducted Power(dBm) | | battery | Device Test position | Antenna Position | SAR (W/kg) |
| MHz | Ch. | | Begin | End | | | | |
| 836.49 | 383 | AMPS | 27.00 | 26.92 | Standard | Cheek Touch | Fixed | 0.410 |

| MEASUREMENT RESULTS (AMPS Right Head SAR - Tilt) | | | | | | | | |
|---|---|---|---|---|---|---|---|---|
| Frequency | | Moudulation | Conducted Power(dBm) | | battery | Device Test position | Antenna Position | SAR (W/kg) |
| MHz | Ch. | | Begin | End | | | | |
| 836.49 | 383 | AMPS | 27.00 | 26.93 | Standard | Cheek Touch | Fixed | 0.343 |

NOTES:
1. The test data reported are the worst-case SAR value with the antenna-head position set in a typical configuration.
2. All modes of operation were investigated and the worst-case are reported.
3. Battery Type : Standard
Radiated measurements indicate that the Extended-life battery produces lower ERP and EIRP, therefore the Standard-life battery is used in SAR testing.
4. Power Measured : Conducted
5. SAR Measurement System : SPEAG
6. SAR Configuration : Head

Engineer M.J.Song
(Signature)

# 9. RESULTS(continued)

Ambient TEMPERATURE (C) : 23
Relative HUMIDITY (%) : 32
Mixture Type : 835MHz Body
Dielectric Constant : 55.02
Conductivity: 0.96

## Measurement Results (AMPS BODY SAR w/o Holster)

| | |
|---|---|
| ANSI / IEEE C95.1 1992 - SAFETY LIMIT<br>Spatial Peak<br>Uncontrolled Exposure/General Population | Muscle<br>1.6 W/kg (mW/g)<br>averaged over 1 gram |

MEASUREMENT RESULTS (AMPS Body SAR Without Holster)

| Frequency | | Moudulation | Conducted Power(dBm) | | battery | Device Test position | Antenna Position | SAR (W/kg) |
|---|---|---|---|---|---|---|---|---|
| MHz | Ch. | | Begin | End | | | | |
| 824.04 | 991 | AMPS | 27.00 | 27.00 | Standard | Cheek Touch | Fixed | 0.326 |
| 836.49 | 383 | AMPS | 27.00 | 26.95 | Standard | Cheek Touch | Fixed | 0.687 |
| 849.97 | 799 | AMPS | 27.00 | 27.00 | Standard | Cheek Touch | Fixed | 0.508 |

NOTES:
1. The test data reported are the worst-case SAR value with the antenna-head position set in a typical configuration.
2. All modes of operation were investigated and the worst-case are reported.
3. Battery Type : Standard
Radiated measurements indicate that the Extended-life battery produces lower ERP and EIRP, therefore the Standard-life battery is used in SAR testing.
4. Power Measured : Conducted
5. SAR Measurement System : SPEAG
6. SAR Configuration : Head

Engineer M.J.Song
(Signature)

# 9. RESULTS(continued)

Ambient TEMPERATURE (C) : 22
Relative HUMIDITY (%) : 32
Mixture Type : 835MHz Brain
Dielectric Constant : 42.5
Conductivity: 0.87

## Measurement Results (CDMA Head SAR-Touch)

| ANSI / IEEE C95.1 1992 - SAFETY LIMIT<br>Spatial Peak<br>Uncontrolled Exposure/General Population | Brain<br>1.6 W/kg (mW/g)<br>averaged over 1 gram |
|---|---|

MEASUREMENT RESULTS (CDMA Left Head SAR - Touch)

| Frequency | | Moudulation | Conducted Power(dBm) | | battery | Device Test position | Antenna Position | SAR (W/kg) |
|---|---|---|---|---|---|---|---|---|
| MHz | Ch. | | Begin | End | | | | |
| 824.7 | 1013 | CDMA | 24.00 | 23.92 | Standard | Cheek Touch | Fixed | 0.262 |
| 835.89 | 363 | CDMA | 24.00 | 23.95 | Standard | Cheek Touch | Fixed | 0.583 |
| 848.31 | 777 | CDMA | 24.00 | 23.95 | Standard | Cheek Touch | Fixed | 0.343 |

MEASUREMENT RESULTS (CDMA Right Head SAR - Touch)

| Frequency | | Moudulation | Conducted Power(dBm) | | battery | Device Test position | Antenna Position | SAR (W/kg) |
|---|---|---|---|---|---|---|---|---|
| MHz | Ch. | | Begin | End | | | | |
| 824.04 | 1013 | CDMA | 24.00 | 23.96 | Standard | Cheek Touch | Fixed | 0.283 |
| 836.49 | 363 | CDMA | 24.00 | 23.97 | Standard | Cheek Touch | Fixed | 0.561 |
| 849.97 | 777 | CDMA | 24.00 | 23.91 | Standard | Cheek Touch | Fixed | 0.329 |

NOTES:
1. The test data reported are the worst-case SAR value with the antenna-head position set in a typical configuration.
2. All modes of operation were investigated and the worst-case are reported.
3. Battery Type : Standard
Radiated measurements indicate that the Extended-life battery produces lower ERP and EIRP, therefore the Standard-life battery is used in SAR testing.
4. Power Measured : Conducted
5. SAR Measurement System : SPEAG
6. SAR Configuration : Head

Engineer M.J.Song
(Signature)

# 9. RESULTS(continued)

Ambient TEMPERATURE (C) : 23
Relative HUMIDITY (%) : 32
Mixture Type : 835MHz Brain
Dielectric Constant : 42.5
Conductivity: 0.87

## Measurement Results (CDMA Head SAR-Tilt)

| ANSI / IEEE C95.1 1992 - SAFETY LIMIT<br>Spatial Peak<br>Uncontrolled Exposure/General Population | Brain<br>1.6 W/kg (mW/g)<br>averaged over 1 gram |
|---|---|

| MEASUREMENT RESULTS (CDMA Left Head SAR - Tlit) | | | | | | | | |
|---|---|---|---|---|---|---|---|---|
| Frequency | | Moudulation | Conducted Power(dBm) | | battery | Device Test position | Antenna Position | SAR (W/kg) |
| MHz | Ch. | | Begin | End | | | | |
| 835.89 | 363 | CDMA | 24.00 | 23.92 | Standard | Cheek Touch | Fixed | 0.159 |

| MEASUREMENT RESULTS (CDMA Right Head SAR - Tilt) | | | | | | | | |
|---|---|---|---|---|---|---|---|---|
| Frequency | | Moudulation | Conducted Power(dBm) | | battery | Device Test position | Antenna Position | SAR (W/kg) |
| MHz | Ch. | | Begin | End | | | | |
| 835.89 | 363 | CDMA | 24.00 | 23.91 | Standard | Cheek Touch | Fixed | 0.162 |

NOTES:
1. The test data reported are the worst-case SAR value with the antenna-head position set in a typical configuration.
2. All modes of operation were investigated and the worst-case are reported.
3. Battery Type : Standard
Radiated measurements indicate that the Extended-life battery produces lower ERP and EIRP, therefore the Standard-life battery is used in SAR testing.
4. Power Measured : Conducted
5. SAR Measurement System : SPEAG
6. SAR Configuration : Head

Engineer M.J.Song
(Signature)

# 9. RESULTS(continued)

Ambient TEMPERATURE (C) : 23
Relative HUMIDITY (%) : 32
Mixture Type : 835MHz Body
Dielectric Constant : 55.02
Conductivity: 0.96

## Measurement Results (CDMA BODY SAR w/o Holster)

| ANSI / IEEE C95.1 1992 - SAFETY LIMIT<br>Spatial Peak<br>Uncontrolled Exposure/General Population | Muscle<br>1.6 W/kg (mW/g)<br>averaged over 1 gram |
|---|---|

MEASUREMENT RESULTS (CDMA Body SAR Without Holster)

| Frequency | | Moudulation | Conducted Power(dBm) | | battery | Device Test position | Antenna Position | SAR (W/kg) |
|---|---|---|---|---|---|---|---|---|
| MHz | Ch. | | Begin | End | | | | |
| 824.7 | 1013 | CDMA | 24.00 | 24.00 | Standard | Cheek Touch | Fixed | 0.156 |
| 835.89 | 363 | CDMA | 24.00 | 23.90 | Standard | Cheek Touch | Fixed | 0.347 |
| 848.31 | 777 | CDMA | 24.00 | 24.00 | Standard | Cheek Touch | Fixed | 0.216 |

NOTES:
1. The test data reported are the worst-case SAR value with the antenna-head position set in a typical configuration.
2. All modes of operation were investigated and the worst-case are reported.
3. Battery Type : Standard
Radiated measurements indicate that the Extended-life battery produces lower ERP and EIRP, therefore the Standard-life battery is used in SAR testing.
4. Power Measured : Conducted
5. SAR Measurement System : SPEAG
6. SAR Configuration : Head

Engineer M.J.Song
(Signature)

# 9. RESULTS(continued)

Ambient TEMPERATURE (C) : 23
Relative HUMIDITY (%) : 32
Mixture Type : 1800MHz Brain
Dielectric Constant : 39.2
Conductivity: 1.36

## Measurement Results (PCS Head SAR-Touch)

| ANSI / IEEE C95.1 1992 - SAFETY LIMIT<br>Spatial Peak<br>Uncontrolled Exposure/General Population | Brain<br>**1.6 W/kg (mW/g)**<br>averaged over 1 gram |
|---|---|

MEASUREMENT RESULTS (PCS Left Head SAR - Touch)

| Frequency | | Moudulation | Conducted Power(dBm) | | battery | Device Test position | Antenna Position | SAR (W/kg) |
|---|---|---|---|---|---|---|---|---|
| MHz | Ch. | | Begin | End | | | | |
| 1851.25 | 25 | PCS | 24.00 | 23.98 | Standard | Cheek Touch | Fixed | 1.160 |
| 1880 | 600 | PCS | 24.00 | 23.97 | Standard | Cheek Touch | Fixed | 1.020 |
| 1908.75 | 1175 | PCS | 24.00 | 23.96 | Standard | Cheek Touch | Fixed | 1.270 |

MEASUREMENT RESULTS (PCS Right Head SAR - Touch)

| Frequency | | Moudulation | Conducted Power(dBm) | | battery | Device Test position | Antenna Position | SAR (W/kg) |
|---|---|---|---|---|---|---|---|---|
| MHz | Ch. | | Begin | End | | | | |
| 1851.25 | 991 | PCS | 24.00 | 24.00 | Standard | Cheek Touch | Fixed | 0.828 |
| 1880 | 383 | PCS | 24.00 | 24.00 | Standard | Cheek Touch | Fixed | 0.613 |
| 1908.75 | 799 | PCS | 24.00 | 23.98 | Standard | Cheek Touch | Fixed | 0.795 |

NOTES:
1. The test data reported are the worst-case SAR value with the antenna-head position set in a typical configuration.
2. All modes of operation were investigated and the worst-case are reported.
3. Battery Type : Standard
Radiated measurements indicate that the Extended-life battery produces lower ERP and EIRP, therefore the Standard-life battery is used in SAR testing.
4. Power Measured : Conducted
5. SAR Measurement System : SPEAG
6. SAR Configuration : Head

Engineer M.J.Song
(Signature)

# 9. RESULTS(continued)

Ambient TEMPERATURE (C) : 23
Relative HUMIDITY (%) : 32
Mixture Type : 1800MHz Brain
Dielectric Constant : 39.2
Conductivity: 1.36

## Measurement Results (PCS Head SAR-Tilt)

| ANSI / IEEE C95.1 1992 - SAFETY LIMIT<br>Spatial Peak<br>Uncontrolled Exposure/General Population | Brain<br>**1.6 W/kg (mW/g)**<br>averaged over 1 gram |
|---|---|

| MEASUREMENT RESULTS (PCS Left Head SAR - Tlit) | | | | | | | | |
|---|---|---|---|---|---|---|---|---|
| Frequency | | Moudulation | Conducted Power(dBm) | | battery | Device Test position | Antenna Position | SAR (W/kg) |
| MHz | Ch. | | Begin | End | | | | |
| 1908.75 | 1175 | PCS | 24.00 | 23.98 | Standard | Cheek Touch | Fixed | 0.154 |

| MEASUREMENT RESULTS (AMPS Right Head SAR - Tilt) | | | | | | | | |
|---|---|---|---|---|---|---|---|---|
| Frequency | | Moudulation | Conducted Power(dBm) | | battery | Device Test position | Antenna Position | SAR (W/kg) |
| MHz | Ch. | | Begin | End | | | | |
| 1908.75 | 1175 | PCS | 24.00 | 24.00 | Standard | Cheek Touch | Fixed | 0.114 |

NOTES:
1. The test data reported are the worst-case SAR value with the antenna-head position set in a typical configuration.
2. All modes of operation were investigated and the worst-case are reported.
3. Battery Type : Standard
Radiated measurements indicate that the Extended-life battery produces lower ERP and EIRP, therefore the Standard-life battery is used in SAR testing.
4. Power Measured : Conducted
5. SAR Measurement System : SPEAG
6. SAR Configuration : Head

Engineer M.J.Song
(Signature)

# 9. RESULTS(continued)

Ambient TEMPERATURE (C) : 23
Relative HUMIDITY (%) : 32
Mixture Type : 1800MHz Brain
Dielectric Constant : 50.9
Conductivity: 1.55

## Measurement Results (PCS BODY SAR w/o Holster)

| | |
|---|---|
| ANSI / IEEE C95.1 1992 – SAFETY LIMIT<br>Spatial Peak<br>Uncontrolled Exposure/General Population | Muscle<br>1.6 W/kg (mW/g)<br>averaged over 1 gram |

MEASUREMENT RESULTS (PCS Body SAR Without Holster)

| Frequency | | Moudulation | Conducted Power(dBm) | | battery | Device Test position | Antenna Position | SAR (W/kg) |
|---|---|---|---|---|---|---|---|---|
| MHz | Ch. | | Begin | End | | | | |
| 1851.25 | 25 | PCS | 24.00 | 23.98 | Standard | Cheek Touch | Fixed | 0.894 |
| 1880 | 600 | PCS | 24.00 | 23.97 | Standard | Cheek Touch | Fixed | 0.458 |
| 1908.75 | 1175 | PCS | 24.00 | 23.96 | Standard | Cheek Touch | Fixed | 0.410 |

NOTES:
1. The test data reported are the worst-case SAR value with the antenna-head position set in a typical configuration.
2. All modes of operation were investigated and the worst-case are reported.
3. Battery Type : Standard
Radiated measurements indicate that the Extended-life battery produces lower ERP and EIRP, therefore the Standard-life battery is used in SAR testing.
4. Power Measured : Conducted
5. SAR Measurement System : SPEAG
6. SAR Configuration : Head

Engineer M.J.Song
(Signature)

# 10. REFERENCE

[1] Federal Communications Commission, ET Docket 93-62, Guidelines for Evaluating the Environmental Effects of Radio Frequency Radiation, Aug. 1996.

[2] ANSI/IEEE C95.1 - 1991, American National Standard safety levels with respect to human exposure to radio frequency electromagnetic fields, 300kHz to 100GHz, New York: IEEE, Aug. 1992

[3] ANSI/IEEE C95.3 - 1991, IEEE Recommended Practice for the Measurement of Potentially Hazardous Electromagnetic Fields - RF and Microwave, New York: IEEE, 1992.

[4] NCRP, National Council on Radiation Protection and Measurements, Biological Effects and Exposure Criteria for Radio Frequency Electromagnetic Fields, NCRP Report No. 86, 1986. Reprinted Feb. 1995.

[5] T. Schmid, O. Egger, N. Kuster, Automated E-field scanning system for dosimetric assessments, IEEE Transaction on Microwave Theory and Techniques, vol. 44, Jan. 1996, pp. 105-113.

[6] K. Pokovic, T. Schmid, N. Kuster, Robust setup for precise calibration of E-field probes in tissue simulating liquids at mobile communications frequencies, ICECOM97, Oct. 1997, pp. 120-124.

[7]K. Pokovi æ , T. Schmid, and N. Kuster, E-field Probe with improved isotropy in brain simulating liquids, Proceedings of the ELMAR, Zadar, Croatia, June 23-25, 1996, pp. 172-175.

[8] Schmid & Partner Engineering AG, Application Note: Data Storage and Evaluation, June 1998, p2.

[9] V. Hombach, K. Meier, M. Burkhardt, E. Kuhn, N. Kuster, The Dependence of EM Energy Absorption upon Human Head Modeling at 900 MHz, IEEE Transaction on Microwave Theory and Techniques, vol. 44 no. 10, Oct. 1996, pp. 1865-1873.

[10] N. Kuster and Q. Balzano, Energy absorption mechanism by biological bodies in the near field of dipole antennas above 300MHz, IEEE Transaction on Vehicular Technology, vol. 41, no. 1, Feb. 1992, pp. 17-23.

[11] G. Hartsgrove, A. Kraszewski, A. Surowiec, Simulated Biological Materials for Electromagnetic Radiation Absorption Studies, University of Ottawa, Bioelectromagnetics, Canada: 1987, pp. 29-36.

[12] Q. Balzano, O. Garay, T. Manning Jr., Electromagnetic Energy Exposure of Simulated Users of Portable Cellular Telephones, IEEE Transactions on Vehicular Technology, vol. 44, no.3, Aug. 1995.

[13] W. Gander, Computermathematick, Birkhaeuser, Basel, 1992.

[14] W.H. Press, S.A. Teukolsky, W.T. Vetterling, and B.P. Flannery, Numerical Recepies in C, The Art of Scientific Computing, Second edition, Cambridge University Press, 1992.

[15] Federal Communications Commission, OET Bulletin 65, Evaluating Compliance with FCC Guidelines for Human Exposure to RadioFrequency Electromagnetic Fields. Supplement C, Dec. 1997.

[16] N. Kuster, R. Kastle, T. Schmid, Dosimetric evaluation of mobile communications equipment with known precision, IEEE Transaction on Communications, vol. E80-B, no. 5, May 1997, pp. 645-652.

[17] CENELEC CLC/SC111B, European Prestandard (prENV 50166-2), Human Exposure to Electromagnetic Fields High-frequency: 10kHz-300GHz, Jan. 1995.

[18] Prof. Dr. Niels Kuster, ETH, Eidgen o ssische Technische Hoschschule Z u rich, Dosimetric Evaluation of the Cellular Phone.

# APPENDIX A : Validation Test Data

835MHz Dipole Validation