Compliance Test Report for FCC

Report Number		ESTF150410-003		
Applicant	Company name	LG Electronics USA		
	Address	2000 Millbrook Dr Lincolnshire, IL 60069 United states		
	Telephone	847-941-8373		
Product	Product name	Personal Computer		
	Model No.	CG,DG,DM	Manufacturer	LG Electronics Inc.
	Serial No.	NONE	Country of origin	KOREA
Test date	2004-10-01~2004-10-11		Date of issue	2004-10-11
Testing location	ESTECH. Co., Ltd. 97-1 Hoiuk-Ri Majang-Myon, Icheon-city, KyungKi-Do, Korea			
Standard	FCC PART 15 2002 , ANSI C 63.4 2001			
Test item	■ Conducted Emission	☐ Class A	■ Class B	Test result OK
	■ Radiated Emission	☐ Class A	■ Class B	Test result OK
Measurement facility registration number		94696		
Tested by	Senior Engineer J.M. Yang		(Signature)	
Reviewed by	Director T.K. Lee		(Signature)	
Abbreviation	OK, Pass = Passed, Fail = Failed, N/A = not applicable			

* Note

- This test report is not permitted to copy partly without our permission
- This test result is dependent on only equipment to be used
- This test result based on a single evaluation of one sample of the above mentioned
- DG,DM are same product. ONLY Model name is different

Contents

1. Laboratory Information ····· 3

2. Description of EUT ····· 4

3. Test Standards ····· 5

4. Measurement condition ····· 6

5. Measurement of radiated emission ····· 8

5.1 Measurement equipment ····· 8

5.2 Environmental conditions ····· 8

5.3 Test data ····· 9

6. Measurement of conducted emission ····· 10

6.1 Measurement equipment ····· 10

6.2 Environmental conditions ····· 10

6.3 Test data ····· 11

7. Photographs of test setup ····· 12

8. Photographs of EUT ····· 14

Appendix 1. Spectral diagram

Appendix 2. Phorographs of EUT in side PCB

Appendix 3. Block diagram of EUT

Appendix 4. Circuit Diagram

1. Laboratory Information

1.1 General

This EUT (Equipment Under Test) has been shown to be capable of compliance with the applicable technical standards and is tested in accordance with the measurement procedures as indicated in this report.
ESTECH Lab attests to accuracy of test data. All measurement reported herein were performed by ESTECH Co., Ltd.
ESTECH Lab assume full responsibility for the completeness of these measurements and vouch for the qualifications of all persons taking them.

1.2 Test Lab.

Corporation Name : ESTECH Co. Ltd

Head Office : 3 rd Fl., Chungdam Bldg., 119-1 Chungdam-dong Kangnam-gu , Seoul, Korea
(Safety & Telecom. Test Lab)

EMC Test Lab : 58-1 Osan-Ri, GaNam-Myon, YeoJoo-Gun, KyungKi-Do, Korea
97-1 Hoiuk-Ri Majang-Myon, Icheon-city, KyungKi-Do, Korea

1.3 Official Qualification(s)

MIC : Granted Accreditation from Ministry of Information & Communication for EMC, Safety and Telecommunication

KOLAS : Accredited Lab By Korea Laboratory Accreditation Schema base on CENELEC requirements

FCC : Filed Laboratory at Federal Communications Commission

VCCI : Granted Accreditation from Voluntary Control Council for Interference from ITE

2. Description of EUT

2.1 Summary of Equipment Under Test

Product : Personal Computer

Model Number : CG,DG,DM

Serial Number : NONE

Manufacturer : LG Electronics Inc.

Country of origin : KOREA

Rating : AC120V ,60Hz

Receipt Date : 2004-10-01

2.2 General descriptions of EUT

CPU : Pentium 4 3.0Ghz FSB 800Mhz
OSC FREQ.:14M/25M/24.576M
I/O Port : PCI : 3, AGP : 1, Parallel : 1, Serial : 1, VGA : 1, PS/2 Keyboard : 1, PS/2 Mouse : 1,
10/100 Base TX :1, USB : 6, Mic : 2, Speaker : 1, Headphone : 1, Line - in : 1
Memory : Min 256MB & Max 2GB
CD-RW / DVD-ROM Drive : 42X / 16X / 8X / 4X
HDD : 80GB
POWER SUPPLY : MAX 250W AC 100V-127Vac (50/60Hz),5A
AC 200V-240Vac (50/60Hz),3A

2.3 Change Item

Before change	After change
HDD:120GB	HDD:80GB
CPU:P4 3.4G	CPU:P4 3.0G
Power Supply:MAX 220W	Power Supply:MAX 250W

3. Test Standards

Test Standard : FCC PART 15 (2002)

This Standard sets out the regulations under which an intentional, unintentional, or incidental radiator may be operated without an individual license. It also contains the technical specifications, administrative requirements and other conditions relating to the marketing of Part 15 devices.

Test Method : ANSI C 63.4 (2001)

This standard sets forth uniform methods of measurement of radio-frequency (RF) signals and noise emitted from both unintentional and intentional emitters of RF energy in the frequency range 9 kHz to 40 GHz. Methods for the measurement of radiated and AC power-line conducted radio noise are covered and may be applied to any such equipment unless otherwise specified by individual equipment requirements. These methods cover measurement of certain decides that deliberately radiate energy, such as intentional emitters, but does not cover licensed transmitters. This standard is not intended for certification/approval of avionic equipment or for industrial, scientific, and medical (ISM) equipment These method apply to the measurement of individual units or systems comprised of multiple units

4. Measurement Condition

4.1 EUT Operation.

* The EUT was in the following operation mode during all testing
* The operational conditions of the EUT was determined by the manufacturer according to the typical use of the EUT with respect to the expected hightest level of emission
* We tested EUT under continuous displaying "H" character by monitor;printer;etc.

4.2 Configuration and Peripherals

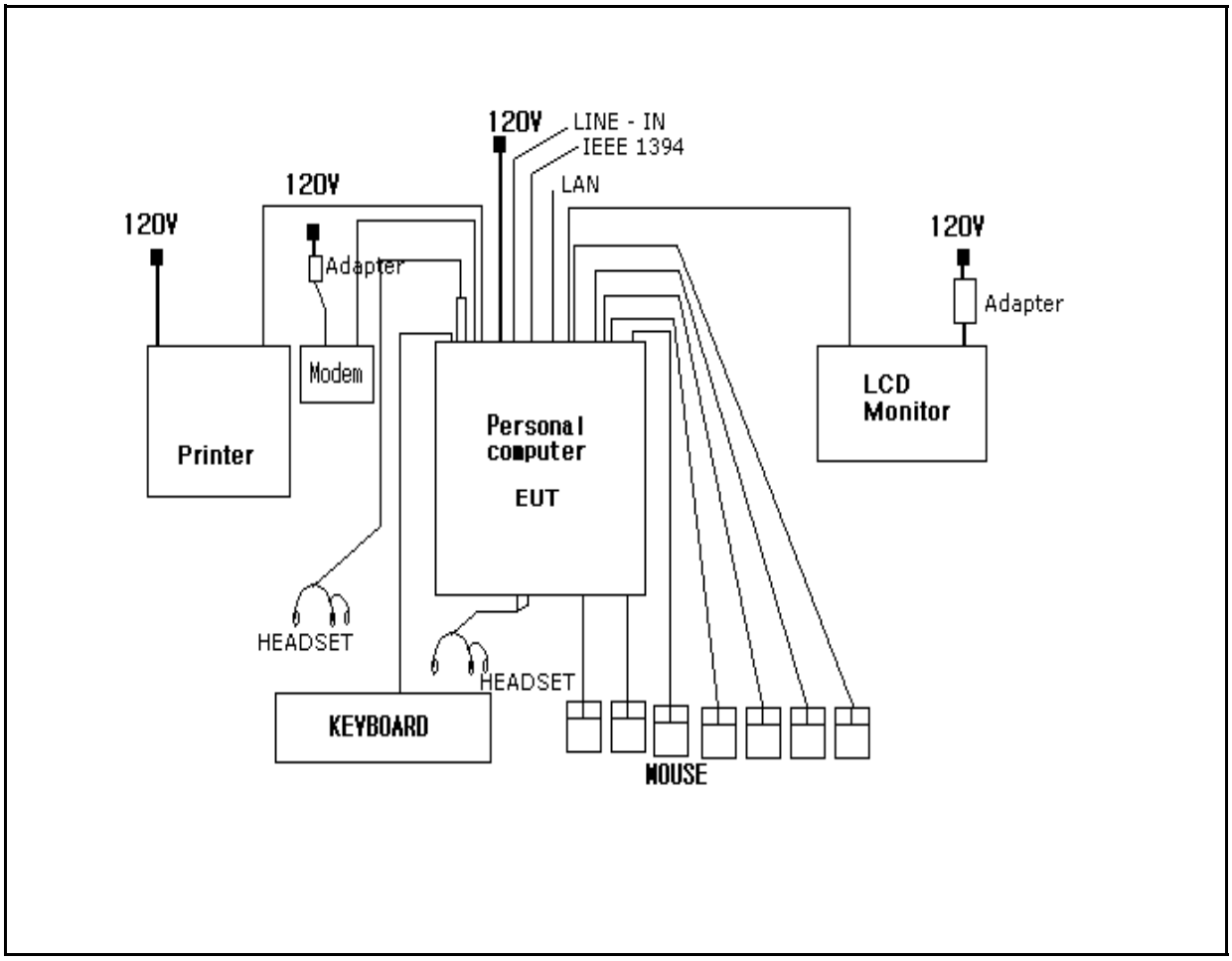

4.3 EUT and Support equipment

Equipment Name	Model Name	S/N	Manufacturer	Remark (FCC ID)
Personal Computer	CG, DG,DM	NONE	LG Electronics Inc.	EUT
Lcd Monitor	KD17NS	N433N4KX300852K	Samsung Electronics Co., Ltd.,	-
Adapter	AP04914-UV	0401011616AC	Anam	-
Printer	LG-570H+	B1021095782	Trigem	-
Headset	CDM-3MV	NONE	Tsound	-
Headset	CD-6MV	NONE	Hi Sonic	-
Keyboard	SEM-DT35	32006657	Samsung Electro-mechanics	-
Mouse	M-S48a	HCA31409057	Logitech	-
Mouse	M-U48a	4881A177	Logitech	-
Mouse	M-BE58	LZE11103398	Logitech	-
Mouse	M-BJ58	LNA21702606	Logitech	-
Mouse	X08-70400	0154227	Microsoft Corporation	-
Mouse	X08-70400	0154263	Microsoft Corporation	-
Mouse	X08-70400	0154202	Microsoft Corporation	-
Modem	5630	335630-01	3COM Corporation	-
Adapter	J41091000A010G	NONE	Good Power ELECTRONICS	-

4.4 Cable Connecting

Start Equipment		End Equipment		Cable Standard		Remark
Name	I/O port	Name	I/O port	Length	Shielded	
Personal Computer	Video	Lcd Monitor	Video	2.0	Y	-
Personal Computer	PS/2 Keyboard	Keyboard	PS/2 Keyboard	2.0	N	-
Personal Computer	Speaker	Headset	-	2.0	N	-
Personal Computer	Speaker	Headset	-	2.0	N	-
Personal Computer	Mic	Headset	-	2.0	N	-
Personal Computer	Mic	Headset	-	2.0	N	-
Personal Computer	LINE IN	-	-	2.0	N	-
Personal Computer	10/100 Base TX	External Network	10/100 Base TX	20.0	N	-
Personal Computer	Parallel	Printer	Parallel	2.0	Y	-
Personal Computer	IEEE 1394	-	IEEE 1394	2.0	Y	-
Personal Computer	USB	Mouse	USB	2.0	N	-
Personal Computer	USB	Mouse	USB	2.0	N	-
Personal Computer	USB	Mouse	USB	2.0	N	-
Personal Computer	USB	Mouse	USB	2.0	N	-
Personal Computer	USB	Mouse	USB	2.0	N	-
Personal Computer	USB	Mouse	USB	2.0	N	-
Personal Computer	USB	Mouse	USB	2.0	N	-
Personal Computer	Serial	Modem	Serial	2.0	N	-
Lcd Monitor	Power	Adapter	-	2.0	N	-
Modem	Power	Adapter	-	2.0	N	-

5. Measurement of radiated disturbance

Above 30 MHz Electric Field strength was measured in accordance with FCC Part 15 (2002) & ANSI C 63.4 (2001). The test setup was made according to FCC Part 15 (2002) & ANSI C 63.4 (2001) on an open test site, which allows a 3m distance measurement. The EUT was placed in the center of wooden turntable. The height of this table was 0.8m. The measurement was conducted with both horizontal and vertical antenna polarization. The turntable has fully rotated. For further description of the configuration refer to the picture of the test set-up.

5.1 Measurement equipments

Equipment Name	Type	Manufacturer	Serial No.	Next Calibration date
Receiver	ESVS10	Rohde & Schwarz	838562/002	2005.1.12
Spectrum Analyzer	R3261B	ADVANTEST	1720302	2005.2.12
Spectrum Analyzer	HP 8563E	HP	3623A05297	2005.2.12
LogBicon Antenna	VULB 9160	S/B	3142	2005.7.06
Horn Antenna	BBHA 9120 D	SCHWARZBECK	352	2006.4.06
Turn Table	2087	EMCO	2129	-
Antenna Mast	2070-01	EMCO	9702-203	-
ANT Mast Controller	2090	EMCO	1535	-
Turn Table Controller	2090	EMCO	1535	-

5.2 Environmental Condition

Test Place : Open site(3m)

Temperature (°C) : 24 ℃

Humidity (%) : 45 %

5.3 Test data

Measurement Distance : 3 m

Frequency (MHz)	Reading (dBμV)	Position (V/H)	Height (m)	Correction Factor		Result Value		
				Ant Factor (dB)	Cable (dB)	Limit (dBμV/m)	Result (dBμV/m)	Margin (dBμV/m)
50.00	22.10	V	1.0	12.57	1.0	40.0	35.70	-4.30
36.22	22.50	V	1.0	12.41	0.9	40.0	35.84	-4.16
81.28	13.40	H	2.5	8.80	1.3	40.0	23.52	-16.48
110.71	16.70	H	2.3	11.08	1.6	43.5	29.38	-14.12
125.01	15.10	H	2.5	12.10	1.7	43.5	28.90	-14.60
150.01	17.60	H	2.0	13.90	1.9	43.5	33.38	-10.12
168.32	23.10	H	1.9	13.95	2.0	43.5	39.07	-4.43
200.00	23.20	H	1.7	10.38	2.2	43.5	35.76	-7.74
221.18	19.30	H	1.4	10.79	2.3	43.5	32.39	-11.11
233.48	21.20	H	1.2	11.32	2.4	46.0	34.88	-11.12
258.05	26.40	H	1.1	12.10	2.4	46.0	40.91	-5.09
300.02	21.60	H	1.0	13.19	2.7	46.0	37.49	-8.51
308.80	25.40	H	1.2	13.38	2.7	46.0	41.52	-4.48
333.19	25.40	H	1.0	13.93	2.8	46.0	42.14	-3.86
341.32	24.30	H	1.0	14.12	2.8	46.0	41.25	-4.75
366.70	23.20	H	1.0	14.54	3.0	46.0	40.77	-5.23
373.82	24.20	H	1.0	14.70	3.0	46.0	41.95	-4.05
406.31	23.10	H	1.0	15.46	3.2	46.0	41.73	-4.27
500.00	11.20	H	1.0	17.06	3.6	46.0	31.81	-14.19
600.04	16.30	H	1.0	19.16	4.0	46.0	39.41	-6.59
700.07	13.20	H	1.0	20.14	4.3	46.0	37.62	-8.38
763.90	16.30	H	1.0	21.44	4.5	46.0	42.22	-3.78
796.40	13.60	H	1.0	21.73	4.7	46.0	40.02	-5.99
1600.63	38.33	H	1.0	24.86	4.6	54.0	37.79	16.21
1999.37	32.50	H	1.0	25.89	6.6	54.0	34.99	19.01
2401.67	32.50	V	1.0	27.62	6.6	54.0	36.89	17.11
Remark	H : Horizontal, V : Vertical *We measuremented Queask Peak mode from 30Mhz to 1000Mhz and measuremented Average mode above 1Ghz. *We cannot found any frequency above 2.5Ghz.							

6. Measurement of conducted disturbance

The continuous disturbance voltage of AC Mains in the frequency from 0.15 to 30 MHz was measured in accordance to FCC Part 15 (2002) & ANSI C 63.4 (2001) The test setup was made according to FCC Part 15 (2002) & ANSI C 63.4 (2001) in a shielded. The EUT was placed on a non-conductive table at least 80 above the ground plan. A grounded vertical reference plane was positioned in a distance of 40cm from the EUT. The distance from the EUT to other metal surfaces was at least 0.8m. The EUT was only earthen by its power cord through the line impedance stabilizing network. The power cord has been bundled to a length of 1.0m.. The test receiver with Quasi Peak detector complies with CISPR 16.

6.1 Measurement equipments

Equipment Name	Type	Manufacturer	Serial No.	Next Calibration date
LISN	ESH3-Z5	Rohde & Schwarz	838979/010	2005. 2. 12
LISN	NNLA8120A	Schwarzbeck	NONE	2005. 2. 12
TEST Receive	ESPI7	Rohde & Schwarz	100185	2005. 8. 20
Pulse Limiter	ESH3Z2	Rohde & Schwarz	NONE	2005. 6. 15

6.2 Environmental Condition

Test Place : Shield Room

Temperature (°C) : 22℃

Humidity (%) : 42 %

6.3 Test data

Frequency (MHz)	Correction Factor		Line (H/N)	Quasi-peak Value			Average Value		
	Lisn (dB)	Cable (dB)		Limit (dBμV)	Reading (dBμV)	Result (dBμV)	Limit (dBμV)	Reading (dBμV)	Result (dBμV)
0.198	0.07	0.0	H	63.69	38.51	38.61	53.69	34.40	34.50
0.202	0.07	0.0	N	63.53	43.29	43.39	53.53	42.02	42.12
0.266	0.07	0.1	N	61.24	43.87	44.02	51.24	42.82	42.97
0.270	0.07	0.1	H	61.12	37.04	37.19	51.12	36.14	36.29
0.330	0.07	0.1	H	59.45	34.72	34.91	49.45	33.61	33.80
0.334	0.07	0.1	N	59.35	38.04	38.23	49.35		
0.406	0.07	0.2	N	57.73	34.97	35.19	47.73	34.39	34.61
0.470	0.07	0.2	N	56.51	36.20	36.46	46.51		
0.538	0.07	0.2	N	56.00	38.50	38.77	46.00	38.31	38.58
0.674	0.08	0.2	N	56.00	36.34	36.62	46.00	35.90	36.18
0.922	0.09	0.2	H	56.00	31.44	31.73	46.00	29.74	30.03
0.926	0.09	0.2	N	56.00	32.79	33.08	46.00		
1.118	0.09	0.2	H	56.00	28.75	29.05	46.00	26.24	26.54
1.126	0.09	0.2	N	56.00	31.71	32.02	46.00		
1.482	0.10	0.2	H	56.00	32.81	33.16	46.00	31.62	31.97
1.518	0.10	0.3	N	56.00	32.29	32.64	46.00	31.15	31.50
1.550	0.10	0.3	N	56.00	33.31	33.67	46.00	30.66	31.02
1.882	0.11	0.3	H	56.00	30.51	30.91	46.00		
2.018	0.11	0.3	H	56.00	27.47	27.88	46.00		
2.310	0.12	0.3	N	56.00	31.63	32.05	46.00		
2.898	0.14	0.3	H	56.00	35.18	35.62	46.00		
2.966	0.14	0.3	N	56.00	34.19	34.63	46.00	33.27	33.71
3.098	0.14	0.3	H	56.00	36.01	36.45	46.00		
4.174	0.18	0.3	H	56.00	29.28	29.76	46.00	28.24	28.72
4.246	0.18	0.3	N	56.00	30.21	30.69	46.00	29.20	29.68
4.554	0.19	0.3	N	56.00	26.36	26.85	46.00		
4.982	0.20	0.3	H	56.00	27.15	27.65	46.00	25.57	26.07
5.546	0.22	0.3	N	60.00	28.08	28.63	50.00	24.76	25.31
6.062	0.24	0.4	H	60.00	29.05	29.65	50.00		
8.254	0.31	0.5	N	60.00	27.82	28.62	50.00		
8.450	0.32	0.5	H	60.00	29.25	30.07	50.00		
9.218	0.34	0.5	N	60.00	30.61	31.50	50.00		
10.450	0.38	0.6	H	60.00	25.72	26.72	50.00	20.61	21.61
10.510	0.39	0.6	N	60.00	23.66	24.67	50.00	17.97	18.98
20.690	0.72	0.8	N	60.00	22.65	24.18	50.00	16.56	18.09
Remark	H : Hot Line, N : Neutral Line								

7. Photographs of test setup

7.1 Setup for Radiated Test : 30 ~ 1000 MHz

[Front]

[Rear]

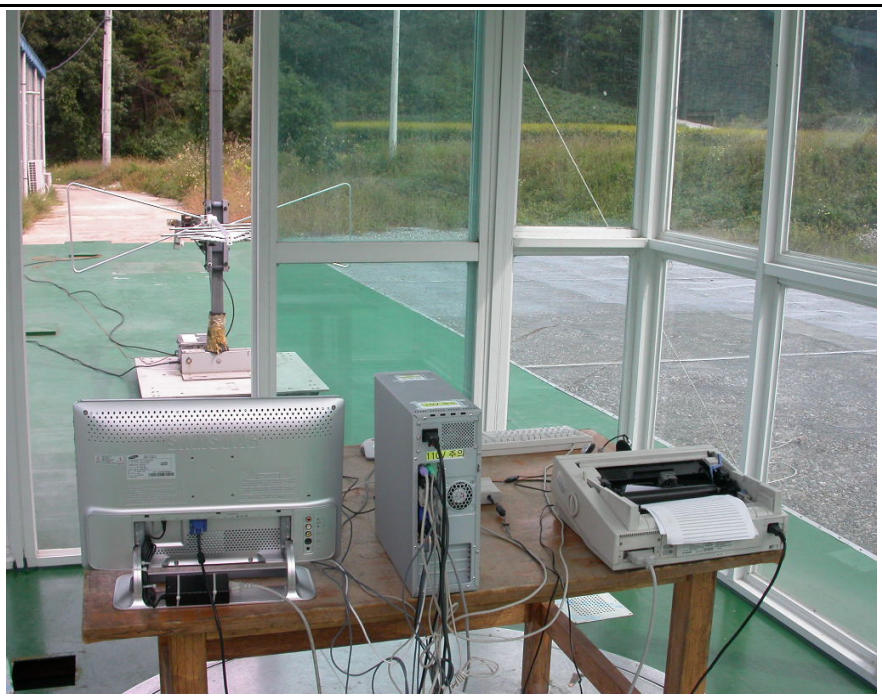

7.2 Setup for Radiated Test : Above1000 MHz

[Front]

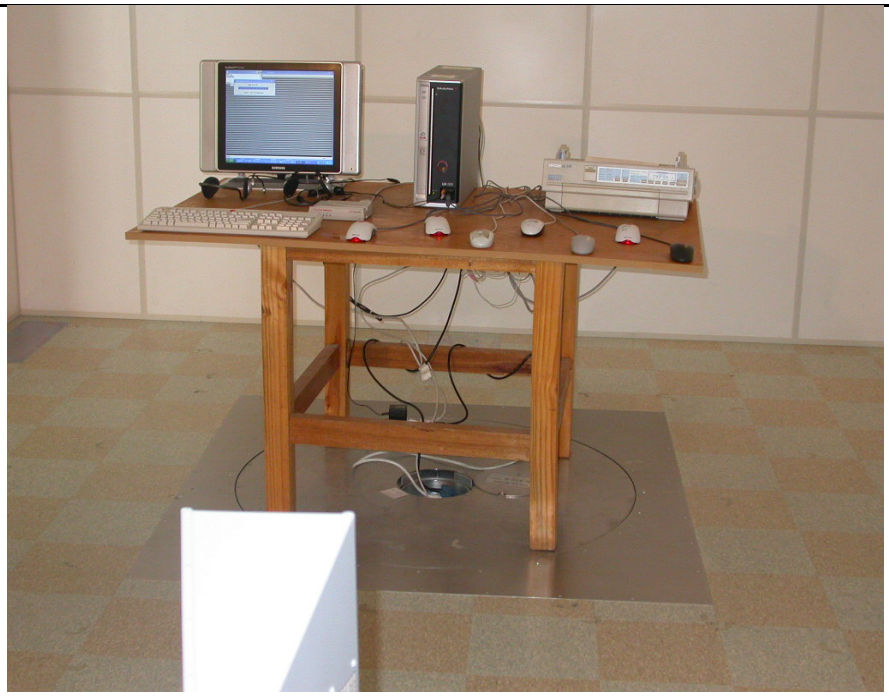

[Rear]

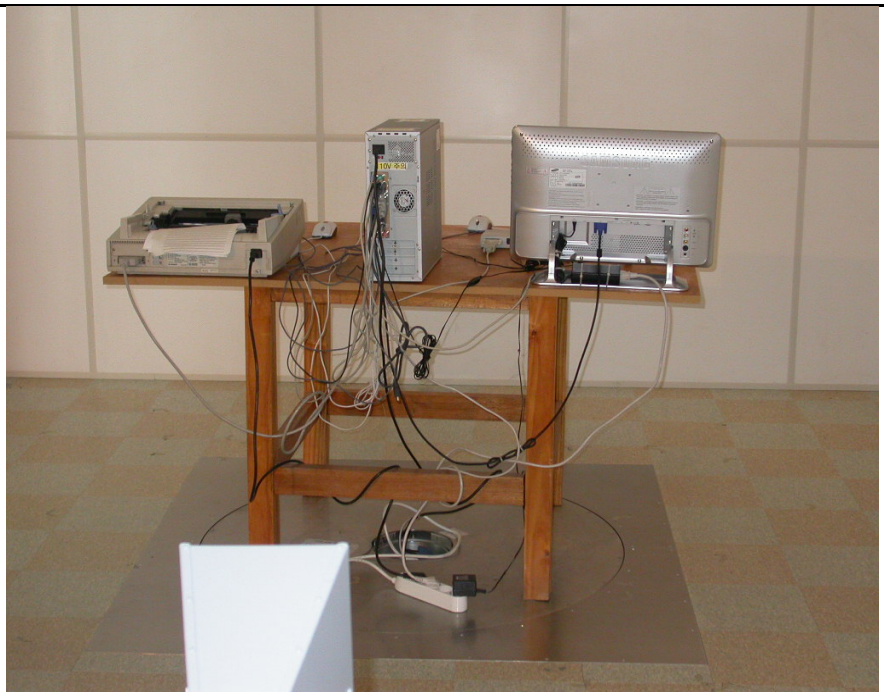

7.2 Setup for Conducted Test : 0.15 ~ 30 MHz

[Front]

[Rear]

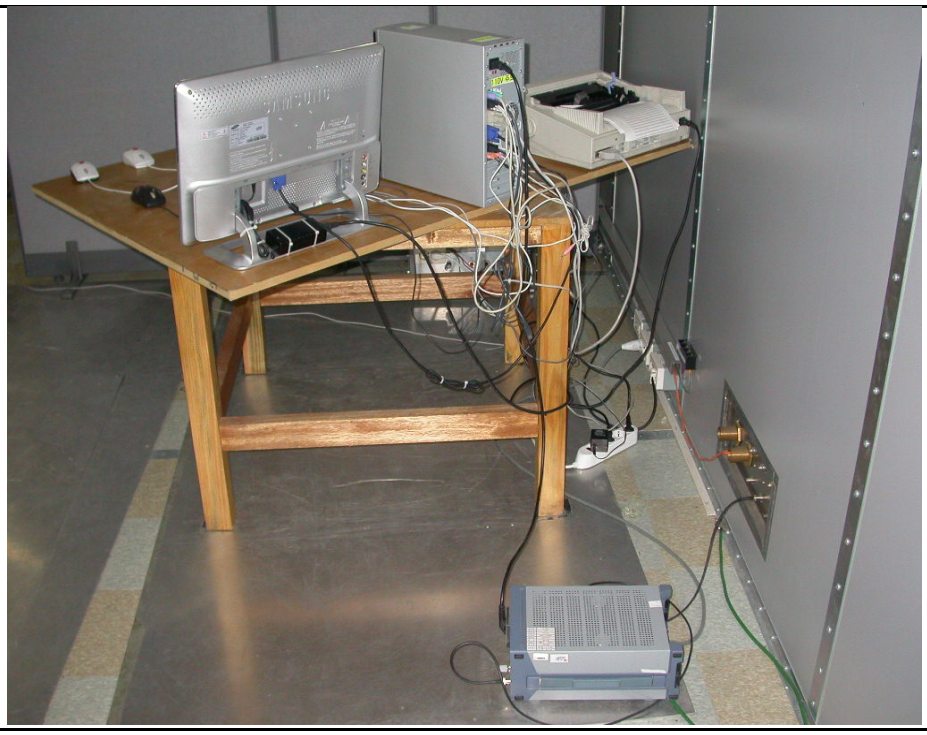

8. Photographs of EUT

[Front]

[Rear]

Appendix 1. Spectral diagram

*HOT

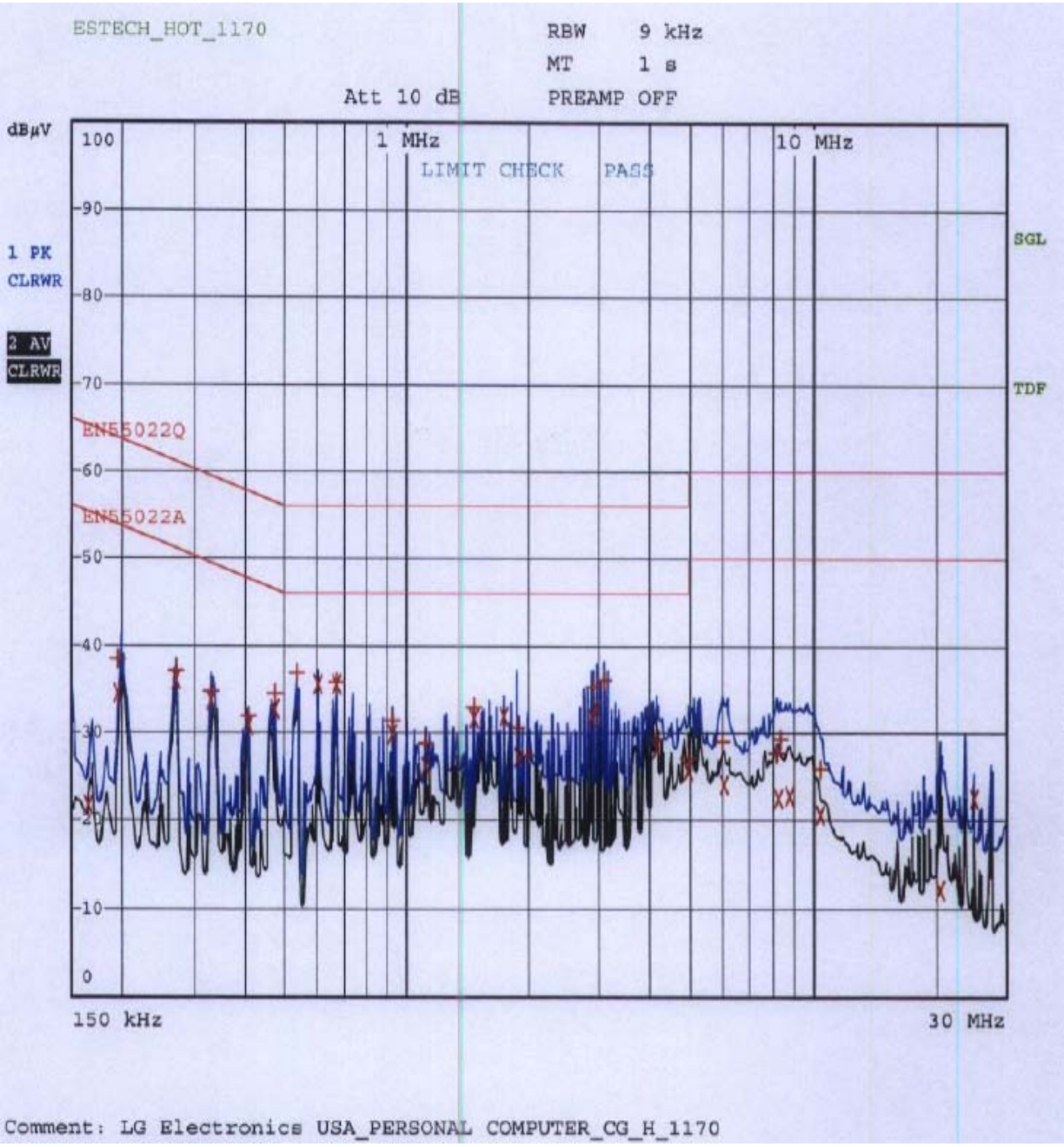

*NETRUL

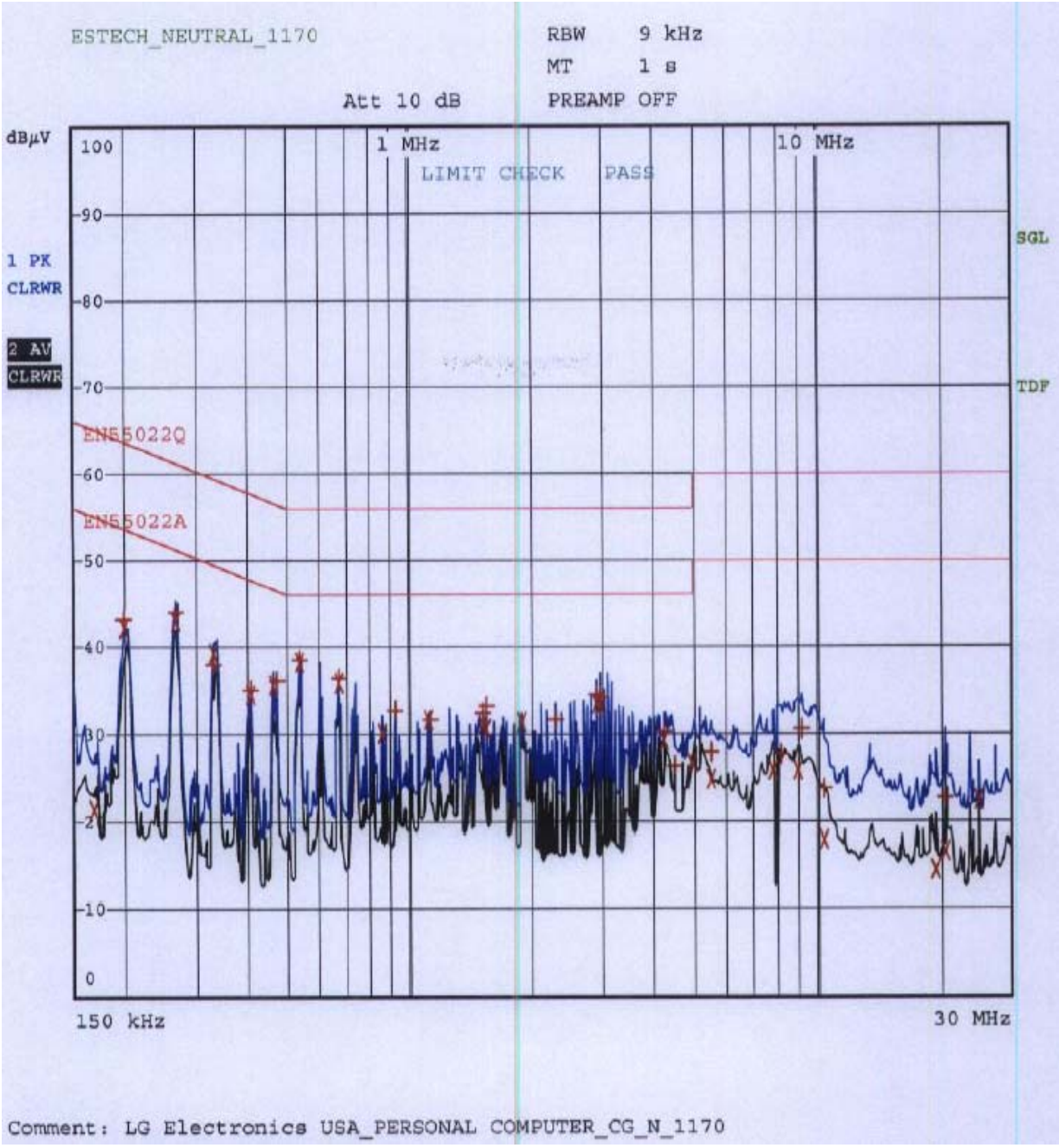
ESTECH_NEUTRAL_1170
RBW 9 kHz
MT 1 s
Att 10 dB
PREAMP OFF
dBµV
1 MHz
10 MHz
LIMIT CHECK PASS
SGL
1 PK
CLRWR
2 AV
CLRWR
TDF
EN55022Q
EN55022A
100
90
80
70
60
50
40
30
20
10
0
150 kHz
30 MHz
Comment: LG Electronics USA_PERSONAL COMPUTER_CG_N_1170

Appendix 2. Phorographs of EUT in side PCB

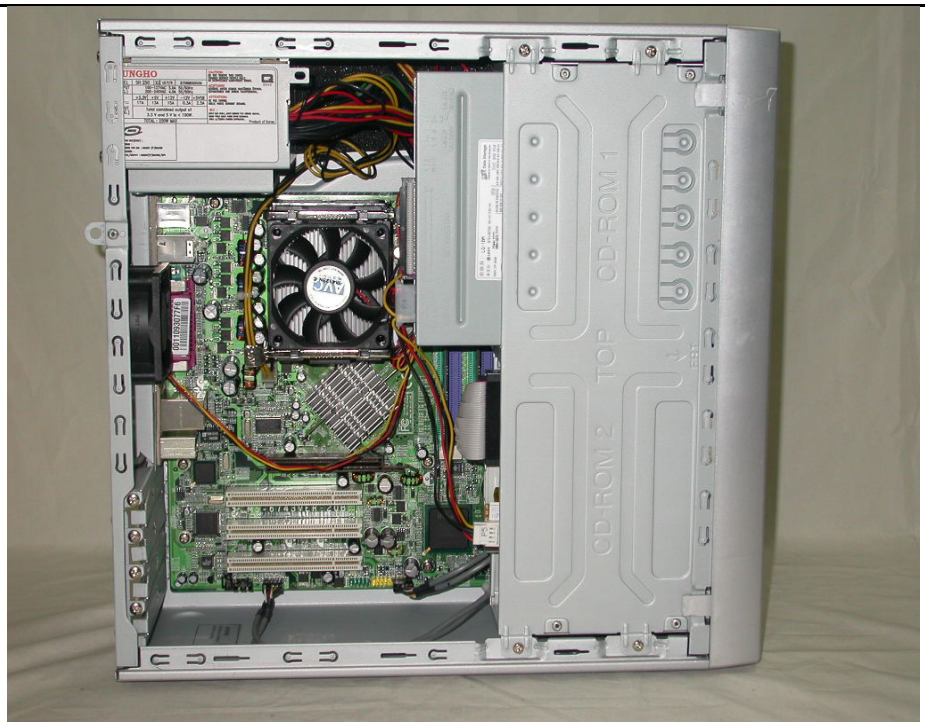

Appendix 3. Block diagram of EUT

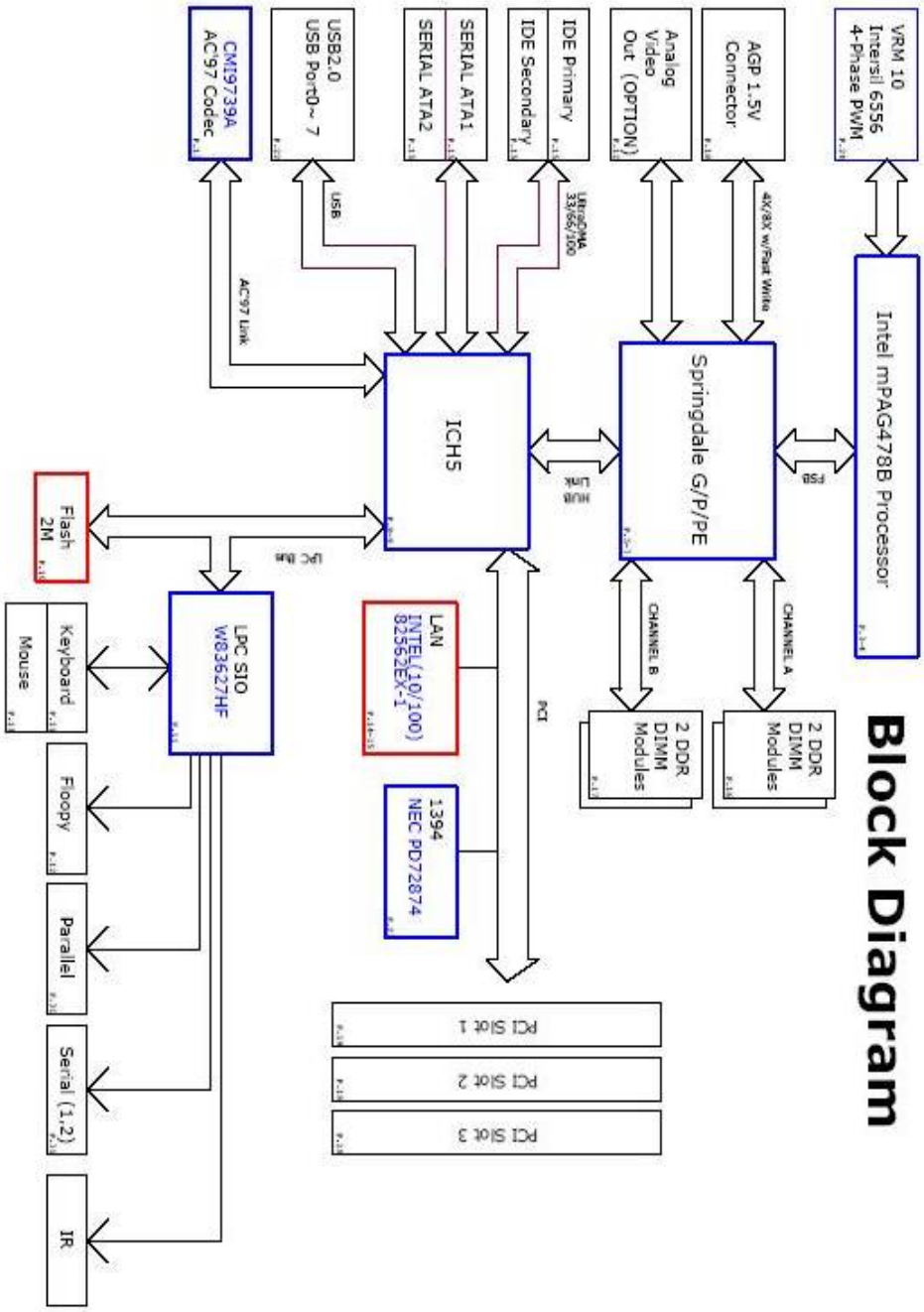

Appendix 4. Circuit Diagram