1000 Sylvan Avenue, Englewood Cliffs, NJ 07632,
United States
Tel: 02-3777-1114
Fax: 02-6719-7509

Request for Class II Permissive Change

FCC ID: BEJE2442TA **Data: Jul 30, 2012**

Please be notified that we, the undersigned, LG Electronics U.S.A., Inc. declare that the reasons for this Class II permissive change are as below:

1. To change the main IC

Thank you.
Sincerely,

Christopher Johnson/ Sr. Manager
LG Electronics U.S.A., Inc.
Tel: 02-3777-1114
Fax: 02-6719-7509

1000 Sylvan Avenue, Englewood Cliffs, NJ 07632,
United States
Tel: 02-3777-1114
Fax: 02-6719-7509

PCB and block compare

Maker	old	new	Change
PCB Photo	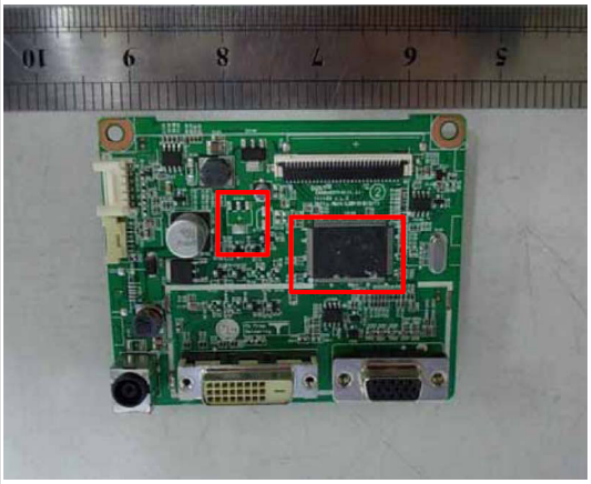	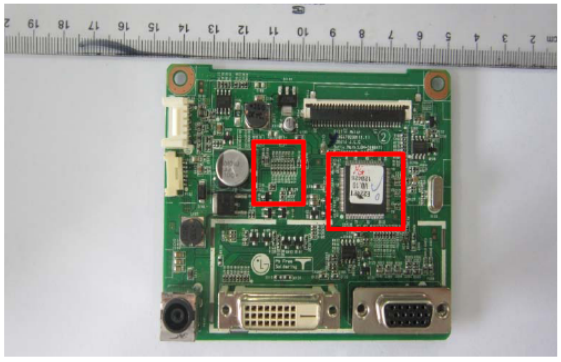	Different: 1. Main IC circuit 2. LED drive
Block	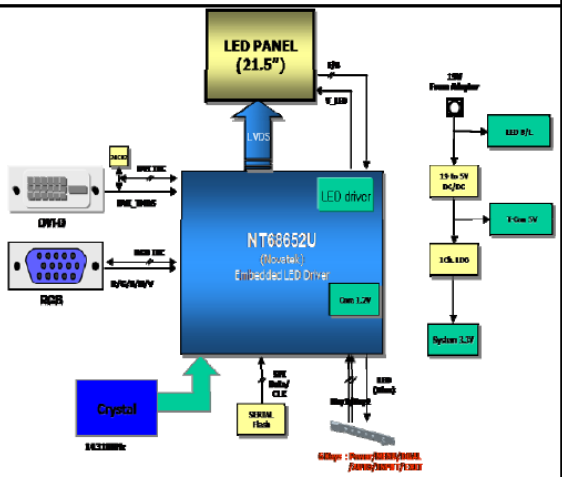	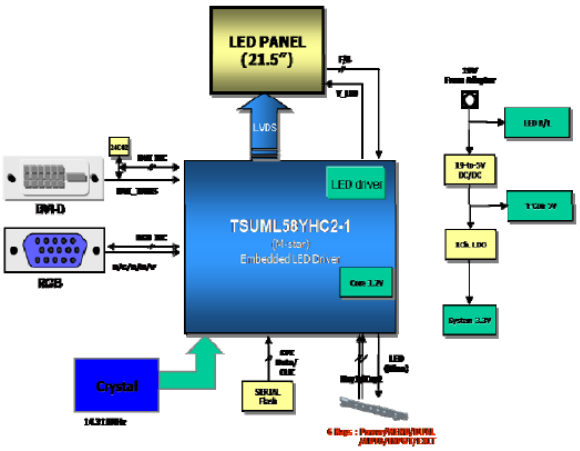	Same : 1)Crystal :same 2) Resolution: same 3)Panel :same 4)Adapter : same

1000 Sylvan Avenue, Englewood Cliffs, NJ 07632,
United States
Tel: 02-3777-1114
Fax: 02-6719-7509

Circuit diagram compare-1

Maker	old	new	Change
Main IC circuit	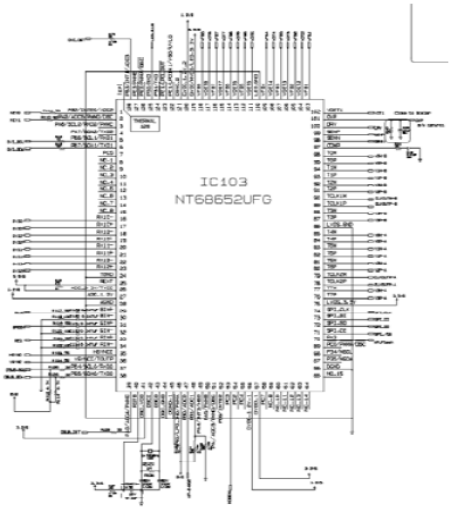	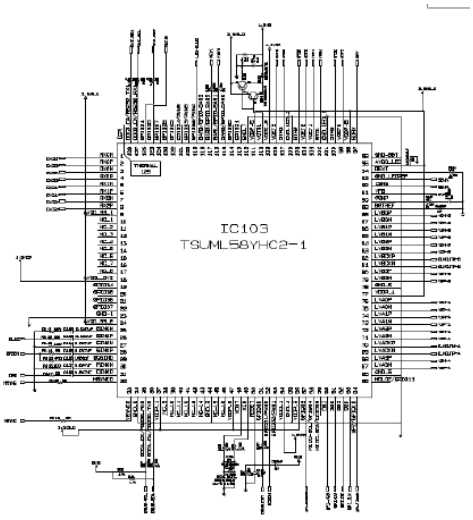	**1) Size: different** **2) Pin No.: Same** **3) Pin output: change** **4) Maker different**
LVDS out	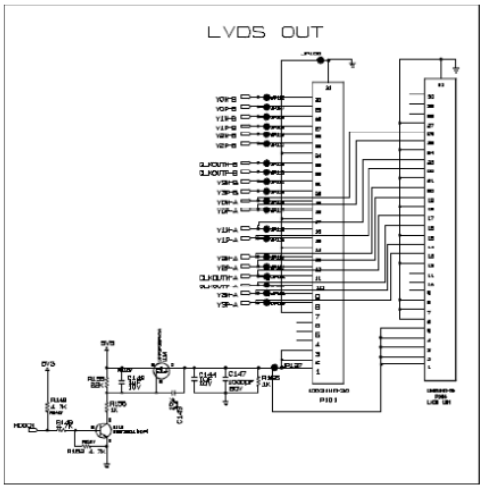	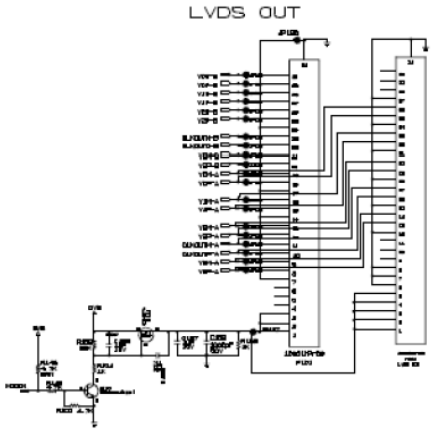	**Same**

1000 Sylvan Avenue, Englewood Cliffs, NJ 07632,
United States
Tel: 02-3777-1114
Fax: 02-6719-7509

Circuit diagram compare-2

Maker	old	new	Change
LED drive CH	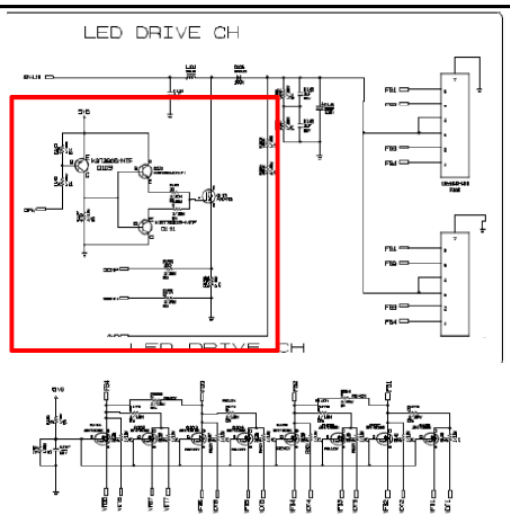	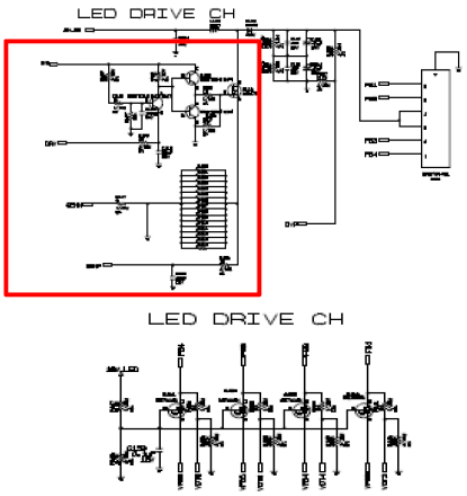	**Change :** **Mos transistor** **→resistor** **Reason: cost down**
19V to 5V	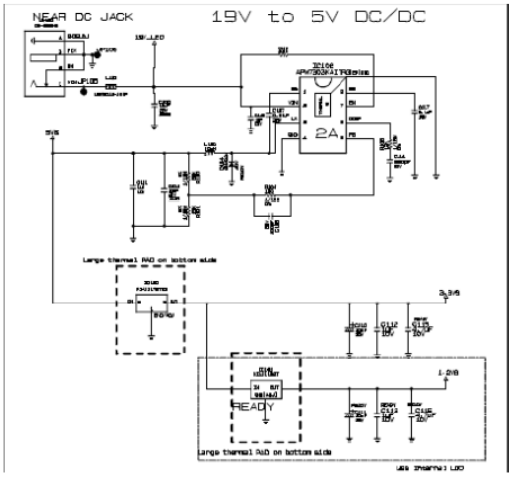	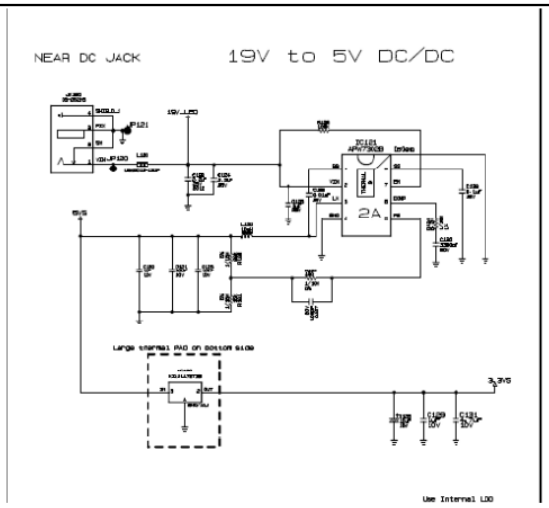	**Same**

1000 Sylvan Avenue, Englewood Cliffs, NJ 07632,
United States
Tel: 02-3777-1114
Fax: 02-6719-7509

Circuit diagram compare-3

Maker	old	new	Change
Dsub Input	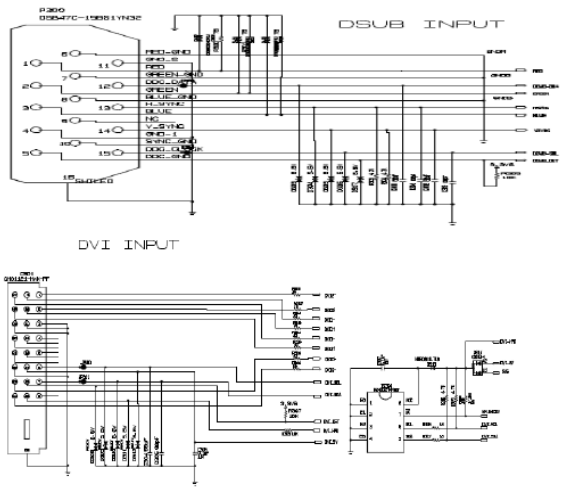	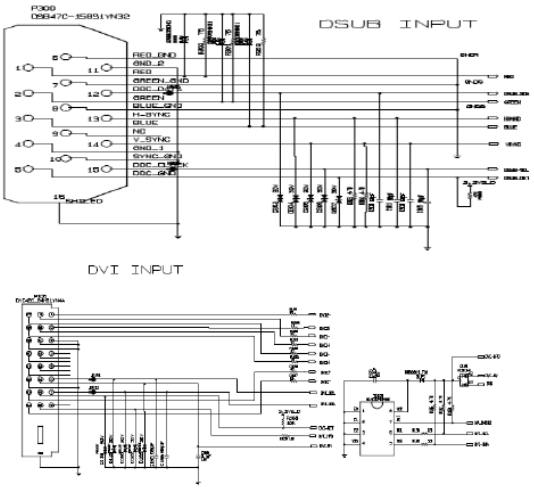	**Same**
Control PCB	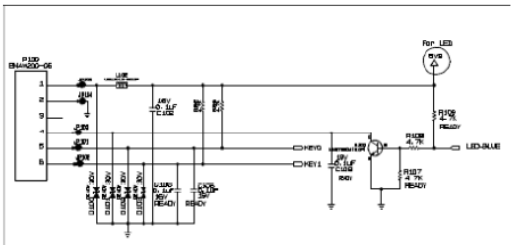	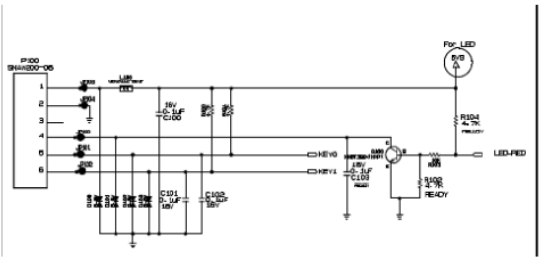	**Same**
2M flash	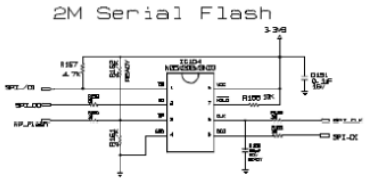	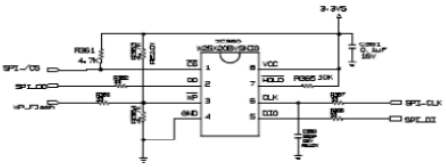	**Same**