SAR TEST REPORT

HCT CO., LTD

EUT Type:	Cellular/PCS GSM/EDGE Phone with Bluetooth (GSM850/ PCS1900) GPRS Class 12 and GPRS mode class B(GPRS and GSM, but not simultaneously)		
FCC ID:	BEJGU280		
Model:	GU280	Trade Name	LG
Date of Issue:	Sep.04, 2009		
Test report No.:	HCTA0909FS01		
Test Laboratory:	**HCT CO., LTD.** SAN 136-1, AMI-RI, BUBAL-EUP, ICHEON-SI, KYOUNGKI-DO, 467-701, KOREA TEL: +82 31 639 8565 FAX: +82 31 639 8525		
Applicant :	**LG Electronics, Inc.** 60-39, Gasan-Dong, Gumchon-Gu, Seoul 153-023, Korea Tel: +82-2-2033-1113 Fax: +82-2-2033-1222		
Testing has been carried out in accordance with:	47CFR §2.1093 FCC OET Bulletin 65(Edition 97-01), Supplement C (Edition 01-01) ANSI/ IEEE C95.1 – 2005 IEEE 1528-2003		
Test result:	The tested device complies with the requirements in respect of all parameters subject to the test. The test results and statements relate only to the items tested. The test report shall not be reproduced except in full, without written approval of the laboratory.		
Signature	Report prepared by : Sun-Hee Kim Test Engineer of SAR Part	Approved by : Jae-Sang So Manager of SAR Part	

Table of Contents

1. INTRODUCTION 3
2. DESCRIPTION OF DEVICE 4
3. DESCRIPTION OF TEST EQUIPMENT 5
   3.1 SAR MEASUREMENT SETUP 5
   3.2 DASY E-FIELD PROBE SYSTEM 6
   3.3 PROBE CALIBRATION PROCESS 7
   3.4 SAM Phantom 9
   3.5 Device Holder for Transmitters 9
   3.6 Brain & Muscle Simulating Mixture Characterization 10
   3.7 SAR TEST EQUIPMENT 11
4. SAR MEASUREMENT PROCEDURE 12
5. DESCRIPTION OF TEST POSITION 13
   5.1 HEAD POSITION 13
   5.2 Body Holster/Belt Clip Configurations 14
6. MEASUREMENT UNCERTAINTY 15
7. ANSI/ IEEE C95.1 - 2005 RF EXPOSURE LIMITS 16
8. SYSTEM VERIFICATION 17
   8.1 Tissue Verification 17
   8.2 System Validation 17
9. RF CONDUCTED POWER 18
   9.1 Procedures Used to Establish RF Signal for SAR 18
10. SAR Evaluation Considerations for Handsets with Multiple Transmitters and Antennas 19
11. SAR TEST DATA SUMMARY 20
   11.1 Measurement Results (GSM850 Head SAR Touch Slide Up) 20
   11.2 Measurement Results (GSM850 Head SAR Tilt Slide Up) 21
   11.3 Measurement Results (GSM850 Head SAR Touch Slide down) 22
   11.4 Measurement Results (GSM850 Head SAR Tilt Slide down) 23
   11.5 Measurement Results (GSM1900 Head SAR Touch Slide Up) 24
   11.6 Measurement Results (GSM1900 Head SAR Tilt Slide Up) 25
   11.7 Measurement Results (GSM1900 Head SAR Touch Slide down) 26
   11.8 Measurement Results (GSM1900 Head SAR Tilt Slide down) 27
   11.9 Measurement Results (GSM850 Body SAR) 28
   11.10 Measurement Results (GSM1900 Body SAR) 29
13. CONCLUSION 30
14. REFERENCES 31
Attachment 1. – SAR Test Plots 32
Attachment 3. – Probe Calibration Data 72
Attachment 3. – Probe Calibration Data 72
Attachment 4. – Dipole Calibration Data 81

1. INTRODUCTION

The FCC has adopted the guidelines for evaluating the environmental effects of radio frequency radiation in ET Docket 93-62 on Aug. 6, 1996 to protect the public and workers from the potential hazards of RF emissions due to FCC-regulated portable devices.

The safety limits used for the environmental evaluation measurements are based on the criteria published by the American National Standards Institute (ANSI) for localized specific absorption rate (SAR) in IEEE/ANSI C95.1-2005 Standard for Safety Levels with Respect to Human Exposure to Radio Frequency Electromagnetic Fields, 3 kHz to 300 GHz. 1992 by the Institute of Electrical and Electronics Engineers, Inc., New York, New York 10017. The measurement procedure described in IEEE/ANSI C95.3-1992 Recommended Practice for the Measurement of Potentially Hazardous Electromagnetic Fields - RF and Microwave is used for guidance in measuring SAR due to the RF radiation exposure from the Equipment Under Test (EUT). These criteria for SAR evaluation are similar to those recommended by the National Council on Radiation Protection and Measurements (NCRP) in Biological Effects and Exposure Criteria for Radio frequency Electromagnetic Fields," NCRP Report No. 86 NCRP, 1986, Bethesda, MD 20814. SAR is a measure of the rate of energy absorption due to exposure to an RF transmitting source. SAR values have been related to threshold levels for potential biological hazards.

SAR Definition

Specific Absorption Rate (SAR) is defined as the time derivative of the incremental electromagnetic energy (d*W*) absorbed by (dissipated in) an incremental mass (d*m*) contained in a volume element (d*V*) of a given density (*r*). It is also defined as the rate of RF energy absorption per unit mass at a point in an absorbing body.

$$SAR = \frac{d}{dt}\left(\frac{dU}{dm}\right) = \frac{d}{dt}\left(\frac{dU}{\rho\, dv}\right)$$

Figure 2. SAR Mathematical Equation

SAR is expressed in units of Watts per Kilogram (W/kg).

$$SAR = \sigma E^2 / \rho$$

where:

σ = conductivity of the tissue-simulant material (S/m)

ρ = mass density of the tissue-simulant material (kg/m^3)

E = Total RMS electric field strength (V/m)

NOTE: The primary factors that control rate of energy absorption were found to be the wavelength of the incident field in relations to the dimensions and geometry of the irradiated organism, the orientation of the organism in relation to the polarity of field vectors, the presence of reflecting surfaces, and whether conductive contact is made by the organism with a ground plane.

2. DESCRIPTION OF DEVICE

Environmental evaluation measurements of specific absorption rate (SAR) distributions in emulated human head and body tissues exposed to radio frequency (RF) radiation from wireless portable devices for compliance with the rules and regulations of the U.S. Federal Communications Commission (FCC).

EUT Type	Cellular/PCS GSM/EDGE Phone with Bluetooth (GSM850/ PCS1900) GPRS Class 12 and GPRS mode class B(GPRS and GSM, but not simultaneously)
FCC ID	BEJGU280
Model(s)	GU280
Trade Name	LG
Serial Number(s)	#1
Application Type	Certification
Modulation(s)	GSM850/GSM1900
Tx Frequency	824.20 - 848.80 MHz (GSM850) 1 850.20 – 1 909.80 MHz (GSM1900)
Rx Frequency	869.20 - 893.80 MHz (GSM850) 1 930.20 – 1 989.80 MHz (GSM1900)
FCC Classification	Licensed Portable Transmitter Held to Ear (PCE)
Production Unit or Identical Prototype	Prototype
Max SAR	0.318 W/kg GSM850 Head SAR / 0.657 W/kg GSM850 Body SAR 0.706 W/kg GSM1900 Head SAR / 0.392 W/kg GSM1900 Body SAR
Date(s) of Tests	Sep. 1, 2009 ~ Sep. 2, 2009
Antenna Type	Intenna

3. DESCRIPTION OF TEST EQUIPMENT

3.1 SAR MEASUREMENT SETUP

These measurements are performed using the DASY4 automated dosimetric assessment system. It is made by Schmid & Partner Engineering AG (SPEAG) in Zurich, Switzerland. It consists of high precision robotics system (Staubli), robot controller, Pentium III computer, near-field probe, probe alignment sensor, and the generic twin phantom containing the brain equivalent material. The robot is a six-axis industrial robot performing precise movements to position the probe to the location (points) of maximum electromagnetic field (EMF) (see Figure.3.1).

A cell controller system contains the power supply, robot controller, teach pendant (Joystick), and remote control, is used to drive the robot motors. The PC consists of the HP Pentium IV 3.0 GHz computer with Windows XP system and SAR Measurement Software DASY4, A/D interface card, monitor, mouse, and keyboard. The Staubli Robot is connected to the cell controller to allow software manipulation of the robot. A data acquisition electronic (DAE) circuit performs the signal amplification, signal multiplexing, AD-conversion, offset measurements, mechanical surface detection, collision detection, etc. is connected to the Electro-optical coupler (EOC). The EOC performs the conversion from the optical into digital electric signal of the DAE and transfers data to the PC plug-in card.

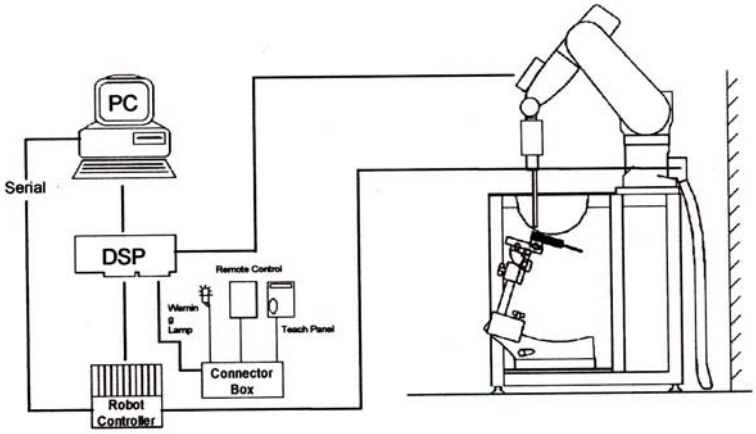

Figure 3.1 HCT SAR Lab. Test Measurement Set-up

The DAE4 consists of a highly sensitive electrometer-grade preamplifier with auto-zeroing, a channel and gain-switching multiplexer, a fast 16 bit AD-converter and a command decoder and control logic unit. Transmission to the PC-card is accomplished through an optical downlink for data and status information and an optical uplink for commands and clock lines. The mechanical probe mounting device includes two different sensor systems for frontal and sidewise probe contacts. They are also used for mechanical surface detection and probe collision detection. The robot uses its own controller with a built in VME-bus computer. The system is described in detail in.

3.2 DASY E-FIELD PROBE SYSTEM

3.2.1 ET3DV6 Probe Specification

Construction	Symmetrical design with triangular core Built-in optical fiber for surface detection System Built-in shielding against static charges
Calibration	In air from 10 MHz to 2.5 GHz In brain and muscle simulating tissue at Frequencies of 450 MHz, 900 MHz and 1.8 GHz (accuracy: 8 %)
Frequency	10 MHz to > 6 GHz; Linearity: ± 0.2 dB (30 MHz to 3 GHz)
Directivity	± 0.2 dB in brain tissue (rotation around probe axis) ± 0.4 dB in brain tissue (rotation normal probe axis)
Dynamic	5 μW/g to > 100 mW/g;
Range Linearity:	± 0.2 dB
Surface Detection	± 0.2 mm repeatability in air and clear liquids over diffuse reflecting surfaces.
Dimensions	Overall length: 330 mm Tip length: 16 mm Body diameter: 12 mm Tip diameter: 6.8 mm Distance from probe tip to dipole centers: 2.7 mm
Application	General dissymmetry up to 3 GHz Compliance tests of mobile phones Fast automatic scanning in arbitrary phantoms

Figure 3.2 Photograph of the probe and the Phantom

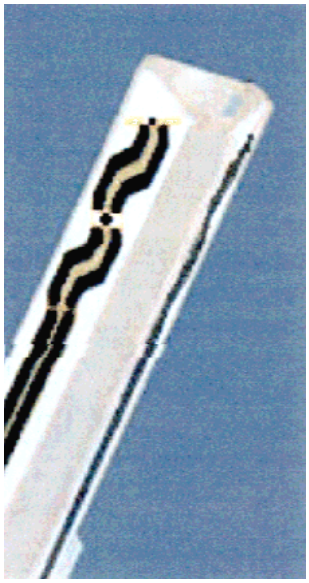

Figure 3.3 ET3DV6 E-field Probe

The SAR measurements were conducted with the dosimetric probe ET3DV6, designed in the classical triangular configuration and optimized for dosimetric evaluation. The probe is constructed using the thick film technique; with printed resistive lines on ceramic substrates. The probe is equipped with an optical multifiber line ending at the front of the probe tip. It is connected to the EOC box on the robot arm and provides an automatic detection of the phantom surface. Half of the fibers are connected to a pulsed infrared transmitter, the other half to a synchronized receiver. As the probe approaches the surface, the reflection from the surface produces a coupling from the transmitting to the receiving fibers. This reflection increases first during the approach, reaches a maximum and then decreases. If the probe is flatly touching the surface, the coupling is zero. The distance of the coupling maximum to the surface is independent of the surface reflectivity and largely independent of the surface to probe angle. The DASY4 software reads the reflection during a software approach and looks for the maximum using a 2nd order fitting. The approach is stopped at reaching the maximum.

3.3 PROBE CALIBRATION PROCESS

3.3.1 E-Probe Calibration

Each probe is calibrated according to a dosimetric assessment procedure with an accuracy better than ± 10 %. The spherical isotropy was evaluated with the proper procedure and found to be better than ± 0.25 dB. The sensitivity parameters (NormX, NormY, NormZ), the diode compression parameter (DCP) and the conversion factor (ConvF) of the probe is tested.

The free space E-field from amplified probe outputs is determined in a test chamber. This is performed in a TEM cell for frequencies bellow 1 GHz, and in a waveguide above 1 GHz for free space. For the free space calibration, the probe is placed in the volumetric center of the cavity and at the proper orientation with the field. The probe is then rotated 360 degrees.

E-field temperature correlation calibration is performed in a flat phantom filled with the appropriate simulated brain tissue. The measured free space E-field in the medium correlates to temperature rise in a dielectric medium. For temperature correlation calibration a RF transparent thermistor-based temperature probe is used in conjunction with the E-field probe.

$$SAR = C\frac{\Delta T}{\Delta t}$$

where:

Δt = exposure time (30 seconds),

C = heat capacity of tissue (brain or muscle),

ΔT = temperature increase due to RF exposure.

SAR is proportional to $\Delta T / \Delta t$, the initial rate of tissue heating, before thermal diffusion takes place. Now it's possible to quantify the electric field in the simulated tissue by equating the thermally derived SAR to the E- field;

$$SAR = \frac{|E|^2 \cdot \sigma}{\rho}$$

where:

σ = simulated tissue conductivity,

ρ = Tissue density (1.25 g/cm^3 for brain tissue)

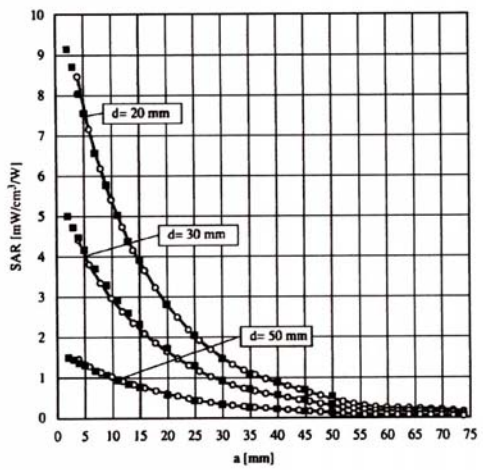

Figure 3.4 E-Field and Temperature measurements at 900 MHz

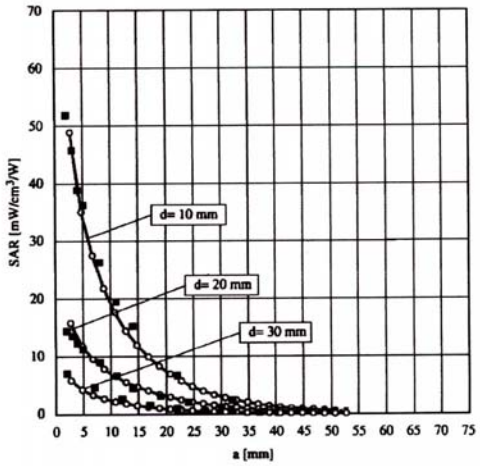

Figure 3.5 E-Field and temperature measurements at 1.8 GHz

3.3.2 Data Extrapolation

The DASY4 software automatically executes the following procedures to calculate the field units from the microvolt readings at the probe connector. The first step of the evaluation is a linearization of the filtered input signal to account for the compression characteristics of the detector diode. The compensation depends on the input signal, the diode type and the DC-transmission factor from the diode to the evaluation electronics. If the exciting field is pulsed, the crest factor of the signal must be known to correctly compensate for peak power. The formula for each channel can be given like below;

$$V_i = U_i + U_i^2 \cdot \frac{cf}{dcp_i}$$

with
V_i = compensated signal of channel i (i=x,y,z)
U_i = input signal of channel i (i=x,y,z)
cf = crest factor of exciting field (DASY parameter)
dcp_i = diode compression point (DASY parameter)

From the compensated input signals the primary field data for each channel can be evaluated:

E-field probes:

$$E_i = \sqrt{\frac{V_i}{Norm_i \cdot ConvF}}$$

with
V_i = compensated signal of channel i (i = x,y,z)
$Norm_i$ = sensor sensitivity of channel i (i = x,y,z) $\mu V/(V/m)^2$ for E-field probes
ConvF = sensitivity of enhancement in solution
E_i = electric field strength of channel i in V/m

The RSS value of the field components gives the total field strength (Hermetian magnitude):

$$E_{tot} = \sqrt{E_x^2 + E_y^2 + E_z^2}$$

The primary field data are used to calculate the derived field units.

$$SAR = E_{tot}^2 \cdot \frac{\sigma}{\rho \cdot 1000}$$

with
SAR = local specific absorption rate in W/g
E_{tot} = total field strength in V/m
σ = conductivity in [mho/m] or [Siemens/m]
ρ = equivalent tissue density in g/cm^3

The power flow density is calculated assuming the excitation field to be a free space field.

$$P_{pwe} = \frac{E_{tot}^2}{3770}$$

with
P_{pwe} = equivalent power density of a plane wave in W/cm^2
E_{tot} = total electric field strength in V/m

3.4 SAM Phantom

The SAM Phantom is constructed of a fiberglass shell integrated in a wooden table. The shape of the shell is based on data from an anatomical study designed to determine the maximum exposure in at least 90 % of all users. It enables the dosimetric evaluation of left and right hand phone usage as well as body mounted usage at the flat phantom region. A cover prevents the evaporation of the liquid. Reference markings on the Phantom allow the complete setup of all predefined phantom positions and measurement grids by manually teaching three points in the robot.

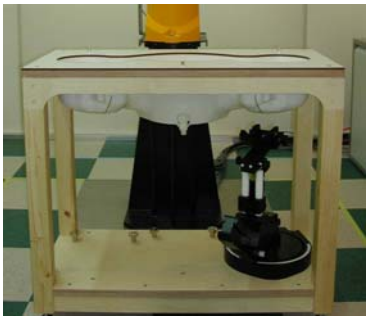

Figure 3.6 SAM Phantom

Shell Thickness	2.0 mm
Filling Volume	about 30 L
Dimensions	810 mm x 1 000 mm x 500 mm (H x L x W)

3.5 Device Holder for Transmitters

In combination with the SAM Phantom V 4.0, the Mounting Device (POM) enables the rotation of the mounted transmitter in spherical coordinates whereby the rotation points is the ear opening. The devices can be easily, accurately, and repeatable positioned according to the FCC and CENELEC specifications. The device holder can be locked at different phantom locations (left head, right head, flat phantom).

Figure 3.7 Device Holder

Note: A simulating human hand is not used due to the complex anatomical and geometrical structure of the hand that may produced infinite number of configurations. To produce the Worst-case condition (the hand absorbs antenna output power), the hand is omitted during the tests.

3.6 Brain & Muscle Simulating Mixture Characterization

The brain and muscle mixtures consist of a viscous gel using hydrox-ethyl cellulose (HEC) gelling agent and saline solution (see Table 3.1). Preservation with a bacteriacide is added and visual inspection is made to make sure air bubbles are not trapped during the mixing process. The mixture is calibrated to obtain proper dielectric constant (permittivity) and conductivity of the desired tissue. The mixture characterizations used for the brain and muscle tissue simulating liquids are according to the data by C. Gabriel and G. Hartsgrove.

Ingredients (% by weight)	Frequency (MHz)									
	450		835		915		1 900		2 450	
Tissue Type	Head	Body	Head	Body	Head	Body	Head	Body	Head	Body
Water	38.56	51.16	41.45	52.4	41.05	56.0	54.9	40.4	62.7	73.2
Salt (NaCl)	3.95	1.49	1.45	1.4	1.35	0.76	0.18	0.5	0.5	0.04
Sugar	56.32	46.78	56.0	45.0	56.5	41.76	0.0	58.0	0.0	0.0
HEC	0.98	0.52	1.0	1.0	1.0	1.21	0.0	1.0	0.0	0.0
Bactericide	0.19	0.05	0.1	0.1	0.1	0.27	0.0	0.1	0.0	0.0
Triton X-100	0.0	0.0	0.0	0.0	0.0	0.0	0.0	0.0	36.8	0.0
DGBE	0.0	0.0	0.0	0.0	0.0	0.0	44.92	0.0	0.0	26.7

Salt:	99 % Pure Sodium Chloride	Sugar:	98 % Pure Sucrose
Water:	De-ionized, 16M resistivity	HEC:	Hydroxyethyl Cellulose
DGBE:	99 % Di(ethylene glycol) butyl ether,[2-(2-butoxyethoxy) ethanol]		
Triton X-100(ultra pure):	Polyethylene glycol mono[4-(1,1,3,3-tetramethylbutyl)phenyl] ether		

Table 3.1 Composition of the Tissue Equivalent Matter

3.7 SAR TEST EQUIPMENT

Manufacturer	Type / Model	S/N	Calib. Date	Calib.Interval	Calib.Due
SPEAG	SAM Phantom	-	N/A	N/A	N/A
Staubli	Robot RX90L	F01/5K09A1/A/01	N/A	N/A	N/A
Staubli	Robot ControllerCS7MB	F99/5A82A1/C/01	N/A	N/A	N/A
HP	Pavilion t000_puffer	KRJ51201TV	N/A	N/A	N/A
SPEAG	Light Alignment Sensor	265	N/A	N/A	N/A
Staubli	Teach Pendant (Joystick)	D221340.01	N/A	N/A	N/A
SPEAG	DAE3	446	May 22, 2009	Annual	May 22, 2010
SPEAG	DAE3	466	July 21, 2009	Annual	July 21, 2010
SPEAG	E-Field Probe ET3DV6	1631	Jun. 24, 2009	Annual	Jun. 24, 2010
SPEAG	E-Field Probe ET3DV6	1609	Mar. 17, 2009	Annual	Mar. 17, 2010
SPEAG	E-Field Probe ET3DV6	3161	July 22, 2009	Annual	July 22, 2010
SPEAG	Validation Dipole D450V2	1007	July 15, 2008	Biennial	July 15, 2010
SPEAG	Validation Dipole D835V2	441	May 25, 2009	Annual	May 25, 2010
SPEAG	Validation Dipole D1800V2	2d007	May 20, 2008	Biennial	May 20, 2010
SPEAG	Validation Dipole D1900V2	5d032	July 20, 2009	Annual	July 20, 2010
SPEAG	Validation Dipole D2450V2	743	Aug. 27, 2008	Biennial	Aug. 27, 2010
Agilent	Power Meter(F) E4419B	MY41291386	Nov. 05, 2008	Annual	Nov. 05, 2009
Agilent	Power Sensor(G) 8481	MY41090870	Nov. 05, 2008	Annual	Nov. 05, 2009
HP	Dielectric Probe Kit 85070C	00721521	N/A	N/A	N/A
HP	Dual Directional Coupler	16072	Nov. 05, 2008	Annual	Nov. 05, 2009
R&S	Base Station CMU200	110740	July 26, 2009	Annual	July 26, 2010
Agilent	Base Station E5515C	GB44400269	Feb. 10, 2009	Annual	Feb. 10, 2010
HP	Signal Generator E4438C	MY42082646	Dec. 24, 2008	Annual	Dec. 24, 2009
HP	Network Analyzer 8753C	3310J01394	Dec. 04, 2008	Annual	Dec. 04, 2009
Tescom	TC-3000/ Bluetooth	3000A490112	Jan. 09, 2009	Annual	Jan. 09, 2010

NOTE:

The E-field probe was calibrated by SPEAG, by the waveguide technique procedure. Dipole Validation measurement is performed by HCT Lab. before each test. The brain simulating material is calibrated by HCT using the dielectric probe system and network analyzer to determine the conductivity and permittivity (dielectric constant) of the brain-equivalent material.

4. SAR MEASUREMENT PROCEDURE

The evaluation was performed with the following procedure:

1. The SAR value at a fixed location above the ear point was measured and was used as a reference value for assessing the power drop.

2. The SAR distribution at the exposed side of the head was measured at a distance of 3.9 mm from the inner surface of the shell. The area covered the entire dimension of the head and the horizontal grid spacing was 20 mm x 20 mm. Based on this data, the area of the maximum absorption was determined by spline interpolation.

3. Around this point, a volume of 32 mm x 32 mm x 30 mm was assessed by measuring 5 x 5 x 7 points. On this basis of this data set, the spatial peak SAR value was evaluated with the following procedure:

   a. The data at the surface were extrapolated, since the center of the dipoles is 2.7 mm away from the tip of the probe and the distance between the surface and the lowest measuring point is 1.2 mm. The extrapolation was based on a least square algorithm. A polynomial of the fourth order was calculated through the points in z-axes. This polynomial was then used to evaluate the points between the surface and the probe tip.
   b. The maximum interpolated value was searched with a straight-forward algorithm. Around this maximum the SAR values averaged over the spatial volumes (1 g or 10 g) were computed using the 3D-Spline interpolation algorithm. The 3D-spline is composed of three one-dimensional splines with the “Not a knot” condition (in x, y, and z directions. The volume was integrated with the trapezoidal algorithm. One thousand points (10 x 10 x 10) were interpolated to calculate the average.
   c. All neighboring volumes were evaluated until no neighboring volume with a higher average value was found.

4. The SAR value, at the same location as procedure #1, was re-measured. If the value changed by more than 5 %, the evaluation is repeated.

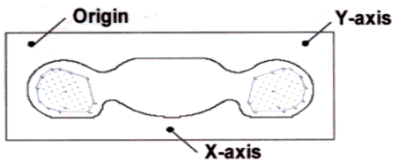

Figure 4.1 SAR Measurement Point in Area Scan

5. DESCRIPTION OF TEST POSITION

5.1 HEAD POSITION

The device was placed in a normal operating position with the Point A on the device, as illustrated in following drawing, aligned with the location of the RE(ERP) on the phantom. With the ear-piece pressed against the head, the vertical center line of the body of the handset was aligned with an imaginary plane consisting of the RE, LE and M. While maintaining these alignments, the body of the handset was gradually moved towards the cheek until any point on the mouth-piece or keypad contacted the cheek. This is a cheek/touch position. For ear/tilt position, while maintain the device aligned with the BM and FN lines, the device was pivot against ERP back for 15º or until the device antenna touch the phantom. Please refer to IEEE 1528-2003 illustration below.

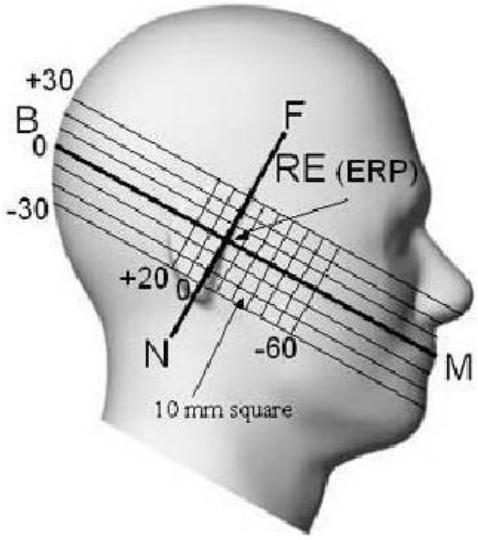

Figure 5.1 Side view of the phantom

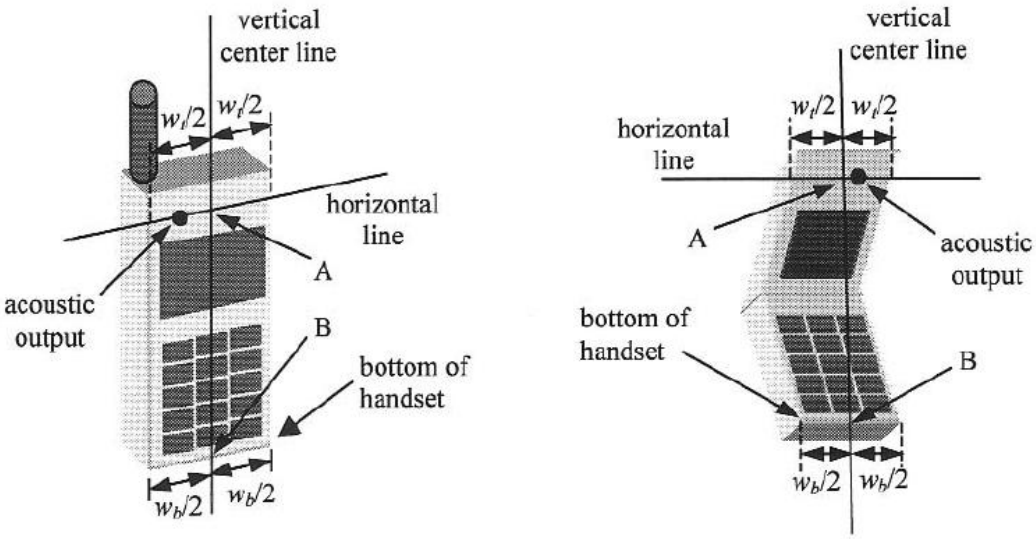

Figure 5.2 Handset vertical and horizontal reference lines

5.2 Body Holster/Belt Clip Configurations

Body-worn operating configurations are tested with the belt-clips and holsters attached to the device and positioned against a flat phantom in a normal use configuration. A device with a headset output is tested with a headset connected to the device. Body dielectric parameters are used.

Accessories for Body-worn operation configurations are divided into two categories: those that do not contain metallic components and those that contain metallic components. When multiple accessories that do not contain metallic components are supplied with the device, the device is tested with only the accessory that dictates the closest spacing to the body. Then multiple accessories that contain metallic components are tested with each accessory. If multiple accessory share an identical metallic component (i.e. the same metallic belt-clip used with different holsters with no other metallic components) only the accessory that dictates the closest spacing to the body is tested.

Body-worn accessories may not always be supplied or available as options for some Devices intended to be authorized for body-worn use. In this case, a test configuration with a separation distance between the back of the device and the flat phantom is used.

Since this EUT does not supply any body worn accessory to the end user a distance of 2.0 cm from the EUT back surface to the liquid interface is configured for the generic test.

"See the Test SET-UP Photo"

Transmitters that are designed to operate in front of a person's face, as in push-to-talk configurations, are tested for SAR compliance with the front of the device positioned to face the flat phantom. For devices that are carried next to the body such as a shoulder, waist or chest-worn transmitters, SAR compliance is tested with the accessory(ies), Including headsets and microphones, attached to the device and positioned against a flat phantom in a normal use configuration.

In all cases SAR measurements are performed to investigate the worst-case positioning. Worstcase positioning is then documented and used to perform Body SAR testing.

6. MEASUREMENT UNCERTAINTY

Measurement uncertainties in SAR measurements are difficult to quantify due to several variables including biological, physiological, and environmental. However, we estimate the measurement uncertainties in SAR to be less than 15 % - 25 %.

According to ANSI/IEEE C95.3, the overall uncertainties are difficult to assess and will vary with the type of meter and usage situation. However, accuracy's of 1 dB to ± 3 dB can be expected in practice, with greater uncertainties in near-field situations and at higher frequencies (shorter wavelengths), or areas where large reflecting objects are present. Under optimum measurement conditions, SAR measurement uncertainties of at least ± 2 dB can be expected.

According to CENELEC, typical worst-case uncertainty of field measurements is 5 dB. For well-defined modulation characteristics the uncertainty can be reduced to ± 3 dB.

Error Description	Uncertainty value [%]	Probability Distribution	Divisor	ci	ci^2	Standard Uncertainty [%]	Stand Uncert^2	(Stand Uncert^2) X (ci^2)	Vi & Veff
1. Measurement System									
Probe Calibration	5.5	Normal	1.00	1	1	5.50	30.25	30.25	∞
Axial Isotropy	4.7	Rectangular	1.73	0.7	0.49	2.71	7.36	3.61	∞
Hemispherical Isotropy	9.6	Rectangular	1.73	0.7	0.49	5.54	30.72	15.05	∞
Linearity	4.7	Rectangular	1.73	1	1	2.71	7.36	7.36	∞
System Detection limits	1.0	Rectangular	1.73	1	1	0.58	0.33	0.33	∞
Boundary effect	1.0	Rectangular	1.73	1	1	0.58	0.33	0.33	∞
Response time	0.8	Rectangular	1.73	1	1	0.46	0.21	0.21	∞
RF Ambient conditions	3.0	Rectangular	1.73	1	1	1.73	3.00	3.00	∞
Readout Electronics	0.3	Normal	1.00	1	1	0.30	0.09	0.09	∞
Integration time	2.6	Rectangular	1.73	1	1	1.50	2.25	2.25	∞
Probe positioner	0.4	Rectangular	1.73	1	1	0.23	0.05	0.05	∞
Probe positionering	2.9	Rectangular	1.73	1	1	1.67	2.80	2.80	∞
Maximum SAR evaluation	1.0	Rectangular	1.73	1	1	0.58	0.33	0.33	∞
2.Test Sample Related						Sub Total		65.69	
Device Positioning	1.8	Normal	1.00	1	1	1.81	3.28	3.28	9
Device Holder	3.6	Normal	1.00	1	1	3.60	12.96	12.96	∞
Power Drift	5.0	Rectangular	1.73	1	1	2.89	8.33	8.33	∞
3. Phantom and Setup						Sub Total		24.57	
Phantom Uncertainty	4.0	Rectangular	1.73	1	1	2.31	5.33	5.33	∞
Liquid conductivity (target)	5.0	Rectangular	1.73	0.5	0.25	2.89	8.33	2.08	∞
Liquid conductivity (measurement error)	2.5	Normal	1.00	0.5	0.25	2.50	6.25	1.56	∞
Liquid permittivity (target)	5.0	Rectangular	1.73	0.5	0.25	2.89	8.33	2.08	∞
Liquid permittivity (measurement error)	2.5	Normal	1.00	0.5	0.25	2.50	6.25	1.56	∞
						Sub Total		12.63	
Combined standard uncertainty [%]						**10.14**		102.88	-
Expanded uncertainty [*k*=2, approximately confidence level 95 %]						**± 20.28 %**			

Table 6.1 Breakdown of Errors

7. ANSI/ IEEE C95.1 - 2005 RF EXPOSURE LIMITS

HUMAN EXPOSURE	UNCONTROLLED ENVIRONMENT General Population (W/kg) or (mW/g)	CONTROLLED ENVIRONMENT Occupational (W/kg) or (mW/g)
SPATIAL PEAK SAR * (Brain)	1.60	8.00
SPATIAL AVERAGE SAR ** (Whole Body)	0.08	0.40
SPATIAL PEAK SAR *** (Hands / Feet / Ankle / Wrist)	4.00	20.00

Table 7.1 Safety Limits for Partial Body Exposure

NOTES:

* The Spatial Peak value of the SAR averaged over any 1 g of tissue (defined as a tissue volume in the shape of a cube) and over the appropriate averaging time.

** The Spatial Average value of the SAR averaged over the whole-body.

*** The Spatial Peak value of the SAR averaged over any 10 g of tissue (defined as a tissue volume in the shape of a cube) and over the appropriate averaging time.

Uncontrolled Environments are defined as locations where there is the exposure of individuals who have no knowledge or control of their exposure.

Controlled Environments are defined as locations where there is exposure that may be incurred by persons who are aware of the potential for exposure, (i.e.as a result of employment or occupation).

8. SYSTEM VERIFICATION

8.1 Tissue Verification

Freq. [MHz]	Date	Liquid	Liquid Temp.[°C]	Parameters	Target Value	Measured Value	Deviation [%]	Limit [%]
835	Sep.01, 2009	Head	21.2	ε r	41.5	42	+ 1.20	± 5
				σ	0.90	0.893	- 0.78	± 5
835	Sep.01, 2009	Body	21.2	ε r	55.2	54.03	- 2.12	± 5
				σ	0.97	0.99	+ 2.06	± 5
1 900	Sep.02, 2009	Head	21.3	ε r	40.0	39.3	- 1.75	± 5
				σ	1.40	1.41	+ 0.71	± 5
1 900	Sep.02, 2009	Body	21.3	ε r	53.3	52.28	- 1.91	± 5
				σ	1.52	1.50	- 1.32	± 5

8.2 System Validation

Prior to assessment, the system is verified to the ± 10 % of the specifications at 835 MHz / 1 900 MHz by using the system validation kit. (Graphic Plots Attached)

* Input Power: 100 m W

Freq. [MHz]	Date	Liquid	Liquid Temp. [°C]	SAR Average	Target Value (SPEAG) (mW/g)	*Measured Value (mW/g)	Deviation [%]	Limit [%]
835	Sep.01, 2009	Head	21.2	1 g	9.56	0.965	+ 0.94	± 10
1 900	Sep.02, 2009	Head	21.3	1 g	40.5	4.12	+ 1.73	± 10

9. RF CONDUCTED POWER

Power measurements were performed using a base station simulator under digital average power

9.1 Procedures Used to Establish RF Signal for SAR

The handset was placed into a simulated call using a base station simulator in a shielded chamber. Such test signals offer a consistent means for testing SAR and are recommended for evaluation SAR[4] SAR measurements were taken with a fully charged battery. In order to verify that the device was tested and maintained at full power, this was configured with the base station simulator. The SAR measurement Software calculates a reference point at the start and end of the test to check for power drifts. If conducted Power deviations of more then 5 % occurred, the tests were repeated.

Band	Channel	Voice	GPRS Data				EDGE Data			
		GSM (dBm)	GPRS 1 TX Slot (dBm)	GPRS 2 TX Slot (dBm)	GPRS 3 TX Slot (dBm)	GPRS 4 TX Slot (dBm)	EDGE 1 TX Slot (dBm)	EDGE 2 TX Slot (dBm)	EDGE 3 TX Slot (dBm)	EDGE 4 TX Slot (dBm)
GSM 850	128	32.64	32.65	32.54	32.51	32.49	27.26	27.24	27.21	27.19
	190	32.67	32.67	32.57	32.54	32.50	27.28	27.26	27.24	27.20
	251	32.71	32.72	32.60	32.57	32.49	27.33	27.30	27.27	27.22
GSM 1900	512	29.76	29.75	29.63	29.57	29.49	25.86	25.81	25.76	25.71
	661	29.96	29.96	29.82	29.76	29.66	26.04	25.99	25.94	25.88
	810	29.97	29.97	29.81	29.75	29.64	26.03	25.98	25.93	25.87

Table 9.1 GSM Conducted output powers

10. SAR Evaluation Considerations for Handsets with Multiple Transmitters and Antennas

10.1 SAR Evaluation Considerations

These procedures were followed according to FCC "SAR Evaluation Considerations for Handsets with Multiple Transmitters and Antennas", May 2008. The procedures are applicable to phones with built-in unlicensed transmitters, such as 802.11 a/b/g and Bluetooth devices.

	2.45	5.15 - 5.35	5.47 - 5.85	GHz
P_{Ref}	12	6	5	mW
Device output power should be rounded to the nearest mW to compare with values specified in this				

Table. 10.1 Output Power Thresholds for Unlicensed Transmitters

	Individual Transmitter	Simultaneous Transmission
Licensed Transmitters	Routine evaluation required	SAR not required: Unlicensed only ○ when stand-alone 1-g SAR is not required and antenna is ≥ 5 cm from other antennas Licensed & Unlicensed ○ when the sum of the 1-g SAR is < 1.6 W/kg for all simultaneous transmitting antennas ○ when SAR to peak location separation ratio of simultaneous transmitting antenna pair is < 0.3 SAR required: Licensed & Unlicensed antenna pairs with SAR to peak location separation ratio ≥ 0.3; test is only required for the configuration that results in the highest SAR in stand-alone configuration for each wireless mode and exposure condition Note: simultaneous transmission exposure conditions for head and body can be different for different style phones; therefore, different test requirements may apply
Unlicensed Transmitters	When there is no simultaneous transmission – ○ output ≤ 60/f: SAR not required ○ output > 60/f: stand-alone SAR required When there is simultaneous transmission – Stand-alone SAR not required when ○ output ≤ 2·P_{Ref} and antenna is ≥ 5.0 cm from other antennas ○ output ≤ P_{Ref} and antenna is ≥ 2.5 cm from other antennas ○ output ≤ P_{Ref} and antenna is < 2.5 cm from other antennas, each with either output power ≤ P_{Ref} or 1-g SAR < 1.2 W/kg Otherwise stand-alone SAR is required When stand-alone SAR is required ○ test SAR on highest output channel for each wireless mode and exposure condition ○ if SAR for highest output channel is > 50% of SAR limit, evaluate all channels according to normal procedures	
Jaw, Mouth and Nose	Flat phantom SAR required ○ when measurement is required in tight regions of SAM and it is not feasible or the results can be questionable due to probe tilt, calibration, positioning and orientation issues ○ position rectangular and clam-shell phones according to flat phantom procedures and conduct SAR measurements for these specific locations	When simultaneous transmission SAR testing is required, contact the FCC Laboratory for interim guidance.

Table. 10.2 SAR Evaluation Requirements for Cellphones with Multiple Transmitters

FCC ID: BEJGU280

BT Max. RF output power: 6.49 dBm (4.46 mW)

Antenna separation distance between Main and BT: 7.35 cm

Because the conducted output power level of the BT transmitter is less than 2*P_{ref}, and the BT antenna is more than 5.0 cm from the Main antenna, neither simultaneous SAR nor stand-alone BT SAR are required for the EUT.

11. SAR TEST DATA SUMMARY

11.1 Measurement Results (GSM850 Head SAR Touch Slide Up)

Frequency		Modulation	Conducted Power (dBm)		Battery	Phantom Position	Antenna Type	SAR(mW/g)
MHz	Channel		Begin	End				
836.6	190 (Mid)	GSM850	32.67	32.49	Standard	Left Ear	Intenna	0.318
836.6	190 (Mid)	GSM850	32.67	32.65	Standard	Right Ear	Intenna	0.289
ANSI/ IEEE C95.1 2005 – Safety Limit Spatial Peak Uncontrolled Exposure/ General Population						**Head 1.6 W/kg (mW/g)** Averaged over 1 gram		

NOTES:

1 The test data reported are the worst-case SAR value with the antenna-head position set in a typical configuration. Test procedures used are according to FCC/OET Bulletin 65, Supplement C [July 2001].
2 All modes of operation were investigated and the worst-case are reported.
3 Measured Depth of Simulating Tissue is 15.0 cm ± 0.2 cm.
4 Tissue parameters and temperatures are listed on the SAR plot.
5 Battery Type ☒ Standard ☐ Extended ☐ Slim
Batteries are fully charged for all readings.
6 Test Signal Call Mode ☐ Manual Test cord ☒ Base Station Simulator
7 Justification for reduced test configurations: per FCC/OET Supplement C (July, 2001), if the SAR measured at the middle channel for each test configuration (Left, right, cheek/touch, tilt/ear, extended and retracted) is at least 3.0 dB lower than the SAR limit, testing at the high and low channels is optional for such test configuration(s).

11.2 Measurement Results (GSM850 Head SAR Tilt Slide Up)

Frequency		Modulation	Conducted Power (dBm)		Battery	Phantom Position	Antenna Type	SAR(mW/g)
MHz	Channel		Begin	End				
836.6	190 (Mid)	GSM850	32.67	32.67	Standard	Left Tilt 15°	Intenna	0.135
836.6	190 (Mid)	GSM850	32.67	32.72	Standard	Right Tilt 15°	Intenna	0.159
ANSI/ IEEE C95.1 2005 – Safety Limit Spatial Peak Uncontrolled Exposure/ General Population						**Head 1.6 W/kg (mW/g)** Averaged over 1 gram		

NOTES:

1 The test data reported are the worst-case SAR value with the antenna-head position set in a typical configuration. Test procedures used are according to FCC/OET Bulletin 65, Supplement C [July 2001].
2 All modes of operation were investigated and the worst-case are reported.
3 Measured Depth of Simulating Tissue is 15.0 cm ± 0.2 cm.
4 Tissue parameters and temperatures are listed on the SAR plot.
5 Battery Type ☒ Standard ☐ Extended ☐ Slim
Batteries are fully charged for all readings.
6 Test Signal Call Mode ☐ Manual Test cord ☒ Base Station Simulator
7 Justification for reduced test configurations: per FCC/OET Supplement C (July, 2001), if the SAR measured at the middle channel for each test configuration (Left, right, cheek/touch, tilt/ear, extended and retracted) is at least 3.0 dB lower than the SAR limit, testing at the high and low channels is optional for such test configuration(s).

11.3 Measurement Results (GSM850 Head SAR Touch Slide down)

Frequency		Modulation	Conducted Power (dBm)		Battery	Phantom Position	Antenna Type	SAR(mW/g)
MHz	Channel		Begin	End				
836.6	190 (Mid)	GSM850	32.67	32.51	Standard	Left Ear	Intenna	0.220
836.6	190 (Mid)	GSM850	32.67	32.50	Standard	Right Ear	Intenna	0.215
ANSI/ IEEE C95.1 2005 – Safety Limit Spatial Peak Uncontrolled Exposure/ General Population						**Head 1.6 W/kg (mW/g)** Averaged over 1 gram		

NOTES:

1 The test data reported are the worst-case SAR value with the antenna-head position set in a typical configuration. Test procedures used are according to FCC/OET Bulletin 65, Supplement C [July 2001].
2 All modes of operation were investigated and the worst-case are reported.
3 Measured Depth of Simulating Tissue is 15.0 cm ± 0.2 cm.
4 Tissue parameters and temperatures are listed on the SAR plot.
5 Battery Type ☒ Standard ☐ Extended ☐ Slim
Batteries are fully charged for all readings.
6 Test Signal Call Mode ☐ Manual Test cord ☒ Base Station Simulator
7 Justification for reduced test configurations: per FCC/OET Supplement C (July, 2001), if the SAR measured at the middle channel for each test configuration (Left, right, cheek/touch, tilt/ear, extended and retracted) is at least 3.0 dB lower than the SAR limit, testing at the high and low channels is optional for such test configuration(s).

11.4 Measurement Results (GSM850 Head SAR Tilt Slide down)

Frequency		Modulation	Conducted Power (dBm)		Battery	Phantom Position	Antenna Type	SAR(mW/g)
MHz	Channel		Begin	End				
836.6	190 (Mid)	GSM850	32.67	32.79	Standard	Left Tilt 15°	Intenna	0.152
836.6	190 (Mid)	GSM850	32.67	32.72	Standard	Right Tilt 15°	Intenna	0.147
ANSI/ IEEE C95.1 2005 – Safety Limit Spatial Peak Uncontrolled Exposure/ General Population						**Head 1.6 W/kg (mW/g)** Averaged over 1 gram		

NOTES:

1 The test data reported are the worst-case SAR value with the antenna-head position set in a typical configuration. Test procedures used are according to FCC/OET Bulletin 65, Supplement C [July 2001].
2 All modes of operation were investigated and the worst-case are reported.
3 Measured Depth of Simulating Tissue is 15.0 cm ± 0.2 cm.
4 Tissue parameters and temperatures are listed on the SAR plot.
5 Battery Type ☒ Standard ☐ Extended ☐ Slim
Batteries are fully charged for all readings.
6 Test Signal Call Mode ☐ Manual Test cord ☒ Base Station Simulator
7 Justification for reduced test configurations: per FCC/OET Supplement C (July, 2001), if the SAR measured at the middle channel for each test configuration (Left, right, cheek/touch, tilt/ear, extended and retracted) is at least 3.0 dB lower than the SAR limit, testing at the high and low channels is optional for such test configuration(s).

11.5 Measurement Results (GSM1900 Head SAR Touch Slide Up)

Frequency		Modulation	Conducted Power (dBm)		Battery	Phantom Position	Antenna Type	SAR(mW/g)
MHz	Channel		Begin	End				
1 880.0	661 (Mid)	GSM1900	29.96	29.94	Standard	Left Ear	Intenna	0.706
1 880.0	661 (Mid)	GSM1900	29.96	29.91	Standard	Right Ear	Intenna	0.524
ANSI/ IEEE C95.1 2005 – Safety Limit Spatial Peak Uncontrolled Exposure/ General Population						**Head 1.6 W/kg (mW/g)** Averaged over 1 gram		

NOTES:

1 The test data reported are the worst-case SAR value with the antenna-head position set in a typical configuration. Test procedures used are according to FCC/OET Bulletin 65, Supplement C [July 2001].
2 All modes of operation were investigated and the worst-case are reported.
3 Measured Depth of Simulating Tissue is 15.0 cm ± 0.2 cm.
4 Tissue parameters and temperatures are listed on the SAR plot.
5 Battery Type ☒ Standard ☐ Extended ☐ Slim
Batteries are fully charged for all readings.
6 Test Signal Call Mode ☐ Manual Test cord ☒ Base Station Simulator
7 Justification for reduced test configurations: per FCC/OET Supplement C (July, 2001), if the SAR measured at the middle channel for each test configuration (Left, right, cheek/touch, tilt/ear, extended and retracted) is at least 3.0 dB lower than the SAR limit, testing at the high and low channels is optional for such test configuration(s).

11.6 Measurement Results (GSM1900 Head SAR Tilt Slide Up)

Frequency		Modulation	Conducted Power (dBm)		Battery	Phantom Position	Antenna Type	SAR(mW/g)
MHz	Channel		Begin	End				
1 880.0	661 (Mid)	GSM1900	29.96	29.92	Standard	Left Tilt 15°	Intenna	0.189
1 880.0	661 (Mid)	GSM1900	29.96	30.02	Standard	Right Tilt 15°	Intenna	0.261
ANSI/ IEEE C95.1 2005 – Safety Limit Spatial Peak Uncontrolled Exposure/ General Population						**Head 1.6 W/kg (mW/g)** Averaged over 1 gram		

NOTES:

1 The test data reported are the worst-case SAR value with the antenna-head position set in a typical configuration. Test procedures used are according to FCC/OET Bulletin 65, Supplement C [July 2001].
2 All modes of operation were investigated and the worst-case are reported.
3 Measured Depth of Simulating Tissue is 15.0 cm ± 0.2 cm.
4 Tissue parameters and temperatures are listed on the SAR plot.
5 Battery Type ☒ Standard ☐ Extended ☐ Slim
Batteries are fully charged for all readings.
6 Test Signal Call Mode ☐ Manual Test cord ☒ Base Station Simulator
7 Justification for reduced test configurations: per FCC/OET Supplement C (July, 2001), if the SAR measured at the middle channel for each test configuration (Left, right, cheek/touch, tilt/ear, extended and retracted) is at least 3.0 dB lower than the SAR limit, testing at the high and low channels is optional for such test configuration(s).

11.7 Measurement Results (GSM1900 Head SAR Touch Slide down)

Frequency		Modulation	Conducted Power (dBm)		Battery	Phantom Position	Antenna Type	SAR(mW/g)
MHz	Channel		Begin	End				
1 880.0	661 (Mid)	GSM1900	29.96	29.98	Standard	Left Ear	Intenna	0.396
1 880.0	661 (Mid)	GSM1900	29.96	30.08	Standard	Right Ear	Intenna	0.346
ANSI/ IEEE C95.1 2005 – Safety Limit Spatial Peak Uncontrolled Exposure/ General Population						**Head 1.6 W/kg (mW/g)** Averaged over 1 gram		

NOTES:

1 The test data reported are the worst-case SAR value with the antenna-head position set in a typical configuration. Test procedures used are according to FCC/OET Bulletin 65, Supplement C [July 2001].
2 All modes of operation were investigated and the worst-case are reported.
3 Measured Depth of Simulating Tissue is 15.0 cm ± 0.2 cm.
4 Tissue parameters and temperatures are listed on the SAR plot.
5 Battery Type ☒ Standard ☐ Extended ☐ Slim
Batteries are fully charged for all readings.
6 Test Signal Call Mode ☐ Manual Test cord ☒ Base Station Simulator
7 Justification for reduced test configurations: per FCC/OET Supplement C (July, 2001), if the SAR measured at the middle channel for each test configuration (Left, right, cheek/touch, tilt/ear, extended and retracted) is at least 3.0 dB lower than the SAR limit, testing at the high and low channels is optional for such test configuration(s).

11.8 Measurement Results (GSM1900 Head SAR Tilt Slide down)

Frequency		Modulation	Conducted Power (dBm)		Battery	Phantom Position	Antenna Type	SAR(mW/g)
MHz	Channel		Begin	End				
1 880.0	661 (Mid)	GSM1900	29.96	29.92	Standard	Left Tilt 15°	Intenna	0.175
1 880.0	661 (Mid)	GSM1900	29.96	29.84	Standard	Right Tilt 15°	Intenna	0.187
ANSI/ IEEE C95.1 2005 – Safety Limit Spatial Peak Uncontrolled Exposure/ General Population						**Head 1.6 W/kg (mW/g)** Averaged over 1 gram		

NOTES:

1 The test data reported are the worst-case SAR value with the antenna-head position set in a typical configuration. Test procedures used are according to FCC/OET Bulletin 65, Supplement C [July 2001].
2 All modes of operation were investigated and the worst-case are reported.
3 Measured Depth of Simulating Tissue is 15.0 cm ± 0.2 cm.
4 Tissue parameters and temperatures are listed on the SAR plot.
5 Battery Type ☒ Standard ☐ Extended ☐ Slim
Batteries are fully charged for all readings.
6 Test Signal Call Mode ☐ Manual Test cord ☒ Base Station Simulator
7 Justification for reduced test configurations: per FCC/OET Supplement C (July, 2001), if the SAR measured at the middle channel for each test configuration (Left, right, cheek/touch, tilt/ear, extended and retracted) is at least 3.0 dB lower than the SAR limit, testing at the high and low channels is optional for such test configuration(s).

11.9 Measurement Results (GSM850 Body SAR)

Frequency		Modulation	Conducted Power (dBm)		Configuration	Phantom Position	Antenna Type	SAR(mW/g)
MHz	Channel		Begin	End				
836.6	190 (Mid)	GPRS 1Tx	32.67	32.67	Rear	2.0 cm without Holster	Intenna	0.190
836.6	190 (Mid)	GPRS 2Tx	32.57	32.59	Rear	2.0 cm without Holster	Intenna	0.335
836.6	190 (Mid)	GPRS 3Tx	32.54	32.54	Rear	2.0 cm without Holster	Intenna	0.496
836.6	190 (Mid)	GPRS 4Tx	32.50	32.52	Rear	2.0 cm without Holster	Intenna	0.657
836.6	190 (Mid)	GPRS 4Tx	32.50	31.92	Front	2.0 cm without Holster	Intenna	0.356
836.6	190 (Mid)	GSM850	32.67	32.65	Rear	2.0 cm without Holster	Intenna	0.190
ANSI/ IEEE C95.1 2005 – Safety Limit Spatial Peak Uncontrolled Exposure/ General Population						**Body 1.6 W/kg (mW/g)** Averaged over 1 gram		

NOTES:

1 The test data reported are the worst-case SAR value with the antenna-head position set in a typical configuration. Test procedures used are according to FCC/OET Bulletin 65, Supplement C [July 2001].
2 All modes of operation were investigated and the worst-case are reported.
3 Measured Depth of Simulating Tissue is 15.0 cm ± 0.2 cm.
4 Tissue parameters and temperatures are listed on the SAR plot.
5 Battery Type ☒ Standard ☐ Extended ☐ Slim
Batteries are fully charged for all readings.
6 Test Signal Call Mode ☐ Manual Test cord ☒ Base Station Simulator
7 Both side of the phone were tested and the worst-case side is reported.
8 Test Configuration ☐ With Holster ☒ Without Holster
9 Justification for reduced test configurations: per FCC/OET Supplement C (July, 2001), if the SAR measured at the middle channel for each test configuration (Left, right, cheek/touch, tilt/ear, extended and retracted) is at least 3.0 dB lower than the SAR limit, testing at the high and low channels is optional for such test configuration(s).

11.10 Measurement Results (GSM1900 Body SAR)

Frequency		Modulation	Conducted Power (dBm)		Configuration	Phantom Position	Antenna Type	SAR(mW/g)
MHz	Channel		Begin	End				
1 880.0	661 (Mid)	GPRS 1Tx	29.96	30.02	Rear	2.0 cm without Holster	Intenna	0.069
1 880.0	661 (Mid)	GPRS 2Tx	29.82	29.73	Rear	2.0 cm without Holster	Intenna	0.136
1 880.0	661 (Mid)	GPRS 3Tx	29.76	29.76	Rear	2.0 cm without Holster	Intenna	0.305
1 880.0	661 (Mid)	GPRS 4Tx	29.66	29.61	Rear	2.0 cm without Holster	Intenna	0.392
1 880.0	661 (Mid)	GPRS 4Tx	29.66	29.55	Front	2.0 cm without Holster	Intenna	0.181
1 880.0	661 (Mid)	GSM1900	29.96	29.97	Rear	2.0 cm without Holster	Intenna	0.109
ANSI/ IEEE C95.1 2005 – Safety Limit Spatial Peak Uncontrolled Exposure/ General Population						**Body 1.6 W/kg (mW/g)** Averaged over 1 gram		

NOTES:

1 The test data reported are the worst-case SAR value with the antenna-head position set in a typical configuration. Test procedures used are according to FCC/OET Bulletin 65, Supplement C [July 2001].
2 All modes of operation were investigated and the worst-case are reported.
3 Measured Depth of Simulating Tissue is 15.0 cm ± 0.2 cm.
4 Tissue parameters and temperatures are listed on the SAR plot.
5 Battery Type ☒ Standard ☐ Extended ☐ Slim
Batteries are fully charged for all readings.
6 Test Signal Call Mode ☐ Manual Test cord ☒ Base Station Simulator
7 Both side of the phone were tested and the worst-case side is reported.
8 Test Configuration ☐ With Holster ☒ Without Holster
9 Justification for reduced test configurations: per FCC/OET Supplement C (July, 2001), if the SAR measured at the middle channel for each test configuration (Left, right, cheek/touch, tilt/ear, extended and retracted) is at least 3.0 dB lower than the SAR limit, testing at the high and low channels is optional for such test configuration(s).

13. CONCLUSION

The SAR measurement indicates that the EUT complies with the RF radiation exposure limits of the ANSI/ IEEE C95.1 2005.

These measurements are taken to simulate the RF effects exposure under worst-case conditions. Precise laboratory measures were taken to assure repeatability of the tests.

14. REFERENCES

[1] Federal Communications Commission, OET Bulletin 65 (Edition 97-01), Supplement C (Edition 01-01), Evaluating Compliance with FCC Guidelines for Human Exposure to Radio frequency Electromagnetic Fields, July 2001.

[2] IEEE Standards Coordinating Committee 34 – IEEE Std. 1528-2003, IEE Recommended Practice or Determining the Peak Spatial-Average Specific Absorption Rate (SAR) in the Human Body from Wireless Communications Devices.

[3] Federal Communications Commission, ET Docket 93-62, Guidelines for Evaluating the Environmental Effects of Radio frequency Radiation, Aug. 1996.

[4] ANSI/IEEE C95.1 - 1991, American National Standard safety levels with respect to human exposure to radio frequency electromagnetic fields, 300 kHz to 100 GHz, New York: IEEE, Aug. 1992

[5] ANSI/IEEE C95.3 - 1991, IEEE Recommended Practice for the Measurement of Potentially Hazardous Electromagnetic Fields - RF and Microwave, New York: IEEE, 1992.

[6] NCRP, National Council on Radiation Protection and Measurements, Biological Effects and Exposure Criteria for Radio Frequency Electromagnetic Fields, NCRP Report No. 86, 1986. Reprinted Feb. 1995.

[7] T. Schmid, O. Egger, N. Kuster, Automated E-field scanning system for dosimetric assessments, IEEE Transaction on Microwave Theory and Techniques, vol. 44, Jan. 1996, pp. 105-113.

[8] K. Pokovic, T. Schmid, N. Kuster, Robust setup for precise calibration of E-field probes in tissue simulating liquids at mobile communications frequencies, ICECOM97, Oct. 1997, pp. 120-124.

[9]K. Pokoviº, T. Schmid, and N. Kuster, E-field Probe with improved isotropy in brain simulating liquids, Proceedings of the ELMAR, Zadar, Croatia, June 23-25, 1996, pp. 172-175.

[10] Schmid & Partner Engineering AG, Application Note: Data Storage and Evaluation, June 1998, p2.

[11] V. Hombach, K. Meier, M. Burkhardt, E. Kuhn, N. Kuster, The Dependence of EM Energy Absorption upon Human Head Modeling at 900 MHz, IEEE Transaction on Microwave Theory and Techniques, vol. 44 no. 10, Oct. 1996, pp. 1865-1873.

[12] N. Kuster and Q. Balzano, Energy absorption mechanism by biological bodies in the near field of dipole antennas above 300 MHz, IEEE Transaction on Vehicular Technology, vol. 41, no. 1, Feb. 1992, pp. 17-23.

[13] G. Hartsgrove, A. Kraszewski, A. Surowiec, Simulated Biological Materials for Electromagnetic Radiation Absorption Studies, University of Ottawa, Bioelectro magnetics, Canada: 1987, pp. 29-36.

[14] Q. Balzano, O. Garay, T. Manning Jr., Electromagnetic Energy Exposure of Simulated Users of Portable Cellular Telephones, IEEE Transactions on Vehicular Technology, vol. 44, no.3, Aug. 1995.

[15] W. Gander, Computer mathematick, Birkhaeuser, Basel, 1992.

[16] W.H. Press, S.A. Teukolsky, W.T. Vetterling, and B.P. Flannery, Numerical Recepies in C, The Art of Scientific Computing, Second edition, Cambridge University Press, 1992.

[17] Federal Communications Commission, OET Bulletin 65, Evaluating Compliance with FCC Guidelines for Human Exposure to Radiofrequency Electromagnetic Fields. Supplement C, Dec. 1997.

[18] N. Kuster, R. Kastle, T. Schmid, Dosimetric evaluation of mobile communications equipment with known precision, IEEE Transaction on Communications, vol. E80-B, no. 5, May 1997, pp. 645-652.

[19] CENELEC CLC/SC111B, European Prestandard (prENV 50166-2), Human Exposure to Electromagnetic Fields High-frequency: 10 kHz-300 GHz, Jan. 1995.

[20] Prof. Dr. Niels Kuster, ETH, EidgenØssische Technische Hoschschule Zòrich, Dosimetric Evaluation of the Cellular Phone.

[21] SAR Evaluation of Handsets with Multiple Transmitters and Antennas #648474,

Attachment 1. – SAR Test Plots

Test Laboratory:	HCT CO., LTD
EUT Type:	Cellular/PCS GSM/EDGE Phone with Bluetooth (GSM850/ PCS1900)
	GPRS Class 12 and GPRS mode class B(GPRS and GSM, but not simultaneously)
Liquid Temperature:	21.2 ℃
Ambient Temperature:	21.4 ℃
Test Date:	Sep.01, 2009

DUT: GU280; Type: up; Serial: #1

Communication System: GSM 850; Frequency: 836.6 MHz;Duty Cycle: 1:8.3
Medium parameters used (interpolated): f = 836.6 MHz; σ = 0.894 mho/m; ε_r = 42; ρ = 1000 kg/m^3
Phantom section: Left Section ; Measurement SW: DASY4, V4.7 Build 71; Postprocessing SW: SEMCAD, V1.8 Build 176

DASY4 Configuration:
- Probe: ES3DV3 - SN3161; ConvF(5.94, 5.94, 5.94); Calibrated: 2009-07-22
- Sensor-Surface: 4mm (Mechanical Surface Detection)
- Electronics: DAE3 Sn466; Calibrated: 2009-07-21
- Phantom: SAM 835/900 MHz; Type: SAM

Left touch 190/Area Scan (51x101x1): Measurement grid: dx=15mm, dy=15mm

Info: Interpolated medium parameters used for SAR evaluation.
Maximum value of SAR (interpolated) = 0.352 mW/g

Left touch 190/Zoom Scan (5x5x7)/Cube 0: Measurement grid: dx=8mm, dy=8mm, dz=5mm
Reference Value = 7.81 V/m; Power Drift = -0.177 dB
Peak SAR (extrapolated) = 0.457 W/kg
SAR(1 g) = 0.318 mW/g; SAR(10 g) = 0.214 mW/g

Info: Interpolated medium parameters used for SAR evaluation.
Maximum value of SAR (measured) = 0.345 mW/g

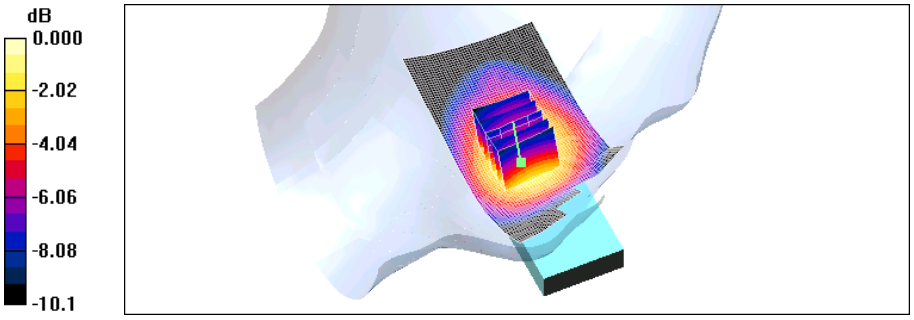

0 dB = 0.345mW/g

Test Laboratory:	HCT CO., LTD
EUT Type:	Cellular/PCS GSM/EDGE Phone with Bluetooth (GSM850/ PCS1900)
	GPRS Class 12 and GPRS mode class B(GPRS and GSM, but not simultaneously)
Liquid Temperature:	21.2 ℃
Ambient Temperature:	21.4 ℃
Test Date:	Sep.01, 2009

DUT: GU280; Type: up; Serial: #1

Communication System: GSM 850; Frequency: 836.6 MHz;Duty Cycle: 1:8.3
Medium parameters used (interpolated): f = 836.6 MHz; σ = 0.894 mho/m; ε_r = 42; ρ = 1000 kg/m^3
Phantom section: Right Section ; Measurement SW: DASY4, V4.7 Build 71; Postprocessing SW: SEMCAD, V1.8 Build 176

DASY4 Configuration:
- Probe: ES3DV3 - SN3161; ConvF(5.94, 5.94, 5.94); Calibrated: 2009-07-22
- Sensor-Surface: 4mm (Mechanical Surface Detection)
- Electronics: DAE3 Sn466; Calibrated: 2009-07-21
- Phantom: SAM 835/900 MHz; Type: SAM

Right touch 190/Area Scan (51x101x1): Measurement grid: dx=15mm, dy=15mm

Info: Interpolated medium parameters used for SAR evaluation.
Maximum value of SAR (interpolated) = 0.300 mW/g

Right touch 190/Zoom Scan (5x5x7)/Cube 0: Measurement grid: dx=8mm, dy=8mm, dz=5mm
Reference Value = 7.19 V/m; Power Drift = -0.023 dB
Peak SAR (extrapolated) = 0.386 W/kg
SAR(1 g) = 0.289 mW/g; SAR(10 g) = 0.204 mW/g

Info: Interpolated medium parameters used for SAR evaluation.
Maximum value of SAR (measured) = 0.310 mW/g

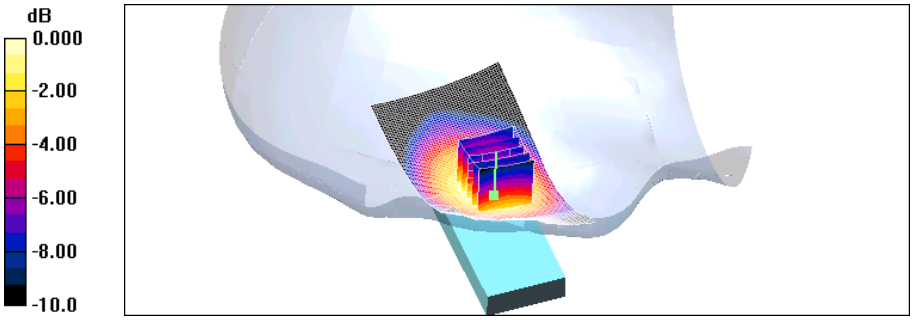

0 dB = 0.310mW/g

Test Laboratory:	HCT CO., LTD
EUT Type:	Cellular/PCS GSM/EDGE Phone with Bluetooth (GSM850/ PCS1900)
	GPRS Class 12 and GPRS mode class B(GPRS and GSM, but not simultaneously)
Liquid Temperature:	21.2 ℃
Ambient Temperature:	21.4 ℃
Test Date:	Sep.01, 2009

DUT: GU280; Type: up; Serial: #1

Communication System: GSM 850; Frequency: 836.6 MHz;Duty Cycle: 1:8.3
Medium parameters used (interpolated): f = 836.6 MHz; σ = 0.894 mho/m; ε_r = 42; ρ = 1000 kg/m^3
Phantom section: Left Section ; Measurement SW: DASY4, V4.7 Build 71; Postprocessing SW: SEMCAD, V1.8 Build 176

DASY4 Configuration:
- Probe: ES3DV3 - SN3161; ConvF(5.94, 5.94, 5.94); Calibrated: 2009-07-22
- Sensor-Surface: 4mm (Mechanical Surface Detection)
- Electronics: DAE3 Sn466; Calibrated: 2009-07-21
- Phantom: SAM 835/900 MHz; Type: SAM

Left tilt 190/Area Scan (51x101x1): Measurement grid: dx=15mm, dy=15mm

Info: Interpolated medium parameters used for SAR evaluation.
Maximum value of SAR (interpolated) = 0.197 mW/g

Left tilt 190/Zoom Scan (5x5x7)/Cube 0: Measurement grid: dx=8mm, dy=8mm, dz=5mm
Reference Value = 12.4 V/m; Power Drift = 0.003 dB
Peak SAR (extrapolated) = 0.266 W/kg
SAR(1 g) = 0.135 mW/g; SAR(10 g) = 0.093 mW/g

Maximum value of SAR (measured) = 0.152 mW/g

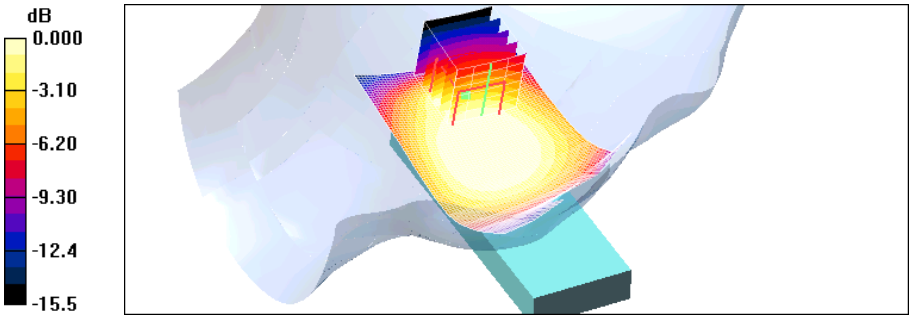

0 dB = 0.152mW/g

Test Laboratory:	HCT CO., LTD
EUT Type:	Cellular/PCS GSM/EDGE Phone with Bluetooth (GSM850/ PCS1900)
	GPRS Class 12 and GPRS mode class B(GPRS and GSM, but not simultaneously)
Liquid Temperature:	21.2 ℃
Ambient Temperature:	21.4 ℃
Test Date:	Sep.01, 2009

DUT: GU280; Type: up; Serial: #1

Communication System: GSM 850; Frequency: 836.6 MHz;Duty Cycle: 1:8.3
Medium parameters used (interpolated): f = 836.6 MHz; σ = 0.894 mho/m; ε_r = 42; ρ = 1000 kg/m^3
Phantom section: Right Section ; Measurement SW: DASY4, V4.7 Build 71; Postprocessing SW: SEMCAD, V1.8 Build 176

DASY4 Configuration:
- Probe: ES3DV3 - SN3161; ConvF(5.94, 5.94, 5.94); Calibrated: 2009-07-22
- Sensor-Surface: 4mm (Mechanical Surface Detection)
- Electronics: DAE3 Sn466; Calibrated: 2009-07-21
- Phantom: SAM 835/900 MHz; Type: SAM

Right tilt 190/Area Scan (51x101x1): Measurement grid: dx=15mm, dy=15mm

Info: Interpolated medium parameters used for SAR evaluation.
Maximum value of SAR (interpolated) = 0.168 mW/g

Right tilt 190/Zoom Scan (5x5x7)/Cube 0: Measurement grid: dx=8mm, dy=8mm, dz=5mm
Reference Value = 11.7 V/m; Power Drift = 0.050 dB
Peak SAR (extrapolated) = 0.205 W/kg
SAR(1 g) = 0.159 mW/g; SAR(10 g) = 0.117 mW/g

Info: Interpolated medium parameters used for SAR evaluation.
Maximum value of SAR (measured) = 0.167 mW/g

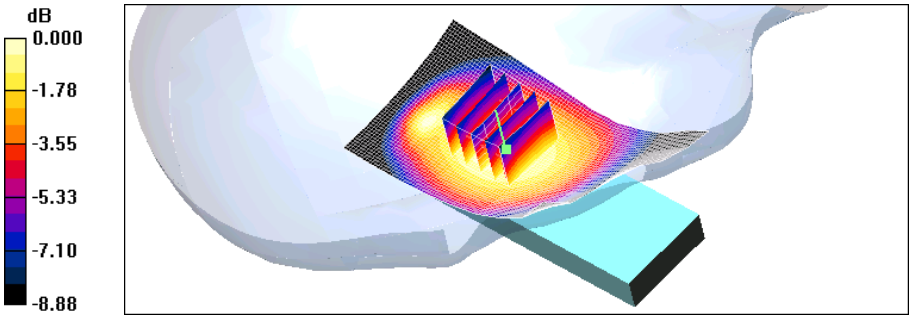

0 dB = 0.167mW/g

Test Laboratory:	HCT CO., LTD
EUT Type:	Cellular/PCS GSM/EDGE Phone with Bluetooth (GSM850/ PCS1900)
	GPRS Class 12 and GPRS mode class B(GPRS and GSM, but not simultaneously)
Liquid Temperature:	21.2 ℃
Ambient Temperature:	21.4 ℃
Test Date:	Sep.01, 2009

DUT: GU280; Type: (body); Serial: #1

Communication System: GSM 850; Frequency: 836.6 MHz;Duty Cycle: 1:8.3
Medium parameters used (interpolated): f = 836.6 MHz; σ = 0.894 mho/m; ε_r = 42; ρ = 1000 kg/m^3
Phantom section: Left Section ; Measurement SW: DASY4, V4.7 Build 71; Postprocessing SW: SEMCAD, V1.8 Build 176

DASY4 Configuration:
- Probe: ES3DV3 - SN3161; ConvF(5.94, 5.94, 5.94); Calibrated: 2009-07-22
- Sensor-Surface: 4mm (Mechanical Surface Detection)
- Electronics: DAE3 Sn466; Calibrated: 2009-07-21
- Phantom: SAM 835/900 MHz; Type: SAM

Left touch 190/Area Scan (51x81x1): Measurement grid: dx=15mm, dy=15mm

Info: Interpolated medium parameters used for SAR evaluation.
Maximum value of SAR (interpolated) = 0.251 mW/g

Left touch 190/Zoom Scan (5x5x7)/Cube 0: Measurement grid: dx=8mm, dy=8mm, dz=5mm
Reference Value = 6.90 V/m; Power Drift = -0.155 dB
Peak SAR (extrapolated) = 0.317 W/kg
SAR(1 g) = 0.220 mW/g; SAR(10 g) = 0.146 mW/g

Info: Interpolated medium parameters used for SAR evaluation.
Maximum value of SAR (measured) = 0.243 mW/g

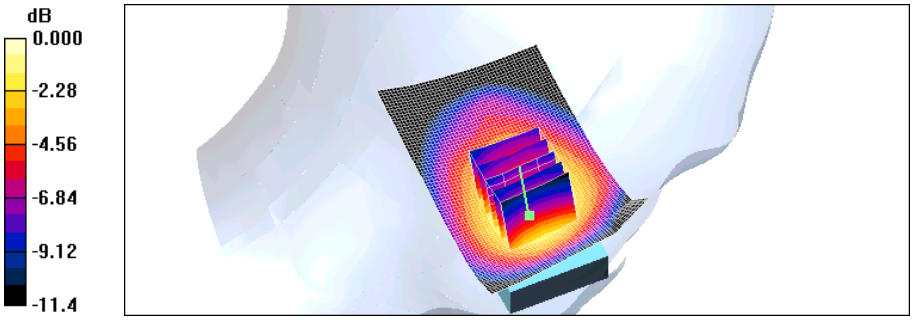

0 dB = 0.243mW/g

Test Laboratory:	HCT CO., LTD
EUT Type:	Cellular/PCS GSM/EDGE Phone with Bluetooth (GSM850/ PCS1900)
	GPRS Class 12 and GPRS mode class B(GPRS and GSM, but not simultaneously)
Liquid Temperature:	21.2 ℃
Ambient Temperature:	21.4 ℃
Test Date:	Sep.01, 2009

DUT: GU280; Type: (body); Serial: #1

Communication System: GSM 850; Frequency: 836.6 MHz;Duty Cycle: 1:8.3
Medium parameters used (interpolated): f = 836.6 MHz; σ = 0.894 mho/m; ε_r = 42; ρ = 1000 kg/m^3
Phantom section: Right Section ; Measurement SW: DASY4, V4.7 Build 71; Postprocessing SW: SEMCAD, V1.8 Build 176

DASY4 Configuration:
- Probe: ES3DV3 - SN3161; ConvF(5.94, 5.94, 5.94); Calibrated: 2009-07-22
- Sensor-Surface: 4mm (Mechanical Surface Detection)
- Electronics: DAE3 Sn466; Calibrated: 2009-07-21
- Phantom: SAM 835/900 MHz; Type: SAM

Right touch 190/Area Scan (51x81x1): Measurement grid: dx=15mm, dy=15mm

Info: Interpolated medium parameters used for SAR evaluation.
Maximum value of SAR (interpolated) = 0.232 mW/g

Right touch 190/Zoom Scan (5x5x7)/Cube 0: Measurement grid: dx=8mm, dy=8mm, dz=5mm
Reference Value = 6.69 V/m; Power Drift = -0.166 dB
Peak SAR (extrapolated) = 0.312 W/kg
SAR(1 g) = 0.215 mW/g; SAR(10 g) = 0.144 mW/g

Info: Interpolated medium parameters used for SAR evaluation.
Maximum value of SAR (measured) = 0.237 mW/g

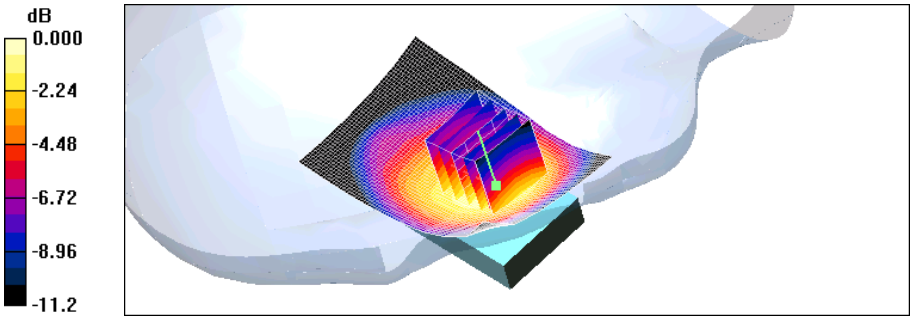

0 dB = 0.237mW/g

Test Laboratory:	HCT CO., LTD
EUT Type:	Cellular/PCS GSM/EDGE Phone with Bluetooth (GSM850/ PCS1900)
	GPRS Class 12 and GPRS mode class B(GPRS and GSM, but not simultaneously)
Liquid Temperature:	21.2 ℃
Ambient Temperature:	21.4 ℃
Test Date:	Sep.01, 2009

DUT: GU280; Type: (body); Serial: #1

Communication System: GSM 850; Frequency: 836.6 MHz;Duty Cycle: 1:8.3
Medium parameters used (interpolated): f = 836.6 MHz; σ = 0.894 mho/m; ε_r = 42; ρ = 1000 kg/m^3
Phantom section: Left Section ; Measurement SW: DASY4, V4.7 Build 71; Postprocessing SW: SEMCAD, V1.8 Build 176

DASY4 Configuration:
- Probe: ES3DV3 - SN3161; ConvF(5.94, 5.94, 5.94); Calibrated: 2009-07-22
- Sensor-Surface: 4mm (Mechanical Surface Detection)
- Electronics: DAE3 Sn466; Calibrated: 2009-07-21
- Phantom: SAM 835/900 MHz; Type: SAM

Left tilt 190/Area Scan (51x81x1): Measurement grid: dx=15mm, dy=15mm

Info: Interpolated medium parameters used for SAR evaluation.
Maximum value of SAR (interpolated) = 0.158 mW/g

Left tilt 190/Zoom Scan (5x5x7)/Cube 0: Measurement grid: dx=8mm, dy=8mm, dz=5mm
Reference Value = 10.6 V/m; Power Drift = 0.117 dB
Peak SAR (extrapolated) = 0.192 W/kg
SAR(1 g) = 0.152 mW/g; SAR(10 g) = 0.113 mW/g

Info: Interpolated medium parameters used for SAR evaluation.
Maximum value of SAR (measured) = 0.160 mW/g

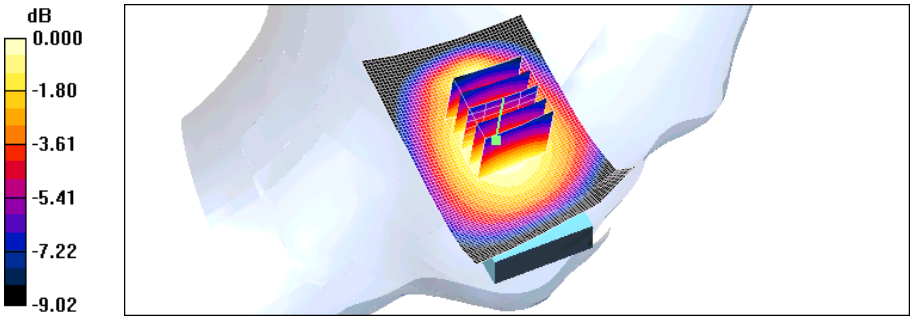

0 dB = 0.160mW/g

Test Laboratory:	HCT CO., LTD
EUT Type:	Cellular/PCS GSM/EDGE Phone with Bluetooth (GSM850/ PCS1900)
	GPRS Class 12 and GPRS mode class B(GPRS and GSM, but not simultaneously)
Liquid Temperature:	21.2 ℃
Ambient Temperature:	21.4 ℃
Test Date:	Sep.01, 2009

DUT: GU280; Type: (body); Serial: #1

Communication System: GSM 850; Frequency: 836.6 MHz;Duty Cycle: 1:8.3
Medium parameters used (interpolated): f = 836.6 MHz; σ = 0.894 mho/m; ε_r = 42; ρ = 1000 kg/m^3
Phantom section: Right Section ; Measurement SW: DASY4, V4.7 Build 71; Postprocessing SW: SEMCAD, V1.8 Build 176

DASY4 Configuration:
- Probe: ES3DV3 - SN3161; ConvF(5.94, 5.94, 5.94); Calibrated: 2009-07-22
- Sensor-Surface: 4mm (Mechanical Surface Detection)
- Electronics: DAE3 Sn466; Calibrated: 2009-07-21
- Phantom: SAM 835/900 MHz; Type: SAM

Right tilt 190/Area Scan (51x81x1): Measurement grid: dx=15mm, dy=15mm

Info: Interpolated medium parameters used for SAR evaluation.
Maximum value of SAR (interpolated) = 0.154 mW/g

Right tilt 190/Zoom Scan (5x5x7)/Cube 0: Measurement grid: dx=8mm, dy=8mm, dz=5mm
Reference Value = 10.6 V/m; Power Drift = 0.048 dB
Peak SAR (extrapolated) = 0.186 W/kg
SAR(1 g) = 0.147 mW/g; SAR(10 g) = 0.108 mW/g

Info: Interpolated medium parameters used for SAR evaluation.
Maximum value of SAR (measured) = 0.156 mW/g

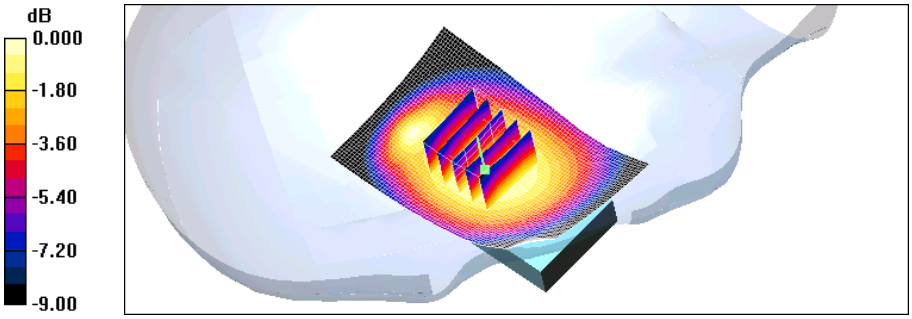

0 dB = 0.156mW/g

Test Laboratory:	HCT CO., LTD
EUT Type:	Cellular/PCS GSM/EDGE Phone with Bluetooth (GSM850/ PCS1900)
	GPRS Class 12 and GPRS mode class B(GPRS and GSM, but not simultaneously)
Liquid Temperature:	21.3 ℃
Ambient Temperature:	21.5 ℃
Test Date:	Sep.02, 2009

DUT: GU280; Type: up; Serial: #1

Communication System: GSM 1900; Frequency: 1880 MHz;Duty Cycle: 1:8.3
Medium parameters used: f = 1880 MHz; σ = 1.38 mho/m; ε_r = 39.3; ρ = 1000 kg/m^3
Phantom section: Left Section ; Measurement SW: DASY4, V4.7 Build 71; Postprocessing SW: SEMCAD, V1.8 Build 176

DASY4 Configuration:
- Probe: ES3DV3 - SN3161; ConvF(4.89, 4.89, 4.89); Calibrated: 2009-07-22
- Sensor-Surface: 4mm (Mechanical Surface Detection)
- Electronics: DAE3 Sn466; Calibrated: 2009-07-21
- Phantom: SAM 1800/1900 MHz; Type: SAM

Left touch 661/Area Scan (51x101x1): Measurement grid: dx=15mm, dy=15mm
Maximum value of SAR (interpolated) = 0.782 mW/g

Left touch 661/Zoom Scan (5x5x7)/Cube 0: Measurement grid: dx=8mm, dy=8mm, dz=5mm
Reference Value = 7.40 V/m; Power Drift = -0.02 dB
Peak SAR (extrapolated) = 1.15 W/kg
SAR(1 g) = 0.706 mW/g; SAR(10 g) = 0.402 mW/g
Maximum value of SAR (measured) = 0.781 mW/g

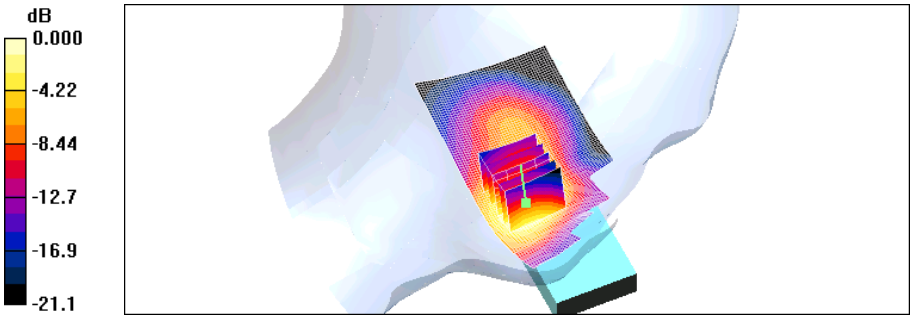

0 dB = 0.781mW/g

Test Laboratory:	HCT CO., LTD
EUT Type:	Cellular/PCS GSM/EDGE Phone with Bluetooth (GSM850/ PCS1900)
	GPRS Class 12 and GPRS mode class B(GPRS and GSM, but not simultaneously)
Liquid Temperature:	21.3 ℃
Ambient Temperature:	21.5 ℃
Test Date:	Sep.02, 2009

DUT: GU280; Type: up; Serial: #1

Communication System: GSM 1900; Frequency: 1880 MHz;Duty Cycle: 1:8.3
Medium parameters used: f = 1880 MHz; σ = 1.38 mho/m; ε_r = 39.3; ρ = 1000 kg/m^3
Phantom section: Right Section ; Measurement SW: DASY4, V4.7 Build 71; Postprocessing SW: SEMCAD, V1.8 Build 176

DASY4 Configuration:
- Probe: ES3DV3 - SN3161; ConvF(4.89, 4.89, 4.89); Calibrated: 2009-07-22
- Sensor-Surface: 4mm (Mechanical Surface Detection)
- Electronics: DAE3 Sn466; Calibrated: 2009-07-21
- Phantom: SAM 1800/1900 MHz; Type: SAM

Right touch 661/Area Scan (51x101x1): Measurement grid: dx=15mm, dy=15mm
Maximum value of SAR (interpolated) = 0.600 mW/g

Right touch 661/Zoom Scan (5x5x7)/Cube 0: Measurement grid: dx=8mm, dy=8mm, dz=5mm
Reference Value = 8.28 V/m; Power Drift = -0.05 dB
Peak SAR (extrapolated) = 0.831 W/kg
SAR(1 g) = 0.524 mW/g; SAR(10 g) = 0.310 mW/g
Maximum value of SAR (measured) = 0.578 mW/g

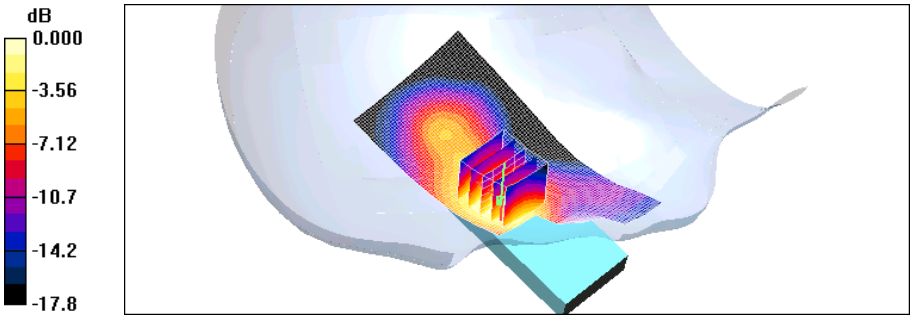

0 dB = 0.578mW/g

Test Laboratory:	HCT CO., LTD
EUT Type:	Cellular/PCS GSM/EDGE Phone with Bluetooth (GSM850/ PCS1900)
	GPRS Class 12 and GPRS mode class B(GPRS and GSM, but not simultaneously)
Liquid Temperature:	21.3 ℃
Ambient Temperature:	21.5 ℃
Test Date:	Sep.02, 2009

DUT: GU280; Type: up; Serial: #1

Communication System: GSM 1900; Frequency: 1880 MHz;Duty Cycle: 1:8.3
Medium parameters used: f = 1880 MHz; σ = 1.38 mho/m; ε_r = 39.3; ρ = 1000 kg/m^3
Phantom section: Left Section ; Measurement SW: DASY4, V4.7 Build 71; Postprocessing SW: SEMCAD, V1.8 Build 176

DASY4 Configuration:
- Probe: ES3DV3 - SN3161; ConvF(4.89, 4.89, 4.89); Calibrated: 2009-07-22
- Sensor-Surface: 4mm (Mechanical Surface Detection)
- Electronics: DAE3 Sn466; Calibrated: 2009-07-21
- Phantom: SAM 1800/1900 MHz; Type: SAM

Left tilt 661/Area Scan (51x101x1): Measurement grid: dx=15mm, dy=15mm
Maximum value of SAR (interpolated) = 0.228 mW/g

Left tilt 661/Zoom Scan (5x5x7)/Cube 0: Measurement grid: dx=8mm, dy=8mm, dz=5mm
Reference Value = 11.4 V/m; Power Drift = -0.039 dB
Peak SAR (extrapolated) = 0.285 W/kg
SAR(1 g) = 0.189 mW/g; SAR(10 g) = 0.118 mW/g
Maximum value of SAR (measured) = 0.199 mW/g

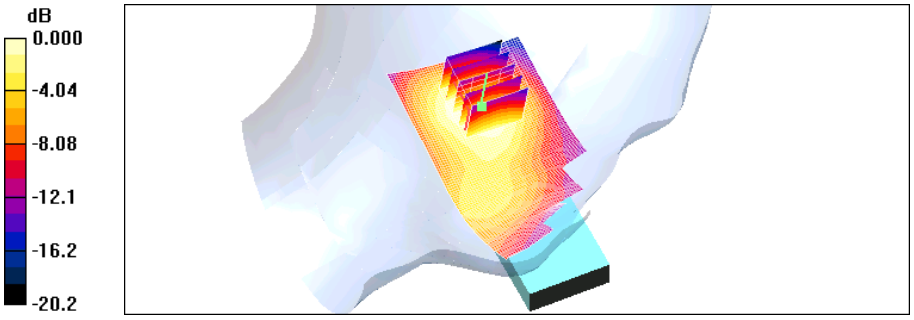

0 dB = 0.199mW/g

Test Laboratory:	HCT CO., LTD
EUT Type:	Cellular/PCS GSM/EDGE Phone with Bluetooth (GSM850/ PCS1900)
	GPRS Class 12 and GPRS mode class B(GPRS and GSM, but not simultaneously)
Liquid Temperature:	21.3 ℃
Ambient Temperature:	21.5 ℃
Test Date:	Sep.02, 2009

DUT: GU280; Type: up; Serial: #1

Communication System: GSM 1900; Frequency: 1880 MHz;Duty Cycle: 1:8.3
Medium parameters used: f = 1880 MHz; σ = 1.38 mho/m; ε_r = 39.3; ρ = 1000 kg/m^3
Phantom section: Right Section ; Measurement SW: DASY4, V4.7 Build 71; Postprocessing SW: SEMCAD, V1.8 Build 176

DASY4 Configuration:
- Probe: ES3DV3 - SN3161; ConvF(4.89, 4.89, 4.89); Calibrated: 2009-07-22
- Sensor-Surface: 4mm (Mechanical Surface Detection)
- Electronics: DAE3 Sn466; Calibrated: 2009-07-21
- Phantom: SAM 1800/1900 MHz; Type: SAM

Right tilt 661/Area Scan (51x101x1): Measurement grid: dx=15mm, dy=15mm
Maximum value of SAR (interpolated) = 0.280 mW/g

Right tilt 661/Zoom Scan (5x5x7)/Cube 0: Measurement grid: dx=8mm, dy=8mm, dz=5mm
Reference Value = 12.5 V/m; Power Drift = 0.055 dB
Peak SAR (extrapolated) = 0.430 W/kg
SAR(1 g) = 0.261 mW/g; SAR(10 g) = 0.153 mW/g
Maximum value of SAR (measured) = 0.275 mW/g

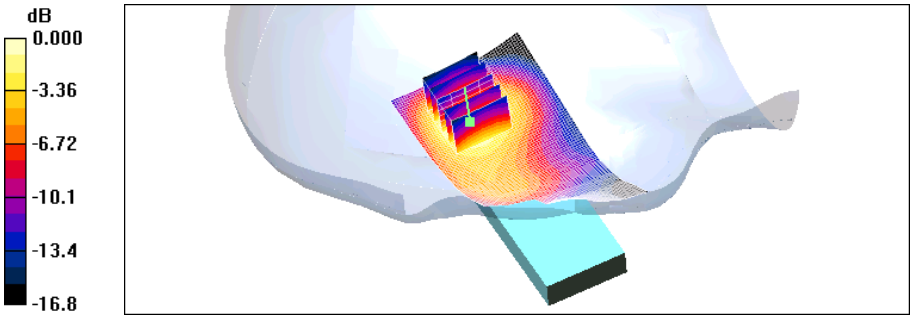

0 dB = 0.275mW/g

Test Laboratory:	HCT CO., LTD
EUT Type:	Cellular/PCS GSM/EDGE Phone with Bluetooth (GSM850/ PCS1900)
	GPRS Class 12 and GPRS mode class B(GPRS and GSM, but not simultaneously)
Liquid Temperature:	21.3 ℃
Ambient Temperature:	21.5 ℃
Test Date:	Sep.02, 2009

DUT: GU280; Type: (body); Serial: #1

Communication System: GSM 1900; Frequency: 1880 MHz;Duty Cycle: 1:8.3
Medium parameters used: f = 1880 MHz; σ = 1.38 mho/m; ε_r = 39.3; ρ = 1000 kg/m^3
Phantom section: Left Section ; Measurement SW: DASY4, V4.7 Build 71; Postprocessing SW: SEMCAD, V1.8 Build 176

DASY4 Configuration:
- Probe: ES3DV3 - SN3161; ConvF(4.89, 4.89, 4.89); Calibrated: 2009-07-22
- Sensor-Surface: 4mm (Mechanical Surface Detection)
- Electronics: DAE3 Sn466; Calibrated: 2009-07-21
- Phantom: SAM 1800/1900 MHz; Type: SAM

Left touch 661/Area Scan (51x81x1): Measurement grid: dx=15mm, dy=15mm
Maximum value of SAR (interpolated) = 0.403 mW/g

Left touch 661/Zoom Scan (5x5x7)/Cube 0: Measurement grid: dx=8mm, dy=8mm, dz=5mm
Reference Value = 8.42 V/m; Power Drift = -0.02 dB
Peak SAR (extrapolated) = 0.694 W/kg
SAR(1 g) = 0.396 mW/g; SAR(10 g) = 0.208 mW/g
Maximum value of SAR (measured) = 0.438 mW/g

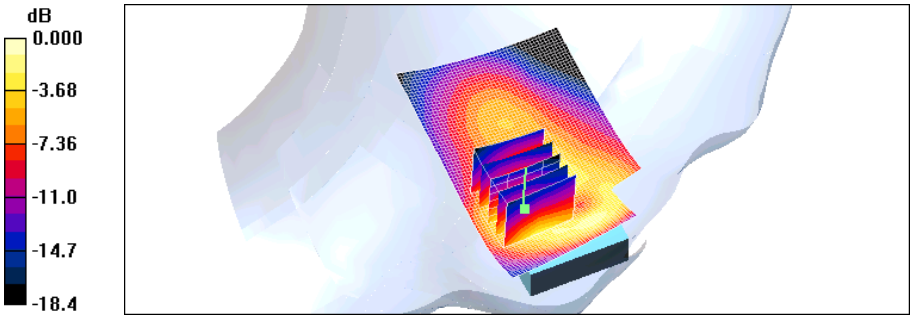

0 dB = 0.438mW/g

Test Laboratory:	HCT CO., LTD
EUT Type:	Cellular/PCS GSM/EDGE Phone with Bluetooth (GSM850/ PCS1900)
	GPRS Class 12 and GPRS mode class B(GPRS and GSM, but not simultaneously)
Liquid Temperature:	21.3 ℃
Ambient Temperature:	21.5 ℃
Test Date:	Sep.02, 2009

DUT: GU280; Type: (body); Serial: #1

Communication System: GSM 1900; Frequency: 1880 MHz;Duty Cycle: 1:8.3
Medium parameters used: f = 1880 MHz; σ = 1.38 mho/m; ε_r = 39.3; ρ = 1000 kg/m^3
Phantom section: Right Section ; Measurement SW: DASY4, V4.7 Build 71; Postprocessing SW: SEMCAD, V1.8 Build 176

DASY4 Configuration:
- Probe: ES3DV3 - SN3161; ConvF(4.89, 4.89, 4.89); Calibrated: 2009-07-22
- Sensor-Surface: 4mm (Mechanical Surface Detection)
- Electronics: DAE3 Sn466; Calibrated: 2009-07-21
- Phantom: SAM 1800/1900 MHz; Type: SAM

Right touch 661/Area Scan (51x81x1): Measurement grid: dx=15mm, dy=15mm
Maximum value of SAR (interpolated) = 0.368 mW/g

Right touch 661/Zoom Scan (5x5x7)/Cube 0: Measurement grid: dx=8mm, dy=8mm, dz=5mm
Reference Value = 9.21 V/m; Power Drift = -0.117 dB
Peak SAR (extrapolated) = 0.583 W/kg
SAR(1 g) = 0.346 mW/g; SAR(10 g) = 0.202 mW/g
Maximum value of SAR (measured) = 0.361 mW/g

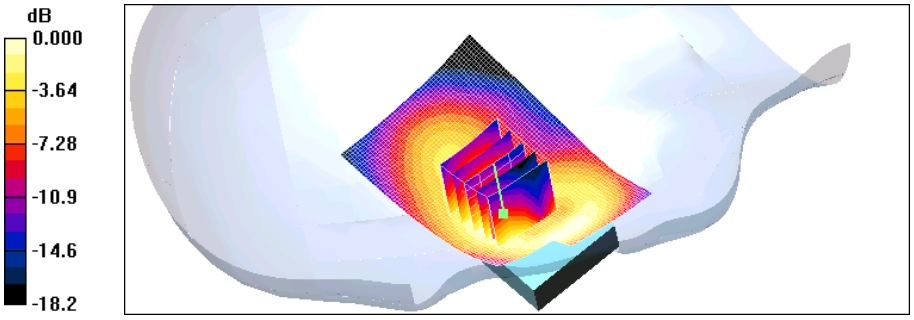

0 dB = 0.361mW/g

Test Laboratory:	HCT CO., LTD
EUT Type:	Cellular/PCS GSM/EDGE Phone with Bluetooth (GSM850/ PCS1900)
	GPRS Class 12 and GPRS mode class B(GPRS and GSM, but not simultaneously)
Liquid Temperature:	21.3 ℃
Ambient Temperature:	21.5 ℃
Test Date:	Sep.02, 2009

DUT: GU280; Type: (body); Serial: #1

Communication System: GSM 1900; Frequency: 1880 MHz;Duty Cycle: 1:8.3
Medium parameters used: f = 1880 MHz; σ = 1.38 mho/m; ε_r = 39.3; ρ = 1000 kg/m^3
Phantom section: Left Section ; Measurement SW: DASY4, V4.7 Build 71; Postprocessing SW: SEMCAD, V1.8 Build 176

DASY4 Configuration:
- Probe: ES3DV3 - SN3161; ConvF(4.89, 4.89, 4.89); Calibrated: 2009-07-22
- Sensor-Surface: 4mm (Mechanical Surface Detection)
- Electronics: DAE3 Sn466; Calibrated: 2009-07-21
- Phantom: SAM 1800/1900 MHz; Type: SAM

Left tilt 661/Area Scan (51x81x1): Measurement grid: dx=15mm, dy=15mm
Maximum value of SAR (interpolated) = 0.206 mW/g

Left tilt 661/Zoom Scan (5x5x7)/Cube 0: Measurement grid: dx=8mm, dy=8mm, dz=5mm
Reference Value = 12.0 V/m; Power Drift = -0.044 dB
Peak SAR (extrapolated) = 0.284 W/kg
SAR(1 g) = 0.175 mW/g; SAR(10 g) = 0.101 mW/g
Maximum value of SAR (measured) = 0.193 mW/g

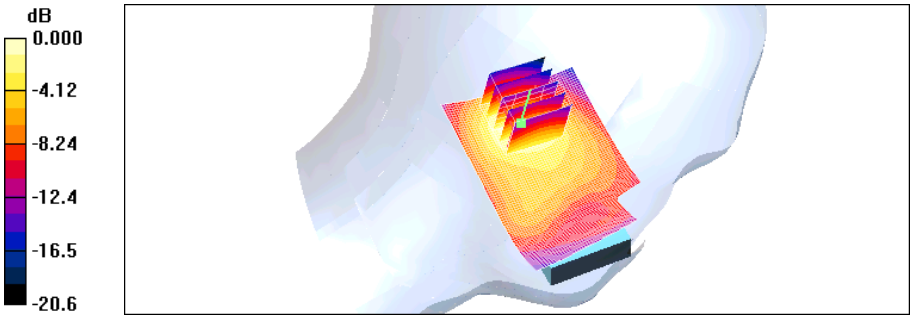

0 dB = 0.193mW/g

Test Laboratory:	HCT CO., LTD
EUT Type:	Cellular/PCS GSM/EDGE Phone with Bluetooth (GSM850/ PCS1900)
	GPRS Class 12 and GPRS mode class B(GPRS and GSM, but not simultaneously)
Liquid Temperature:	21.3 ℃
Ambient Temperature:	21.5 ℃
Test Date:	Sep.02, 2009

DUT: GU280; Type: (body); Serial: #1

Communication System: GSM 1900; Frequency: 1880 MHz;Duty Cycle: 1:8.3
Medium parameters used: f = 1880 MHz; σ = 1.38 mho/m; ε_r = 39.3; ρ = 1000 kg/m^3
Phantom section: Right Section ; Measurement SW: DASY4, V4.7 Build 71; Postprocessing SW: SEMCAD, V1.8 Build 176

DASY4 Configuration:
- Probe: ES3DV3 - SN3161; ConvF(4.89, 4.89, 4.89); Calibrated: 2009-07-22
- Sensor-Surface: 4mm (Mechanical Surface Detection)
- Electronics: DAE3 Sn466; Calibrated: 2009-07-21
- Phantom: SAM 1800/1900 MHz; Type: SAM

Right tilt 661/Area Scan (51x81x1): Measurement grid: dx=15mm, dy=15mm
Maximum value of SAR (interpolated) = 0.213 mW/g

Right tilt 661/Zoom Scan (5x5x7)/Cube 0: Measurement grid: dx=8mm, dy=8mm, dz=5mm
Reference Value = 12.2 V/m; Power Drift = -0.120 dB
Peak SAR (extrapolated) = 0.300 W/kg
SAR(1 g) = 0.187 mW/g; SAR(10 g) = 0.109 mW/g
Maximum value of SAR (measured) = 0.205 mW/g

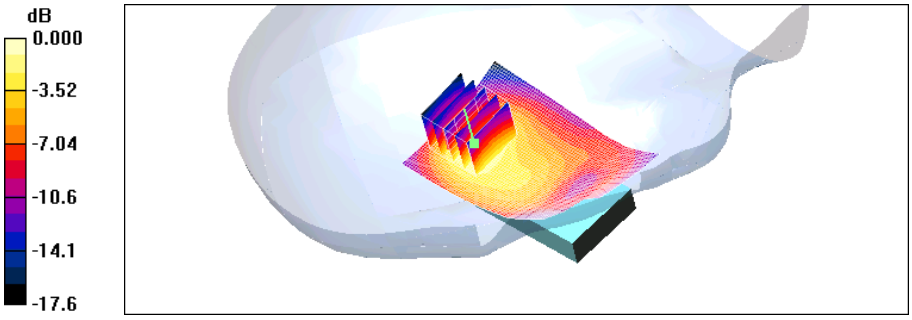

0 dB = 0.205mW/g

Test Laboratory:	HCT CO., LTD
EUT Type:	Cellular/PCS GSM/EDGE Phone with Bluetooth (GSM850/ PCS1900)
	GPRS Class 12 and GPRS mode class B(GPRS and GSM, but not simultaneously)
Liquid Temperature:	21.2 ℃
Ambient Temperature:	21.4 ℃
Test Date:	Sep.01, 2009

DUT: GU280; Type: (body); Serial: #1

Communication System: GSM 850; Frequency: 836.6 MHz;Duty Cycle: 1:8.3
Medium parameters used (interpolated): f = 836.6 MHz; σ = 0.995 mho/m; ε_r = 54; ρ = 1000 kg/m^3
Phantom section: Flat Section ; Measurement SW: DASY4, V4.7 Build 71; Postprocessing SW: SEMCAD, V1.8 Build 176

DASY4 Configuration:
- Probe: ES3DV3 - SN3161; ConvF(5.83, 5.83, 5.83); Calibrated: 2009-07-22
- Sensor-Surface: 4mm (Mechanical Surface Detection)
- Electronics: DAE3 Sn466; Calibrated: 2009-07-21
- Phantom: SAM 835/900 MHz; Type: SAM

Body 190/Area Scan (51x81x1): Measurement grid: dx=15mm, dy=15mm

Info: Interpolated medium parameters used for SAR evaluation.
Maximum value of SAR (interpolated) = 0.204 mW/g

Body 190/Zoom Scan (5x5x7)/Cube 0: Measurement grid: dx=8mm, dy=8mm, dz=5mm
Reference Value = 9.49 V/m; Power Drift = 0.002 dB
Peak SAR (extrapolated) = 0.256 W/kg
SAR(1 g) = 0.190 mW/g; SAR(10 g) = 0.133 mW/g

Info: Interpolated medium parameters used for SAR evaluation.
Maximum value of SAR (measured) = 0.202 mW/g

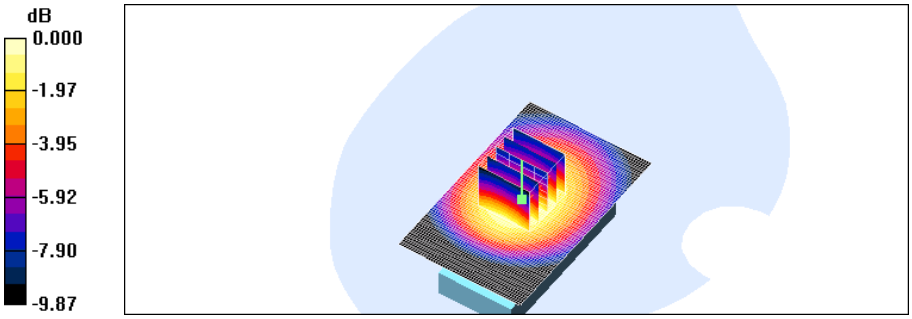

0 dB = 0.202mW/g

Test Laboratory:	HCT CO., LTD
EUT Type:	Cellular/PCS GSM/EDGE Phone with Bluetooth (GSM850/ PCS1900)
	GPRS Class 12 and GPRS mode class B(GPRS and GSM, but not simultaneously)
Liquid Temperature:	21.2 ℃
Ambient Temperature:	21.4 ℃
Test Date:	Sep.01, 2009

DUT: GU280; Type: (body); Serial: #1

Communication System: GSM 850; Frequency: 836.6 MHz;Duty Cycle: 1:4.15
Medium parameters used (interpolated): f = 836.6 MHz; σ = 0.995 mho/m; ε_r = 54; ρ = 1000 kg/m^3
Phantom section: Flat Section ; Measurement SW: DASY4, V4.7 Build 71; Postprocessing SW: SEMCAD, V1.8 Build 176

DASY4 Configuration:
- Probe: ES3DV3 - SN3161; ConvF(5.83, 5.83, 5.83); Calibrated: 2009-07-22
- Sensor-Surface: 4mm (Mechanical Surface Detection)
- Electronics: DAE3 Sn466; Calibrated: 2009-07-21
- Phantom: SAM 835/900 MHz; Type: SAM

Body 190/Area Scan (51x81x1): Measurement grid: dx=15mm, dy=15mm

Info: Interpolated medium parameters used for SAR evaluation.
Maximum value of SAR (interpolated) = 0.355 mW/g

Body 190/Zoom Scan (5x5x7)/Cube 0: Measurement grid: dx=8mm, dy=8mm, dz=5mm
Reference Value = 11.8 V/m; Power Drift = 0.024 dB
Peak SAR (extrapolated) = 0.455 W/kg
SAR(1 g) = 0.335 mW/g; SAR(10 g) = 0.236 mW/g

Info: Interpolated medium parameters used for SAR evaluation.
Maximum value of SAR (measured) = 0.357 mW/g

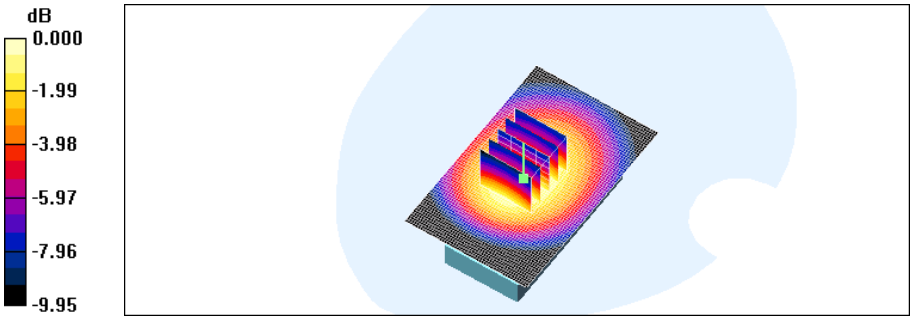

0 dB = 0.357mW/g

Test Laboratory:	HCT CO., LTD
EUT Type:	Cellular/PCS GSM/EDGE Phone with Bluetooth (GSM850/ PCS1900)
	GPRS Class 12 and GPRS mode class B(GPRS and GSM, but not simultaneously)
Liquid Temperature:	21.2 ℃
Ambient Temperature:	21.4 ℃
Test Date:	Sep.01, 2009

DUT: GU280; Type: (body); Serial: #1

Communication System: GSM 850; Frequency: 836.6 MHz;Duty Cycle: 1:2.77
Medium parameters used (interpolated): f = 836.6 MHz; σ = 0.995 mho/m; ε_r = 54; ρ = 1000 kg/m^3
Phantom section: Flat Section ; Measurement SW: DASY4, V4.7 Build 71; Postprocessing SW: SEMCAD, V1.8 Build 176

DASY4 Configuration:
- Probe: ES3DV3 - SN3161; ConvF(5.83, 5.83, 5.83); Calibrated: 2009-07-22
- Sensor-Surface: 4mm (Mechanical Surface Detection)
- Electronics: DAE3 Sn466; Calibrated: 2009-07-21
- Phantom: SAM 835/900 MHz; Type: SAM

Body 190/Area Scan (51x81x1): Measurement grid: dx=15mm, dy=15mm

Info: Interpolated medium parameters used for SAR evaluation.
Maximum value of SAR (interpolated) = 0.527 mW/g

Body 190/Zoom Scan (5x5x7)/Cube 0: Measurement grid: dx=8mm, dy=8mm, dz=5mm
Reference Value = 14.3 V/m; Power Drift = 0.001 dB
Peak SAR (extrapolated) = 0.672 W/kg
SAR(1 g) = 0.496 mW/g; SAR(10 g) = 0.349 mW/g

Info: Interpolated medium parameters used for SAR evaluation.
Maximum value of SAR (measured) = 0.532 mW/g

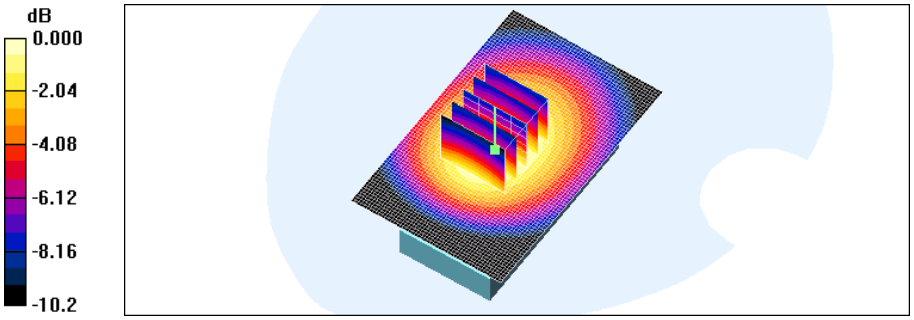

0 dB = 0.532mW/g

Test Laboratory:	HCT CO., LTD
EUT Type:	Cellular/PCS GSM/EDGE Phone with Bluetooth (GSM850/ PCS1900)
	GPRS Class 12 and GPRS mode class B(GPRS and GSM, but not simultaneously)
Liquid Temperature:	21.2 ℃
Ambient Temperature:	21.4 ℃
Test Date:	Sep.01, 2009

DUT: GU280; Type: (body); Serial: #1

Communication System: GSM 850; Frequency: 836.6 MHz;Duty Cycle: 1:2.075
Medium parameters used (interpolated): f = 836.6 MHz; σ = 0.995 mho/m; ε_r = 54; ρ = 1000 kg/m^3
Phantom section: Flat Section ; Measurement SW: DASY4, V4.7 Build 71; Postprocessing SW: SEMCAD, V1.8 Build 176

DASY4 Configuration:
- Probe: ES3DV3 - SN3161; ConvF(5.83, 5.83, 5.83); Calibrated: 2009-07-22
- Sensor-Surface: 4mm (Mechanical Surface Detection)
- Electronics: DAE3 Sn466; Calibrated: 2009-07-21
- Phantom: SAM 835/900 MHz; Type: SAM

Body 190/Area Scan (51x81x1): Measurement grid: dx=15mm, dy=15mm

Info: Interpolated medium parameters used for SAR evaluation.
Maximum value of SAR (interpolated) = 0.706 mW/g

Body 190/Zoom Scan (5x5x7)/Cube 0: Measurement grid: dx=8mm, dy=8mm, dz=5mm
Reference Value = 16.5 V/m; Power Drift = 0.025 dB
Peak SAR (extrapolated) = 0.892 W/kg
SAR(1 g) = 0.657 mW/g; SAR(10 g) = 0.464 mW/g

Info: Interpolated medium parameters used for SAR evaluation.
Maximum value of SAR (measured) = 0.695 mW/g

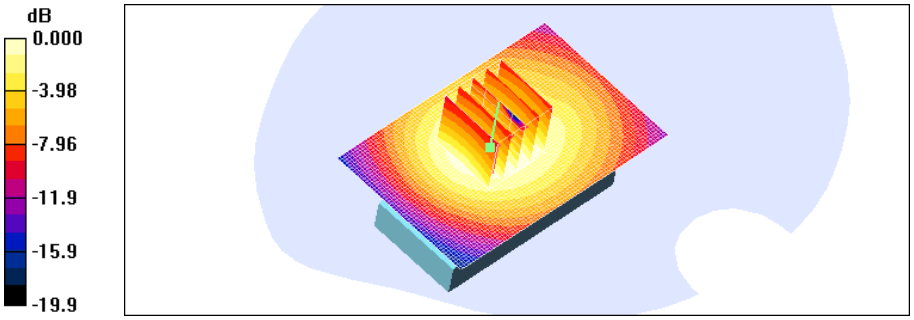

0 dB = 0.695mW/g

Test Laboratory:	HCT CO., LTD
EUT Type:	Cellular/PCS GSM/EDGE Phone with Bluetooth (GSM850/ PCS1900)
	GPRS Class 12 and GPRS mode class B(GPRS and GSM, but not simultaneously)
Liquid Temperature:	21.2 ℃
Ambient Temperature:	21.4 ℃
Test Date:	Sep.01, 2009

DUT: GU280; Type: (body); Serial: #1

Communication System: GSM 850; Frequency: 836.6 MHz;Duty Cycle: 1:2.075
Medium parameters used (interpolated): f = 836.6 MHz; σ = 0.995 mho/m; ε_r = 54; ρ = 1000 kg/m^3
Phantom section: Flat Section ; Measurement SW: DASY4, V4.7 Build 71; Postprocessing SW: SEMCAD, V1.8 Build 176

DASY4 Configuration:
- Probe: ES3DV3 - SN3161; ConvF(5.83, 5.83, 5.83); Calibrated: 2009-07-22
- Sensor-Surface: 4mm (Mechanical Surface Detection)
- Electronics: DAE3 Sn466; Calibrated: 2009-07-21
- Phantom: SAM 835/900 MHz; Type: SAM

Body 190/Area Scan (51x81x1): Measurement grid: dx=15mm, dy=15mm

Info: Interpolated medium parameters used for SAR evaluation.
Maximum value of SAR (interpolated) = 0.396 mW/g

Body 190/Zoom Scan (5x5x7)/Cube 0: Measurement grid: dx=8mm, dy=8mm, dz=5mm
Reference Value = 13.9 V/m; Power Drift = -0.08 dB
Peak SAR (extrapolated) = 0.462 W/kg
SAR(1 g) = 0.356 mW/g; SAR(10 g) = 0.261 mW/g

Info: Interpolated medium parameters used for SAR evaluation.
Maximum value of SAR (measured) = 0.379 mW/g

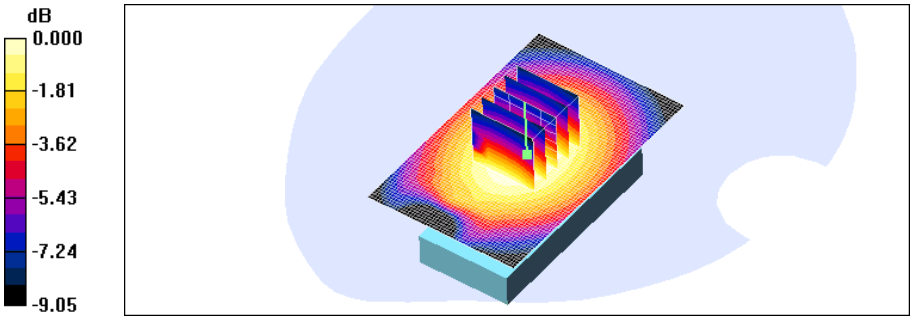

0 dB = 0.379mW/g

Test Laboratory:	HCT CO., LTD
EUT Type:	Cellular/PCS GSM/EDGE Phone with Bluetooth (GSM850/ PCS1900)
	GPRS Class 12 and GPRS mode class B(GPRS and GSM, but not simultaneously)
Liquid Temperature:	21.2 ℃
Ambient Temperature:	21.4 ℃
Test Date:	Sep.01, 2009

DUT: GU280; Type: (body); Serial: #1

Communication System: GSM 850; Frequency: 836.6 MHz;Duty Cycle: 1:8.3
Medium parameters used (interpolated): f = 836.6 MHz; σ = 0.995 mho/m; ε_r = 54; ρ = 1000 kg/m^3
Phantom section: Flat Section ; Measurement SW: DASY4, V4.7 Build 71; Postprocessing SW: SEMCAD, V1.8 Build 176

DASY4 Configuration:
- Probe: ES3DV3 - SN3161; ConvF(5.83, 5.83, 5.83); Calibrated: 2009-07-22
- Sensor-Surface: 4mm (Mechanical Surface Detection)
- Electronics: DAE3 Sn466; Calibrated: 2009-07-21
- Phantom: SAM 835/900 MHz; Type: SAM

Body 190/Area Scan (51x81x1): Measurement grid: dx=15mm, dy=15mm

Info: Interpolated medium parameters used for SAR evaluation.
Maximum value of SAR (interpolated) = 0.204 mW/g

Body 190/Zoom Scan (5x5x7)/Cube 0: Measurement grid: dx=8mm, dy=8mm, dz=5mm
Reference Value = 9.57 V/m; Power Drift = -0.024 dB
Peak SAR (extrapolated) = 0.261 W/kg
SAR(1 g) = 0.190 mW/g; SAR(10 g) = 0.134 mW/g

Info: Interpolated medium parameters used for SAR evaluation.
Maximum value of SAR (measured) = 0.202 mW/g

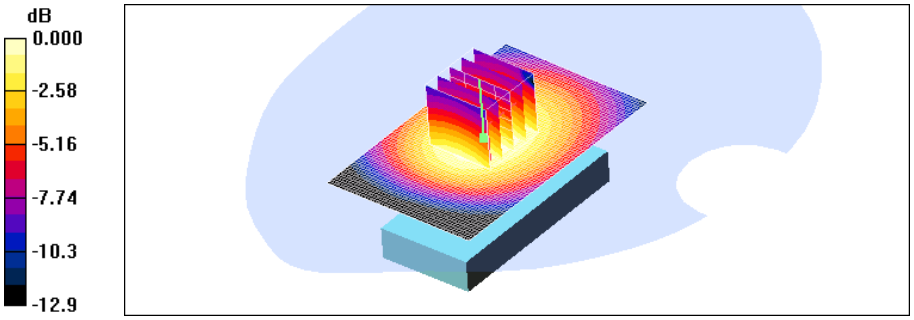

0 dB = 0.202mW/g

Test Laboratory:	HCT CO., LTD
EUT Type:	Cellular/PCS GSM/EDGE Phone with Bluetooth (GSM850/ PCS1900)
	GPRS Class 12 and GPRS mode class B(GPRS and GSM, but not simultaneously)
Liquid Temperature:	21.3 ℃
Ambient Temperature:	21.5 ℃
Test Date:	Sep.02, 2009

DUT: GU280; Type: (body); Serial: #1

Communication System: GSM 1900; Frequency: 1880 MHz;Duty Cycle: 1:8.3
Medium parameters used: f = 1880 MHz; σ = 1.48 mho/m; ε_r = 52.4; ρ = 1000 kg/m^3
Phantom section: Flat Section ; Measurement SW: DASY4, V4.7 Build 71; Postprocessing SW: SEMCAD, V1.8 Build 176

DASY4 Configuration:
- Probe: ES3DV3 - SN3161; ConvF(4.43, 4.43, 4.43); Calibrated: 2009-07-22
- Sensor-Surface: 4mm (Mechanical Surface Detection)
- Electronics: DAE3 Sn466; Calibrated: 2009-07-21
- Phantom: SAM 1800/1900 MHz; Type: SAM

Body 661/Area Scan (51x91x1): Measurement grid: dx=15mm, dy=15mm
Maximum value of SAR (interpolated) = 0.076 mW/g

Body 661/Zoom Scan (5x5x7)/Cube 0: Measurement grid: dx=8mm, dy=8mm, dz=5mm
Reference Value = 5.62 V/m; Power Drift = 0.065 dB
Peak SAR (extrapolated) = 0.110 W/kg
SAR(1 g) = 0.069 mW/g; SAR(10 g) = 0.041 mW/g
Maximum value of SAR (measured) = 0.075 mW/g

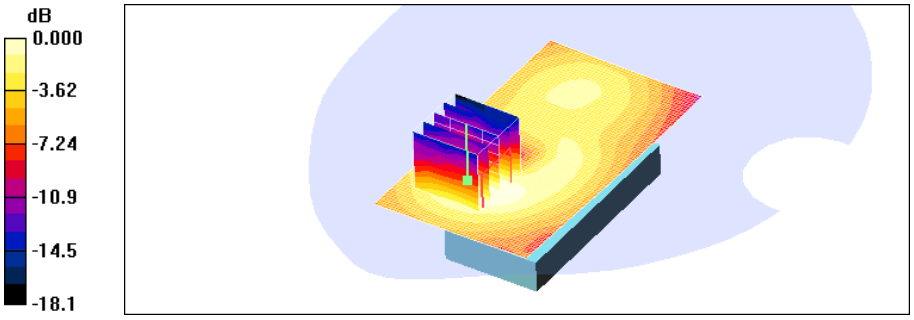

0 dB = 0.075mW/g

Test Laboratory:	HCT CO., LTD
EUT Type:	Cellular/PCS GSM/EDGE Phone with Bluetooth (GSM850/ PCS1900)
	GPRS Class 12 and GPRS mode class B(GPRS and GSM, but not simultaneously)
Liquid Temperature:	21.3 ℃
Ambient Temperature:	21.5 ℃
Test Date:	Sep.02, 2009

DUT: GU280; Type: (body); Serial: #1

Communication System: GSM 1900; Frequency: 1880 MHz;Duty Cycle: 1:4.15
Medium parameters used: f = 1880 MHz; σ = 1.48 mho/m; ε_r = 52.4; ρ = 1000 kg/m^3
Phantom section: Flat Section ; Measurement SW: DASY4, V4.7 Build 71; Postprocessing SW: SEMCAD, V1.8 Build 176

DASY4 Configuration:
- Probe: ES3DV3 - SN3161; ConvF(4.43, 4.43, 4.43); Calibrated: 2009-07-22
- Sensor-Surface: 4mm (Mechanical Surface Detection)
- Electronics: DAE3 Sn466; Calibrated: 2009-07-21
- Phantom: SAM 1800/1900 MHz; Type: SAM

Body 661/Area Scan (51x91x1): Measurement grid: dx=15mm, dy=15mm
Maximum value of SAR (interpolated) = 0.231 mW/g

Body 661/Zoom Scan (5x5x7)/Cube 0: Measurement grid: dx=8mm, dy=8mm, dz=5mm
Reference Value = 8.09 V/m; Power Drift = -0.089 dB
Peak SAR (extrapolated) = 0.219 W/kg
SAR(1 g) = 0.136 mW/g; SAR(10 g) = 0.081 mW/g
Maximum value of SAR (measured) = 0.149 mW/g

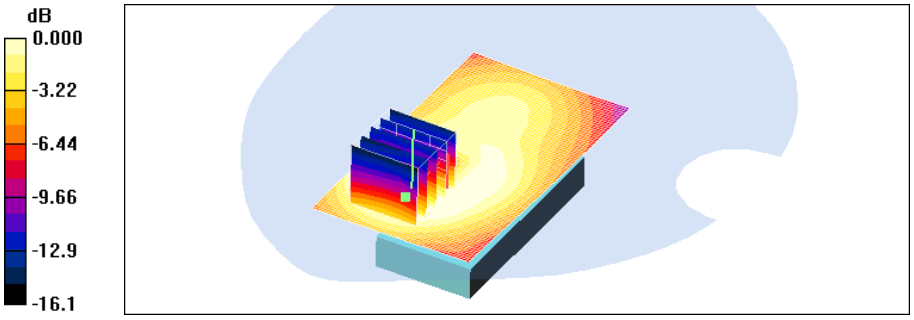

0 dB = 0.149mW/g

Test Laboratory:	HCT CO., LTD
EUT Type:	Cellular/PCS GSM/EDGE Phone with Bluetooth (GSM850/ PCS1900)
	GPRS Class 12 and GPRS mode class B(GPRS and GSM, but not simultaneously)
Liquid Temperature:	21.3 ℃
Ambient Temperature:	21.5 ℃
Test Date:	Sep.02, 2009

DUT: GU280; Type: (body); Serial: #1

Communication System: GSM 1900; Frequency: 1880 MHz;Duty Cycle: 1:2.77
Medium parameters used: f = 1880 MHz; σ = 1.48 mho/m; ε_r = 52.4; ρ = 1000 kg/m^3
Phantom section: Flat Section ; Measurement SW: DASY4, V4.7 Build 71; Postprocessing SW: SEMCAD, V1.8 Build 176

DASY4 Configuration:
- Probe: ES3DV3 - SN3161; ConvF(4.43, 4.43, 4.43); Calibrated: 2009-07-22
- Sensor-Surface: 4mm (Mechanical Surface Detection)
- Electronics: DAE3 Sn466; Calibrated: 2009-07-21
- Phantom: SAM 1800/1900 MHz; Type: SAM

Body 661/Area Scan (51x91x1): Measurement grid: dx=15mm, dy=15mm
Maximum value of SAR (interpolated) = 0.341 mW/g

Body 661/Zoom Scan (5x5x7)/Cube 0: Measurement grid: dx=8mm, dy=8mm, dz=5mm
Reference Value = 9.84 V/m; Power Drift = -0.003 dB
Peak SAR (extrapolated) = 0.487 W/kg
SAR(1 g) = 0.305 mW/g; SAR(10 g) = 0.177 mW/g
Maximum value of SAR (measured) = 0.324 mW/g

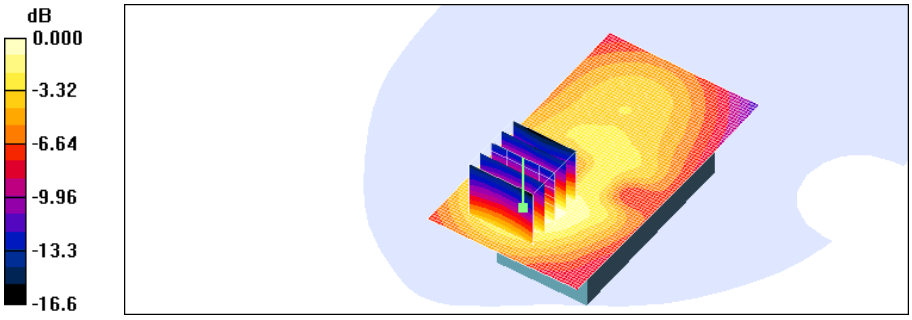

0 dB = 0.324mW/g

Test Laboratory:	HCT CO., LTD
EUT Type:	Cellular/PCS GSM/EDGE Phone with Bluetooth (GSM850/ PCS1900)
	GPRS Class 12 and GPRS mode class B(GPRS and GSM, but not simultaneously)
Liquid Temperature:	21.3 ℃
Ambient Temperature:	21.5 ℃
Test Date:	Sep.02, 2009

DUT: GU280; Type: (body); Serial: #1

Communication System: GSM 1900; Frequency: 1880 MHz;Duty Cycle: 1:2.075
Medium parameters used: f = 1880 MHz; σ = 1.48 mho/m; ε_r = 52.4; ρ = 1000 kg/m^3
Phantom section: Flat Section ; Measurement SW: DASY4, V4.7 Build 71; Postprocessing SW: SEMCAD, V1.8 Build 176

DASY4 Configuration:
- Probe: ES3DV3 - SN3161; ConvF(4.43, 4.43, 4.43); Calibrated: 2009-07-22
- Sensor-Surface: 4mm (Mechanical Surface Detection)
- Electronics: DAE3 Sn466; Calibrated: 2009-07-21
- Phantom: SAM 1800/1900 MHz; Type: SAM

Body 661/Area Scan (51x91x1): Measurement grid: dx=15mm, dy=15mm
Maximum value of SAR (interpolated) = 0.452 mW/g

Body 661/Zoom Scan (5x5x7)/Cube 0: Measurement grid: dx=8mm, dy=8mm, dz=5mm
Reference Value = 11.3 V/m; Power Drift = -0.053 dB
Peak SAR (extrapolated) = 0.611 W/kg
SAR(1 g) = 0.392 mW/g; SAR(10 g) = 0.223 mW/g

Maximum value of SAR (measured) = 0.429 mW/g

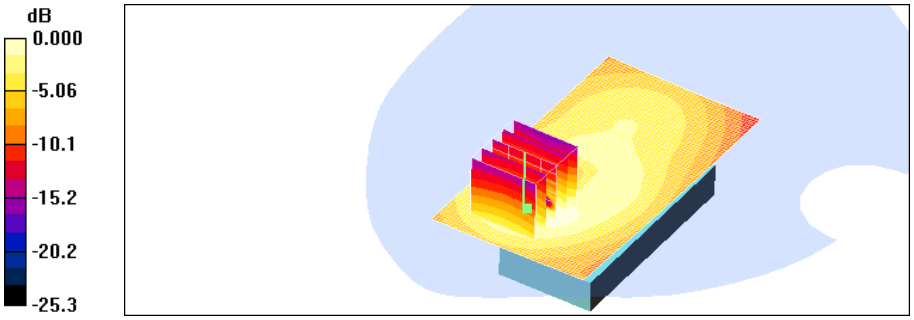

0 dB = 0.429mW/g

Test Laboratory:	HCT CO., LTD
EUT Type:	Cellular/PCS GSM/EDGE Phone with Bluetooth (GSM850/ PCS1900)
	GPRS Class 12 and GPRS mode class B(GPRS and GSM, but not simultaneously)
Liquid Temperature:	21.3 ℃
Ambient Temperature:	21.5 ℃
Test Date:	Sep.02, 2009

DUT: GU280; Type: (body); Serial: #1

Communication System: GSM 1900; Frequency: 1880 MHz;Duty Cycle: 1:2.075
Medium parameters used: f = 1880 MHz; σ = 1.48 mho/m; ε_r = 52.4; ρ = 1000 kg/m^3
Phantom section: Flat Section ; Measurement SW: DASY4, V4.7 Build 71; Postprocessing SW: SEMCAD, V1.8 Build 176

DASY4 Configuration:
- Probe: ES3DV3 - SN3161; ConvF(4.43, 4.43, 4.43); Calibrated: 2009-07-22
- Sensor-Surface: 4mm (Mechanical Surface Detection)
- Electronics: DAE3 Sn466; Calibrated: 2009-07-21
- Phantom: SAM 1800/1900 MHz; Type: SAM

Body 661/Area Scan (51x91x1): Measurement grid: dx=15mm, dy=15mm
Maximum value of SAR (interpolated) = 0.215 mW/g

Body 661/Zoom Scan (5x5x7)/Cube 0: Measurement grid: dx=8mm, dy=8mm, dz=5mm
Reference Value = 12.1 V/m; Power Drift = -0.111 dB
Peak SAR (extrapolated) = 0.237 W/kg
SAR(1 g) = 0.181 mW/g; SAR(10 g) = 0.113 mW/g
Maximum value of SAR (measured) = 0.213 mW/g

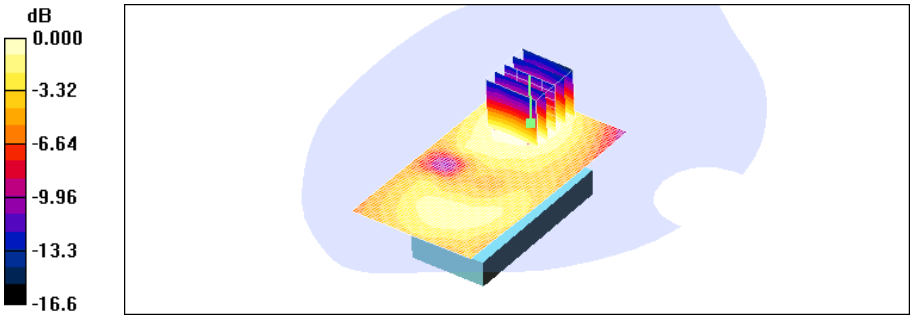

0 dB = 0.213mW/g

Test Laboratory:	HCT CO., LTD
EUT Type:	Cellular/PCS GSM/EDGE Phone with Bluetooth (GSM850/ PCS1900)
	GPRS Class 12 and GPRS mode class B(GPRS and GSM, but not simultaneously)
Liquid Temperature:	21.3 ℃
Ambient Temperature:	21.5 ℃
Test Date:	Sep.02, 2009

DUT: GU280; Type: (body); Serial: #1

Communication System: GSM 1900; Frequency: 1880 MHz;Duty Cycle: 1:8.3
Medium parameters used: f = 1880 MHz; σ = 1.48 mho/m; ε_r = 52.4; ρ = 1000 kg/m^3
Phantom section: Flat Section ; Measurement SW: DASY4, V4.7 Build 71; Postprocessing SW: SEMCAD, V1.8 Build 176

DASY4 Configuration:
- Probe: ES3DV3 - SN3161; ConvF(4.43, 4.43, 4.43); Calibrated: 2009-07-22
- Sensor-Surface: 4mm (Mechanical Surface Detection)
- Electronics: DAE3 Sn466; Calibrated: 2009-07-21
- Phantom: SAM 1800/1900 MHz; Type: SAM

Body 661/Area Scan (51x81x1): Measurement grid: dx=15mm, dy=15mm
Maximum value of SAR (interpolated) = 0.122 mW/g

Body 661/Zoom Scan (5x5x7)/Cube 0: Measurement grid: dx=8mm, dy=8mm, dz=5mm
Reference Value = 5.84 V/m; Power Drift = 0.010 dB
Peak SAR (extrapolated) = 0.175 W/kg
SAR(1 g) = 0.109 mW/g; SAR(10 g) = 0.063 mW/g
Maximum value of SAR (measured) = 0.118 mW/g

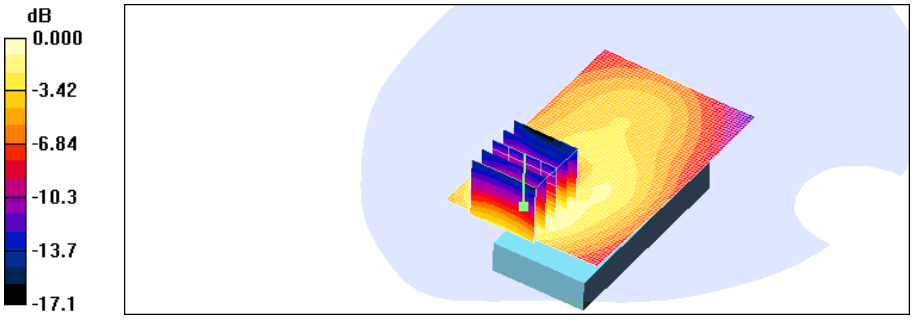

0 dB = 0.118mW/g

Test Laboratory:	HCT CO., LTD
EUT Type:	Cellular/PCS GSM/EDGE Phone with Bluetooth (GSM850/ PCS1900)
	GPRS Class 12 and GPRS mode class B(GPRS and GSM, but not simultaneously)
Liquid Temperature:	21.2 ℃
Ambient Temperature:	21.4 ℃
Test Date:	Sep.01, 2009

DUT: GU280; Type: up; Serial: #1

Communication System: GSM 850; Frequency: 836.6 MHz;Duty Cycle: 1:8.3
Medium parameters used (interpolated): f = 836.6 MHz; σ = 0.894 mho/m; ε_r = 42; ρ = 1000 kg/m^3
Phantom section: Left Section ; Measurement SW: DASY4, V4.7 Build 71; Postprocessing SW: SEMCAD, V1.8 Build 176

DASY4 Configuration:
- Probe: ES3DV3 - SN3161; ConvF(5.94, 5.94, 5.94); Calibrated: 2009-07-22
- Sensor-Surface: 4mm (Mechanical Surface Detection)
- Electronics: DAE3 Sn466; Calibrated: 2009-07-21
- Phantom: SAM 835/900 MHz; Type: SAM

Left touch 190/Area Scan (51x101x1): Measurement grid: dx=15mm, dy=15mm

Info: Interpolated medium parameters used for SAR evaluation.
Maximum value of SAR (interpolated) = 0.352 mW/g

Left touch 190/Zoom Scan (5x5x7)/Cube 0: Measurement grid: dx=8mm, dy=8mm, dz=5mm
Reference Value = 7.81 V/m; Power Drift = -0.177 dB
Peak SAR (extrapolated) = 0.457 W/kg
SAR(1 g) = 0.318 mW/g; SAR(10 g) = 0.214 mW/g

Info: Interpolated medium parameters used for SAR evaluation.
Maximum value of SAR (measured) = 0.345 mW/g

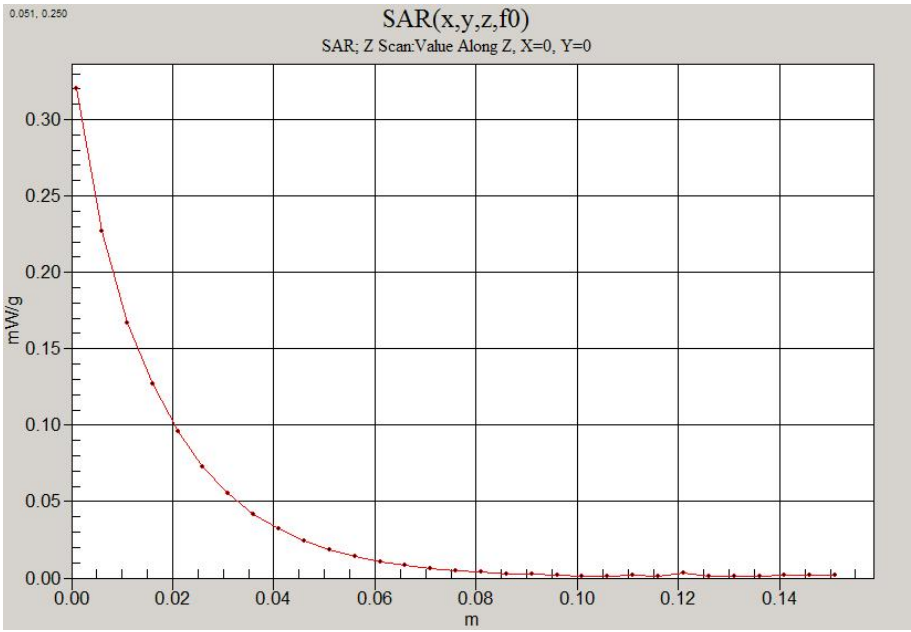

Test Laboratory:	HCT CO., LTD
EUT Type:	Cellular/PCS GSM/EDGE Phone with Bluetooth (GSM850/ PCS1900)
	GPRS Class 12 and GPRS mode class B(GPRS and GSM, but not simultaneously)
Liquid Temperature:	21.2 ℃
Ambient Temperature:	21.4 ℃
Test Date:	Sep.01, 2009

DUT: GU280; Type: (body); Serial: #1

Communication System: GSM 850; Frequency: 836.6 MHz;Duty Cycle: 1:2.075
Medium parameters used (interpolated): f = 836.6 MHz; σ = 0.995 mho/m; ε_r = 54; ρ = 1000 kg/m^3
Phantom section: Flat Section ; Measurement SW: DASY4, V4.7 Build 71; Postprocessing SW: SEMCAD, V1.8 Build 176

DASY4 Configuration:
- Probe: ES3DV3 - SN3161; ConvF(5.83, 5.83, 5.83); Calibrated: 2009-07-22
- Sensor-Surface: 4mm (Mechanical Surface Detection)
- Electronics: DAE3 Sn466; Calibrated: 2009-07-21
- Phantom: SAM 835/900 MHz; Type: SAM

Body 190/Area Scan (51x81x1): Measurement grid: dx=15mm, dy=15mm

Info: Interpolated medium parameters used for SAR evaluation.
Maximum value of SAR (interpolated) = 0.706 mW/g

Body 190/Zoom Scan (5x5x7)/Cube 0: Measurement grid: dx=8mm, dy=8mm, dz=5mm
Reference Value = 16.5 V/m; Power Drift = 0.025 dB
Peak SAR (extrapolated) = 0.892 W/kg
SAR(1 g) = 0.657 mW/g; SAR(10 g) = 0.464 mW/g

Info: Interpolated medium parameters used for SAR evaluation.
Maximum value of SAR (measured) = 0.695 mW/g

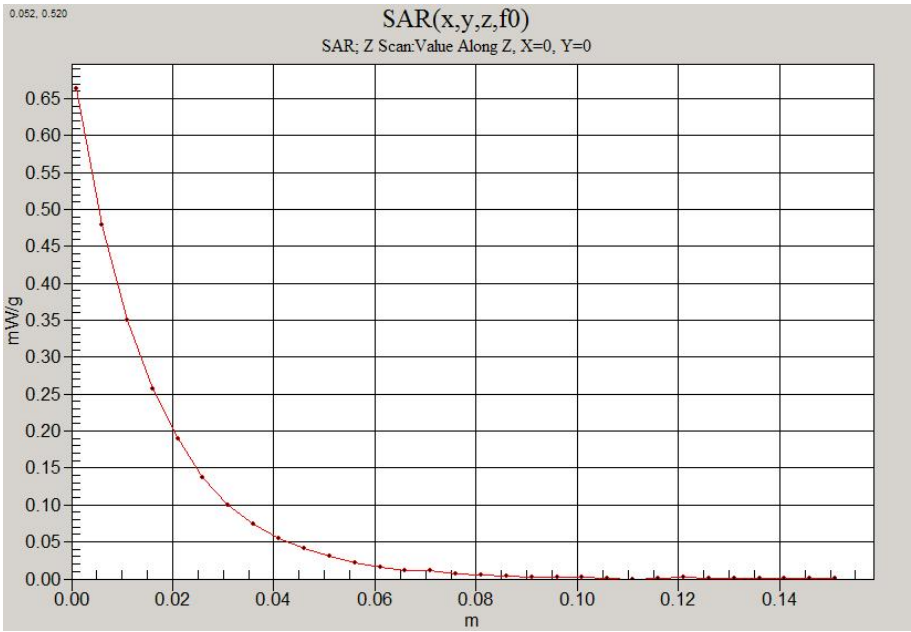

Test Laboratory:	HCT CO., LTD
EUT Type:	Cellular/PCS GSM/EDGE Phone with Bluetooth (GSM850/ PCS1900)
	GPRS Class 12 and GPRS mode class B(GPRS and GSM, but not simultaneously)
Liquid Temperature:	21.3 ℃
Ambient Temperature:	21.5 ℃
Test Date:	Sep.02, 2009

DUT: GU280; Type: up; Serial: #1

Communication System: GSM 1900; Frequency: 1880 MHz;Duty Cycle: 1:8.3
Medium parameters used: f = 1880 MHz; σ = 1.38 mho/m; ε_r = 39.3; ρ = 1000 kg/m^3
Phantom section: Left Section ; Measurement SW: DASY4, V4.7 Build 71; Postprocessing SW: SEMCAD, V1.8 Build 176

DASY4 Configuration:
- Probe: ES3DV3 - SN3161; ConvF(4.89, 4.89, 4.89); Calibrated: 2009-07-22
- Sensor-Surface: 4mm (Mechanical Surface Detection)
- Electronics: DAE3 Sn466; Calibrated: 2009-07-21
- Phantom: SAM 1800/1900 MHz; Type: SAM

Left touch 661/Area Scan (51x101x1): Measurement grid: dx=15mm, dy=15mm
Maximum value of SAR (interpolated) = 0.782 mW/g

Left touch 661/Zoom Scan (5x5x7)/Cube 0: Measurement grid: dx=8mm, dy=8mm, dz=5mm
Reference Value = 7.40 V/m; Power Drift = -0.325 dB
Peak SAR (extrapolated) = 1.15 W/kg
SAR(1 g) = 0.706 mW/g; SAR(10 g) = 0.402 mW/g
Maximum value of SAR (measured) = 0.781 mW/g

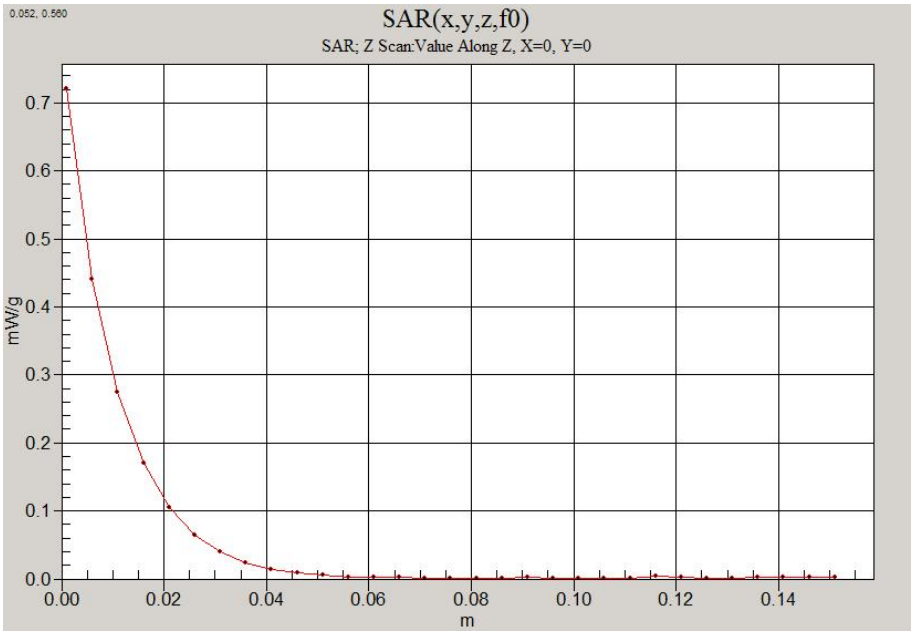

Test Laboratory:	HCT CO., LTD
EUT Type:	Cellular/PCS GSM/EDGE Phone with Bluetooth (GSM850/ PCS1900)
	GPRS Class 12 and GPRS mode class B(GPRS and GSM, but not simultaneously)
Liquid Temperature:	21.3 ℃
Ambient Temperature:	21.5 ℃
Test Date:	Sep.02, 2009

DUT: GU280; Type: (body); Serial: #1

Communication System: GSM 1900; Frequency: 1880 MHz;Duty Cycle: 1:2.075
Medium parameters used: f = 1880 MHz; σ = 1.48 mho/m; ε_r = 52.4; ρ = 1000 kg/m^3
Phantom section: Flat Section ; Measurement SW: DASY4, V4.7 Build 71; Postprocessing SW: SEMCAD, V1.8 Build 176

DASY4 Configuration:
- Probe: ES3DV3 - SN3161; ConvF(4.43, 4.43, 4.43); Calibrated: 2009-07-22
- Sensor-Surface: 4mm (Mechanical Surface Detection)
- Electronics: DAE3 Sn466; Calibrated: 2009-07-21
- Phantom: SAM 1800/1900 MHz; Type: SAM

Body 661/Area Scan (51x91x1): Measurement grid: dx=15mm, dy=15mm
Maximum value of SAR (interpolated) = 0.452 mW/g

Body 661/Zoom Scan (5x5x7)/Cube 0: Measurement grid: dx=8mm, dy=8mm, dz=5mm
Reference Value = 11.3 V/m; Power Drift = -0.053 dB
Peak SAR (extrapolated) = 0.611 W/kg
SAR(1 g) = 0.392 mW/g; SAR(10 g) = 0.223 mW/g

Maximum value of SAR (measured) = 0.429 mW/g

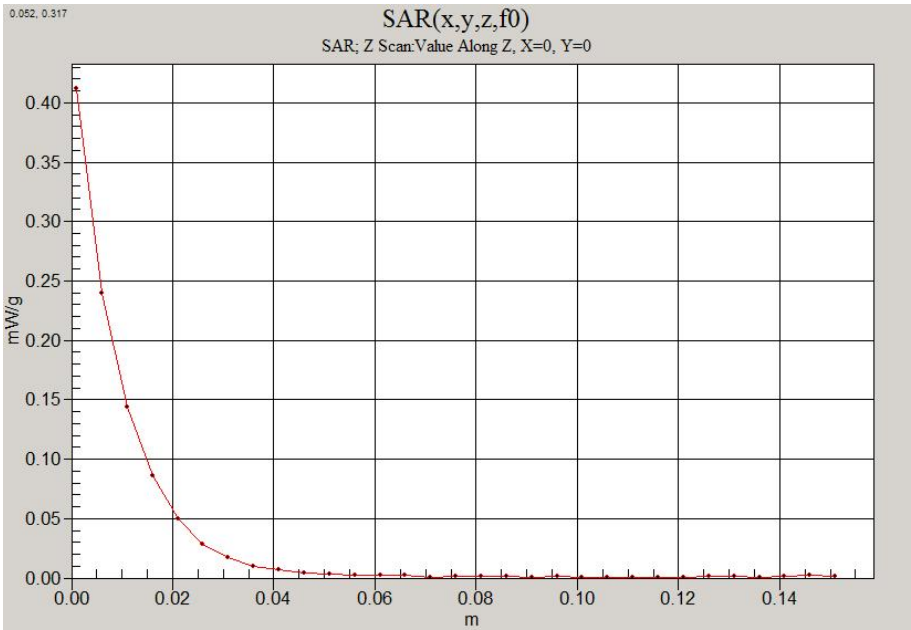

Attachment 2. – Dipole Validation Plots