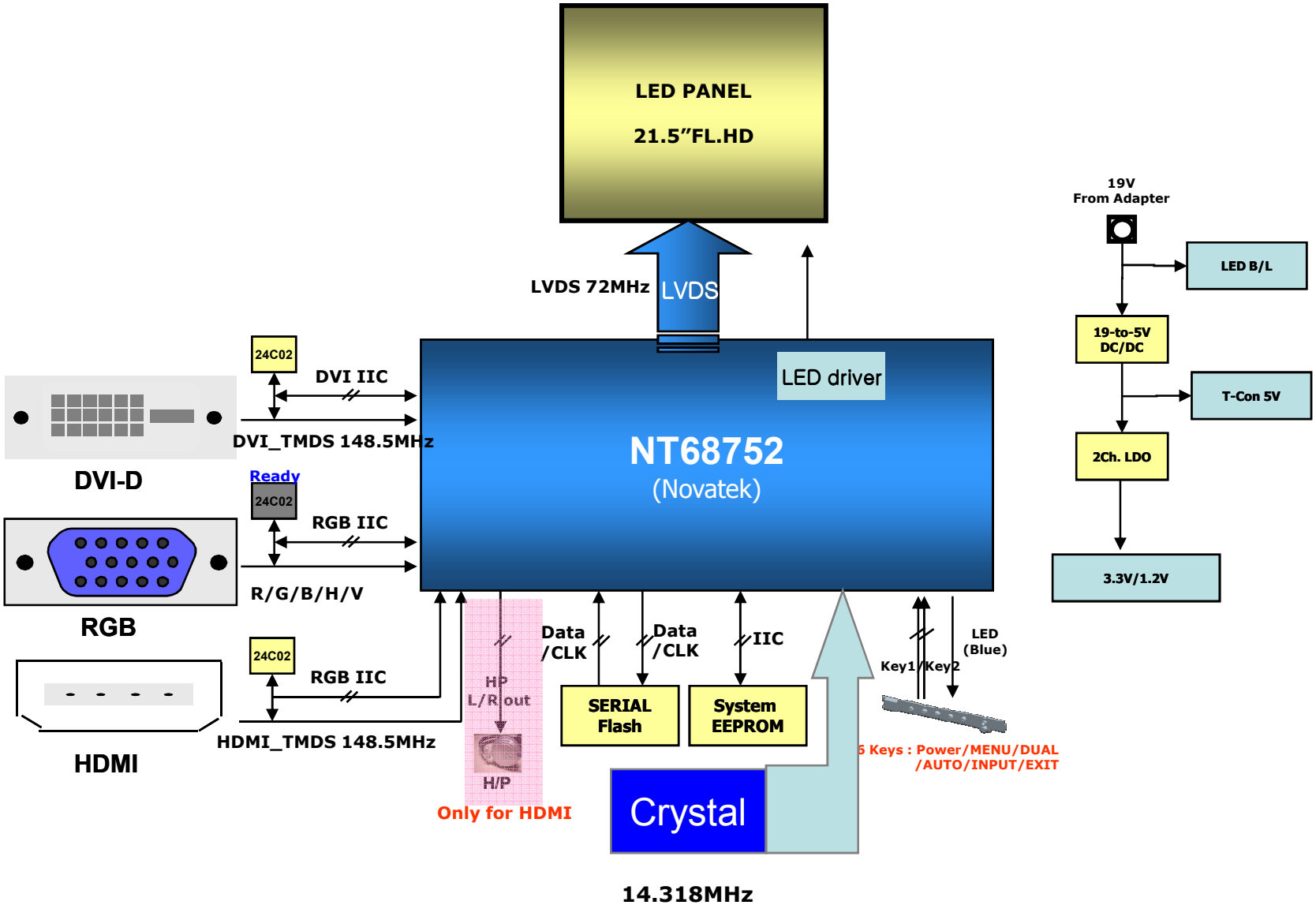IPS224V Block Diagram