SAR TEST REPORT

HCT CO., LTD

EUT Type:	Cellular/PCS GSM/EDGE Phone with Bluetooth & WLAN GPRS Class 10 and GPRS mode class B(GPRS and GSM, but not simultaneously)		
FCC ID:	BEJKM553		
Model:	KM553	Trade Name	LG
Date of Issue:	Aug.24, 2010		
Test report No.:	HCTA1008FS02		
Test Laboratory:	**HCT CO., LTD.** SAN 136-1, AMI-RI, BUBAL-EUP, ICHEON-SI, KYOUNGKI-DO, 467-701, KOREA TEL: +82 31 639 8565 FAX: +82 31 639 8525		
Applicant :	**LG Electronics, Inc.** 60-39, Gasan-Dong, Gumchon-Gu, Seoul 153-023, Korea Tel: +82-2-2033-1113 Fax: +82-2-2033-1222		
Testing has been carried out in accordance with:	RSS-102 Issue 2; Health Canada Safety Code 6 47CFR §2.1093 FCC OET Bulletin 65(Edition 97-01), Supplement C (Edition 01-01) ANSI/ IEEE C95.1 – 2005 IEEE 1528-2003		
Test result:	The tested device complies with the requirements in respect of all parameters subject to the test. The test results and statements relate only to the items tested. The test report shall not be reproduced except in full, without written approval of the laboratory.		
Signature	Report prepared by : Young-Soo Jang Test Engineer of SAR Part	Approved by : Jae-Sang So Manager of SAR Part	

Table of Contents

1. INTRODUCTION 3
2. DESCRIPTION OF DEVICE 4
3. DESCRIPTION OF TEST EQUIPMENT 5
   3.1 SAR MEASUREMENT SETUP 5
   3.3 PROBE CALIBRATION PROCESS 7
   3.4 SAM Phantom 9
   3.5 Device Holder for Transmitters 9
   3.6 Brain & Muscle Simulating Mixture Characterization 10
   3.7 SAR TEST EQUIPMENT 11
4. SAR MEASUREMENT PROCEDURE 12
5. DESCRIPTION OF TEST POSITION 13
   5.1 HEAD POSITION 13
   5.2 Body Holster/Belt Clip Configurations 14
6. MEASUREMENT UNCERTAINTY 15
7. ANSI/ IEEE C95.1 - 2005 RF EXPOSURE LIMITS 16
8. SYSTEM VERIFICATION 17
   8.1 Tissue Verification 17
   8.2 System Validation 17
9. TEST CONFIGURATIONS 18
10. RF CONDUCTED POWER 19
   10.1 Procedures Used to Establish RF Signal for SAR 19
   10.2 SAR Measurement Conditions for UMTS 19
11. SAR Evaluation Considerations for Handsets with Multiple Transmitters and Antennas 22
12. SAR TEST DATA SUMMARY 23
   12.1 Measurement Results (GSM850 Head SAR Touch) 23
   12.2 Measurement Results (GSM850 Head SAR Tilt) 24
   12.3 Measurement Results (GSM1900 Head SAR Touch) 25
   12.4 Measurement Results (GSM1900 Head SAR Tilt) 26
   12.5 Measurement Results (GSM850 Body SAR) 27
   12.6 Measurement Results (GSM1900 Body SAR) 28
   12.7 Measurement Results (802.11b/g Module Body SAR) 29
13. CONCLUSION 30
14. REFERENCES 31
Attachment 1. – SAR Test Plots 32
Attachment 2. – Dipole Validation Plots 63
Attachment 3. – Probe Calibration Data 73
Attachment 4. – Dipole Calibration Data 87

1. INTRODUCTION

The FCC has adopted the guidelines for evaluating the environmental effects of radio frequency radiation in ET Docket 93-62 on Aug. 6, 1996 to protect the public and workers from the potential hazards of RF emissions due to FCC-regulated portable devices.

The safety limits used for the environmental evaluation measurements are based on the criteria published by the American National Standards Institute (ANSI) for localized specific absorption rate (SAR) in IEEE/ANSI C95.1-2005 Standard for Safety Levels with Respect to Human Exposure to Radio Frequency Electromagnetic Fields, 3 kHz to 300 GHz. 1992 by the Institute of Electrical and Electronics Engineers, Inc., New York, New York 10017. The measurement procedure described in IEEE/ANSI C95.3-1992 Recommended Practice for the Measurement of Potentially Hazardous Electromagnetic Fields - RF and Microwave is used for guidance in measuring SAR due to the RF radiation exposure from the Equipment Under Test (EUT). These criteria for SAR evaluation are similar to those recommended by the National Council on Radiation Protection and Measurements (NCRP) in Biological Effects and Exposure Criteria for Radio frequency Electromagnetic Fields," NCRP Report No. 86 NCRP, 1986, Bethesda, MD 20814. SAR is a measure of the rate of energy absorption due to exposure to an RF transmitting source. SAR values have been related to threshold levels for potential biological hazards.

SAR Definition

Specific Absorption Rate (SAR) is defined as the time derivative of the incremental electromagnetic energy (d*W*) absorbed by (dissipated in) an incremental mass (d*m*) contained in a volume element (d*V*) of a given density (*r*). It is also defined as the rate of RF energy absorption per unit mass at a point in an absorbing body.

$$SAR = \frac{d}{dt}\left(\frac{dU}{dm}\right) = \frac{d}{dt}\left(\frac{dU}{\rho\, dv}\right)$$

Figure 2. SAR Mathematical Equation

SAR is expressed in units of Watts per Kilogram (W/kg).

$$SAR = \sigma E^2 / \rho$$

where:

σ = conductivity of the tissue-simulant material (S/m)

ρ = mass density of the tissue-simulant material (kg/m^3)

E = Total RMS electric field strength (V/m)

NOTE: The primary factors that control rate of energy absorption were found to be the wavelength of the incident field in relations to the dimensions and geometry of the irradiated organism, the orientation of the organism in relation to the polarity of field vectors, the presence of reflecting surfaces, and whether conductive contact is made by the organism with a ground plane.

2. DESCRIPTION OF DEVICE

Environmental evaluation measurements of specific absorption rate (SAR) distributions in emulated human head and body tissues exposed to radio frequency (RF) radiation from wireless portable devices for compliance with the rules and regulations of the U.S. Federal Communications Commission (FCC).

EUT Type	Cellular/PCS GSM/WCDMA/EDGE Phone with Bluetooth/ WLAN GPRS Class 10 and GPRS mode class B(GPRS and GSM, but not simultaneously)
FCC ID	BEJKM553
Model(s)	KM553
Additional Model	LG-KM553
Trade Name	LG
Serial Number(s)	#1
Application Type	Certification
Mode(s) of Operation	GSM850/GSM1900/WLAN
Tx Frequency	824.20 - 848.80 MHz (GSM850) 1 850.20 – 1 909.80 MHz (GSM1900) 2 412- 2 462 MHz (DSSS/ OFDM)
Rx Frequency	869.20 - 893.80 MHz (GSM850) 1 930.20 – 1 989.80 MHz (GSM1900) 2 412- 2 462 MHz (DSSS/ OFDM)
FCC Classification	Licensed Portable Transmitter Held to Ear (PCE)
Production Unit or Identical Prototype	Prototype
Max SAR	1.04 W/kg GSM850 Head SAR / 0.598 W/kg GSM850 Body SAR 0.962 W/kg GSM1900 Head SAR / 0.467 W/kg GSM1900 Body SAR 0.069 W/kg Wi-Fi 802.11b
Date(s) of Tests	Aug. 21, 2010 ~ Aug. 22, 2010
Antenna Type	Intenna

3. DESCRIPTION OF TEST EQUIPMENT

3.1 SAR MEASUREMENT SETUP

These measurements are performed using the DASY4 automated dosimetric assessment system. It is made by Schmid & Partner Engineering AG (SPEAG) in Zurich, Switzerland. It consists of high precision robotics system (Staubli), robot controller, Pentium III computer, near-field probe, probe alignment sensor, and the generic twin phantom containing the brain equivalent material. The robot is a six-axis industrial robot performing precise movements to position the probe to the location (points) of maximum electromagnetic field (EMF) (see Figure.3.1).

A cell controller system contains the power supply, robot controller, teach pendant (Joystick), and remote control, is used to drive the robot motors. The PC consists of the HP Pentium IV 3.0 GHz computer with Windows XP system and SAR Measurement Software DASY4, A/D interface card, monitor, mouse, and keyboard. The Staubli Robot is connected to the cell controller to allow software manipulation of the robot. A data acquisition electronic (DAE) circuit performs the signal amplification, signal multiplexing, AD-conversion, offset measurements, mechanical surface detection, collision detection, etc. is connected to the Electro-optical coupler (EOC). The EOC performs the conversion from the optical into digital electric signal of the DAE and transfers data to the PC plug-in card.

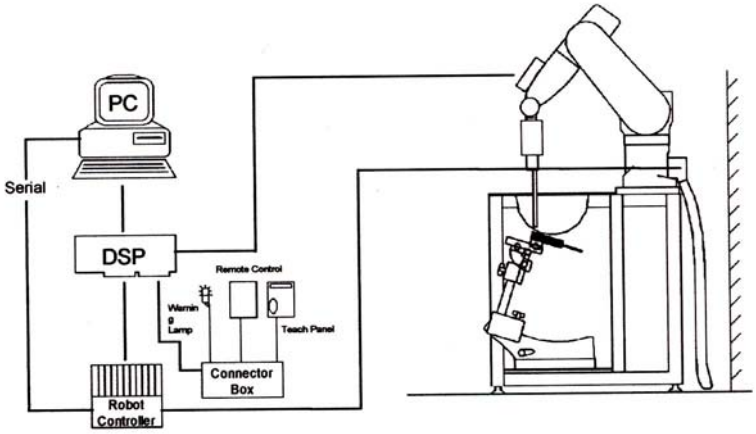

Figure 3.1 HCT SAR Lab. Test Measurement Set-up

The DAE4 consists of a highly sensitive electrometer-grade preamplifier with auto-zeroing, a channel and gain-switching multiplexer, a fast 16 bit AD-converter and a command decoder and control logic unit. Transmission to the PC-card is accomplished through an optical downlink for data and status information and an optical uplink for commands and clock lines. The mechanical probe mounting device includes two different sensor systems for frontal and sidewise probe contacts. They are also used for mechanical surface detection and probe collision detection. The robot uses its own controller with a built in VME-bus computer. The system is described in detail in.

3.2 DASY4 E-FIELD PROBE SYSTEM

Construction	Symmetrical design with triangular core Interleaved sensors
	Built-in shielding against static charges
	PEEK enclosure material (resistant to organic solvents, e.g., DGBE)
Calibration	Basic Broad Band Calibration in air
	Conversion Factors (CF) for HSL 900 and HSL 1810
	Additional CF for other liquids and frequencies upon request
Frequency	10 MHz to 4 GHz; Linearity: ± 0.2 dB (30 MHz to 4 GHz)
Directivity	± 0.2 dB in HSL (rotation around probe axis)
	± 0.3 dB in tissue material (rotation normal to probe axis)
Dynamic Range	5 µW/g to > 100 mW/g; Linearity: ± 0.2 dB
Dimensions	Overall length: 330 mm (Tip: 20 mm)
	Tip diameter: 3.9 mm (Body: 12 mm)
	Distance from probe tip to dipole centers: 2.0 mm
Application	General dosimetry up to 4 GHz
	Dosimetry in strong gradient fields
	Compliance tests of mobile phones

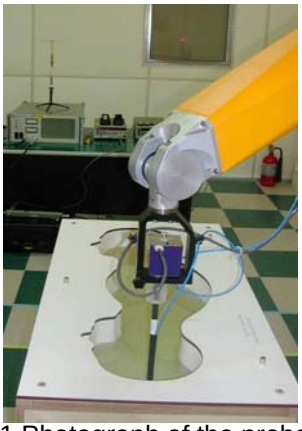

Figure 4.1 Photograph of the probe and the Phantom

Figure 4.2 ES3DV3 E-field Probe

The SAR measurements were conducted with the dosimetric probe ET3DV6, designed in the classical triangular configuration and optimized for dosimetric evaluation. The probe is constructed using the thick film technique; with printed resistive lines on ceramic substrates. The probe is equipped with an optical multifiber line ending at the front of the probe tip. It is connected to the EOC box on the robot arm and provides an automatic detection of the phantom surface.
Half of the fibers are connected to a pulsed infrared transmitter, the other half to a synchronized receiver.
As the probe approaches the surface, the reflection from the surface produces a coupling from the transmitting to the receiving fibers.
This reflection increases first during the approach, reaches a maximum and then decreases. If the probe is flatly touching the surface, the coupling is zero. The distance of the coupling maximum to the surface is independent of the surface reflectivity and largely independent of the surface to probe angle.
The DASY4 software reads the reflection during a software approach and looks for the maximum using a 2nd order fitting.
The approach is stopped at reaching the maximum.

3.3 PROBE CALIBRATION PROCESS

3.3.1 E-Probe Calibration

Each probe is calibrated according to a dosimetric assessment procedure with an accuracy better than ± 10 %. The spherical isotropy was evaluated with the proper procedure and found to be better than ± 0.25 dB. The sensitivity parameters (NormX, NormY, NormZ), the diode compression parameter (DCP) and the conversion factor (ConvF) of the probe is tested.

The free space E-field from amplified probe outputs is determined in a test chamber. This is performed in a TEM cell for frequencies bellow 1 GHz, and in a waveguide above 1 GHz for free space. For the free space calibration, the probe is placed in the volumetric center of the cavity and at the proper orientation with the field. The probe is then rotated 360 degrees.

E-field temperature correlation calibration is performed in a flat phantom filled with the appropriate simulated brain tissue. The measured free space E-field in the medium correlates to temperature rise in a dielectric medium. For temperature correlation calibration a RF transparent thermistor-based temperature probe is used in conjunction with the E-field probe.

$$SAR = C\frac{\Delta T}{\Delta t}$$

where:

Δt = exposure time (30 seconds),

C = heat capacity of tissue (brain or muscle),

ΔT = temperature increase due to RF exposure.

SAR is proportional to $\Delta T / \Delta t$, the initial rate of tissue heating, before thermal diffusion takes place. Now it's possible to quantify the electric field in the simulated tissue by equating the thermally derived SAR to the E- field;

$$SAR = \frac{|E|^2 \cdot \sigma}{\rho}$$

where:

σ = simulated tissue conductivity,

ρ = Tissue density (1.25 g/cm^3 for brain tissue)

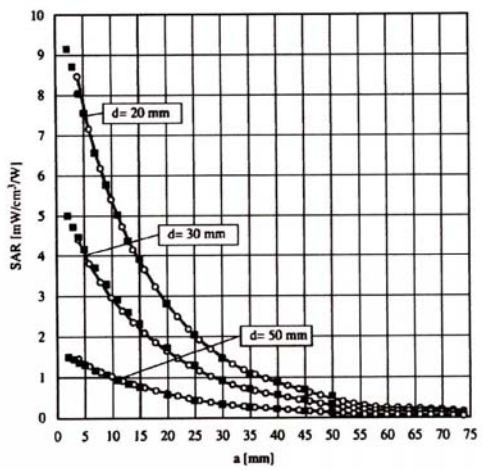

Figure 3.4 E-Field and Temperature measurements at 900 MHz

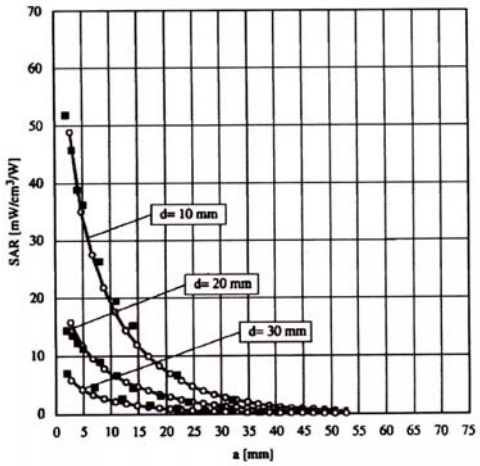

Figure 3.5 E-Field and temperature measurements at 1.8 GHz

3.3.2 Data Extrapolation

The DASY4 software automatically executes the following procedures to calculate the field units from the microvolt readings at the probe connector. The first step of the evaluation is a linearization of the filtered input signal to account for the compression characteristics of the detector diode. The compensation depends on the input signal, the diode type and the DC-transmission factor from the diode to the evaluation electronics. If the exciting field is pulsed, the crest factor of the signal must be known to correctly compensate for peak power. The formula for each channel can be given like below;

$$V_i = U_i + U_i^2 \cdot \frac{cf}{dcp_i}$$

with
V_i = compensated signal of channel i (i=x,y,z)
U_i = input signal of channel i (i=x,y,z)
cf = crest factor of exciting field (DASY parameter)
dcp_i = diode compression point (DASY parameter)

From the compensated input signals the primary field data for each channel can be evaluated:

E-field probes:

$$E_i = \sqrt{\frac{V_i}{Norm_i \cdot ConvF}}$$

with
V_i = compensated signal of channel i (i = x,y,z)
$Norm_i$ = sensor sensitivity of channel i (i = x,y,z) $\mu V/(V/m)^2$ for E-field probes
ConvF = sensitivity of enhancement in solution
E_i = electric field strength of channel i in V/m

The RSS value of the field components gives the total field strength (Hermetian magnitude):

$$E_{tot} = \sqrt{E_x^2 + E_y^2 + E_z^2}$$

The primary field data are used to calculate the derived field units.

$$SAR = E_{tot}^2 \cdot \frac{\sigma}{\rho \cdot 1000}$$

with
SAR = local specific absorption rate in W/g
E_{tot} = total field strength in V/m
σ = conductivity in [mho/m] or [Siemens/m]
ρ = equivalent tissue density in g/cm^3

The power flow density is calculated assuming the excitation field to be a free space field.

$$P_{pwe} = \frac{E_{tot}^2}{3770}$$

with
P_{pwe} = equivalent power density of a plane wave in W/cm^2
E_{tot} = total electric field strength in V/m

3.4 SAM Phantom

The SAM Phantom is constructed of a fiberglass shell integrated in a wooden table. The shape of the shell is based on data from an anatomical study designed to determine the maximum exposure in at least 90 % of all users. It enables the dosimetric evaluation of left and right hand phone usage as well as body mounted usage at the flat phantom region. A cover prevents the evaporation of the liquid. Reference markings on the Phantom allow the complete setup of all predefined phantom positions and measurement grids by manually teaching three points in the robot.

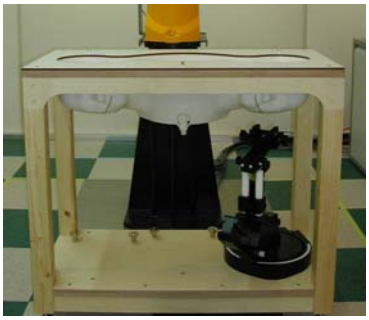

Figure 3.6 SAM Phantom

Shell Thickness	2.0 mm
Filling Volume	about 30 L
Dimensions	810 mm x 1 000 mm x 500 mm (H x L x W)

3.5 Device Holder for Transmitters

In combination with the SAM Phantom V 4.0, the Mounting Device (POM) enables the rotation of the mounted transmitter in spherical coordinates whereby the rotation points is the ear opening. The devices can be easily, accurately, and repeatable positioned according to the FCC and CENELEC specifications. The device holder can be locked at different phantom locations (left head, right head, flat phantom).

Figure 3.7 Device Holder

Note: A simulating human hand is not used due to the complex anatomical and geometrical structure of the hand that may produced infinite number of configurations. To produce the Worst-case condition (the hand absorbs antenna output power), the hand is omitted during the tests.

3.6 Brain & Muscle Simulating Mixture Characterization

The brain and muscle mixtures consist of a viscous gel using hydrox-ethyl cellulose (HEC) gelling agent and saline solution (see Table 3.1). Preservation with a bacteriacide is added and visual inspection is made to make sure air bubbles are not trapped during the mixing process. The mixture is calibrated to obtain proper dielectric constant (permittivity) and conductivity of the desired tissue. The mixture characterizations used for the brain and muscle tissue simulating liquids are according to the data by C. Gabriel and G. Hartsgrove.

Ingredients (% by weight)	Frequency (MHz)									
	450		835		915		1 900		2 450	
Tissue Type	Head	Body	Head	Body	Head	Body	Head	Body	Head	Body
Water	38.56	51.16	41.45	52.4	41.05	56.0	54.9	40.4	62.7	73.2
Salt (NaCl)	3.95	1.49	1.45	1.4	1.35	0.76	0.18	0.5	0.5	0.04
Sugar	56.32	46.78	56.0	45.0	56.5	41.76	0.0	58.0	0.0	0.0
HEC	0.98	0.52	1.0	1.0	1.0	1.21	0.0	1.0	0.0	0.0
Bactericide	0.19	0.05	0.1	0.1	0.1	0.27	0.0	0.1	0.0	0.0
Triton X-100	0.0	0.0	0.0	0.0	0.0	0.0	0.0	0.0	36.8	0.0
DGBE	0.0	0.0	0.0	0.0	0.0	0.0	44.92	0.0	0.0	26.7

Salt:	99 % Pure Sodium Chloride	Sugar:	98 % Pure Sucrose
Water:	De-ionized, 16M resistivity	HEC:	Hydroxyethyl Cellulose
DGBE:	99 % Di(ethylene glycol) butyl ether,[2-(2-butoxyethoxy) ethanol]		
Triton X-100(ultra pure):	Polyethylene glycol mono[4-(1,1,3,3-tetramethylbutyl)phenyl] ether		

Table 3.1 Composition of the Tissue Equivalent Matter

3.7 SAR TEST EQUIPMENT

Manufacturer	Type / Model	S/N	Calib. Date	Calib.Interval	Calib.Due
SPEAG	SAM Phantom	-	N/A	N/A	N/A
Staubli	Robot RX90L	F01/5K09A1/A/01	N/A	N/A	N/A
Staubli	Robot ControllerCS7MB	F99/5A82A1/C/01	N/A	N/A	N/A
HP	Pavilion t000_puffer	KRJ51201TV	N/A	N/A	N/A
SPEAG	Light Alignment Sensor	265	N/A	N/A	N/A
Staubli	Teach Pendant (Joystick)	D221340.01	N/A	N/A	N/A
SPEAG	DAE4	869	Sep 18, 2009	Annual	Sep 18, 2010
SPEAG	E-Field Probe ET3DV6	3161	Mar. 22, 2010	Annual	Mar. 22, 2011
SPEAG	E-Field Probe ET3DV6	1630	May 25, 2010	Annual	May 25, 2011
SPEAG	Validation Dipole D450V2	1007	July 15, 2010	Biennial	July 15, 2012
SPEAG	Validation Dipole D835V2	441	May 21, 2010	Annual	May 21, 2011
SPEAG	Validation Dipole D1800V2	2d006	Apr. 20, 2010	Biennial	Apr. 20, 2012
SPEAG	Validation Dipole D1900V2	5d032	July 16, 2010	Annual	July 16, 2011
SPEAG	Validation Dipole D2450V2	768	Apr. 19, 2010	Biennial	Apr. 19, 2012
Agilent	Power Meter(F) E4419B	MY41291386	Nov. 05, 2009	Annual	Nov. 05, 2010
Agilent	Power Sensor(G) 8481	MY41090870	Nov. 05, 2009	Annual	Nov. 05, 2010
HP	Dielectric Probe Kit 85070C	00721521	N/A	N/A	N/A
HP	Dual Directional Coupler	16072	Nov. 05, 2009	Annual	Nov. 05, 2010
R&S	Base Station CMU200	110740	July 26, 2010	Annual	July 26, 2011
Agilent	Base Station E5515C	GB44400269	Feb. 10, 2010	Annual	Feb. 10, 2011
HP	Signal Generator E4438C	MY42082646	Dec. 24, 2009	Annual	Dec. 24, 2010
HP	Network Analyzer 8753C	3310J01394	Dec. 04, 2009	Annual	Dec. 04, 2010

NOTE:

The E-field probe was calibrated by SPEAG, by the waveguide technique procedure. Dipole Validation measurement is performed by HCT Lab. before each test. The brain simulating material is calibrated by HCT using the dielectric probe system and network analyzer to determine the conductivity and permittivity (dielectric constant) of the brain-equivalent material.

4. SAR MEASUREMENT PROCEDURE

The evaluation was performed with the following procedure:

1. The SAR value at a fixed location above the ear point was measured and was used as a reference value for assessing the power drop.

2. The SAR distribution at the exposed side of the head was measured at a distance of 3.9 mm from the inner surface of the shell. The area covered the entire dimension of the head and the horizontal grid spacing was 20 mm x 20 mm. Based on this data, the area of the maximum absorption was determined by spline interpolation.

3. Around this point, a volume of 32 mm x 32 mm x 30 mm was assessed by measuring 5 x 5 x 7 points. On this basis of this data set, the spatial peak SAR value was evaluated with the following procedure:

   a. The data at the surface were extrapolated, since the center of the dipoles is 2.7 mm away from the tip of the probe and the distance between the surface and the lowest measuring point is 1.2 mm. The extrapolation was based on a least square algorithm. A polynomial of the fourth order was calculated through the points in z-axes. This polynomial was then used to evaluate the points between the surface and the probe tip.
   b. The maximum interpolated value was searched with a straight-forward algorithm. Around this maximum the SAR values averaged over the spatial volumes (1 g or 10 g) were computed using the 3D-Spline interpolation algorithm. The 3D-spline is composed of three one-dimensional splines with the “Not a knot” condition (in x, y, and z directions. The volume was integrated with the trapezoidal algorithm. One thousand points (10 x 10 x 10) were interpolated to calculate the average.
   c. All neighboring volumes were evaluated until no neighboring volume with a higher average value was found.

4. The SAR value, at the same location as procedure #1, was re-measured. If the value changed by more than 5 %, the evaluation is repeated.

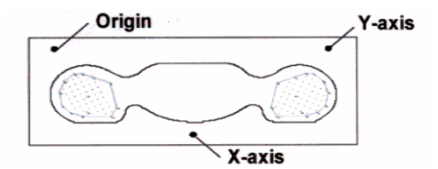

Figure 4.1 SAR Measurement Point in Area Scan

5. DESCRIPTION OF TEST POSITION

5.1 HEAD POSITION

The device was placed in a normal operating position with the Point A on the device, as illustrated in following drawing, aligned with the location of the RE(ERP) on the phantom. With the ear-piece pressed against the head, the vertical center line of the body of the handset was aligned with an imaginary plane consisting of the RE, LE and M. While maintaining these alignments, the body of the handset was gradually moved towards the cheek until any point on the mouth-piece or keypad contacted the cheek. This is a cheek/touch position. For ear/tilt position, while maintain the device aligned with the BM and FN lines, the device was pivot against ERP back for 15º or until the device antenna touch the phantom. Please refer to IEEE 1528-2003 illustration below.

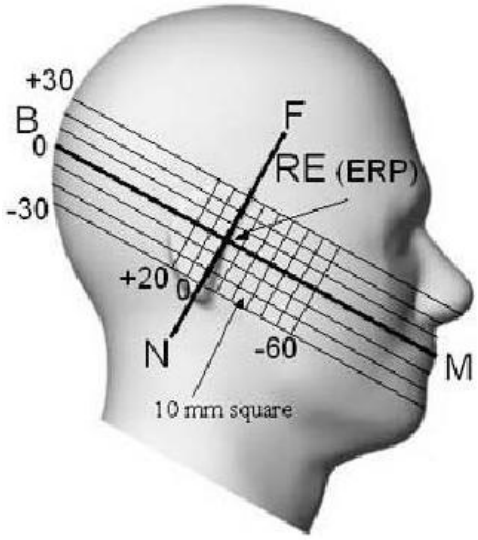

Figure 5.1 Side view of the phantom

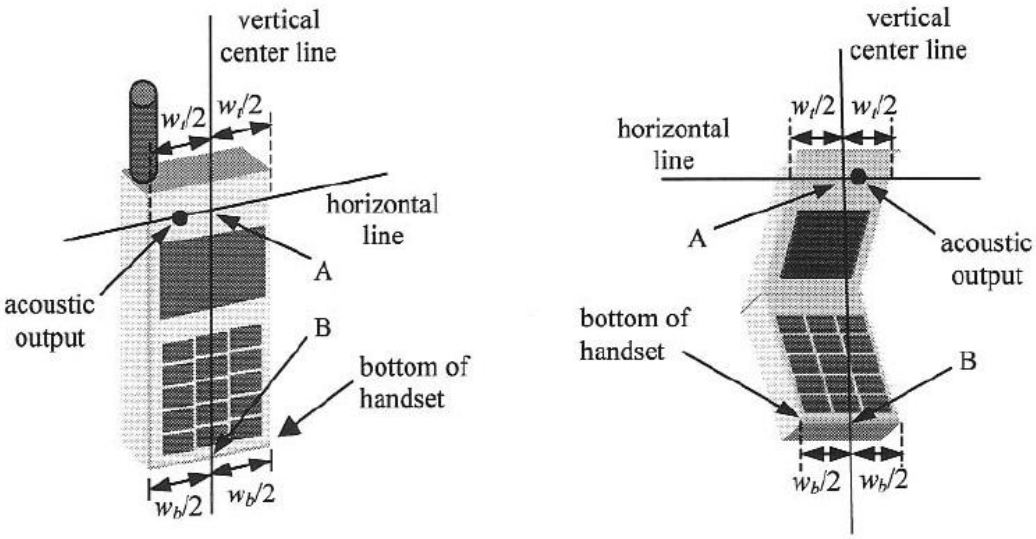

Figure 5.2 Handset vertical and horizontal reference lines

5.2 Body Holster/Belt Clip Configurations

Body-worn operating configurations are tested with the belt-clips and holsters attached to the device and positioned against a flat phantom in a normal use configuration. A device with a headset output is tested with a headset connected to the device. Body dielectric parameters are used.

Accessories for Body-worn operation configurations are divided into two categories: those that do not contain metallic components and those that contain metallic components. When multiple accessories that do not contain metallic components are supplied with the device, the device is tested with only the accessory that dictates the closest spacing to the body. Then multiple accessories that contain metallic components are tested with each accessory. If multiple accessory share an identical metallic component (i.e. the same metallic belt-clip used with different holsters with no other metallic components) only the accessory that dictates the closest spacing to the body is tested.

Body-worn accessories may not always be supplied or available as options for some Devices intended to be authorized for body-worn use. In this case, a test configuration with a separation distance between the back of the device and the flat phantom is used.

Since this EUT does not supply any body worn accessory to the end user a distance of 2.0 cm from the EUT back surface to the liquid interface is configured for the generic test.

"See the Test SET-UP Photo"

Transmitters that are designed to operate in front of a person's face, as in push-to-talk configurations, are tested for SAR compliance with the front of the device positioned to face the flat phantom. For devices that are carried next to the body such as a shoulder, waist or chest-worn transmitters, SAR compliance is tested with the accessory(ies), Including headsets and microphones, attached to the device and positioned against a flat phantom in a normal use configuration.

In all cases SAR measurements are performed to investigate the worst-case positioning. Worstcase positioning is then documented and used to perform Body SAR testing.

6. MEASUREMENT UNCERTAINTY

Measurement uncertainties in SAR measurements are difficult to quantify due to several variables including biological, physiological, and environmental. However, we estimate the measurement uncertainties in SAR to be less than 15 % - 25 %.

According to ANSI/IEEE C95.3, the overall uncertainties are difficult to assess and will vary with the type of meter and usage situation. However, accuracy's of 1 dB to ± 3 dB can be expected in practice, with greater uncertainties in near-field situations and at higher frequencies (shorter wavelengths), or areas where large reflecting objects are present. Under optimum measurement conditions, SAR measurement uncertainties of at least ± 2 dB can be expected.

According to CENELEC, typical worst-case uncertainty of field measurements is 5 dB. For well-defined modulation characteristics the uncertainty can be reduced to ± 3 dB.

Uncertainty Budegt

Frequency (MHz)	Error Description	Tol (± %)	Prob. dist.	Div.	c_i	Standard Uncertainty (± %)	v_{eff}	Combined Uncertainty (± %)	k	Expanded STD Uncertainty (± %)
	1. Measurement System									
	Probe Calibration	5.50	N	1	1	5.50	∞			
	Axial Isotropy	4.70	R	1.73	0.7	1.90	∞			
	Hemispherical Isotropy	9.60	R	1.73	0.7	3.88	∞			
	Boundary Effects	1.00	R	1.73	1	0.58	∞			
	Linearity	4.70	R	1.73	1	2.71	∞			
	System Detection Limits	1.00	R	1.73	1	0.58	∞			
	Readout Electronics	0.30	N	1.00	1	0.30	∞			
	Response Time	0.8	R	1.73	1	0.46	∞			
	Integration Time	2.6	R	1.73	1	1.50	∞			
	RF Ambient Noise	3.00	R	1.73	1	1.73	∞			
	RF Ambient Reflection	3.00	R	1.73	1	1.73	∞			
	Probe Positioner	0.40	R	1.73	1	0.23	∞			
	Probe Positioning	2.90	R	1.73	1	1.67	∞			
	Max SAR Eval	1.00	R	1.73	1	0.58	∞			
	2.Test Sample Related									
	Device Positioning	1.80	N	1.00	1	1.80	9			
	Device Holder	3.60	N	1.00	1	3.60	5			
	Power Drift	5.00	R	1.73	1	2.89	∞			
	3.Phantom and Setup									
	Phantom Uncertainty	4.00	R	1.73	1	2.31	∞			
	Liquid Conductivity(target)	5.00	R	1.73	0.64	1.85	∞			
	Liquid Permitivity(target)	5.00	R	1.73	0.60	1.73	∞			
835 (Head)	Liquid Permitivity(meas.)	1.45	N	1	0.60	0.87	∞	10.32	2	20.64
	Liquid Conductivity(meas.)	1.33	N	1	0.64	0.85	∞			
835 (Body)	Liquid Permitivity(meas.)	3.08	N	1	0.60	1.85	∞	10.44	2	20.87
	Liquid Conductivity(meas.)	1.03	N	1	0.64	0.66	∞			
1900 (Head)	Liquid Permitivity(meas.)	2.00	N	1	0.60	1.20	∞	10.32	2	20.64
	Liquid Conductivity(meas.)	0.00	N	1	0.64	0.00	∞			
1900 (Body)	Liquid Permitivity(meas.)	0.56	N	1	0.60	0.34	∞	10.29	2	20.58
	Liquid Conductivity(meas.)	1.32	N	1	0.64	0.84	∞			
2450 (Body)	Liquid Permitivity(meas.)	1.89	N	1	0.60	1.13	∞	10.32	2	20.63
	Liquid Conductivity(meas.)	0.51	N	1	0.64	0.33	∞			

Table 6.1 Breakdown of Errors

7. ANSI/ IEEE C95.1 - 2005 RF EXPOSURE LIMITS

HUMAN EXPOSURE	UNCONTROLLED ENVIRONMENT General Population (W/kg) or (mW/g)	CONTROLLED ENVIRONMENT Occupational (W/kg) or (mW/g)
SPATIAL PEAK SAR * (Brain)	1.60	8.00
SPATIAL AVERAGE SAR ** (Whole Body)	0.08	0.40
SPATIAL PEAK SAR *** (Hands / Feet / Ankle / Wrist)	4.00	20.00

Table 7.1 Safety Limits for Partial Body Exposure

NOTES:

* The Spatial Peak value of the SAR averaged over any 1 g of tissue (defined as a tissue volume in the shape of a cube) and over the appropriate averaging time.

** The Spatial Average value of the SAR averaged over the whole-body.

******* The Spatial Peak value of the SAR averaged over any 10 g of tissue (defined as a tissue volume in the shape of a cube) and over the appropriate averaging time.

Uncontrolled Environments are defined as locations where there is the exposure of individuals who have no knowledge or control of their exposure.

Controlled Environments are defined as locations where there is exposure that may be incurred by persons who are aware of the potential for exposure, (i.e.as a result of employment or occupation).

8. SYSTEM VERIFICATION

8.1 Tissue Verification

Freq. [MHz]	Date	Liquid	Liquid Temp.[°C]	Parameters	Target Value	Measured Value	Deviation [%]	Limit [%]
835	Aug. 21, 2010	Head	21.2	ε r	41.5	42.1	+ 1.45	± 5
				σ	0.90	0.888	- 1.33	± 5
835	Aug. 21, 2010	Body	21.2	ε r	55.2	56.9	+ 3.08	± 5
				σ	0.97	0.98	+ 1.03	± 5
1 900	Aug. 22, 2010	Head	21.1	ε r	40.0	40.8	+ 2.00	± 5
				σ	1.40	1.4	0.00	± 5
1 900	Aug. 22, 2010	Body	21.1	ε r	53.3	53.6	+ 0.56	± 5
				σ	1.52	1.50	- 1.32	± 5
2 450	Aug. 22, 2010	Body	21.1	ε r	52.7	51.7	- 1.89	± 5
				σ	1.95	1.96	+ 0.51	± 5

8.2 System Validation

Prior to assessment, the system is verified to the ± 10 % of the specifications at 835 MHz / 1 900 MHz / 2 450 MHz by using the system validation kit. (Graphic Plots Attached)

* Input Power: 100 m W

Freq. [MHz]	Date	Liquid	Liquid Temp. [°C]	SAR Average	Target Value (SPEAG) (mW/g)	*Measured Value (mW/g)	Deviation [%]	Limit [%]
835	Aug. 21, 2010	Head	21.2	1 g	9.66	0.975	+ 0.93	± 10
1 900	Aug. 22, 2010	Head	21.1	1 g	39.9	3.92	- 1.75	± 10
2 450	Aug. 22, 2010	Body	21.1	1 g	52.7	5.26	- 0.18	± 10

9. TEST CONFIGURATIONS

SAR Testing with IEEE 802.11 a/b/g Transmitters

Normal Network operating configurations are not suitable for measuring the SAR of 802.11 a/b/g transmitters. Unpredictable fluctuations in network traffic and antenna diversity conditions can introduce undesirable variations in SAR results. The SAR for these devices should be measured using chipset based test mode software to ensure the results are consistent and reliable.

9.1 General Device Setup

Chipset based test mode software is hardware dependent and generally varies among manufacturers. The device operating parameters established in test mode for SAR measurements must be identical to those programmed in production units, including output power levels, amplifier gain settings and other RF performance tuning parameters. The test frequencies should correspond to actual channel frequencies defined for domestic use. SAR for devices with switched diversity should be measured with only one antenna transmitting at a time during each SAR measurement, according to a fixed modulation and data rate. The same data pattern should be used for all measurements.

9.2 Frequency Channel Configurations

80.11 a/b/g and 4.9 GHz operating modes are tested independently according to the service requirements in each frequency band. 80.211 b/g modes are tested on channels 1, 6 and 11.802.11a is tested for UNII operations on channels 36 and 48 in the 5.15-5.25 GHz band; channels 52 and 64 in the 5.25-5.35 GHz band; Channels 104, 116, 124 and 136 in the 5.470-5.725 GHz band; and channels 149 and 161 in the 5.8 GHz band. When 5.8 GHz § 15.247 is also available, channels 149, 157 and 165 should be tested instead of the UNII channels. 4.9 GHz is tested on channels 1, 10 and 5 or 6, whichever has the higher output power, for 5 MHz channels; channels 11,15 and 19 for 10 MHz channels; and channels 21 and 25 for 20 MHz channels.

These are referred to as the “default test channels”. 802.11g mode was evaluated only if the output power was 0.25 dB higher than the 802.11b mode.

Mode		GHz	Channel	Turbo Channel	“Default Test Channels”			
					§15.247		UNII	
					802.11b	802.11g		
802.11 b/g		2.412	1		√	∇		
		2.437	6	6	√	∇		
		2.462	11		√	∇		
802.11a	UNII	5.18	36				√	
		5.20	40	42 (5.21 GHz)				*
		5.22	44					*
		5.24	48	50 (5.25 GHz)			√	
		5.26	52				√	
		5.28	56	58 (5.29 GHz)				*
		5.30	60					*
		5.32	64				√	
		5.500	100	Unknown				*
		5.520	104				√	
		5.540	108					*
		5.560	112					*
		5.580	116				√	
		5.600	120					*
		5.620	124				√	
		5.640	128					*
		5.660	132					*
		5.680	136				√	
		5.700	140					*
	UNII or §15.247	5.745	149		√		√	
		5.765	153	152 (5.76 GHz)		*		*
		5.785	157		√			*
		5.805	161	160 (5.80 GHz)		*	√	
	§15.247	5.825	165		√			

802.11 Test Channels per FCC Requirements

10. RF CONDUCTED POWER

Power measurements were performed using a base station simulator under digital average power

10.1 Procedures Used to Establish RF Signal for SAR

The handset was placed into a simulated call using a base station simulator in a shielded chamber. Such test signals offer a consistent means for testing SAR and are recommended for evaluation SAR[4] SAR measurements were taken with a fully charged battery. In order to verify that the device was tested and maintained at full power, this was configured with the base station simulator. The SAR measurement Software calculates a reference point at the start and end of the test to check for power drifts. If conducted Power deviations of more then 5 % occurred, the tests were repeated.

10.2 SAR Measurement Conditions for UMTS

Body SAR is not required for handsets with HSDPA capabilities when the maximum average output of each RF channel with HSDPA active is less than ¼ dB higher than that measured without HSDPA using 12.2 kbps RMC and the maximum SAR for 12.2 kbps RMC is ≤ 75 % of the SAR limit. Otherwise, SAR is Measured for HSDPA, using an FRC with H-Set 1 in Sub-test 1 and a 12.2 kbps RMC configured in Test Loop Mode 1, using the highest body SAR configuration in 12.2 kbps RMC without HSDPA, on the maximum output channel with the body exposure configuration that results in the highest SAR in 12.2 kbps RMC for that RF channel.

10.2.1 Output Power Verification

Maximum output power is verified on the High, Middle and Low channels according to the general descriptions in section 5.2 of 3 GPP TS 34.121, using the appropriate RMC or AMR with TPC(transmit power control) set to all “1s”

10.2.2 Head SAR Measurements

SAR for head exposure configurations is measured using the 12.2 kbps RMC with TPC bits configured to all “1s”. SAR in AMR configurations is not required when the maximum average output of each RF channel for 12.2 kbps AMR is less than ¼ dB higher than that measured in 12.2 kbps RMC. Otherwise, SAR is measured on the maximum output channel in 12.2 AMR with a 3.4 kbps SRB (signaling radio bearer) using the exposure configuration that results in the highest SAR for that RF channel in 12.2 RMC.

10.2.3 Body SAR Measurement

SAR for body exposure configurations is measured using the 12.2 kbps RMC with the TPC bits all “1s”.

10.2.4 Handsets with Release 5 HSDPA

Body SAR is not required for handsets with HSDPA capabilities when the maximum average output of each RF channel with HSDPA active is less than ¼ dB higher than that measured without HSDPA using 12.2 kbps RMC and the maximum SAR for 12.2 kbps RMC is ≤ 75 % of the SAR limit. Otherwise, SAR is Measured for HSDPA, using an FRC with H-Set 1 in Sub-test 1 and a 12.2 kbps RMC configured in Test Loop Mode 1, using the highest body SAR configuration in 12.2 kbps RMC without HSDPA, on the maximum output channel with the body exposure configuration that results in the highest SAR in 12.2 kbps RMC for that RF channel.

Sub-Test 1 Setup for Release 5 HSDPA

Sub-test	β_c	β_d	β_d (SF)	β_c/β_d	β_{hs} (1)	CM (dB)(2)
1	2/15	15/15	64	2/15	4/15	0.0
2	12/15(3)	15/15(3)	64	12/15(3)	24/15	1.0
3	15/15	8/15	64	15/8	30/15	1.5
4	15/15	4/15	64	15/4	30/15	1.5

Note 1: Δ_{ACK}, Δ_{NACK} and $\Delta_{CQI} = 8 \Leftrightarrow A_{hs} = \beta_{hs}/\beta_c = 30/15 \Leftrightarrow \beta_{hs} = 30/15 * \beta_c$
Note 2: CM = 1 for β_c/β_d =12/15, β_{hs}/β_c=24/15.
Note 3: For subtest 2 the β_c/β_d ratio of 12/15 for the TFC during the measurement period (TF1, TF0) is achieved by setting the signaled gain factors for the reference TFC (TF1, TF1) to β_c = 11/15 and β_d = 15/15.

10.2.5 Handsets with Release 6 HSPA (HSDPA/HSUPA)

Body SAR is not required for handsets with HSPA capabilities when the maximum average output of each RF channel with HSUPA/HSDPA active is less than ¼ dB higher than that measured without HSUPA/HSDPA using 12.2 kbps RMC and the maximum SAR for 12.2 kbps RMC is ≤ 75 % of the SAR limit. Body SAR for HSPA is measured with E-DCH Sub-test 5, using H-Set 1 and QPSK for FRC and a 12.2 kbps RMC configured in Test Loop Mode 1 with power control algorithm 2, according to the highest body SAR configuration in 12.1 kbps RMC without HSPA. When VOIP is applicable for head exposure, SAR is not required when the maximum output of each RF channel with HSPA is less than ¼ dB higher than that measured using 12.2 kbps RMC; otherwise, the same HSPA configuration used for body measurement should be used to test for head exposure.

Sub-test	β_c	β_d	β_d (SF)	β_c/β_d	β_{hs}(1)	β_{ec}	β_{ed}	β_{ed} (SF)	β_{ed} (codes)	CM(2) (dB)	MPR (dB)	AG(4) Index	E-TFCI
1	11/15(3)	15/15(3)	64	11/15(3)	22/15	209/225	1039/225	4	1	1.0	0.0	20	75
2	6/15	15/15	64	6/15	12/15	12/15	94/75	4	1	3.0	2.0	12	67
3	15/15	9/15	64	15/9	30/15	30/15	β_{ed1}: 47/15 β_{ed2}: 47/15	4	2	2.0	1.0	15	92
4	2/15	15/15	64	2/15	4/15	2/15	56/75	4	1	3.0	2.0	17	71
5	15/15(4)	15/15(4)	64	15/15(4)	30/15	24/15	134/15	4	1	1.0	0.0	21	81

Note 1: Δ_{ACK}, Δ_{NACK} and Δ_{CQI} = 8 ⇔ $A_{hs} = \beta_{hs}/\beta_c = 30/15$ ⇔ $\beta_{hs} = 30/15 * \beta_c$.
Note 2: CM = 1 for β_c/β_d =12/15, β_{hs}/β_c=24/15. For all other combinations of DPDCH, DPCCH, HS- DPCCH, E-DPDCH and E-DPCCH the MPR is based on the relative CM difference.
Note 3: For subtest 1 the β_c/β_d ratio of 11/15 for the TFC during the measurement period (TF1, TF0) is achieved by setting the signaled gain factors for the reference TFC (TF1, TF1) to β_c = 10/15 and β_d = 15/15.
Note 4: For subtest 5 the β_c/β_d ratio of 15/15 for the TFC during the measurement period (TF1, TF0) is achieved by setting the signaled gain factors for the reference TFC (TF1, TF1) to β_c = 14/15 and β_d = 15/15.
Note 5: Testing UE using E-DPDCH Physical Layer category 1 Sub-test 3 is not required according to TS 25.306 Table 5.1g.
Note 6: β_{ed} can not be set directly; it is set by Absolute Grant Value.

Band	Channel	Voice	GPRS Data		EDGE Data	
		GSM (dBm)	GPRS 1 TX Slot (dBm)	GPRS 2 TX Slot (dBm)	EDGE 1 TX Slot (dBm)	EDGE 2 TX Slot (dBm)
GSM 850	128	32.46	32.44	31.63	27.03	25.44
	190	32.44	32.42	31.60	27.09	25.50
	251	32.40	32.38	31.56	27.10	25.50
GSM 1900	512	30.61	30.59	28.71	26.09	24.47
	661	30.49	30.49	28.63	26.03	24.41
	810	30.55	30.55	28.67	26.03	24.40

Table 10.1 GSM Conducted output powers

802.11b Mode		Rate (Mbps)	Measured Power(dBm)	Limit (dBm)
Frequency[MHz]	Channel No.			
2412	1	1 Mbps	14.38	30
		2 Mbps	14.16	30
		5.5 Mbps	10.75	30
		11 Mbps	14.18	30
2437	6	1 Mbps	13.66	30
		2 Mbps	13.56	30
		5.5 Mbps	10.21	30
		11 Mbps	13.60	30
2462	11	1 Mbps	14.32	30
		2 Mbps	14.21	30
		5.5 Mbps	10.80	30
		11 Mbps	14.27	30

Table 10.4 IEEE 802.11b Conducted output power

802.11g Mode		Rate (Mbps)	Measured Power(dBm)	Limit (dBm)
Frequency[MHz]	Channel No.			
2412	1	6 Mbps	11.01	30
		9 Mbps	11.22	30
		12 Mbps	10.78	30
		18 Mbps	10.93	30
		24 Mbps	11.06	30
		36 Mbps	11.01	30
		48 Mbps	10.87	30
		54 Mbps	10.76	30
2437	6	6 Mbps	10.26	30
		9 Mbps	10.32	30
		12 Mbps	10.28	30
		18 Mbps	10.11	30
		24 Mbps	10.27	30
		36 Mbps	10.02	30
		48 Mbps	9.93	30
		54 Mbps	9.91	30
2462	11	6 Mbps	10.92	30
		9 Mbps	10.90	30
		12 Mbps	10.76	30
		18 Mbps	10.67	30
		24 Mbps	10.84	30
		36 Mbps	10.70	30
		48 Mbps	10.39	30
		54 Mbps	10.49	30

Table 10.5 IEEE 802.11g Conducted output power

11. SAR Evaluation Considerations for Handsets with Multiple Transmitters and Antennas

11.1 SAR Evaluation Considerations

These procedures were followed according to FCC "SAR Evaluation Considerations for Handsets with Multiple Transmitters and Antennas", May 2008. The procedures are applicable to phones with built-in unlicensed transmitters, such as 802.11 a/b/g and Bluetooth devices.

	2.45	5.15 - 5.35	5.47 - 5.85	GHz
P_{Ref}	12	6	5	mW
Device output power should be rounded to the nearest mW to compare with values specified in this				

Table. 11.1 Output Power Thresholds for Unlicensed Transmitters

	Individual Transmitter	Simultaneous Transmission
Licensed Transmitters	Routine evaluation required	SAR not required: Unlicensed only ○ when stand-alone 1-g SAR is not required and antenna is ≥ 5 cm from other antennas Licensed & Unlicensed ○ when the sum of the 1-g SAR is < 1.6 W/kg for all simultaneous transmitting antennas ○ when SAR to peak location separation ratio of simultaneous transmitting antenna pair is < 0.3 SAR required: Licensed & Unlicensed antenna pairs with SAR to peak location separation ratio ≥ 0.3; test is only required for the configuration that results in the highest SAR in stand-alone configuration for each wireless mode and exposure condition Note: simultaneous transmission exposure conditions for head and body can be different for different style phones; therefore, different test requirements may apply
Unlicensed Transmitters	When there is no simultaneous transmission – ○ output ≤ 60/f: SAR not required ○ output > 60/f: stand-alone SAR required When there is simultaneous transmission – Stand-alone SAR not required when ○ output ≤ 2·P_{Ref} and antenna is ≥ 5.0 cm from other antennas ○ output ≤ P_{Ref} and antenna is ≥ 2.5 cm from other antennas ○ output ≤ P_{Ref} and antenna is < 2.5 cm from other antennas, each with either output power ≤ P_{Ref} or 1-g SAR < 1.2 W/kg Otherwise stand-alone SAR is required When stand-alone SAR is required ○ test SAR on highest output channel for each wireless mode and exposure condition ○ if SAR for highest output channel is > 50% of SAR limit, evaluate all channels according to normal procedures	
Jaw, Mouth and Nose	Flat phantom SAR required ○ when measurement is required in tight regions of SAM and it is not feasible or the results can be questionable due to probe tilt, calibration, positioning and orientation issues ○ position rectangular and clam-shell phones according to flat phantom procedures and conduct SAR measurements for these specific locations	When simultaneous transmission SAR testing is required, contact the FCC Laboratory for interim guidance.

Table. 11.2 SAR Evaluation Requirements for Cellphones with Multiple Transmitters

FCC ID: BEJKM553
BT Max. RF output power: 3.60 dBm(2.29 mW)

Antenna separation distance between Main and BT/ WLAN: 4.4 cm
WLAN Max. RF output power: Wi-Fi 802.11b(16.46 dBm) / Wi-Fi 802.11g (14.01 dBm)

Because the conducted output power level of the BT transmitter is less than P_{ref}, and the BT antenna is more than 2.5 cm from the Main antenna, neither simultaneous SAR nor stand-alone BT SAR are required for the EUT. Based on the output power and antenna separation distance, a stand-slone WLAN SAR test is required. The summation of Main and WLAN is (0.598 + 0.069) = 0.667 < 1.6 mW/g. Therefore a simultaneous SAR evaluation is not required.

12. SAR TEST DATA SUMMARY

12.1 Measurement Results (GSM850 Head SAR Touch)

Frequency		Modulation	Conducted Power (dBm)		Battery	Phantom Position	Antenna Type	SAR(mW/g)
MHz	Channel		Begin	End				
824.2	128 (Low)	GSM850	32.46	32.44	Standard	Left Ear	Intenna	1.04
836.6	190 (Mid)	GSM850	32.44	32.36	Standard	Left Ear	Intenna	0.981
848.8	251 (High)	GSM850	32.40	32.35	Standard	Left Ear	Intenna	1.03
824.2	128 (Low)	GSM850	32.46	32.44	Standard	Right Ear	Intenna	0.835
836.6	190 (Mid)	GSM850	32.44	32.37	Standard	Right Ear	Intenna	0.845
848.8	251 (High)	GSM850	32.40	32.38	Standard	Right Ear	Intenna	0.806
ANSI/ IEEE C95.1 2005 – Safety Limit Spatial Peak Uncontrolled Exposure/ General Population						**Head 1.6 W/kg (mW/g)** Averaged over 1 gram		

NOTES:

1 The test data reported are the worst-case SAR value with the antenna-head position set in a typical configuration. Test procedures used are according to FCC/OET Bulletin 65, Supplement C [July 2001].
2 All modes of operation were investigated and the worst-case are reported.
3 Measured Depth of Simulating Tissue is 15.0 cm ± 0.2 cm.
4 Tissue parameters and temperatures are listed on the SAR plot.
5 Battery Type ☒ Standard ☐ Extended ☐ Slim
Batteries are fully charged for all readings.
6 Test Signal Call Mode ☐ Manual Test cord ☒ Base Station Simulator

12.2 Measurement Results (GSM850 Head SAR Tilt)

Frequency		Modulation	Conducted Power (dBm)		Battery	Phantom Position	Antenna Type	SAR(mW/g)
MHz	Channel		Begin	End				
836.6	190 (Mid)	GSM850	32.44	32.33	Standard	Left Tilt 15°	Intenna	0.442
836.6	190 (Mid)	GSM850	32.44	32.41	Standard	Right Tilt 15°	Intenna	0.426
ANSI/ IEEE C95.1 2005 – Safety Limit Spatial Peak Uncontrolled Exposure/ General Population						**Head 1.6 W/kg (mW/g)** Averaged over 1 gram		

NOTES:

1 The test data reported are the worst-case SAR value with the antenna-head position set in a typical configuration. Test procedures used are according to FCC/OET Bulletin 65, Supplement C [July 2001].
2 All modes of operation were investigated and the worst-case are reported.
3 Measured Depth of Simulating Tissue is 15.0 cm ± 0.2 cm.
4 Tissue parameters and temperatures are listed on the SAR plot.
5 Battery Type ☒ Standard ☐ Extended ☐ Slim
Batteries are fully charged for all readings.
6 Test Signal Call Mode ☐ Manual Test cord ☒ Base Station Simulator
7 Justification for reduced test configurations: per FCC/OET Supplement C (July, 2001), if the SAR measured at the middle channel for each test configuration (Left, right, cheek/touch, tilt/ear, extended and retracted) is at least 3.0 dB lower than the SAR limit, testing at the high and low channels is optional for such test configuration(s).

12.3 Measurement Results (GSM1900 Head SAR Touch)

Frequency		Modulation	Conducted Power (dBm)		Battery	Phantom Position	Antenna Type	SAR(mW/g)
MHz	Channel		Begin	End				
1880.0	661 (Mid)	GSM1900	30.49	30.48	Standard	Left Ear	Intenna	0.783
1850.2	512 (Low)	GSM1900	30.61	30.46	Standard	Right Ear	Intenna	0.780
1880.0	661 (Mid)	GSM1900	30.49	30.57	Standard	Right Ear	Intenna	0.962
1909.8	810 (High)	GSM1900	30.55	30.54	Standard	Right Ear	Intenna	0.930
ANSI/ IEEE C95.1 2005 – Safety Limit Spatial Peak Uncontrolled Exposure/ General Population						**Head 1.6 W/kg (mW/g)** Averaged over 1 gram		

NOTES:

1 The test data reported are the worst-case SAR value with the antenna-head position set in a typical configuration. Test procedures used are according to FCC/OET Bulletin 65, Supplement C [July 2001].
2 All modes of operation were investigated and the worst-case are reported.
3 Measured Depth of Simulating Tissue is 15.0 cm ± 0.2 cm.
4 Tissue parameters and temperatures are listed on the SAR plot.
5 Battery Type ☒ Standard ☐ Extended ☐ Slim
Batteries are fully charged for all readings.
6 Test Signal Call Mode ☐ Manual Test cord ☒ Base Station Simulator
7 Justification for reduced test configurations: per FCC/OET Supplement C (July, 2001), if the SAR measured at the middle channel for each test configuration (Left, right, cheek/touch, tilt/ear, extended and retracted) is at least 3.0 dB lower than the SAR limit, testing at the high and low channels is optional for such test configuration(s).

12.4 Measurement Results (GSM1900 Head SAR Tilt)

Frequency		Modulation	Conducted Power (dBm)		Battery	Phantom Position	Antenna Type	SAR(mW/g)
MHz	Channel		Begin	End				
1880.0	661 (Mid)	GSM1900	30.49	30.47	Standard	Left Tilt 15°	Intenna	0.590
1880.0	661 (Mid)	GSM1900	30.49	30.57	Standard	Right Tilt 15°	Intenna	0.713
ANSI/ IEEE C95.1 2005 – Safety Limit Spatial Peak Uncontrolled Exposure/ General Population						**Head 1.6 W/kg (mW/g)** Averaged over 1 gram		

NOTES:

1 The test data reported are the worst-case SAR value with the antenna-head position set in a typical configuration. Test procedures used are according to FCC/OET Bulletin 65, Supplement C [July 2001].
2 All modes of operation were investigated and the worst-case are reported.
3 Measured Depth of Simulating Tissue is 15.0 cm ± 0.2 cm.
4 Tissue parameters and temperatures are listed on the SAR plot.
5 Battery Type ☒ Standard ☐ Extended ☐ Slim
Batteries are fully charged for all readings.
6 Test Signal Call Mode ☐ Manual Test cord ☒ Base Station Simulator
7 Justification for reduced test configurations: per FCC/OET Supplement C (July, 2001), if the SAR measured at the middle channel for each test configuration (Left, right, cheek/touch, tilt/ear, extended and retracted) is at least 3.0 dB lower than the SAR limit, testing at the high and low channels is optional for such test configuration(s).

12.5 Measurement Results (GSM850 Body SAR)

Frequency		Modulation	Conducted Power (dBm)		Configuration	Phantom Position	Antenna Type	SAR(mW/g)
MHz	Channel		Begin	End				
836.6	190 (Mid)	GPRS 1Tx	32.42	32.24	Rear	2.0 cm without Holster	Intenna	0.357
836.6	190 (Mid)	GPRS 2Tx	31.60	31.52	Rear	2.0 cm without Holster	Intenna	0.598
836.6	190 (Mid)	GSM850	32.44	32.39	Rear	2.0 cm without Holster	Intenna	0.358
836.6	190 (Mid)	GPRS 2Tx	32.44	32.38	Front	2.0 cm without Holster	Intenna	0.496
ANSI/ IEEE C95.1 2005 – Safety Limit Spatial Peak Uncontrolled Exposure/ General Population						**Body 1.6 W/kg (mW/g)** Averaged over 1 gram		

NOTES:

1 The test data reported are the worst-case SAR value with the antenna-head position set in a typical configuration. Test procedures used are according to FCC/OET Bulletin 65, Supplement C [July 2001].
2 All modes of operation were investigated and the worst-case are reported.
3 Measured Depth of Simulating Tissue is 15.0 cm ± 0.2 cm.
4 Tissue parameters and temperatures are listed on the SAR plot.
5 Battery Type ☒ Standard ☐ Extended ☐ Slim
Batteries are fully charged for all readings.
6 Test Signal Call Mode ☐ Manual Test cord ☒ Base Station Simulator
7 Both side of the phone were tested and the worst-case side is reported.
8 Test Configuration ☐ With Holster ☒ Without Holster
9 HEADSET was connected.
10 Justification for reduced test configurations: per FCC/OET Supplement C (July, 2001), if the SAR measured at the middle channel for each test configuration (Left, right, cheek/touch, tilt/ear, extended and retracted) is at least 3.0 dB lower than the SAR limit, testing at the high and low channels is optional for such test configuration(s).

12.6 Measurement Results (GSM1900 Body SAR)

Frequency		Modulation	Conducted Power (dBm)		Configuration	Phantom Position	Antenna Type	SAR(mW/g)
MHz	Channel		Begin	End				
1 880.0	661 (Mid)	GPRS 1Tx	30.49	30.48	Rear	2.0 cm without Holster	Intenna	0.334
1 880.0	661 (Mid)	GPRS 2Tx	28.63	28.60	Rear	2.0 cm without Holster	Intenna	0.467
1 880.0	661 (Mid)	GSM1900	30.49	30.48	Rear	2.0 cm without Holster	Intenna	0.334
1 880.0	661 (Mid)	GPRS 2Tx	28.63	28.51	Front	2.0 cm without Holster	Intenna	0.346
ANSI/ IEEE C95.1 2005 – Safety Limit Spatial Peak Uncontrolled Exposure/ General Population						**Body 1.6 W/kg (mW/g)** Averaged over 1 gram		

NOTES:

1 The test data reported are the worst-case SAR value with the antenna-head position set in a typical configuration. Test procedures used are according to FCC/OET Bulletin 65, Supplement C [July 2001].
2 All modes of operation were investigated and the worst-case are reported.
3 Measured Depth of Simulating Tissue is 15.0 cm ± 0.2 cm.
4 Tissue parameters and temperatures are listed on the SAR plot.
5 Battery Type ☒ Standard ☐ Extended ☐ Slim
Batteries are fully charged for all readings.
6 Test Signal Call Mode ☐ Manual Test cord ☒ Base Station Simulator
7 Both side of the phone were tested and the worst-case side is reported.
8 Test Configuration ☐ With Holster ☒ Without Holster
9 HEADSET was connected.
10 Justification for reduced test configurations: per FCC/OET Supplement C (July, 2001), if the SAR measured at the middle channel for each test configuration (Left, right, cheek/touch, tilt/ear, extended and retracted) is at least 3.0 dB lower than the SAR limit, testing at the high and low channels is optional for such test configuration(s).

12.7 Measurement Results (802.11b/g Module Body SAR)

Frequency		Modulation	Conducted Power (dBm)		Configuration	Separation Distance	Data Rate	SAR(mW/g)
MHz	Channel		Begin	End				
2 412	1 (Mid)	802.11b	15.20	15.31	Rear	2.0 cm	1 Mbps	0.052
2 437	6 (Low)	802.11b	15.90	15.99	Rear	2.0 cm	1 Mbps	0.061
2 462	11 (High)	802.11b	15.58	15.62	Rear	2.0 cm	1 Mbps	0.069
2 462	11 (High)	802.11b	15.58	15.60	Front	2.0 cm	1 Mbps	0.016
ANSI/ IEEE C95.1 2005 – Safety Limit Spatial Peak Uncontrolled Exposure/ General Population						**Body 1.6 W/kg (mW/g)** Averaged over 1 gram		

NOTES:

1 The test data reported are the worst-case SAR value with the antenna-head position set in a typical configuration. Test procedures used are according to FCC/OET Bulletin 65, Supplement C [July 2001].
2 All modes of operation were investigated and the worst-case are reported.
3 Measured Depth of Simulating Tissue is 15.0 cm ± 0.2 cm.
4 Tissue parameters and temperatures are listed on the SAR plot.
5 Battery Type ☒ Standard with Charger ☐ Extended ☐ Slim
Batteries are fully charged for all readings.
6 Test Signal Call Mode ☒ Manual Test code ☐ Base Station Simulator

13. CONCLUSION

The SAR measurement indicates that the EUT complies with the RF radiation exposure limits of the ANSI/ IEEE C95.1 2005.

These measurements are taken to simulate the RF effects exposure under worst-case conditions. Precise laboratory measures were taken to assure repeatability of the tests.

14. REFERENCES

[1] Federal Communications Commission, OET Bulletin 65 (Edition 97-01), Supplement C (Edition 01-01), Evaluating Compliance with FCC Guidelines for Human Exposure to Radio frequency Electromagnetic Fields, July 2001.

[2] IEEE Standards Coordinating Committee 34 – IEEE Std. 1528-2003, IEE Recommended Practice or Determining the Peak Spatial-Average Specific Absorption Rate (SAR) in the Human Body from Wireless Communications Devices.

[3] Federal Communications Commission, ET Docket 93-62, Guidelines for Evaluating the Environmental Effects of Radio frequency Radiation, Aug. 1996.

[4] ANSI/IEEE C95.1 - 1991, American National Standard safety levels with respect to human exposure to radio frequency electromagnetic fields, 300 kHz to 100 GHz, New York: IEEE, Aug. 1992

[5] ANSI/IEEE C95.3 - 1991, IEEE Recommended Practice for the Measurement of Potentially Hazardous Electromagnetic Fields - RF and Microwave, New York: IEEE, 1992.

[6] NCRP, National Council on Radiation Protection and Measurements, Biological Effects and Exposure Criteria for Radio Frequency Electromagnetic Fields, NCRP Report No. 86, 1986. Reprinted Feb. 1995.

[7] T. Schmid, O. Egger, N. Kuster, Automated E-field scanning system for dosimetric assessments, IEEE Transaction on Microwave Theory and Techniques, vol. 44, Jan. 1996, pp. 105-113.

[8] K. Pokovic, T. Schmid, N. Kuster, Robust setup for precise calibration of E-field probes in tissue simulating liquids at mobile communications frequencies, ICECOM97, Oct. 1997, pp. 120-124.

[9]K. Pokoviº, T. Schmid, and N. Kuster, E-field Probe with improved isotropy in brain simulating liquids, Proceedings of the ELMAR, Zadar, Croatia, June 23-25, 1996, pp. 172-175.

[10] Schmid & Partner Engineering AG, Application Note: Data Storage and Evaluation, June 1998, p2.

[11] V. Hombach, K. Meier, M. Burkhardt, E. Kuhn, N. Kuster, The Dependence of EM Energy Absorption upon Human Head Modeling at 900 MHz, IEEE Transaction on Microwave Theory and Techniques, vol. 44 no. 10, Oct. 1996, pp. 1865-1873.

[12] N. Kuster and Q. Balzano, Energy absorption mechanism by biological bodies in the near field of dipole antennas above 300 MHz, IEEE Transaction on Vehicular Technology, vol. 41, no. 1, Feb. 1992, pp. 17-23.

[13] G. Hartsgrove, A. Kraszewski, A. Surowiec, Simulated Biological Materials for Electromagnetic Radiation Absorption Studies, University of Ottawa, Bioelectro magnetics, Canada: 1987, pp. 29-36.

[14] Q. Balzano, O. Garay, T. Manning Jr., Electromagnetic Energy Exposure of Simulated Users of Portable Cellular Telephones, IEEE Transactions on Vehicular Technology, vol. 44, no.3, Aug. 1995.

[15] W. Gander, Computer mathematick, Birkhaeuser, Basel, 1992.

[16] W.H. Press, S.A. Teukolsky, W.T. Vetterling, and B.P. Flannery, Numerical Recepies in C, The Art of Scientific Computing, Second edition, Cambridge University Press, 1992.

[17] Federal Communications Commission, OET Bulletin 65, Evaluating Compliance with FCC Guidelines for Human Exposure to Radiofrequency Electromagnetic Fields. Supplement C, Dec. 1997.

[18] N. Kuster, R. Kastle, T. Schmid, Dosimetric evaluation of mobile communications equipment with known precision, IEEE Transaction on Communications, vol. E80-B, no. 5, May 1997, pp. 645-652.

[19] CENELEC CLC/SC111B, European Prestandard (prENV 50166-2), Human Exposure to Electromagnetic Fields High-frequency: 10 kHz-300 GHz, Jan. 1995.

[20] Prof. Dr. Niels Kuster, ETH, EidgenØssische Technische Hoschschule Zòrich, Dosimetric Evaluation of the Cellular Phone.

[21] SAR Evaluation of Handsets with Multiple Transmitters and Antennas #648474.

[22] SAR Measurement Procedure for 802.11 a/b/g Transmitters #KDB 248227.

Attachment 1. – SAR Test Plots

Test Laboratory:	HCT CO., LTD
EUT Type:	Cellular/PCS GSM/EDGE Phone with Bluetooth & WLAN
	GPRS Class 10 and GPRS mode class B(GPRS and GSM, but not simultaneously)
Liquid Temperature:	21.2 ℃
Ambient Temperature:	21.4 ℃
Test Date:	Aug.21, 2010

DUT: KM553; Type: Bar; Serial: #1

Communication System: GSM 850; Frequency: 824.2 MHz;Duty Cycle: 1:8.3
Medium parameters used: f = 825 MHz; σ = 0.881 mho/m; ε_r = 42.1; ρ = 1000 kg/m^3
Phantom section: Left Section ; Measurement SW: DASY4, V4.7 Build 80; Postprocessing SW: SEMCAD, V1.8 Build 176

DASY4 Configuration:
- Probe: ES3DV3 - SN3161; ConvF(5.96, 5.96, 5.96); Calibrated: 2010-03-22
- Sensor-Surface: 4mm (Mechanical Surface Detection)
- Electronics: DAE4 Sn869; Calibrated: 2009-09-18
- Phantom: 835/900 Phamtom ; Type: SAM

Left touch 128/Area Scan (51x91x1): Measurement grid: dx=15mm, dy=15mm
Maximum value of SAR (interpolated) = 1.05 mW/g

Left touch 128/Zoom Scan (5x5x7)/Cube 0: Measurement grid: dx=8mm, dy=8mm, dz=5mm
Reference Value = 9.40 V/m; Power Drift = -0.016 dB
Peak SAR (extrapolated) = 1.38 W/kg
SAR(1 g) = 1.04 mW/g; SAR(10 g) = 0.717 mW/g
Maximum value of SAR (measured) = 1.08 mW/g

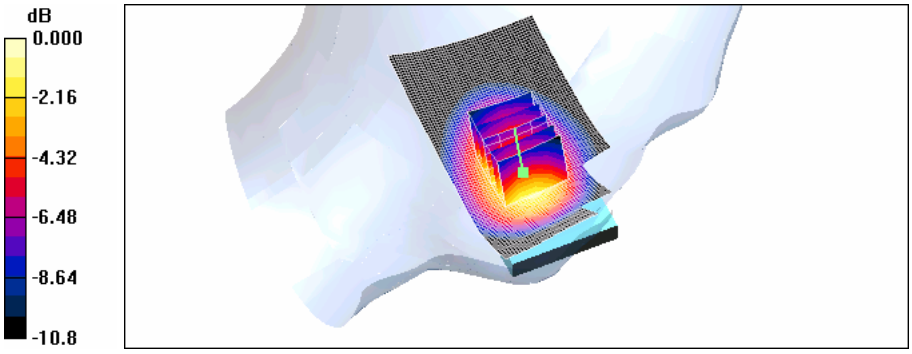

0 dB = 1.08mW/g

Test Laboratory:	HCT CO., LTD
EUT Type:	Cellular/PCS GSM/EDGE Phone with Bluetooth & WLAN
	GPRS Class 10 and GPRS mode class B(GPRS and GSM, but not simultaneously)
Liquid Temperature:	21.2 ℃
Ambient Temperature:	21.4 ℃
Test Date:	Aug.21, 2010

DUT: KM553; Type: Bar; Serial: #1

Communication System: GSM 850; Frequency: 836.6 MHz;Duty Cycle: 1:8.3
Medium parameters used (interpolated): f = 836.6 MHz; σ = 0.889 mho/m; ε_r = 42; ρ = 1000 kg/m^3
Phantom section: Left Section ; Measurement SW: DASY4, V4.7 Build 80; Postprocessing SW: SEMCAD, V1.8 Build 176

DASY4 Configuration:
- Probe: ES3DV3 - SN3161; ConvF(5.96, 5.96, 5.96); Calibrated: 2010-03-22
- Sensor-Surface: 4mm (Mechanical Surface Detection)
- Electronics: DAE4 Sn869; Calibrated: 2009-09-18
- Phantom: 835/900 Phamtom ; Type: SAM

Left touch 190/Area Scan (51x91x1): Measurement grid: dx=15mm, dy=15mm

Info: Interpolated medium parameters used for SAR evaluation.
Maximum value of SAR (interpolated) = 1.08 mW/g

Left touch 190/Zoom Scan (5x5x7)/Cube 0: Measurement grid: dx=8mm, dy=8mm, dz=5mm
Reference Value = 9.47 V/m; Power Drift = -0.080 dB
Peak SAR (extrapolated) = 1.31 W/kg
SAR(1 g) = 0.981 mW/g; SAR(10 g) = 0.679 mW/g

Info: Interpolated medium parameters used for SAR evaluation.
Maximum value of SAR (measured) = 1.04 mW/g

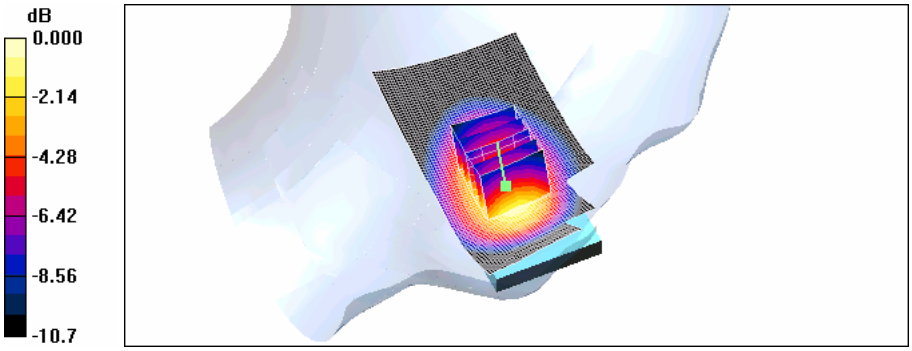

0 dB = 1.04mW/g

Test Laboratory:	HCT CO., LTD
EUT Type:	Cellular/PCS GSM/EDGE Phone with Bluetooth & WLAN
	GPRS Class 10 and GPRS mode class B(GPRS and GSM, but not simultaneously)
Liquid Temperature:	21.2 ℃
Ambient Temperature:	21.4 ℃
Test Date:	Aug.21, 2010

DUT: KM553; Type: Bar; Serial: #1

Communication System: GSM 850; Frequency: 848.8 MHz;Duty Cycle: 1:8.3
Medium parameters used (interpolated): f = 848.8 MHz; σ = 0.901 mho/m; ε_r = 41.9; ρ = 1000 kg/m^3
Phantom section: Left Section ; Measurement SW: DASY4, V4.7 Build 80; Postprocessing SW: SEMCAD, V1.8 Build 176

DASY4 Configuration:
- Probe: ES3DV3 - SN3161; ConvF(5.96, 5.96, 5.96); Calibrated: 2010-03-22
- Sensor-Surface: 4mm (Mechanical Surface Detection)
- Electronics: DAE4 Sn869; Calibrated: 2009-09-18
- Phantom: 835/900 Phamtom ; Type: SAM

Left touch 251/Area Scan (51x91x1): Measurement grid: dx=15mm, dy=15mm

Info: Interpolated medium parameters used for SAR evaluation.
Maximum value of SAR (interpolated) = 1.06 mW/g

Left touch 251/Zoom Scan (5x5x7)/Cube 0: Measurement grid: dx=8mm, dy=8mm, dz=5mm
Reference Value = 8.74 V/m; Power Drift = -0.046 dB
Peak SAR (extrapolated) = 1.41 W/kg
SAR(1 g) = 1.03 mW/g; SAR(10 g) = 0.710 mW/g

Info: Interpolated medium parameters used for SAR evaluation.
Maximum value of SAR (measured) = 1.08 mW/g

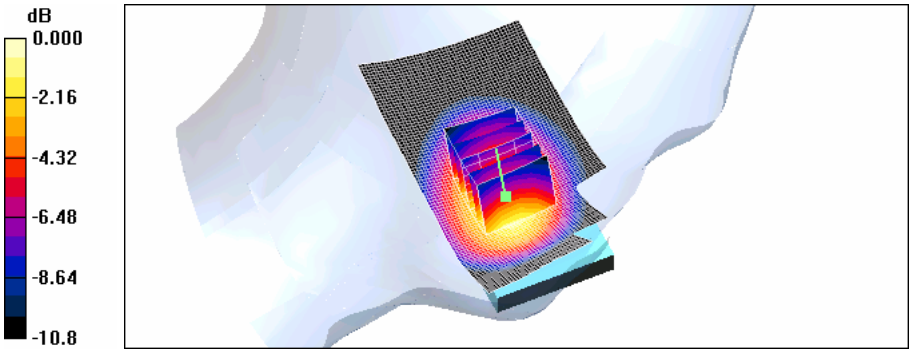

0 dB = 1.08mW/g

Test Laboratory:	HCT CO., LTD
EUT Type:	Cellular/PCS GSM/EDGE Phone with Bluetooth & WLAN
	GPRS Class 10 and GPRS mode class B(GPRS and GSM, but not simultaneously)
Liquid Temperature:	21.2 ℃
Ambient Temperature:	21.4 ℃
Test Date:	Aug.21, 2010

DUT: KM553; Type: Bar; Serial: #1

Communication System: GSM 850; Frequency: 824.2 MHz;Duty Cycle: 1:8.3
Medium parameters used: f = 825 MHz; σ = 0.881 mho/m; ε_r = 42.1; ρ = 1000 kg/m^3
Phantom section: Right Section ; Measurement SW: DASY4, V4.7 Build 80; Postprocessing SW: SEMCAD, V1.8 Build 176

DASY4 Configuration:
- Probe: ES3DV3 - SN3161; ConvF(5.96, 5.96, 5.96); Calibrated: 2010-03-22
- Sensor-Surface: 4mm (Mechanical Surface Detection)
- Electronics: DAE4 Sn869; Calibrated: 2009-09-18
- Phantom: 835/900 Phamtom ; Type: SAM

Right touch 128/Area Scan (51x91x1): Measurement grid: dx=15mm, dy=15mm
Maximum value of SAR (interpolated) = 0.922 mW/g

Right touch 128/Zoom Scan (5x5x7)/Cube 0: Measurement grid: dx=8mm, dy=8mm, dz=5mm
Reference Value = 9.38 V/m; Power Drift = -0.083 dB
Peak SAR (extrapolated) = 1.09 W/kg
SAR(1 g) = 0.835 mW/g; SAR(10 g) = 0.585 mW/g
Maximum value of SAR (measured) = 0.885 mW/g

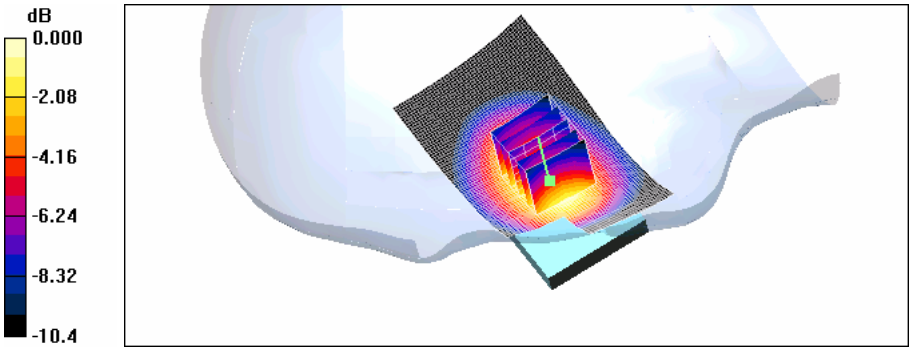

0 dB = 0.885mW/g

Test Laboratory:	HCT CO., LTD
EUT Type:	Cellular/PCS GSM/EDGE Phone with Bluetooth & WLAN
	GPRS Class 10 and GPRS mode class B(GPRS and GSM, but not simultaneously)
Liquid Temperature:	21.2 ℃
Ambient Temperature:	21.4 ℃
Test Date:	Aug.21, 2010

DUT: KM553; Type: Bar; Serial: #1

Communication System: GSM 850; Frequency: 836.6 MHz;Duty Cycle: 1:8.3
Medium parameters used (interpolated): f = 836.6 MHz; σ = 0.889 mho/m; ε_r = 42; ρ = 1000 kg/m^3
Phantom section: Right Section ; Measurement SW: DASY4, V4.7 Build 80; Postprocessing SW: SEMCAD, V1.8 Build 176

DASY4 Configuration:
- Probe: ES3DV3 - SN3161; ConvF(5.96, 5.96, 5.96); Calibrated: 2010-03-22
- Sensor-Surface: 4mm (Mechanical Surface Detection)
- Electronics: DAE4 Sn869; Calibrated: 2009-09-18
- Phantom: 835/900 Phamtom ; Type: SAM

Right touch 190/Area Scan (51x91x1): Measurement grid: dx=15mm, dy=15mm

Info: Interpolated medium parameters used for SAR evaluation.
Maximum value of SAR (interpolated) = 0.946 mW/g

Right touch 190/Zoom Scan (5x5x7)/Cube 0: Measurement grid: dx=8mm, dy=8mm, dz=5mm
Reference Value = 9.63 V/m; Power Drift = -0.012 dB
Peak SAR (extrapolated) = 1.09 W/kg
SAR(1 g) = 0.845 mW/g; SAR(10 g) = 0.594 mW/g

Info: Interpolated medium parameters used for SAR evaluation.
Maximum value of SAR (measured) = 0.897 mW/g

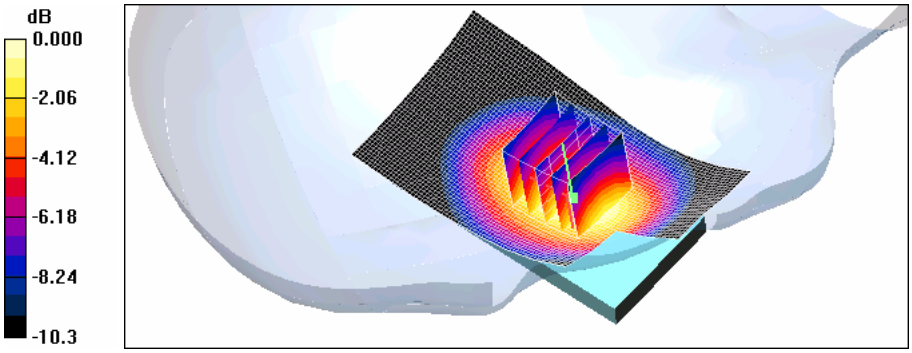

0 dB = 0.897mW/g

Test Laboratory:	HCT CO., LTD
EUT Type:	Cellular/PCS GSM/EDGE Phone with Bluetooth & WLAN
	GPRS Class 10 and GPRS mode class B(GPRS and GSM, but not simultaneously)
Liquid Temperature:	21.2 ℃
Ambient Temperature:	21.4 ℃
Test Date:	Aug.21, 2010

DUT: KM553; Type: Bar; Serial: #1

Communication System: GSM 850; Frequency: 848.8 MHz;Duty Cycle: 1:8.3
Medium parameters used (interpolated): f = 848.8 MHz; σ = 0.901 mho/m; ε_r = 41.9; ρ = 1000 kg/m^3
Phantom section: Right Section ; Measurement SW: DASY4, V4.7 Build 80; Postprocessing SW: SEMCAD, V1.8 Build 176

DASY4 Configuration:
- Probe: ES3DV3 - SN3161; ConvF(5.96, 5.96, 5.96); Calibrated: 2010-03-22
- Sensor-Surface: 4mm (Mechanical Surface Detection)
- Electronics: DAE4 Sn869; Calibrated: 2009-09-18
- Phantom: 835/900 Phamtom ; Type: SAM

Right touch 251/Area Scan (51x91x1): Measurement grid: dx=15mm, dy=15mm

Info: Interpolated medium parameters used for SAR evaluation.
Maximum value of SAR (interpolated) = 0.892 mW/g

Right touch 251/Zoom Scan (5x5x7)/Cube 0: Measurement grid: dx=8mm, dy=8mm, dz=5mm
Reference Value = 9.09 V/m; Power Drift = -0.035 dB
Peak SAR (extrapolated) = 1.05 W/kg
SAR(1 g) = 0.806 mW/g; SAR(10 g) = 0.562 mW/g

Info: Interpolated medium parameters used for SAR evaluation.
Maximum value of SAR (measured) = 0.854 mW/g

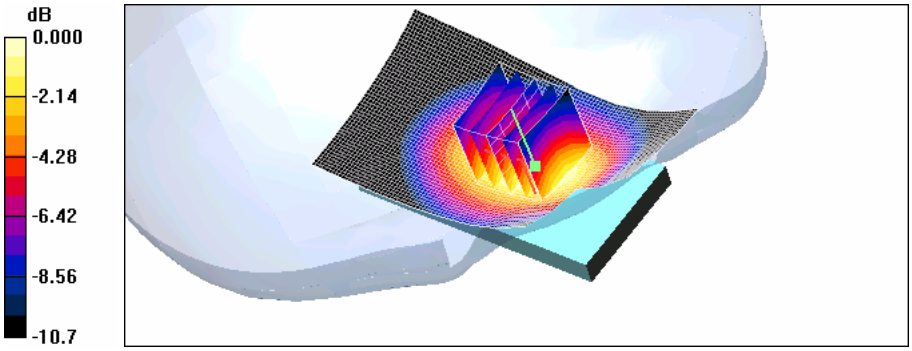

0 dB = 0.854mW/g

Test Laboratory:	HCT CO., LTD
EUT Type:	Cellular/PCS GSM/EDGE Phone with Bluetooth & WLAN
	GPRS Class 10 and GPRS mode class B(GPRS and GSM, but not simultaneously)
Liquid Temperature:	21.2 ℃
Ambient Temperature:	21.4 ℃
Test Date:	Aug.21, 2010

DUT: KM553; Type: Bar; Serial: #1

Communication System: GSM 850; Frequency: 836.6 MHz;Duty Cycle: 1:8.3
Medium parameters used (interpolated): f = 836.6 MHz; σ = 0.889 mho/m; ε_r = 42; ρ = 1000 kg/m^3
Phantom section: Left Section ; Measurement SW: DASY4, V4.7 Build 80; Postprocessing SW: SEMCAD, V1.8 Build 176

DASY4 Configuration:
- Probe: ES3DV3 - SN3161; ConvF(5.96, 5.96, 5.96); Calibrated: 2010-03-22
- Sensor-Surface: 4mm (Mechanical Surface Detection)
- Electronics: DAE4 Sn869; Calibrated: 2009-09-18
- Phantom: 835/900 Phamtom ; Type: SAM

Left tilt 190/Area Scan (51x91x1): Measurement grid: dx=15mm, dy=15mm

Info: Interpolated medium parameters used for SAR evaluation.
Maximum value of SAR (interpolated) = 0.474 mW/g

Left tilt 190/Zoom Scan (5x5x7)/Cube 0: Measurement grid: dx=8mm, dy=8mm, dz=5mm
Reference Value = 13.3 V/m; Power Drift = -0.110 dB
Peak SAR (extrapolated) = 0.559 W/kg
SAR(1 g) = 0.442 mW/g; SAR(10 g) = 0.323 mW/g

Info: Interpolated medium parameters used for SAR evaluation.
Maximum value of SAR (measured) = 0.467 mW/g

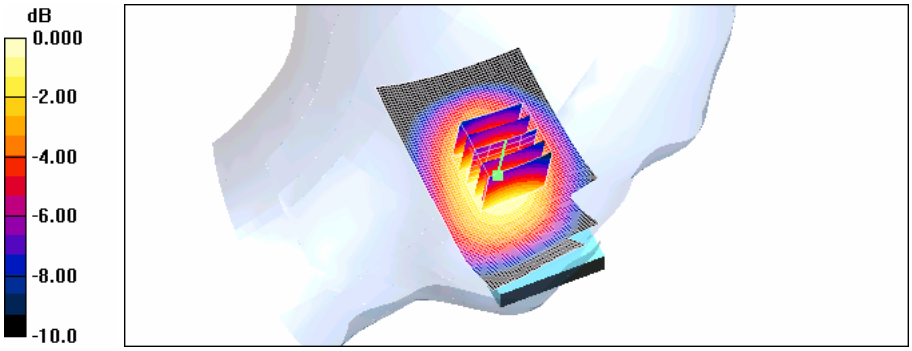

0 dB = 0.467mW/g

Test Laboratory:	HCT CO., LTD
EUT Type:	Cellular/PCS GSM/EDGE Phone with Bluetooth & WLAN
	GPRS Class 10 and GPRS mode class B(GPRS and GSM, but not simultaneously)
Liquid Temperature:	21.2 ℃
Ambient Temperature:	21.4 ℃
Test Date:	Aug.21, 2010

DUT: KM553; Type: Bar; Serial: #1

Communication System: GSM 850; Frequency: 836.6 MHz;Duty Cycle: 1:8.3
Medium parameters used (interpolated): f = 836.6 MHz; σ = 0.889 mho/m; ε_r = 42; ρ = 1000 kg/m^3
Phantom section: Right Section ; Measurement SW: DASY4, V4.7 Build 80; Postprocessing SW: SEMCAD, V1.8 Build 176

DASY4 Configuration:
- Probe: ES3DV3 - SN3161; ConvF(5.96, 5.96, 5.96); Calibrated: 2010-03-22
- Sensor-Surface: 4mm (Mechanical Surface Detection)
- Electronics: DAE4 Sn869; Calibrated: 2009-09-18
- Phantom: 835/900 Phamtom ; Type: SAM

Right tilt 190/Area Scan (51x91x1): Measurement grid: dx=15mm, dy=15mm

Info: Interpolated medium parameters used for SAR evaluation.
Maximum value of SAR (interpolated) = 0.452 mW/g

Right tilt 190/Zoom Scan (5x5x7)/Cube 0: Measurement grid: dx=8mm, dy=8mm, dz=5mm
Reference Value = 16.1 V/m; Power Drift = -0.053 dB
Peak SAR (extrapolated) = 0.552 W/kg
SAR(1 g) = 0.426 mW/g; SAR(10 g) = 0.309 mW/g

Info: Interpolated medium parameters used for SAR evaluation.
Maximum value of SAR (measured) = 0.453 mW/g

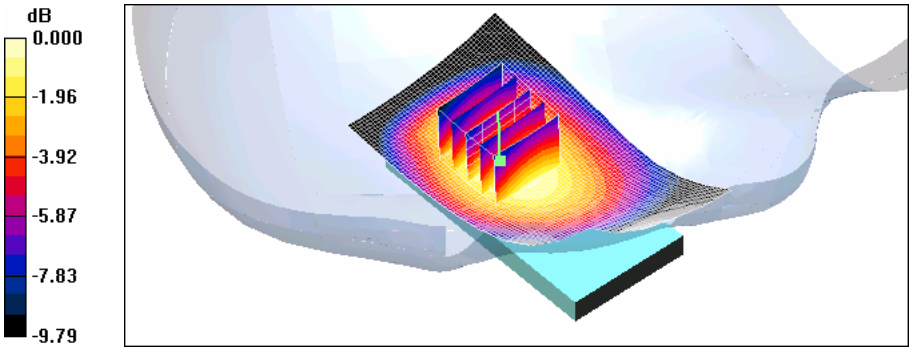

0 dB = 0.453mW/g

Test Laboratory:	HCT CO., LTD
EUT Type:	Cellular/PCS GSM/EDGE Phone with Bluetooth & WLAN
	GPRS Class 10 and GPRS mode class B(GPRS and GSM, but not simultaneously)
Liquid Temperature:	21.1 ℃
Ambient Temperature:	21.3 ℃
Test Date:	Aug.22, 2010

DUT: KM553; Type: Bar; Serial: #1

Communication System: GSM 1900; Frequency: 1880 MHz;Duty Cycle: 1:8.3
Medium parameters used: f = 1880 MHz; σ = 1.38 mho/m; ε_r = 40.9; ρ = 1000 kg/m^3
Phantom section: Left Section ; Measurement SW: DASY4, V4.7 Build 80; Postprocessing SW: SEMCAD, V1.8 Build 176

DASY4 Configuration:
- Probe: ES3DV3 - SN3161; ConvF(4.79, 4.79, 4.79); Calibrated: 2010-03-22
- Sensor-Surface: 4mm (Mechanical Surface Detection)
- Electronics: DAE4 Sn869; Calibrated: 2009-09-18
- Phantom: 1800/1900 Phantom; Type: SAM

Left touch 661/Area Scan (51x91x1): Measurement grid: dx=15mm, dy=15mm
Maximum value of SAR (interpolated) = 0.911 mW/g

Left touch 661/Zoom Scan (5x5x7)/Cube 0: Measurement grid: dx=8mm, dy=8mm, dz=5mm
Reference Value = 11.0 V/m; Power Drift = -0.022 dB
Peak SAR (extrapolated) = 1.26 W/kg
SAR(1 g) = 0.783 mW/g; SAR(10 g) = 0.453 mW/g
Maximum value of SAR (measured) = 0.861 mW/g

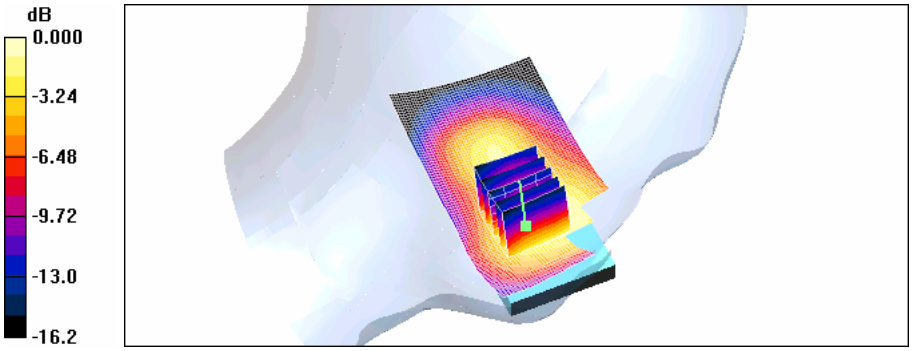

0 dB = 0.861mW/g

Test Laboratory:	HCT CO., LTD
EUT Type:	Cellular/PCS GSM/EDGE Phone with Bluetooth & WLAN
	GPRS Class 10 and GPRS mode class B(GPRS and GSM, but not simultaneously)
Liquid Temperature:	21.1 ℃
Ambient Temperature:	21.3 ℃
Test Date:	Aug.22, 2010

DUT: KM553; Type: Bar; Serial: #1

Communication System: GSM 1900; Frequency: 1850.2 MHz;Duty Cycle: 1:8.3
Medium parameters used (interpolated): f = 1850.2 MHz; σ = 1.36 mho/m; ε_r = 41.1; ρ = 1000 kg/m^3
Phantom section: Right Section ; Measurement SW: DASY4, V4.7 Build 80; Postprocessing SW: SEMCAD, V1.8 Build 176

DASY4 Configuration:
- Probe: ES3DV3 - SN3161; ConvF(4.79, 4.79, 4.79); Calibrated: 2010-03-22
- Sensor-Surface: 4mm (Mechanical Surface Detection)
- Electronics: DAE4 Sn869; Calibrated: 2009-09-18
- Phantom: 1800/1900 Phantom; Type: SAM

Right touch 512/Area Scan (51x91x1): Measurement grid: dx=15mm, dy=15mm

Info: Interpolated medium parameters used for SAR evaluation.
Maximum value of SAR (interpolated) = 0.852 mW/g

Right touch 512/Zoom Scan (5x5x7)/Cube 0: Measurement grid: dx=8mm, dy=8mm, dz=5mm
Reference Value = 7.08 V/m; Power Drift = -0.150 dB
Peak SAR (extrapolated) = 1.30 W/kg
SAR(1 g) = 0.780 mW/g; SAR(10 g) = 0.450 mW/g

Info: Interpolated medium parameters used for SAR evaluation.
Maximum value of SAR (measured) = 0.853 mW/g

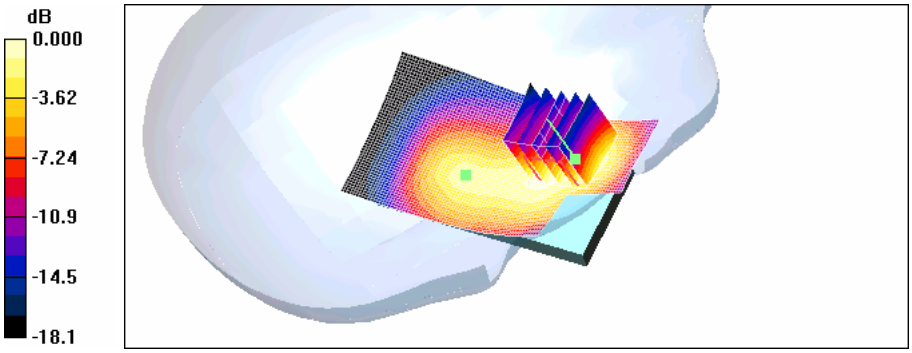

0 dB = 0.853mW/g

Test Laboratory:	HCT CO., LTD
EUT Type:	Cellular/PCS GSM/EDGE Phone with Bluetooth & WLAN
	GPRS Class 10 and GPRS mode class B(GPRS and GSM, but not simultaneously)
Liquid Temperature:	21.1 ℃
Ambient Temperature:	21.3 ℃
Test Date:	Aug.22, 2010

DUT: KM553; Type: Bar; Serial: #1

Communication System: GSM 1900; Frequency: 1880 MHz;Duty Cycle: 1:8.3
Medium parameters used: f = 1880 MHz; σ = 1.38 mho/m; ε_r = 40.9; ρ = 1000 kg/m^3
Phantom section: Right Section ; Measurement SW: DASY4, V4.7 Build 80; Postprocessing SW: SEMCAD, V1.8 Build 176

DASY4 Configuration:
- Probe: ES3DV3 - SN3161; ConvF(4.79, 4.79, 4.79); Calibrated: 2010-03-22
- Sensor-Surface: 4mm (Mechanical Surface Detection)
- Electronics: DAE4 Sn869; Calibrated: 2009-09-18
- Phantom: 1800/1900 Phantom; Type: SAM

Right touch 661/Area Scan (51x91x1): Measurement grid: dx=15mm, dy=15mm
Maximum value of SAR (interpolated) = 1.04 mW/g

Right touch 661/Zoom Scan (5x5x7)/Cube 0: Measurement grid: dx=8mm, dy=8mm, dz=5mm
Reference Value = 7.03 V/m; Power Drift = 0.075 dB
Peak SAR (extrapolated) = 1.59 W/kg
SAR(1 g) = 0.962 mW/g; SAR(10 g) = 0.552 mW/g
Maximum value of SAR (measured) = 1.04 mW/g

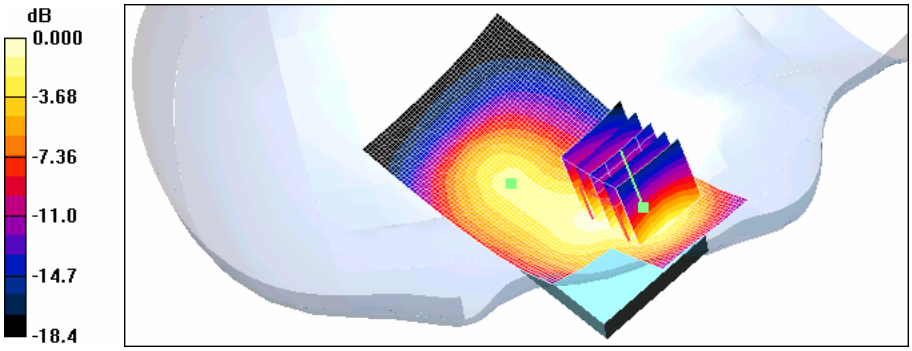

0 dB = 1.04mW/g

Test Laboratory:	HCT CO., LTD
EUT Type:	Cellular/PCS GSM/EDGE Phone with Bluetooth & WLAN
	GPRS Class 10 and GPRS mode class B(GPRS and GSM, but not simultaneously)
Liquid Temperature:	21.1 ℃
Ambient Temperature:	21.3 ℃
Test Date:	Aug.22, 2010

DUT: KM553; Type: Bar; Serial: #1

Communication System: GSM 1900; Frequency: 1909.8 MHz;Duty Cycle: 1:8.3
Medium parameters used: f = 1910 MHz; σ = 1.41 mho/m; ε_r = 40.7; ρ = 1000 kg/m^3
Phantom section: Right Section ; Measurement SW: DASY4, V4.7 Build 55; Postprocessing SW: SEMCAD, V1.8 Build 176

DASY4 Configuration:
- Probe: ES3DV3 - SN3161; ConvF(4.79, 4.79, 4.79); Calibrated: 2010-03-22
- Sensor-Surface: 4mm (Mechanical Surface Detection)
- Electronics: DAE4 Sn869; Calibrated: 2009-09-18
- Phantom: 1800/1900 Phantom; Type: SAM

Right touch 810/Area Scan (51x91x1): Measurement grid: dx=15mm, dy=15mm
Maximum value of SAR (interpolated) = 1.02 mW/g

Right touch 810/Zoom Scan (5x5x7)/Cube 0: Measurement grid: dx=8mm, dy=8mm, dz=5mm
Reference Value = 8.21 V/m; Power Drift = -0.011 dB
Peak SAR (extrapolated) = 1.58 W/kg
SAR(1 g) = 0.930 mW/g; SAR(10 g) = 0.528 mW/g
Maximum value of SAR (measured) = 1.02 mW/g

Right touch 810/Zoom Scan (5x5x7)/Cube 1: Measurement grid: dx=8mm, dy=8mm, dz=5mm
Reference Value = 8.21 V/m; Power Drift = -0.011 dB
Peak SAR (extrapolated) = 1.08 W/kg
SAR(1 g) = 0.694 mW/g; SAR(10 g) = 0.424 mW/g
maximum value of SAR (measured) = 0.776 mW/g

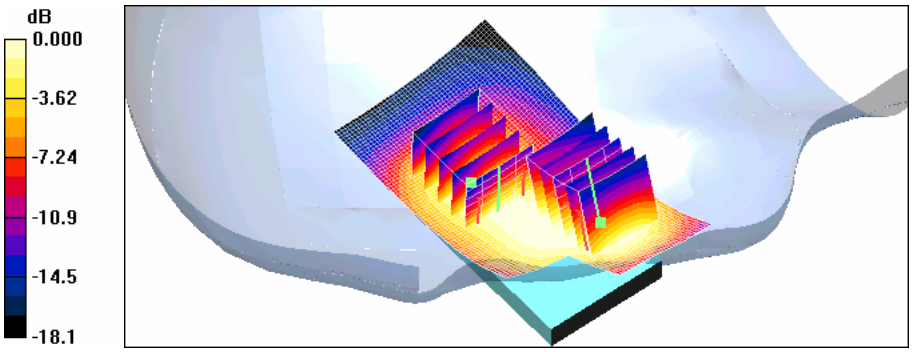

0 dB = 0.776mW/g

Test Laboratory:	HCT CO., LTD
EUT Type:	Cellular/PCS GSM/EDGE Phone with Bluetooth & WLAN
	GPRS Class 10 and GPRS mode class B(GPRS and GSM, but not simultaneously)
Liquid Temperature:	21.1 ℃
Ambient Temperature:	21.3 ℃
Test Date:	Aug.22, 2010

DUT: KM553; Type: Bar; Serial: #1

Communication System: GSM 1900; Frequency: 1880 MHz;Duty Cycle: 1:8.3
Medium parameters used: f = 1880 MHz; σ = 1.38 mho/m; ε_r = 40.9; ρ = 1000 kg/m^3
Phantom section: Left Section ; Measurement SW: DASY4, V4.7 Build 80; Postprocessing SW: SEMCAD, V1.8 Build 176

DASY4 Configuration:
- Probe: ES3DV3 - SN3161; ConvF(4.79, 4.79, 4.79); Calibrated: 2010-03-22
- Sensor-Surface: 4mm (Mechanical Surface Detection)
- Electronics: DAE4 Sn869; Calibrated: 2009-09-18
- Phantom: 1800/1900 Phantom; Type: SAM

Left tilt 661/Area Scan (51x91x1): Measurement grid: dx=15mm, dy=15mm
Maximum value of SAR (interpolated) = 0.698 mW/g

Left tilt 661/Zoom Scan (5x5x7)/Cube 0: Measurement grid: dx=8mm, dy=8mm, dz=5mm
Reference Value = 16.4 V/m; Power Drift = 0.011 dB
Peak SAR (extrapolated) = 0.884 W/kg
SAR(1 g) = 0.590 mW/g; SAR(10 g) = 0.355 mW/g
Maximum value of SAR (measured) = 0.646 mW/g

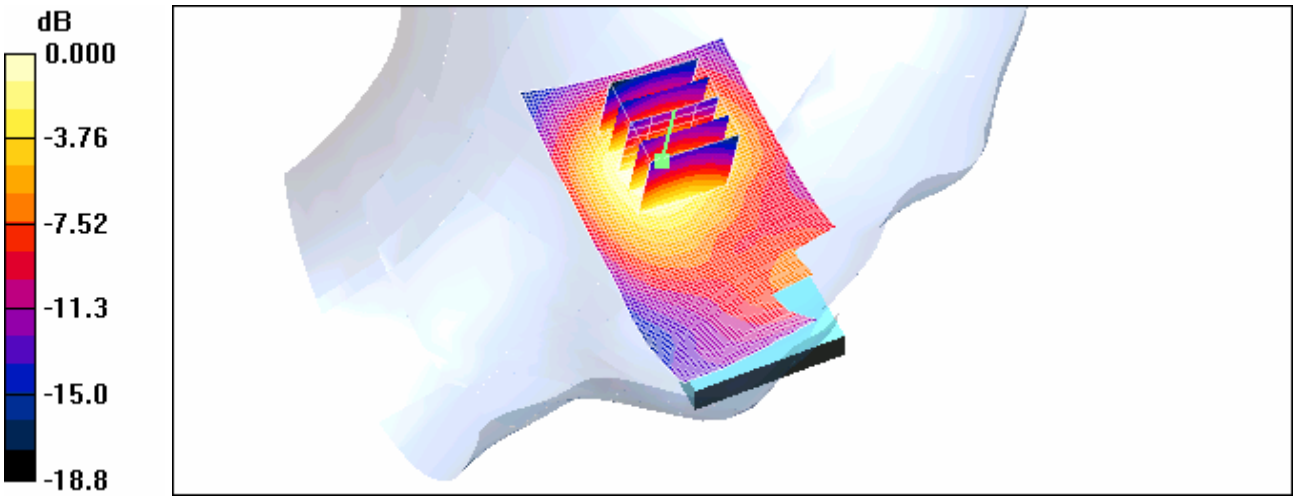

0 dB = 0.646mW/g

Test Laboratory:	HCT CO., LTD
EUT Type:	Cellular/PCS GSM/EDGE Phone with Bluetooth & WLAN
	GPRS Class 10 and GPRS mode class B(GPRS and GSM, but not simultaneously)
Liquid Temperature:	21.1 ℃
Ambient Temperature:	21.3 ℃
Test Date:	Aug.22, 2010

DUT: KM553; Type: Bar; Serial: #1

Communication System: GSM 1900; Frequency: 1880 MHz;Duty Cycle: 1:8.3
Medium parameters used: f = 1880 MHz; σ = 1.38 mho/m; ε_r = 40.9; ρ = 1000 kg/m^3
Phantom section: Right Section ; Measurement SW: DASY4, V4.7 Build 80; Postprocessing SW: SEMCAD, V1.8 Build 176

DASY4 Configuration:
- Probe: ES3DV3 - SN3161; ConvF(4.79, 4.79, 4.79); Calibrated: 2010-03-22
- Sensor-Surface: 4mm (Mechanical Surface Detection)
- Electronics: DAE4 Sn869; Calibrated: 2009-09-18
- Phantom: 1800/1900 Phantom; Type: SAM

Right tilt 661/Area Scan (51x91x1): Measurement grid: dx=15mm, dy=15mm
Maximum value of SAR (interpolated) = 0.874 mW/g

Right tilt 661/Zoom Scan (5x5x7)/Cube 0: Measurement grid: dx=8mm, dy=8mm, dz=5mm
Reference Value = 12.7 V/m; Power Drift = -0.084 dB
Peak SAR (extrapolated) = 1.14 W/kg
SAR(1 g) = 0.713 mW/g; SAR(10 g) = 0.416 mW/g
Maximum value of SAR (measured) = 0.774 mW/g

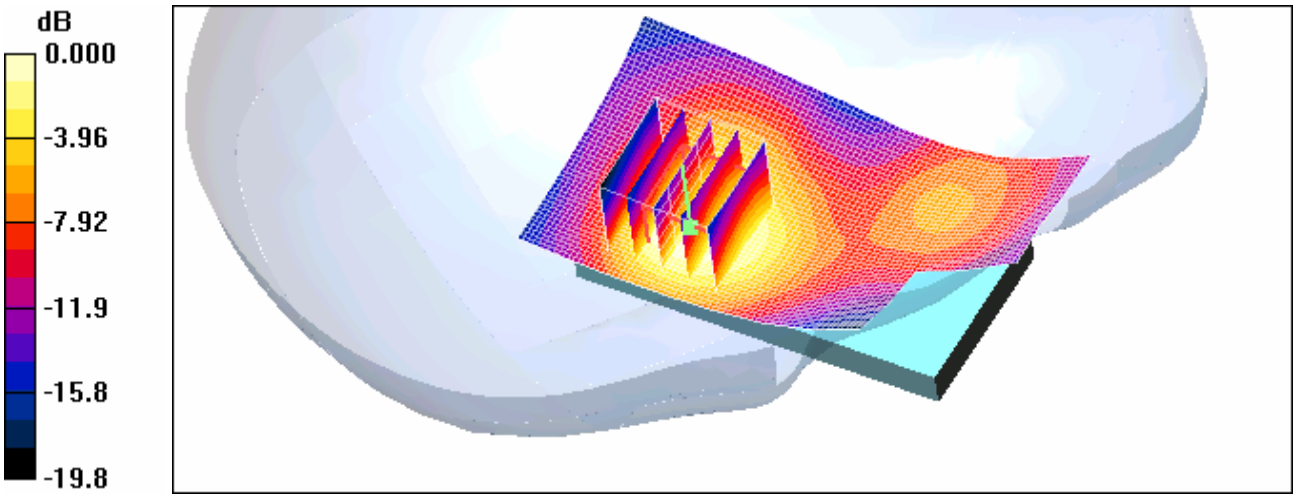

0 dB = 0.774mW/g

Test Laboratory:	HCT CO., LTD
EUT Type:	Cellular/PCS GSM/EDGE Phone with Bluetooth & WLAN
	GPRS Class 10 and GPRS mode class B(GPRS and GSM, but not simultaneously)
Liquid Temperature:	21.2 ℃
Ambient Temperature:	21.4 ℃
Test Date:	Aug.21, 2010

DUT: KM553; Type: Bar; Serial: #1

Communication System: GSM 850; Frequency: 836.6 MHz;Duty Cycle: 1:8.3
Medium parameters used (interpolated): f = 836.6 MHz; σ = 0.983 mho/m; ε_r = 56.9; ρ = 1000 kg/m^3
Phantom section: Flat Section ; Measurement SW: DASY4, V4.7 Build 80; Postprocessing SW: SEMCAD, V1.8 Build 176

DASY4 Configuration:
- Probe: ES3DV3 - SN3161; ConvF(5.84, 5.84, 5.84); Calibrated: 2010-03-22
- Sensor-Surface: 4mm (Mechanical Surface Detection)
- Electronics: DAE4 Sn869; Calibrated: 2009-09-18
- Phantom: 835/900 Phamtom ; Type: SAM

Body 190/Area Scan (61x91x1): Measurement grid: dx=15mm, dy=15mm

Info: Interpolated medium parameters used for SAR evaluation.
Maximum value of SAR (interpolated) = 0.375 mW/g

Body 190/Zoom Scan (5x5x7)/Cube 0: Measurement grid: dx=8mm, dy=8mm, dz=5mm
Reference Value = 10.9 V/m; Power Drift = -0.176 dB
Peak SAR (extrapolated) = 0.461 W/kg
SAR(1 g) = 0.357 mW/g; SAR(10 g) = 0.262 mW/g

Info: Interpolated medium parameters used for SAR evaluation.
Maximum value of SAR (measured) = 0.376 mW/g

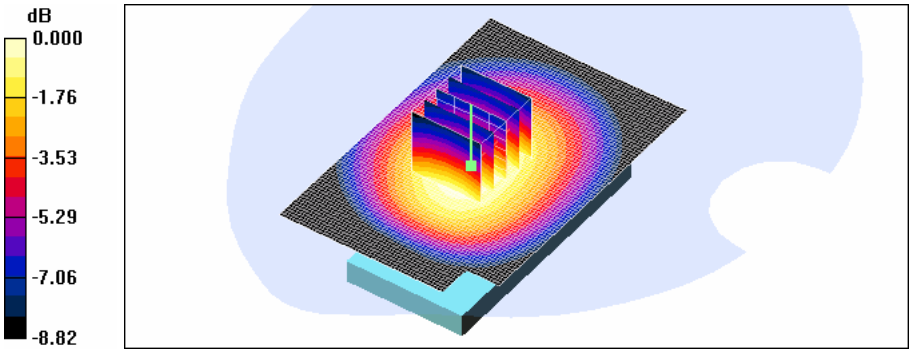

0 dB = 0.376mW/g

Test Laboratory:	HCT CO., LTD
EUT Type:	Cellular/PCS GSM/EDGE Phone with Bluetooth & WLAN
	GPRS Class 10 and GPRS mode class B(GPRS and GSM, but not simultaneously)
Liquid Temperature:	21.2 ℃
Ambient Temperature:	21.4 ℃
Test Date:	Aug.21, 2010

DUT: KM553; Type: Bar; Serial: #1

Communication System: GSM 850; Frequency: 836.6 MHz;Duty Cycle: 1:4.15
Medium parameters used (interpolated): f = 836.6 MHz; σ = 0.983 mho/m; ε_r = 56.9; ρ = 1000 kg/m^3
Phantom section: Flat Section ; Measurement SW: DASY4, V4.7 Build 80; Postprocessing SW: SEMCAD, V1.8 Build 176

DASY4 Configuration:
- Probe: ES3DV3 - SN3161; ConvF(5.84, 5.84, 5.84); Calibrated: 2010-03-22
- Sensor-Surface: 4mm (Mechanical Surface Detection)
- Electronics: DAE4 Sn869; Calibrated: 2009-09-18
- Phantom: 835/900 Phamtom ; Type: SAM

Body 190/Area Scan (61x91x1): Measurement grid: dx=15mm, dy=15mm

Info: Interpolated medium parameters used for SAR evaluation.
Maximum value of SAR (interpolated) = 0.629 mW/g

Body 190/Zoom Scan (5x5x7)/Cube 0: Measurement grid: dx=8mm, dy=8mm, dz=5mm
Reference Value = 14.0 V/m; Power Drift = -0.083 dB
Peak SAR (extrapolated) = 0.776 W/kg
SAR(1 g) = 0.598 mW/g; SAR(10 g) = 0.437 mW/g

Info: Interpolated medium parameters used for SAR evaluation.
Maximum value of SAR (measured) = 0.632 mW/g

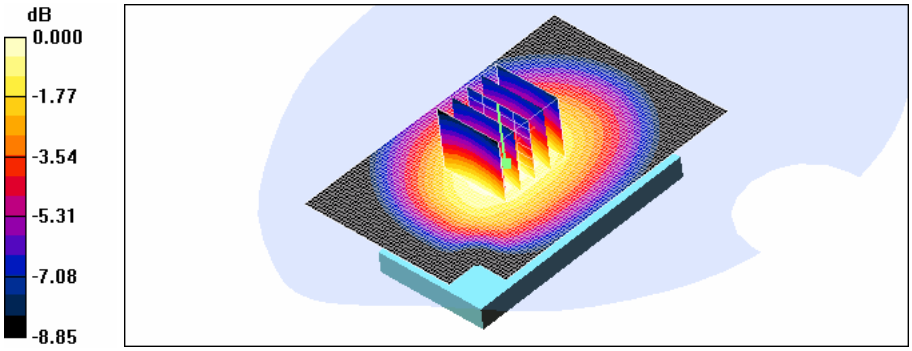

0 dB = 0.632mW/g

Test Laboratory:	HCT CO., LTD
EUT Type:	Cellular/PCS GSM/EDGE Phone with Bluetooth & WLAN
	GPRS Class 10 and GPRS mode class B(GPRS and GSM, but not simultaneously)
Liquid Temperature:	21.2 ℃
Ambient Temperature:	21.4 ℃
Test Date:	Aug.21, 2010

DUT: KM553; Type: Bar; Serial: #1

Communication System: GSM 850; Frequency: 836.6 MHz;Duty Cycle: 1:8.3
Medium parameters used (interpolated): f = 836.6 MHz; σ = 0.983 mho/m; ε_r = 56.9; ρ = 1000 kg/m^3
Phantom section: Flat Section ; Measurement SW: DASY4, V4.7 Build 80; Postprocessing SW: SEMCAD, V1.8 Build 176

DASY4 Configuration:
- Probe: ES3DV3 - SN3161; ConvF(5.84, 5.84, 5.84); Calibrated: 2010-03-22
- Sensor-Surface: 4mm (Mechanical Surface Detection)
- Electronics: DAE4 Sn869; Calibrated: 2009-09-18
- Phantom: 835/900 Phamtom ; Type: SAM

Body 190/Area Scan (61x91x1): Measurement grid: dx=15mm, dy=15mm

Info: Interpolated medium parameters used for SAR evaluation.
Maximum value of SAR (interpolated) = 0.376 mW/g

Body 190/Zoom Scan (5x5x7)/Cube 0: Measurement grid: dx=8mm, dy=8mm, dz=5mm
Reference Value = 10.8 V/m; Power Drift = -0.050 dB
Peak SAR (extrapolated) = 0.466 W/kg
SAR(1 g) = 0.358 mW/g; SAR(10 g) = 0.263 mW/g

Info: Interpolated medium parameters used for SAR evaluation.
Maximum value of SAR (measured) = 0.378 mW/g

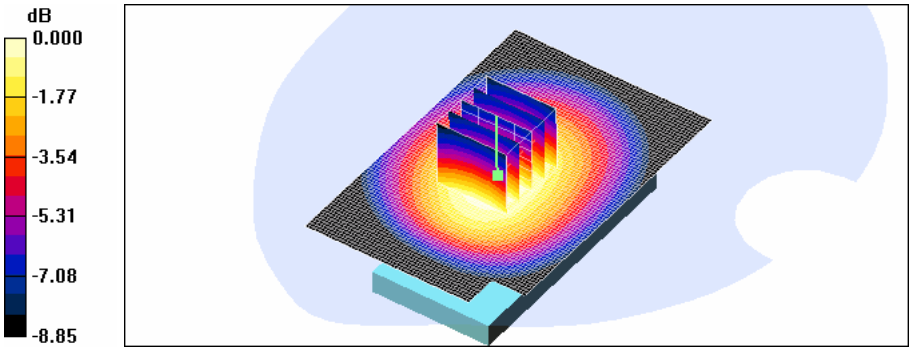

0 dB = 0.378mW/g

Test Laboratory:	HCT CO., LTD
EUT Type:	Cellular/PCS GSM/EDGE Phone with Bluetooth & WLAN
	GPRS Class 10 and GPRS mode class B(GPRS and GSM, but not simultaneously)
Liquid Temperature:	21.2 ℃
Ambient Temperature:	21.4 ℃
Test Date:	Aug.21, 2010

DUT: KM553; Type: Bar; Serial: #1

Communication System: GSM 850; Frequency: 836.6 MHz;Duty Cycle: 1:4.15
Medium parameters used (interpolated): f = 836.6 MHz; σ = 0.983 mho/m; ε_r = 56.9; ρ = 1000 kg/m^3
Phantom section: Flat Section ; Measurement SW: DASY4, V4.7 Build 80; Postprocessing SW: SEMCAD, V1.8 Build 176

DASY4 Configuration:
- Probe: ES3DV3 - SN3161; ConvF(5.84, 5.84, 5.84); Calibrated: 2010-03-22
- Sensor-Surface: 4mm (Mechanical Surface Detection)
- Electronics: DAE4 Sn869; Calibrated: 2009-09-18
- Phantom: 835/900 Phamtom ; Type: SAM

Body 190/Area Scan (61x91x1): Measurement grid: dx=15mm, dy=15mm

Info: Interpolated medium parameters used for SAR evaluation.
Maximum value of SAR (interpolated) = 0.519 mW/g

Body 190/Zoom Scan (5x5x7)/Cube 0: Measurement grid: dx=8mm, dy=8mm, dz=5mm
Reference Value = 12.0 V/m; Power Drift = -0.059 dB
Peak SAR (extrapolated) = 0.638 W/kg
SAR(1 g) = 0.496 mW/g; SAR(10 g) = 0.364 mW/g

Info: Interpolated medium parameters used for SAR evaluation.
Maximum value of SAR (measured) = 0.526 mW/g

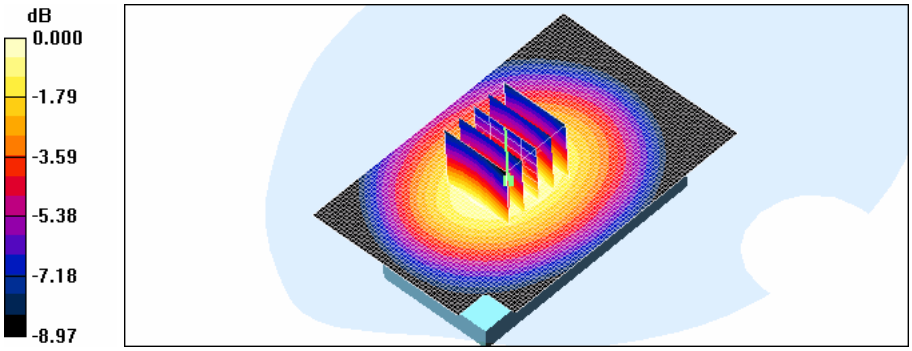

0 dB = 0.526mW/g

Test Laboratory:	HCT CO., LTD
EUT Type:	Cellular/PCS GSM/EDGE Phone with Bluetooth & WLAN
	GPRS Class 10 and GPRS mode class B(GPRS and GSM, but not simultaneously)
Liquid Temperature:	21.1 ℃
Ambient Temperature:	21.3 ℃
Test Date:	Aug.22, 2010

DUT: KM553; Type: Bar; Serial: #1

Communication System: GSM 1900; Frequency: 1880 MHz;Duty Cycle: 1:8.3
Medium parameters used: f = 1880 MHz; σ = 1.48 mho/m; ε_r = 53.7; ρ = 1000 kg/m^3
Phantom section: Flat Section ; Measurement SW: DASY4, V4.7 Build 80; Postprocessing SW: SEMCAD, V1.8 Build 176

DASY4 Configuration:
- Probe: ES3DV3 - SN3161; ConvF(4.52, 4.52, 4.52); Calibrated: 2010-03-22
- Sensor-Surface: 4mm (Mechanical Surface Detection)
- Electronics: DAE4 Sn869; Calibrated: 2009-09-18
- Phantom: 1800/1900 Phantom; Type: SAM

Body 661/Area Scan (61x91x1): Measurement grid: dx=15mm, dy=15mm
Maximum value of SAR (interpolated) = 0.373 mW/g

Body 661/Zoom Scan (5x5x7)/Cube 0: Measurement grid: dx=8mm, dy=8mm, dz=5mm
Reference Value = 13.6 V/m; Power Drift = -0.008 dB
Peak SAR (extrapolated) = 0.543 W/kg
SAR(1 g) = 0.334 mW/g; SAR(10 g) = 0.195 mW/g
Maximum value of SAR (measured) = 0.363 mW/g

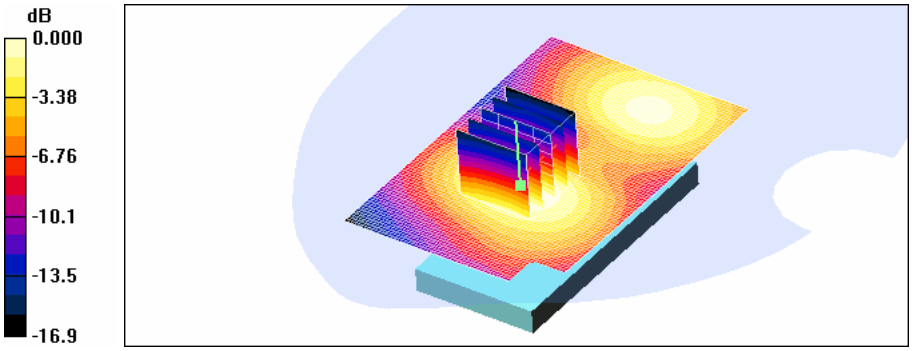

0 dB = 0.363mW/g

Test Laboratory:	HCT CO., LTD
EUT Type:	Cellular/PCS GSM/EDGE Phone with Bluetooth & WLAN
	GPRS Class 10 and GPRS mode class B(GPRS and GSM, but not simultaneously)
Liquid Temperature:	21.1 ℃
Ambient Temperature:	21.3 ℃
Test Date:	Aug.22, 2010

DUT: KM553; Type: Bar; Serial: #1

Communication System: GSM 1900; Frequency: 1880 MHz;Duty Cycle: 1:4.15
Medium parameters used: f = 1880 MHz; σ = 1.48 mho/m; ε_r = 53.7; ρ = 1000 kg/m^3
Phantom section: Flat Section ; Measurement SW: DASY4, V4.7 Build 80; Postprocessing SW: SEMCAD, V1.8 Build 176

DASY4 Configuration:
- Probe: ES3DV3 - SN3161; ConvF(4.52, 4.52, 4.52); Calibrated: 2010-03-22
- Sensor-Surface: 4mm (Mechanical Surface Detection)
- Electronics: DAE4 Sn869; Calibrated: 2009-09-18
- Phantom: 1800/1900 Phantom; Type: SAM

Body 661/Area Scan (61x91x1): Measurement grid: dx=15mm, dy=15mm
Maximum value of SAR (interpolated) = 0.518 mW/g

Body 661/Zoom Scan (5x5x7)/Cube 0: Measurement grid: dx=8mm, dy=8mm, dz=5mm
Reference Value = 15.7 V/m; Power Drift = -0.032 dB
Peak SAR (extrapolated) = 0.757 W/kg
SAR(1 g) = 0.467 mW/g; SAR(10 g) = 0.272 mW/g
Maximum value of SAR (measured) = 0.507 mW/g

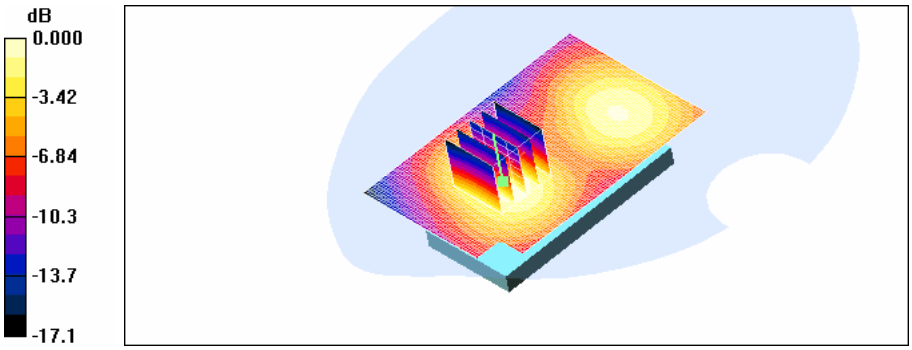

0 dB = 0.507mW/g

Test Laboratory:	HCT CO., LTD
EUT Type:	Cellular/PCS GSM/EDGE Phone with Bluetooth & WLAN
	GPRS Class 10 and GPRS mode class B(GPRS and GSM, but not simultaneously)
Liquid Temperature:	21.1 ℃
Ambient Temperature:	21.3 ℃
Test Date:	Aug.22, 2010

DUT: KM553; Type: Bar; Serial: #1

Communication System: GSM 1900; Frequency: 1880 MHz;Duty Cycle: 1:8.3
Medium parameters used: f = 1880 MHz; σ = 1.48 mho/m; ε_r = 53.7; ρ = 1000 kg/m^3
Phantom section: Flat Section ; Measurement SW: DASY4, V4.7 Build 80; Postprocessing SW: SEMCAD, V1.8 Build 176

DASY4 Configuration:
- Probe: ES3DV3 - SN3161; ConvF(4.52, 4.52, 4.52); Calibrated: 2010-03-22
- Sensor-Surface: 4mm (Mechanical Surface Detection)
- Electronics: DAE4 Sn869; Calibrated: 2009-09-18
- Phantom: 1800/1900 Phantom; Type: SAM

Body 661/Area Scan (61x91x1): Measurement grid: dx=15mm, dy=15mm
Maximum value of SAR (interpolated) = 0.373 mW/g

Body 661/Zoom Scan (5x5x7)/Cube 0: Measurement grid: dx=8mm, dy=8mm, dz=5mm
Reference Value = 13.5 V/m; Power Drift = -0.011 dB
Peak SAR (extrapolated) = 0.542 W/kg
SAR(1 g) = 0.334 mW/g; SAR(10 g) = 0.195 mW/g
Maximum value of SAR (measured) = 0.364 mW/g

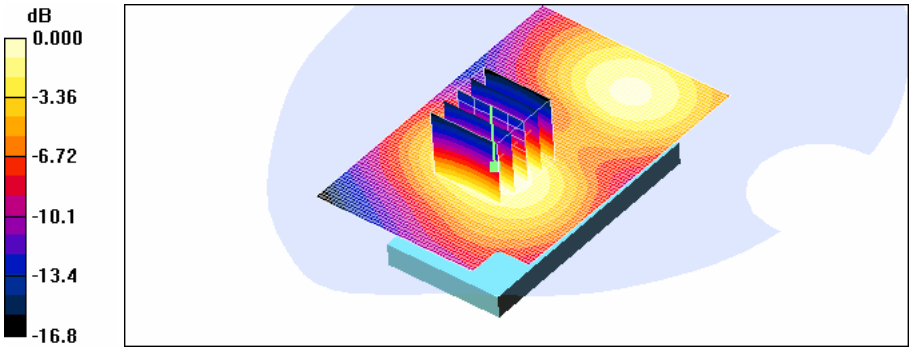

0 dB = 0.364mW/g

Test Laboratory:	HCT CO., LTD
EUT Type:	Cellular/PCS GSM/EDGE Phone with Bluetooth & WLAN
	GPRS Class 10 and GPRS mode class B(GPRS and GSM, but not simultaneously)
Liquid Temperature:	21.1 ℃
Ambient Temperature:	21.3 ℃
Test Date:	Aug.22, 2010

DUT: KM553; Type: Bar; Serial: #1

Communication System: GSM 1900; Frequency: 1880 MHz;Duty Cycle: 1:4.15
Medium parameters used: f = 1880 MHz; σ = 1.48 mho/m; ε_r = 53.7; ρ = 1000 kg/m^3
Phantom section: Flat Section ; Measurement SW: DASY4, V4.7 Build 80; Postprocessing SW: SEMCAD, V1.8 Build 176

DASY4 Configuration:
- Probe: ES3DV3 - SN3161; ConvF(4.52, 4.52, 4.52); Calibrated: 2010-03-22
- Sensor-Surface: 4mm (Mechanical Surface Detection)
- Electronics: DAE4 Sn869; Calibrated: 2009-09-18
- Phantom: 1800/1900 Phantom; Type: SAM

Body 661/Area Scan (61x91x1): Measurement grid: dx=15mm, dy=15mm
Maximum value of SAR (interpolated) = 0.378 mW/g

Body 661/Zoom Scan (5x5x7)/Cube 0: Measurement grid: dx=8mm, dy=8mm, dz=5mm
Reference Value = 14.4 V/m; Power Drift = -0.124 dB
Peak SAR (extrapolated) = 0.554 W/kg
SAR(1 g) = 0.346 mW/g; SAR(10 g) = 0.206 mW/g
Maximum value of SAR (measured) = 0.376 mW/g

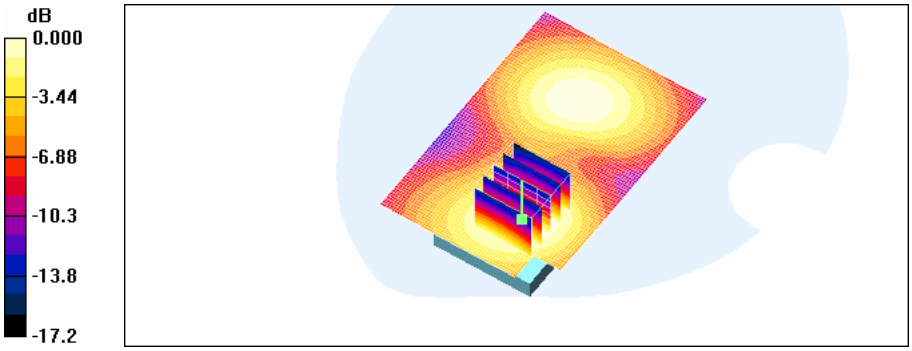

0 dB = 0.376mW/g

Test Laboratory:	HCT CO., LTD
EUT Type:	Cellular/PCS GSM/EDGE Phone with Bluetooth & WLAN
	GPRS Class 10 and GPRS mode class B(GPRS and GSM, but not simultaneously)
Liquid Temperature:	21.1 ℃
Ambient Temperature:	21.3 ℃
Test Date:	Aug.22, 2010

DUT: KM553; Type: Bar; Serial: #1

Communication System: 2450MHz FCC; Frequency: 2412 MHz;Duty Cycle: 1:1
Medium parameters used (interpolated): f = 2412 MHz; σ = 1.9 mho/m; ε_r = 51.9; ρ = 1000 kg/m^3
Phantom section: Flat Section ; Measurement SW: DASY4, V4.7 Build 80; Postprocessing SW: SEMCAD, V1.8 Build 176

DASY4 Configuration:
- Probe: ES3DV3 - SN3161; ConvF(4.17, 4.17, 4.17); Calibrated: 2010-03-22
- Sensor-Surface: 4mm (Mechanical Surface Detection)
- Electronics: DAE4 Sn869; Calibrated: 2009-09-18
- Phantom: 1800/1900 Phantom; Type: SAM

802.11b 1ch 1Mbps/Area Scan (61x91x1): Measurement grid: dx=15mm, dy=15mm

Info: Interpolated medium parameters used for SAR evaluation.
Maximum value of SAR (interpolated) = 0.056 mW/g

802.11b 1ch 1Mbps/Zoom Scan (5x5x7)/Cube 0: Measurement grid: dx=8mm, dy=8mm, dz=5mm
Reference Value = 3.31 V/m; Power Drift = 0.001 dB
Peak SAR (extrapolated) = 0.110 W/kg
SAR(1 g) = 0.052 mW/g; SAR(10 g) = 0.027 mW/g

Info: Interpolated medium parameters used for SAR evaluation.
Maximum value of SAR (measured) = 0.057 mW/g

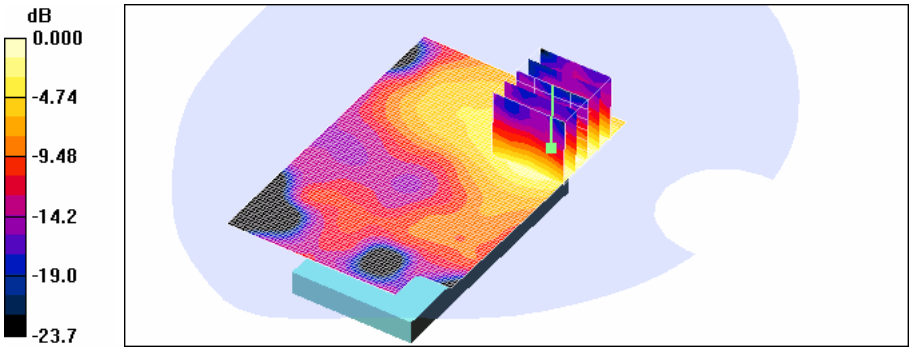

0 dB = 0.057mW/g

Test Laboratory:	HCT CO., LTD
EUT Type:	Cellular/PCS GSM/EDGE Phone with Bluetooth & WLAN
	GPRS Class 10 and GPRS mode class B(GPRS and GSM, but not simultaneously)
Liquid Temperature:	21.1 ℃
Ambient Temperature:	21.3 ℃
Test Date:	Aug.22, 2010

DUT: KM553; Type: Bar; Serial: #1

Communication System: 2450MHz FCC; Frequency: 2437 MHz;Duty Cycle: 1:1
Medium parameters used (interpolated): f = 2437 MHz; σ = 1.95 mho/m; ε_r = 51.7; ρ = 1000 kg/m^3
Phantom section: Flat Section ; Measurement SW: DASY4, V4.7 Build 80; Postprocessing SW: SEMCAD, V1.8 Build 176

DASY4 Configuration:
- Probe: ES3DV3 - SN3161; ConvF(4.17, 4.17, 4.17); Calibrated: 2010-03-22
- Sensor-Surface: 4mm (Mechanical Surface Detection)
- Electronics: DAE4 Sn869; Calibrated: 2009-09-18
- Phantom: 1800/1900 Phantom; Type: SAM

802.11b 6ch 1Mbps/Area Scan (61x91x1): Measurement grid: dx=15mm, dy=15mm

Info: Interpolated medium parameters used for SAR evaluation.
Maximum value of SAR (interpolated) = 0.065 mW/g

802.11b 6ch 1Mbps/Zoom Scan (5x5x7)/Cube 0: Measurement grid: dx=8mm, dy=8mm, dz=5mm
Reference Value = 3.81 V/m; Power Drift = -0.185 dB
Peak SAR (extrapolated) = 0.125 W/kg
SAR(1 g) = 0.061 mW/g; SAR(10 g) = 0.031 mW/g

Info: Interpolated medium parameters used for SAR evaluation.
Maximum value of SAR (measured) = 0.066 mW/g

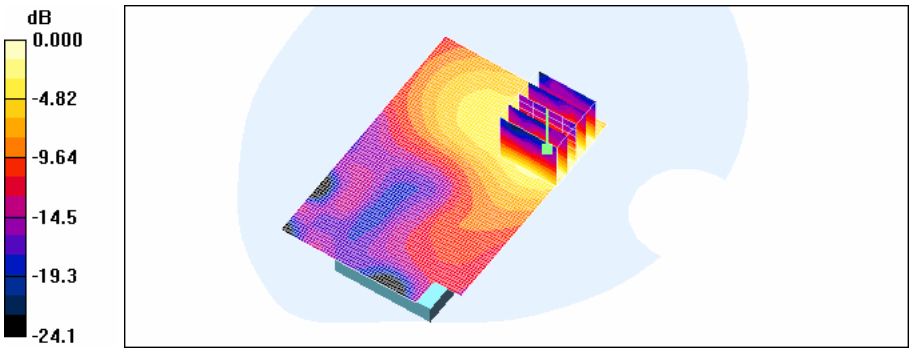

0 dB = 0.066mW/g

Test Laboratory:	HCT CO., LTD
EUT Type:	Cellular/PCS GSM/EDGE Phone with Bluetooth & WLAN
	GPRS Class 10 and GPRS mode class B(GPRS and GSM, but not simultaneously)
Liquid Temperature:	21.1 ℃
Ambient Temperature:	21.3 ℃
Test Date:	Aug.22, 2010

DUT: KM553; Type: Bar; Serial: #1

Communication System: 2450MHz FCC; Frequency: 2462 MHz;Duty Cycle: 1:1
Medium parameters used (interpolated): f = 2462 MHz; σ = 1.99 mho/m; ε_r = 51.6; ρ = 1000 kg/m^3
Phantom section: Flat Section ; Measurement SW: DASY4, V4.7 Build 80; Postprocessing SW: SEMCAD, V1.8 Build 176

DASY4 Configuration:
- Probe: ES3DV3 - SN3161; ConvF(4.17, 4.17, 4.17); Calibrated: 2010-03-22
- Sensor-Surface: 4mm (Mechanical Surface Detection)
- Electronics: DAE4 Sn869; Calibrated: 2009-09-18
- Phantom: 1800/1900 Phantom; Type: SAM

802.11b 11ch 1Mbps/Area Scan (61x91x1): Measurement grid: dx=15mm, dy=15mm

Info: Interpolated medium parameters used for SAR evaluation.
Maximum value of SAR (interpolated) = 0.075 mW/g

802.11b 11ch 1Mbps/Zoom Scan (5x5x7)/Cube 0: Measurement grid: dx=8mm, dy=8mm, dz=5mm
Reference Value = 4.16 V/m; Power Drift = 0.022 dB
Peak SAR (extrapolated) = 0.148 W/kg
SAR(1 g) = 0.069 mW/g; SAR(10 g) = 0.035 mW/g

Info: Interpolated medium parameters used for SAR evaluation.
Maximum value of SAR (measured) = 0.075 mW/g

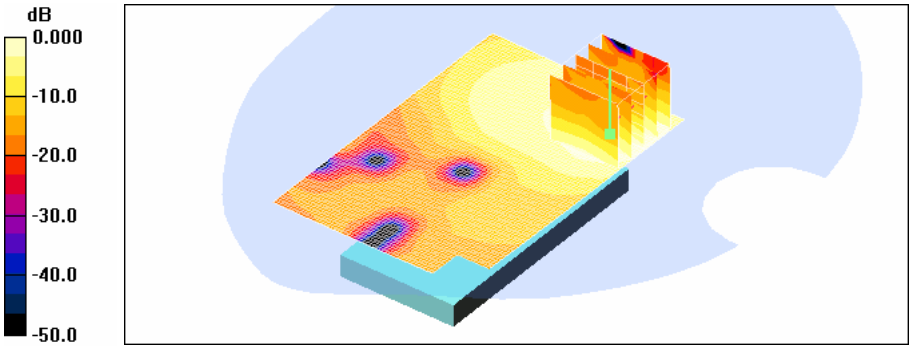

0 dB = 0.075mW/g

Test Laboratory:	HCT CO., LTD
EUT Type:	Cellular/PCS GSM/EDGE Phone with Bluetooth & WLAN
	GPRS Class 10 and GPRS mode class B(GPRS and GSM, but not simultaneously)
Liquid Temperature:	21.1 ℃
Ambient Temperature:	21.3 ℃
Test Date:	Aug.22, 2010

DUT: KM553; Type: Bar; Serial: #1

Communication System: 2450MHz FCC; Frequency: 2462 MHz;Duty Cycle: 1:1
Medium parameters used (interpolated): f = 2462 MHz; σ = 1.99 mho/m; ε_r = 51.6; ρ = 1000 kg/m^3
Phantom section: Flat Section ; Measurement SW: DASY4, V4.7 Build 80; Postprocessing SW: SEMCAD, V1.8 Build 176

DASY4 Configuration:
- Probe: ES3DV3 - SN3161; ConvF(4.17, 4.17, 4.17); Calibrated: 2010-03-22
- Sensor-Surface: 4mm (Mechanical Surface Detection)
- Electronics: DAE4 Sn869; Calibrated: 2009-09-18
- Phantom: 1800/1900 Phantom; Type: SAM

802.11b 11ch 1Mbps/Area Scan (61x91x1): Measurement grid: dx=15mm, dy=15mm

Info: Interpolated medium parameters used for SAR evaluation.
Maximum value of SAR (interpolated) = 0.018 mW/g

802.11b 11ch 1Mbps/Zoom Scan (5x5x7)/Cube 0: Measurement grid: dx=8mm, dy=8mm, dz=5mm
Reference Value = 3.07 V/m; Power Drift = -0.001 dB
Peak SAR (extrapolated) = 0.045 W/kg
SAR(1 g) = 0.016 mW/g; SAR(10 g) = 0.00797 mW/g

Info: Interpolated medium parameters used for SAR evaluation.
Maximum value of SAR (measured) = 0.018 mW/g

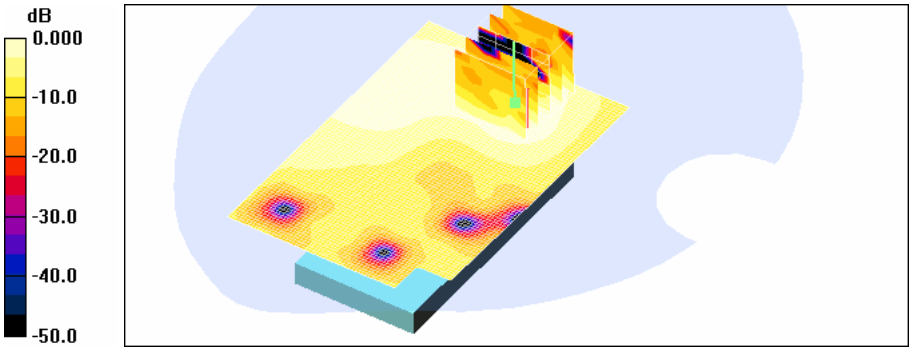

0 dB = 0.018mW/g

Test Laboratory:	HCT CO., LTD
EUT Type:	Cellular/PCS GSM/EDGE Phone with Bluetooth & WLAN
	GPRS Class 10 and GPRS mode class B(GPRS and GSM, but not simultaneously)
Liquid Temperature:	21.2 ℃
Ambient Temperature:	21.4 ℃
Test Date:	Aug.21, 2010

DUT: KM553; Type: Bar; Serial: #1

Communication System: GSM 850; Frequency: 824.2 MHz;Duty Cycle: 1:8.3
Medium parameters used: f = 825 MHz; σ = 0.881 mho/m; ε_r = 42.1; ρ = 1000 kg/m^3
Phantom section: Left Section ; Measurement SW: DASY4, V4.7 Build 80; Postprocessing SW: SEMCAD, V1.8 Build 176

DASY4 Configuration:
- Probe: ES3DV3 - SN3161; ConvF(5.96, 5.96, 5.96); Calibrated: 2010-03-22
- Sensor-Surface: 4mm (Mechanical Surface Detection)
- Electronics: DAE4 Sn869; Calibrated: 2009-09-18
- Phantom: 835/900 Phamtom ; Type: SAM

Left touch 128/Area Scan (51x91x1): Measurement grid: dx=15mm, dy=15mm
Maximum value of SAR (interpolated) = 1.05 mW/g

Left touch 128/Zoom Scan (5x5x7)/Cube 0: Measurement grid: dx=8mm, dy=8mm, dz=5mm
Reference Value = 9.40 V/m; Power Drift = -0.016 dB
Peak SAR (extrapolated) = 1.38 W/kg
SAR(1 g) = 1.04 mW/g; SAR(10 g) = 0.717 mW/g
Maximum value of SAR (measured) = 1.08 mW/g

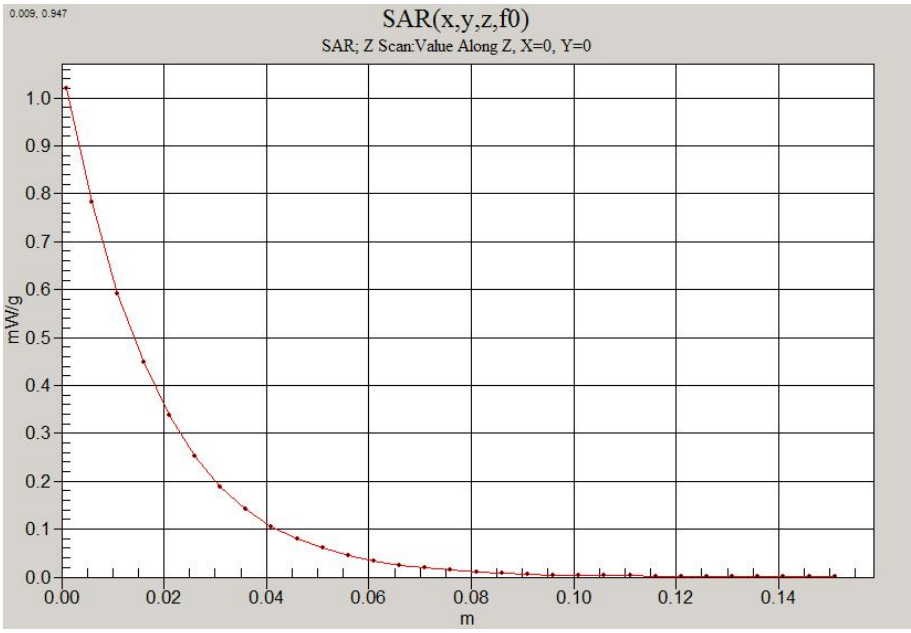

Test Laboratory:	HCT CO., LTD
EUT Type:	Cellular/PCS GSM/EDGE Phone with Bluetooth & WLAN
	GPRS Class 10 and GPRS mode class B(GPRS and GSM, but not simultaneously)
Liquid Temperature:	21.2 ℃
Ambient Temperature:	21.4 ℃
Test Date:	Aug.21, 2010

DUT: KM553; Type: Bar; Serial: #1

Communication System: GSM 850; Frequency: 836.6 MHz;Duty Cycle: 1:4.15
Medium parameters used (interpolated): f = 836.6 MHz; σ = 0.983 mho/m; ε_r = 56.9; ρ = 1000 kg/m^3
Phantom section: Flat Section ; Measurement SW: DASY4, V4.7 Build 80; Postprocessing SW: SEMCAD, V1.8 Build 176

DASY4 Configuration:
- Probe: ES3DV3 - SN3161; ConvF(5.84, 5.84, 5.84); Calibrated: 2010-03-22
- Sensor-Surface: 4mm (Mechanical Surface Detection)
- Electronics: DAE4 Sn869; Calibrated: 2009-09-18
- Phantom: 835/900 Phamtom ; Type: SAM

Body 190/Area Scan (61x91x1): Measurement grid: dx=15mm, dy=15mm

Info: Interpolated medium parameters used for SAR evaluation.
Maximum value of SAR (interpolated) = 0.629 mW/g

Body 190/Zoom Scan (5x5x7)/Cube 0: Measurement grid: dx=8mm, dy=8mm, dz=5mm
Reference Value = 14.0 V/m; Power Drift = -0.083 dB
Peak SAR (extrapolated) = 0.776 W/kg
SAR(1 g) = 0.598 mW/g; SAR(10 g) = 0.437 mW/g

Info: Interpolated medium parameters used for SAR evaluation.
Maximum value of SAR (measured) = 0.632 mW/g

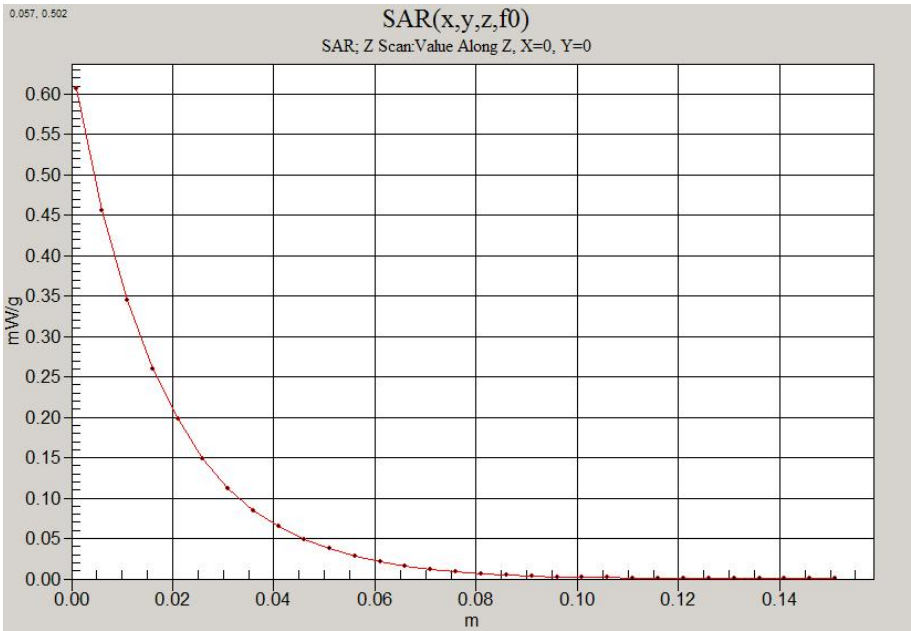

Test Laboratory:	HCT CO., LTD
EUT Type:	Cellular/PCS GSM/EDGE Phone with Bluetooth & WLAN
	GPRS Class 10 and GPRS mode class B(GPRS and GSM, but not simultaneously)
Liquid Temperature:	21.1 ℃
Ambient Temperature:	21.3 ℃
Test Date:	Aug.22, 2010

DUT: KM553; Type: Bar; Serial: #1

Communication System: GSM 1900; Frequency: 1880 MHz;Duty Cycle: 1:8.3
Medium parameters used: f = 1880 MHz; σ = 1.38 mho/m; ε_r = 40.9; ρ = 1000 kg/m^3
Phantom section: Right Section ; Measurement SW: DASY4, V4.7 Build 80; Postprocessing SW: SEMCAD, V1.8 Build 176

DASY4 Configuration:
- Probe: ES3DV3 - SN3161; ConvF(4.79, 4.79, 4.79); Calibrated: 2010-03-22
- Sensor-Surface: 4mm (Mechanical Surface Detection)
- Electronics: DAE4 Sn869; Calibrated: 2009-09-18
- Phantom: 1800/1900 Phantom; Type: SAM

Right tilt 661/Area Scan (51x91x1): Measurement grid: dx=15mm, dy=15mm
Maximum value of SAR (interpolated) = 0.874 mW/g

Right tilt 661/Zoom Scan (5x5x7)/Cube 0: Measurement grid: dx=8mm, dy=8mm, dz=5mm
Reference Value = 12.7 V/m; Power Drift = -0.084 dB
Peak SAR (extrapolated) = 1.14 W/kg
SAR(1 g) = 0.713 mW/g; SAR(10 g) = 0.416 mW/g
Maximum value of SAR (measured) = 0.774 mW/g

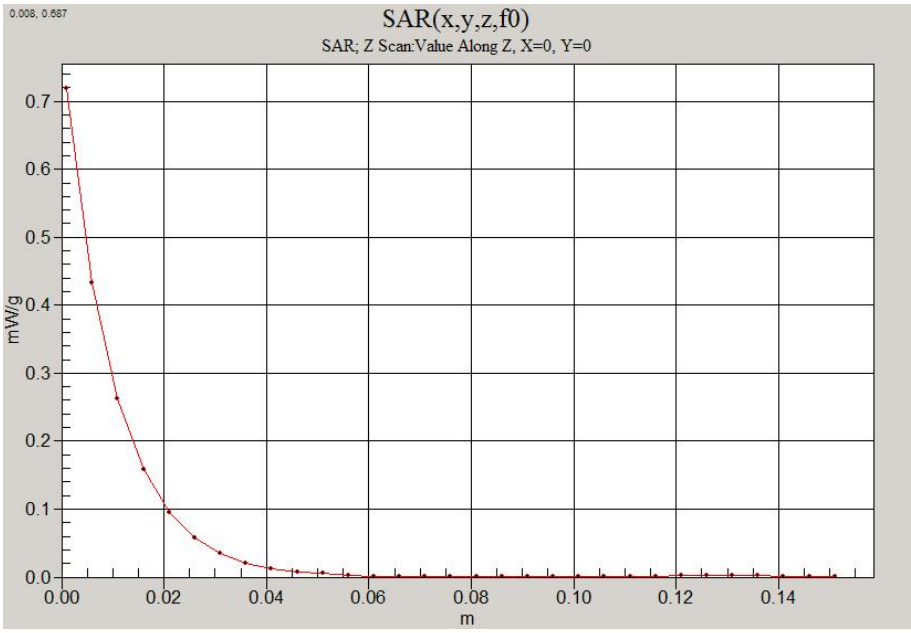

Test Laboratory:	HCT CO., LTD
EUT Type:	Cellular/PCS GSM/EDGE Phone with Bluetooth & WLAN
	GPRS Class 10 and GPRS mode class B(GPRS and GSM, but not simultaneously)
Liquid Temperature:	21.1 ℃
Ambient Temperature:	21.3 ℃
Test Date:	Aug.22, 2010

DUT: KM553; Type: Bar; Serial: #1

Communication System: GSM 1900; Frequency: 1880 MHz;Duty Cycle: 1:4.15
Medium parameters used: f = 1880 MHz; σ = 1.48 mho/m; ε_r = 53.7; ρ = 1000 kg/m^3
Phantom section: Flat Section ; Measurement SW: DASY4, V4.7 Build 80; Postprocessing SW: SEMCAD, V1.8 Build 176

DASY4 Configuration:
- Probe: ES3DV3 - SN3161; ConvF(4.52, 4.52, 4.52); Calibrated: 2010-03-22
- Sensor-Surface: 4mm (Mechanical Surface Detection)
- Electronics: DAE4 Sn869; Calibrated: 2009-09-18
- Phantom: 1800/1900 Phantom; Type: SAM

Body 661/Area Scan (61x91x1): Measurement grid: dx=15mm, dy=15mm
Maximum value of SAR (interpolated) = 0.518 mW/g

Body 661/Zoom Scan (5x5x7)/Cube 0: Measurement grid: dx=8mm, dy=8mm, dz=5mm
Reference Value = 15.7 V/m; Power Drift = -0.032 dB
Peak SAR (extrapolated) = 0.757 W/kg
SAR(1 g) = 0.467 mW/g; SAR(10 g) = 0.272 mW/g
Maximum value of SAR (measured) = 0.507 mW/g

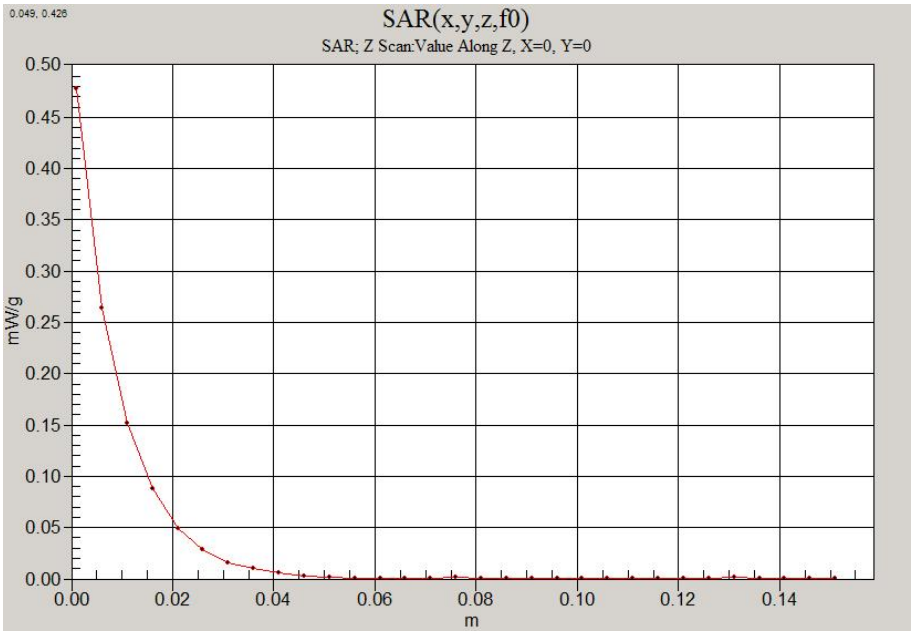

Attachment 2. – Dipole Validation Plots

■ Validation Data (835 MHz Head)

Test Laboratory: HCT CO., LTD

Input Power 100 mW (20 dBm)

Liquid Temp: 21.2 ℃

Test Date: Aug.21, 2010

DUT: Dipole 835 MHz; Type: D835V2; Serial: D835V2 - SN:441

Communication System: CW; Frequency: 835 MHz;Duty Cycle: 1:1
Medium parameters used: f = 835 MHz; σ = 0.888 mho/m; ε_r = 42.1; ρ = 1000 kg/m^3
Phantom section: Flat Section ; Measurement SW: DASY4, V4.7 Build 71; Postprocessing SW: SEMCAD, V1.8 Build 176

DASY4 Configuration:
- Probe: ES3DV3 - SN3161; ConvF(5.96, 5.96, 5.96); Calibrated: 2010-03-22
- Sensor-Surface: 4mm (Mechanical Surface Detection)
- Electronics: DAE4 Sn869; Calibrated: 2009-09-18
- Phantom: SAM 835/900 MHz; Type: SAM

Validation 835 MHz/Area Scan (61x81x1): Measurement grid: dx=15mm, dy=15mm
Maximum value of SAR (interpolated) = 1.06 mW/g

Validation 835 MHz/Zoom Scan (5x5x7)/Cube 0: Measurement grid: dx=8mm, dy=8mm, dz=5mm
Reference Value = 34.8 V/m; Power Drift = -0.020 dB
Peak SAR (extrapolated) = 1.42 W/kg
SAR(1 g) = 0.975 mW/g; SAR(10 g) = 0.651 mW/g
Maximum value of SAR (measured) = 1.05 mW/g

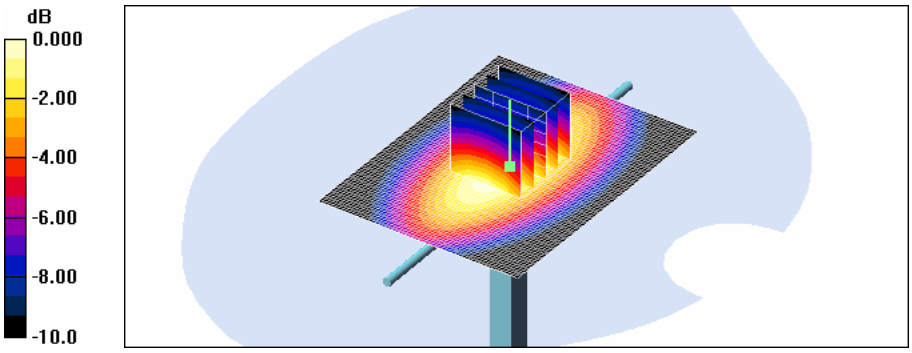

0 dB = 1.05mW/g

■ Validation Data (1900 MHz Head)

Test Laboratory: HCT CO., LTD

Input Power 100 mW (20 dBm)

Liquid Temp: 21.1 ℃

Test Date: Aug.22, 2010

DUT: Dipole 1900 MHz; Type: D1900V2; Serial: D1900V2 - SN:5d032

Communication System: CW; Frequency: 1900 MHz;Duty Cycle: 1:1
Medium parameters used: f = 1900 MHz; σ = 1.4 mho/m; ε_r = 40.8; ρ = 1000 kg/m^3
Phantom section: Flat Section ; Measurement SW: DASY4, V4.7 Build 71; Postprocessing SW: SEMCAD, V1.8 Build 176

DASY4 Configuration:
- Probe: ES3DV3 - SN3161; ConvF(4.79, 4.79, 4.79); Calibrated: 2010-03-22
- Sensor-Surface: 4mm (Mechanical Surface Detection)
- Electronics: DAE4 Sn869; Calibrated: 2009-09-18
- Phantom: SAM 1800/1900 MHz; Type: SAM

Dipole 1900MHz Validation/Area Scan (61x61x1): Measurement grid: dx=15mm, dy=15mm
Maximum value of SAR (interpolated) = 4.53 mW/g

Dipole 1900MHz Validation/Zoom Scan (5x5x7)/Cube 0: Measurement grid: dx=8mm, dy=8mm, dz=5mm
Reference Value = 56.5 V/m; Power Drift = 0.014 dB
Peak SAR (extrapolated) = 7.74 W/kg
SAR(1 g) = 3.92 mW/g; SAR(10 g) = 1.95 mW/g
Maximum value of SAR (measured) = 4.32 mW/g

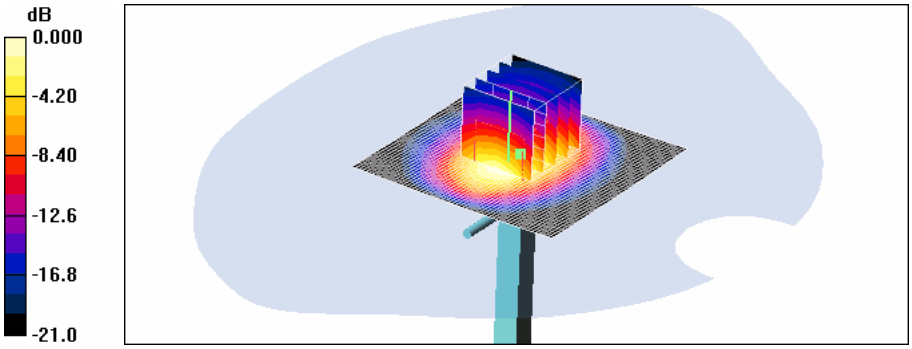

0 dB = 4.32mW/g

■ Validation Data (2450 MHz Body)

Test Laboratory: HCT CO., LTD

Input Power 100 mW (20 dBm)

Liquid Temp: 21.1 ℃

Test Date: Aug.22, 2010

DUT: Dipole 2450 MHz; Type: D2450V2; Serial: D2450V2 - SN:768

Communication System: CW; Frequency: 2450 MHz;Duty Cycle: 1:1
Medium parameters used: f = 2450 MHz; σ = 1.96 mho/m; ε_r = 51.7; ρ = 1000 kg/m^3
Phantom section: Flat Section ; Measurement SW: DASY4, V4.7 Build 71; Postprocessing SW: SEMCAD, V1.8 Build 176

DASY4 Configuration:
- Probe: ES3DV3 - SN3161; ConvF(4.17, 4.17, 4.17); Calibrated: 2010-03-22
- Sensor-Surface: 4mm (Mechanical Surface Detection)
- Electronics: DAE4 Sn869; Calibrated: 2009-09-18
- Phantom: 1800/1900 Phantom; Type: SAM

Validation 2450MHz/Area Scan (61x61x1): Measurement grid: dx=15mm, dy=15mm
Maximum value of SAR (interpolated) = 6.58 mW/g

Validation 2450MHz/Zoom Scan (5x5x7)/Cube 0: Measurement grid: dx=8mm, dy=8mm, dz=5mm
Reference Value = 48.6 V/m; Power Drift = -0.125 dB
Peak SAR (extrapolated) = 11.9 W/kg
SAR(1 g) = 5.26 mW/g; SAR(10 g) = 2.35 mW/g
Maximum value of SAR (measured) = 5.79 mW/g

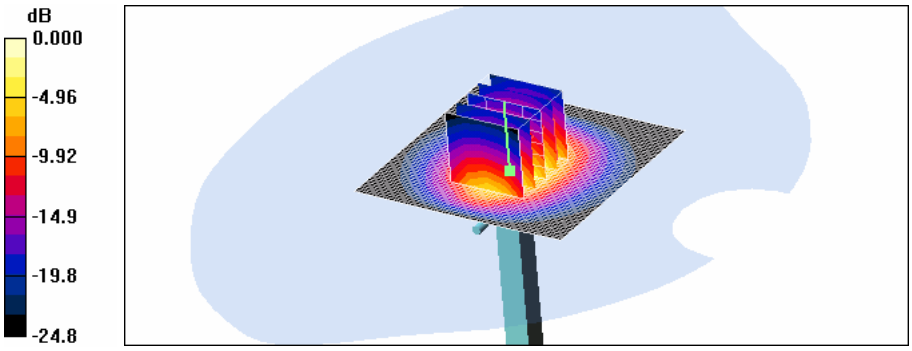

0 dB = 5.79mW/g

■ Validation Data (2450 MHz Body)

Test Laboratory: HCT CO., LTD

Input Power 100 mW (20 dBm)

Liquid Temp: 21.1 ℃

Test Date: Aug.22, 2010

DUT: Dipole 2450 MHz; Type: D2450V2; Serial: D2450V2 - SN:768

Communication System: CW; Frequency: 2450 MHz;Duty Cycle: 1:1
Medium parameters used: f = 2450 MHz; σ = 1.96 mho/m; ε_r = 51.7; ρ = 1000 kg/m^3
Phantom section: Flat Section ; Measurement SW: DASY4, V4.7 Build 71; Postprocessing SW: SEMCAD, V1.8 Build 176

DASY4 Configuration:
- Probe: ES3DV3 - SN3161; ConvF(4.17, 4.17, 4.17); Calibrated: 2010-03-22
- Sensor-Surface: 4mm (Mechanical Surface Detection)
- Electronics: DAE4 Sn869; Calibrated: 2009-09-18
- Phantom: 1800/1900 Phantom; Type: SAM

Validation 2450MHz/Area Scan (61x61x1): Measurement grid: dx=15mm, dy=15mm
Maximum value of SAR (interpolated) = 6.58 mW/g

Validation 2450MHz/Zoom Scan (5x5x7)/Cube 0: Measurement grid: dx=8mm, dy=8mm, dz=5mm
Reference Value = 48.6 V/m; Power Drift = -0.125 dB
Peak SAR (extrapolated) = 11.9 W/kg
SAR(1 g) = 5.26 mW/g; SAR(10 g) = 2.35 mW/g
Maximum value of SAR (measured) = 5.79 mW/g

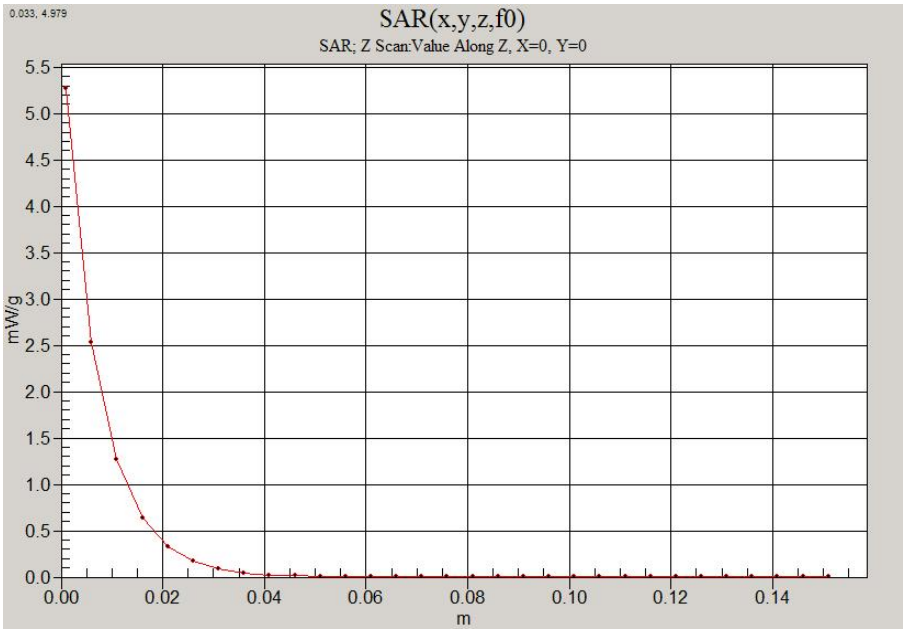

■ Dielectric Parameter (835 MHz Head)

Title	KM553
SubTitle	GSM850(Head)
Test Date	Aug.21, 2010

Frequency	e'	e''
800000000	42.4645	19.2219
805000000	42.3873	19.1913
810000000	42.3091	19.1723
815000000	42.2553	19.1791
820000000	42.2572	19.1330
825000000	42.1485	19.2033
830000000	42.1258	19.1592
835000000	42.0522	19.1193
840000000	42.0335	19.0854
845000000	41.9782	19.0674
850000000	41.9225	19.0809
855000000	41.8656	19.0690
860000000	41.7962	19.0815
865000000	41.7729	19.0552
870000000	41.6820	19.0742
875000000	41.6080	19.0429
880000000	41.5502	19.0628
885000000	41.5404	19.0382
890000000	41.4655	19.0283
895000000	41.3810	19.0165
900000000	41.3146	18.9948

■ Dielectric Parameter (835 MHz Body)

Title	KM553
SubTitle	GSM850(Body)
Test Date	Aug.21, 2010

Frequency	e'	e''
800000000	57.0694	21.3548
805000000	57.0083	21.3224
810000000	57.0255	21.3128
815000000	57.0137	21.2222
820000000	56.9955	21.2363
825000000	56.9435	21.2278
830000000	56.9123	21.1717
835000000	56.9152	21.1425
840000000	56.8621	21.1084
845000000	56.7476	21.0912
850000000	56.7590	20.9994
855000000	56.6297	21.0059
860000000	56.6133	20.9175
865000000	56.5424	20.9501
870000000	56.4335	20.8983
875000000	56.3844	20.8175
880000000	56.3335	20.8002
885000000	56.2354	20.7978
890000000	56.2043	20.8094
895000000	56.1383	20.7892
900000000	56.0980	20.7805

■ Dielectric Parameter (1900 MHz Head)

Title	KM553
SubTitle	GSM1900(Head)
Test Date	Aug.22, 2010

Frequency	e'	e''
1800000000	41.2055	12.9783
1810000000	41.1747	13.0145
1820000000	41.1580	13.0753
1830000000	41.1481	13.1253
1840000000	41.1257	13.1680
1850000000	41.0838	13.2018
1860000000	41.0213	13.1882
1870000000	40.9630	13.2393
1880000000	40.9013	13.2048
1890000000	40.8452	13.2368
1900000000	40.7539	13.2410
1910000000	40.7173	13.2486
1920000000	40.6913	13.2613
1930000000	40.6710	13.3032
1940000000	40.6364	13.3308
1950000000	40.6227	13.3830
1960000000	40.6599	13.3942
1970000000	40.6635	13.4461
1980000000	40.6413	13.4589
1990000000	40.5983	13.5130
2000000000	40.5251	13.5557

■ Dielectric Parameter (1900 MHz Body)

Title KM553
SubTitle GSM1900(Body)
Test Date Aug.22, 2010

Frequency	e'	e''
1850000000	53.7881	14.0579
1855000000	53.7852	14.0651
1860000000	53.7916	14.1000
1865000000	53.7533	14.1322
1870000000	53.7552	14.1083
1875000000	53.7206	14.1527
1880000000	53.6900	14.1747
1885000000	53.6793	14.1793
1890000000	53.6138	14.2184
1895000000	53.5913	14.2252
1900000000	53.5665	14.2195
1905000000	53.5314	14.2470
1910000000	53.4997	14.2737
1915000000	53.4448	14.3119
1920000000	53.4449	14.3446
1925000000	53.4541	14.3424
1930000000	53.4040	14.3877
1935000000	53.4267	14.3985
1940000000	53.4116	14.4063
1945000000	53.3896	14.4678
1950000000	53.4259	14.4536

■ Dielectric Parameter (2450 MHz Body)

Title	KM553
SubTitle	2450 MHz(Head)
Test Date	Aug.22, 2010

Frequency	e'	e''
2400000000.0000	51.9399	14.1176
2405000000.0000	51.9207	14.1412
2410000000.0000	51.8802	14.1654
2415000000.0000	51.8261	14.1843
2420000000.0000	51.8044	14.2228
2425000000.0000	51.7524	14.2547
2430000000.0000	51.7243	14.2756
2435000000.0000	51.7155	14.3322
2440000000.0000	51.6983	14.3848
2445000000.0000	51.6462	14.3916
2450000000.0000	51.6650	14.4066
2455000000.0000	51.6592	14.4493
2460000000.0000	51.6201	14.4891
2465000000.0000	51.6344	14.5025
2470000000.0000	51.6106	14.5536
2475000000.0000	51.5864	14.5451
2480000000.0000	51.6176	14.6089
2485000000.0000	51.5712	14.6179
2490000000.0000	51.5856	14.6355
2495000000.0000	51.5708	14.6420
2500000000.0000	51.5580	14.6497

Attachment 3. – Probe Calibration Data

Calibration Laboratory of
Schmid & Partner
Engineering AG
Zeughausstrasse 43, 8004 Zurich, Switzerland

S Schweizerischer Kalibrierdienst
C Service suisse d'étalonnage
Servizio svizzero di taratura
S Swiss Calibration Service

Accredited by the Swiss Accreditation Service (SAS)
The Swiss Accreditation Service is one of the signatories to the EA Multilateral Agreement for the recognition of calibration certificates

Accreditation No.: SCS 108

Client **HCT (Dymstec)** **Certificate No: ES3-3161_Mar10**

CALIBRATION CERTIFICATE

Object	ES3DV3 - SN:3161
Calibration procedure(s)	QA CAL-01.v6, QA CAL-12.v6, QA CAL-23.v3 and QA CAL-25.v2 Calibration procedure for dosimetric E-field probes
Calibration date:	March 22, 2010

This calibration certificate documents the traceability to national standards, which realize the physical units of measurements (SI).
The measurements and the uncertainties with confidence probability are given on the following pages and are part of the certificate.

All calibrations have been conducted in the closed laboratory facility: environment temperature (22 ± 3)°C and humidity < 70%.

Calibration Equipment used (M&TE critical for calibration)

Primary Standards	ID #	Cal Date (Certificate No.)	Scheduled Calibration
Power meter E4419B	GB41293874	1-Apr-09 (No. 217-01030)	Apr-10
Power sensor E4412A	MY41495277	1-Apr-09 (No. 217-01030)	Apr-10
Power sensor E4412A	MY41498087	1-Apr-09 (No. 217-01030)	Apr-10
Reference 3 dB Attenuator	SN: S5054 (3c)	31-Mar-09 (No. 217-01026)	Mar-10
Reference 20 dB Attenuator	SN: S5086 (20b)	31-Mar-09 (No. 217-01028)	Mar-10
Reference 30 dB Attenuator	SN: S5129 (30b)	31-Mar-09 (No. 217-01027)	Mar-10
Reference Probe ES3DV2	SN: 3013	30-Dec-09 (No. ES3-3013_Dec09)	Dec-10
DAE4	SN: 660	29-Sep-09 (No. DAE4-660_Sep09)	Sep-10

Secondary Standards	ID #	Check Date (in house)	Scheduled Check
RF generator HP 8648C	US3642U01700	4-Aug-99 (in house check Oct-09)	In house check: Oct-11
Network Analyzer HP 8753E	US37390585	18-Oct-01 (in house check Oct-09)	In house check: Oct10

	Name	Function	Signature
Calibrated by:	Jeton Kastrati	Laboratory Technician	
Approved by:	Katja Pokovic	Technical Manager	

Issued: March 25, 2010

This calibration certificate shall not be reproduced except in full without written approval of the laboratory.

Certificate No: ES3-3161_Mar10 Page 1 of 11

Calibration Laboratory of
Schmid & Partner
Engineering AG
Zeughausstrasse 43, 8004 Zurich, Switzerland

S Schweizerischer Kalibrierdienst
C Service suisse d'étalonnage
Servizio svizzero di taratura
S Swiss Calibration Service

Accredited by the Swiss Accreditation Service (SAS)
The Swiss Accreditation Service is one of the signatories to the EA Multilateral Agreement for the recognition of calibration certificates

Accreditation No.: **SCS 108**

Glossary:

TSL	tissue simulating liquid
NORMx,y,z	sensitivity in free space
ConvF	sensitivity in TSL / NORMx,y,z
DCP	diode compression point
CF	crest factor (1/duty_cycle) of the RF signal
A, B, C	modulation dependent linearization parameters
Polarization φ	φ rotation around probe axis
Polarization ϑ	ϑ rotation around an axis that is in the plane normal to probe axis (at measurement center), i.e., ϑ = 0 is normal to probe axis

Calibration is Performed According to the Following Standards:

a) IEEE Std 1528-2003, "IEEE Recommended Practice for Determining the Peak Spatial-Averaged Specific Absorption Rate (SAR) in the Human Head from Wireless Communications Devices: Measurement Techniques", December 2003
b) IEC 62209-1, "Procedure to measure the Specific Absorption Rate (SAR) for hand-held devices used in close proximity to the ear (frequency range of 300 MHz to 3 GHz)", February 2005

Methods Applied and Interpretation of Parameters:

- *NORMx,y,z:* Assessed for E-field polarization ϑ = 0 (f ≤ 900 MHz in TEM-cell; f > 1800 MHz: R22 waveguide). NORMx,y,z are only intermediate values, i.e., the uncertainties of NORMx,y,z does not effect the E^2-field uncertainty inside TSL (see below *ConvF*).
- *NORM(f)x,y,z = NORMx,y,z * frequency_response* (see Frequency Response Chart). This linearization is implemented in DASY4 software versions later than 4.2. The uncertainty of the frequency response is included in the stated uncertainty of *ConvF*.
- *DCPx,y,z:* DCP are numerical linearization parameters assessed based on the data of power sweep with CW signal (no uncertainty required). DCP does not depend on frequency nor media.
- *Ax,y,z; Bx,y,z; Cx,y,z, VRx,y,z: A, B, C* are numerical linearization parameters assessed based on the data of power sweep for specific modulation signal. The parameters do not depend on frequency nor media. *VR* is the maximum calibration range expressed in RMS voltage across the diode.
- *ConvF and Boundary Effect Parameters:* Assessed in flat phantom using E-field (or Temperature Transfer Standard for f ≤ 800 MHz) and inside waveguide using analytical field distributions based on power measurements for f > 800 MHz. The same setups are used for assessment of the parameters applied for boundary compensation (alpha, depth) of which typical uncertainty values are given. These parameters are used in DASY4 software to improve probe accuracy close to the boundary. The sensitivity in TSL corresponds to *NORMx,y,z * ConvF* whereby the uncertainty corresponds to that given for *ConvF*. A frequency dependent *ConvF* is used in DASY version 4.4 and higher which allows extending the validity from ± 50 MHz to ± 100 MHz.
- *Spherical isotropy (3D deviation from isotropy)*: in a field of low gradients realized using a flat phantom exposed by a patch antenna.
- *Sensor Offset*: The sensor offset corresponds to the offset of virtual measurement center from the probe tip (on probe axis). No tolerance required.

ES3DV3 SN:3161 March 22, 2010

Probe ES3DV3

SN:3161

Manufactured:	October 8, 2007
Last calibrated:	July 22, 2009
Recalibrated:	March 22, 2010

Calibrated for DASY Systems

(Note: non-compatible with DASY2 system!)

Certificate No: ES3-3161_Mar10 Page 3 of 11

ES3DV3 SN:3161 March 22, 2010

DASY - Parameters of Probe: ES3DV3 SN:3161

Basic Calibration Parameters

	Sensor X	Sensor Y	Sensor Z	Unc (k=2)
Norm (μV/(V/m)^2)[A]	1.11	1.27	1.21	± 10.1%
DCP (mV)[B]	89.6	92.5	91.0	

Modulation Calibration Parameters

UID	Communication System Name	PAR		A dB	B dBuV	C	VR mV	Unc[E] (k=2)
10000	CW	0.00	X	0.00	0.00	1.00	300.0	± 1.5%
			Y	0.00	0.00	1.00	300.0	
			Z	0.00	0.00	1.00	300.0	

The reported uncertainty of measurement is stated as the standard uncertainty of measurement multiplied by the coverage factor k=2, which for a normal distribution corresponds to a coverage probability of approximately 95%.

[A] The uncertainties of NormX,Y,Z do not affect the E^2-field uncertainty inside TSL (see Pages 5 and 6).

[B] Numerical linearization parameter: uncertainty not required.

[E] Uncertainty is determined using the maximum deviation from linear response applying recatangular distribution and is expressed for the square of the field value.

ES3DV3 SN:3161 March 22, 2010

DASY - Parameters of Probe: ES3DV3 SN:3161

Calibration Parameter Determined in Head Tissue Simulating Media

f [MHz]	Validity [MHz][C]	Permittivity	Conductivity	ConvF X	ConvF Y	ConvF Z	Alpha	Depth	Unc (k=2)
450	± 50 / ± 100	43.5 ± 5%	0.87 ± 5%	6.23	6.23	6.23	0.24	1.47	± 13.3%
835	± 50 / ± 100	41.5 ± 5%	0.90 ± 5%	5.96	5.96	5.96	0.82	1.12	± 11.0%
900	± 50 / ± 100	41.5 ± 5%	0.97 ± 5%	5.82	5.82	5.82	0.74	1.17	± 11.0%
1750	± 50 / ± 100	40.1 ± 5%	1.37 ± 5%	4.97	4.97	4.97	0.40	1.69	± 11.0%
1900	± 50 / ± 100	40.0 ± 5%	1.40 ± 5%	4.79	4.79	4.79	0.42	1.63	± 11.0%
1950	± 50 / ± 100	40.0 ± 5%	1.40 ± 5%	4.67	4.67	4.67	0.37	1.79	± 11.0%
2300	± 50 / ± 100	39.5 ± 5%	1.67 ± 5%	4.54	4.54	4.54	0.34	2.02	± 11.0%
2450	± 50 / ± 100	39.2 ± 5%	1.80 ± 5%	4.26	4.26	4.26	0.39	1.91	± 11.0%
2600	± 50 / ± 100	39.0 ± 5%	1.96 ± 5%	4.22	4.22	4.22	0.53	1.57	± 11.0%

[C] The validity of ± 100 MHz only applies for DASY v4.4 and higher (see Page 2). The uncertainty is the RSS of the ConvF uncertainty at calibration frequency and the uncertainty for the indicated frequency band.

Certificate No: ES3-3161_Mar10 Page 5 of 11

ES3DV3 SN:3161 March 22, 2010

DASY - Parameters of Probe: ES3DV3 SN:3161

Calibration Parameter Determined in Body Tissue Simulating Media

f [MHz]	Validity [MHz][C]	Permittivity	Conductivity	ConvF X	ConvF Y	ConvF Z	Alpha	Depth	Unc (k=2)
450	± 50 / ± 100	56.7 ± 5%	0.94 ± 5%	6.69	6.69	6.69	0.15	1.27	± 13.3%
835	± 50 / ± 100	55.2 ± 5%	0.97 ± 5%	5.84	5.84	5.84	0.70	1.23	± 11.0%
1750	± 50 / ± 100	53.4 ± 5%	1.49 ± 5%	4.74	4.74	4.74	0.34	2.11	± 11.0%
1900	± 50 / ± 100	53.3 ± 5%	1.52 ± 5%	4.52	4.52	4.52	0.31	2.37	± 11.0%
1950	± 50 / ± 100	53.3 ± 5%	1.52 ± 5%	4.64	4.64	4.64	0.35	2.18	± 11.0%
2300	± 50 / ± 100	52.8 ± 5%	1.85 ± 5%	4.35	4.35	4.35	0.41	1.83	± 11.0%
2450	± 50 / ± 100	52.7 ± 5%	1.95 ± 5%	4.17	4.17	4.17	0.77	1.17	± 11.0%
2600	± 50 / ± 100	52.5 ± 5%	2.16 ± 5%	4.07	4.07	4.07	0.82	1.20	± 11.0%

[C] The validity of ± 100 MHz only applies for DASY v4.4 and higher (see Page 2). The uncertainty is the RSS of the ConvF uncertainty at calibration frequency and the uncertainty for the indicated frequency band.

Certificate No: ES3-3161_Mar10 Page 6 of 11

ES3DV3 SN:3161 March 22, 2010

Frequency Response of E-Field

(TEM-Cell:ifi110 EXX, Waveguide: R22)

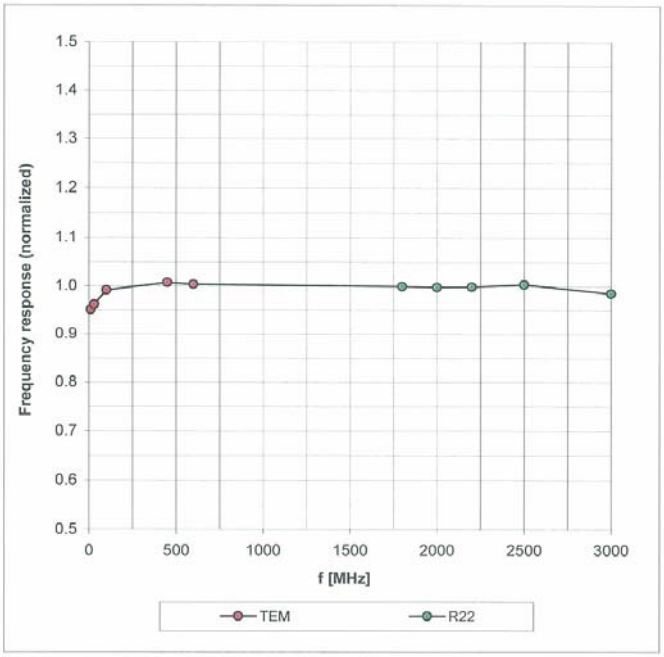

Uncertainty of Frequency Response of E-field: ± 6.3% (k=2)

Certificate No: ES3-3161_Mar10 Page 7 of 11

ES3DV3 SN:3161 March 22, 2010

Receiving Pattern (ϕ), ϑ = 0°

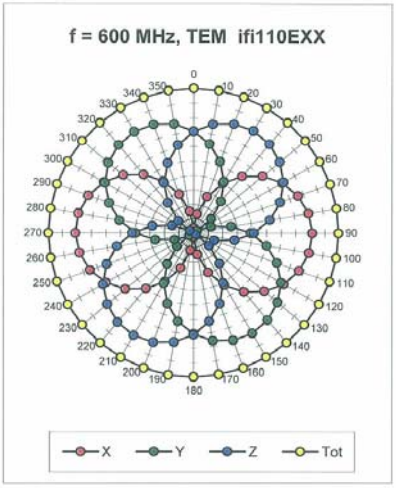

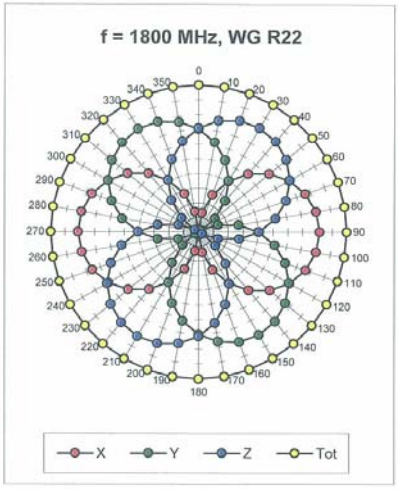

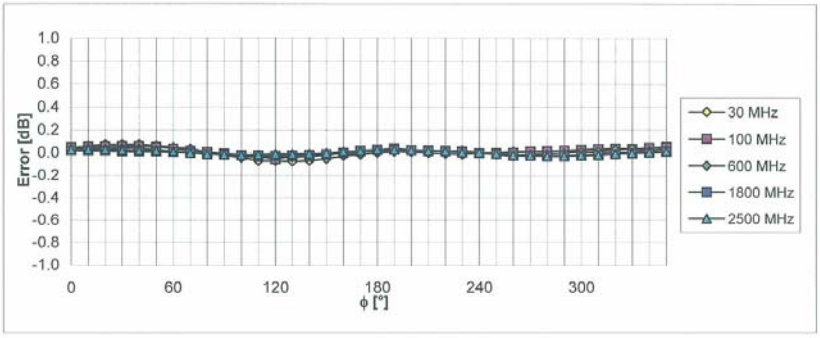

Uncertainty of Axial Isotropy Assessment: ± 0.5% (k=2)

Certificate No: ES3-3161_Mar10 Page 8 of 11

ES3DV3 SN:3161 March 22, 2010

Dynamic Range f(SAR_{head})

(Waveguide R22, f = 1800 MHz)

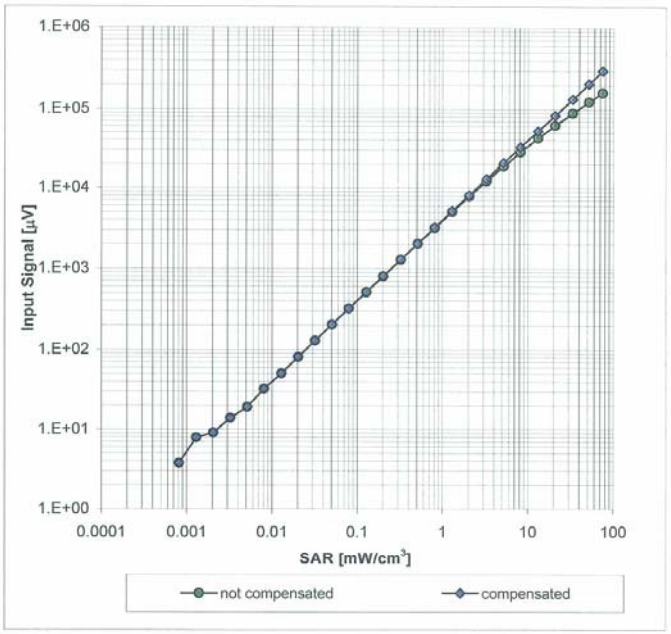

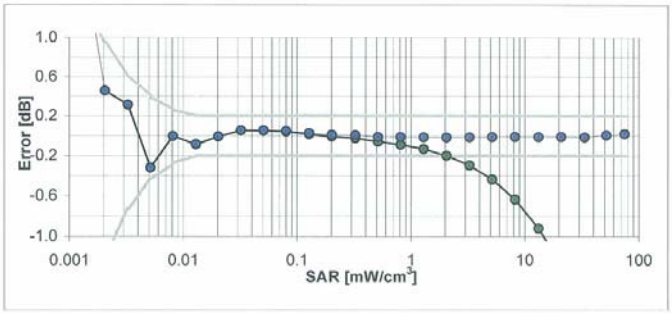

Uncertainty of Linearity Assessment: ± 0.6% (k=2)

Certificate No: ES3-3161_Mar10 Page 9 of 11

ES3DV3 SN:3161 March 22, 2010

Conversion Factor Assessment

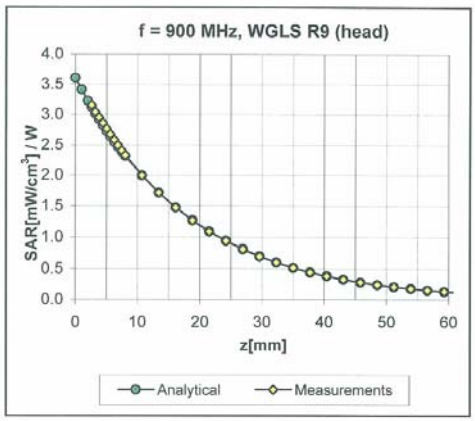

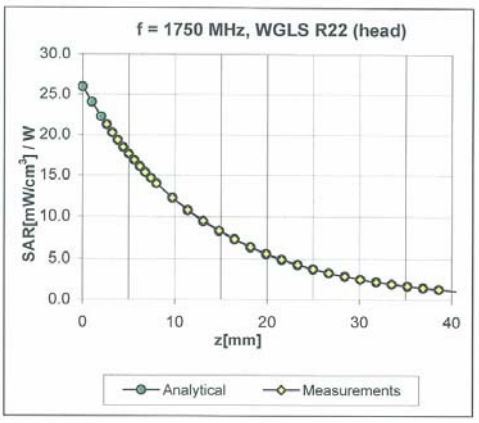

Deviation from Isotropy in HSL

Error (ϕ, ϑ), f = 900 MHz

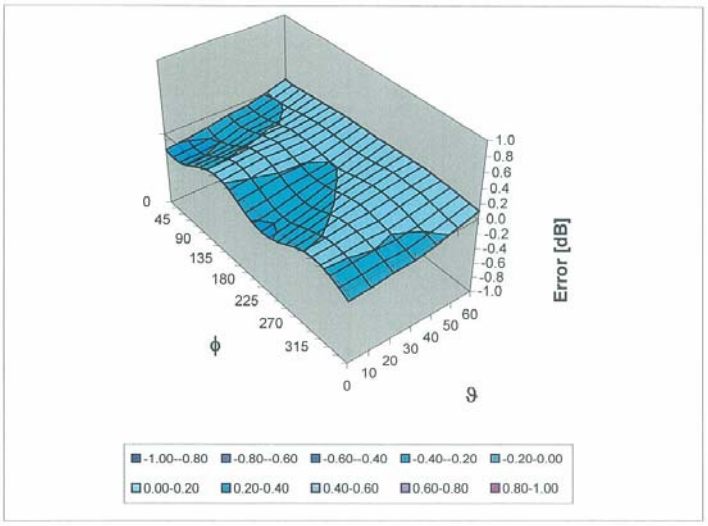

Uncertainty of Spherical Isotropy Assessment: ± 2.6% (k=2)

Certificate No: ES3-3161_Mar10 Page 10 of 11

ES3DV3 SN:3161 March 22, 2010

Other Probe Parameters

Sensor Arrangement	Triangular
Connector Angle (°)	Not applicable
Mechanical Surface Detection Mode	enabled
Optical Surface Detection Mode	disabled
Probe Overall Length	337 mm
Probe Body Diameter	10 mm
Tip Length	10 mm
Tip Diameter	4.0 mm
Probe Tip to Sensor X Calibration Point	2 mm
Probe Tip to Sensor Y Calibration Point	2 mm
Probe Tip to Sensor Z Calibration Point	2 mm
Recommended Measurement Distance from Surface	3 mm

Certificate No: ES3-3161_Mar10 Page 11 of 11

Schmid & Partner Engineering AG

s p e a g

Zeughausstrasse 43, 8004 Zurich, Switzerland
Phone +41 44 245 9700, Fax +41 44 245 9779
info@speag.com, http://www.speag.com

Dosimetric E-Field Probe ES3DV3 - SN:3161

Conversion factor (± standard deviation)

1500 ± 50 MHz	*ConvF*	**5.20 ± 7%**	ε_r = **40.4 ± 5%** σ = **1.23 ± 5% mho/m** (head tissue)

Important Note:

For numerically assessed probe conversion factors, parameters Alpha and Delta in the DASY software must have the following entries: Alpha = 0 and Delta = 1.

Please see also DASY Manual.

Schmid & Partner Engineering AG

s p e a g

Zeughausstrasse 43, 8004 Zurich, Switzerland
Phone +41 44 245 9700, Fax +41 44 245 9779
info@speag.com, http://www.speag.com

Additional Conversion Factors

for Dosimetric E-Field Probe

Type:	**ES3DV3**
Serial Number:	**3161**
Place of Assessment:	**Zurich**
Date of Assessment:	**May 3, 2010**
Probe Calibration Date:	**March 22, 2010**

Schmid & Partner Engineering AG hereby certifies that conversion factor(s) of this probe have been evaluated on the date indicated above. The assessment was performed using the FDTD numerical code SEMCAD of Schmid & Partner Engineering AG. Since the evaluation is coupled with measured conversion factors, it has to be recalculated yearly, i.e., following the re-calibration schedule of the probe. The uncertainty of the numerical assessment is based on the extrapolation from measured value at 900 MHz or at 1750 MHz.

Assessed by:

Attachment 4. – Dipole Calibration Data